Repair Manual

Audi Q7 2016 ➢

6-Cylinder TDI Common Rail 3.0L 4V Engine (EA 897 Gen I)									
Engine ID	CUE A	DDE A							

Edition 06.2016

Protected by copyright. Copying for private or commercial purposes, in part or in whole, is not permitted unless authorised by AUDI AG. AUDI AG does not guarantee or accept any liability with respect to the correctness of information in this document. Copyright by AUDI AG.

cardiagn.com

List of Workshop Manual Repair Groups

Repair Group

00 - General, Technical Data
10 - Engine Assembly
13 - Crankshaft, Cylinder Block
15 - Cylinder Head, Valvetrain
17 - Lubrication
19 - Cooling System
21 - Turbocharger, Supercharger
23 - Diesel Fuel Injection
26 - Exhaust System, Emission Controls
28 - Ignition/Glow Plug System
93 - Electric Drive

cardiagn.com

Protected by copyright. Copying for private or commercial purposes, in part or in whole, is not permitted unless authorised by AUDI AG. AUDI AG does not guarantee or accept any liability with respect to the correctness of information in this document. Copyright by AUDI AG.

Technical information should always be available to the foremen and mechanics, because their careful and constant adherence to the instructions is essential to ensure vehicle road-worthiness and safety. In addition, the normal basic safety precautions for working on motor vehicles must, as a matter of course, be observed.

All rights reserved.
No reproduction without prior agreement from publisher.

Copyright © 2016 Audi AG, Ingolstadt

Contents

00 - General, Technical Data 1

1 Identification 1

2 Safety Precautions 2

2.1 Safety Precautions when Working on the High-Voltage System 2

2.2 Safety Precautions when Working near High-Voltage Components 2

2.3 Safety Precautions for All Vehicles 3

3 Repair Information 4

3.1 Paint Work, Vehicles with High-Voltage System 4

3.2 Repair Information for All Vehicles 4

4 High-Voltage System Danger Classification 5

4.1 Necessary Qualifications 5

4.2 Procedures Requiring System to be De-Energized 5

10 - Engine Assembly 8

1 Engine, Removing and Installing 8

1.1 Engine, Removing 8

1.2 Engine and Transmission, Separating 39

1.3 Engine, Securing to Engine and Transmission Holder 47

1.4 Engine, Installing 50

2 Subframe Mount 61

2.1 Overview - Subframe Mount 61

2.2 Engine, Supporting in Installation Position 65

2.3 Engine Mount, Removing and Installing 66

2.4 Subframe Mount Sensor, Removing and Installing 71

2.5 Transmission Mount, Removing and Installing 72

3 Engine Cover 77

3.1 Engine Cover, Removing and Installing 77

4 Special Tools 80

13 - Crankshaft, Cylinder Block 86

1 Cylinder Block, Belt Pulley Side 86

1.1 Overview - Cylinder Block, Belt Pulley Side 86

1.2 Overview - Belt Pulley Side Sealing Flange 91

1.3 Ribbed Belt, Removing and Installing 92

1.4 Ribbed Belt Tensioner, Removing and Installing 93

1.5 Vibration Damper, Removing and Installing 94

1.6 Sub-Assembly Bracket, Removing and Installing 94

1.7 Engine Support, Removing and Installing 94

1.8 Belt Pulley, Removing and Installing 95

1.9 Crankshaft Seal, Replacing, Belt Pulley Side 96

1.10 Sealing Flange, Removing and Installing, Belt Pulley Side 96

2 Cylinder Block, Transmission Side 98

3 Crankshaft 99

4 Balance Shaft 100

5 Pistons and Connecting Rod 101

6 Special Tools 102

15 - Cylinder Head, Valvetrain 103

1 Timing Chain Cover 103

1.1 Overview - Timing Chain Cover 103

1.2 Timing Chain Cover, Removing and Installing 105

Protected by copyright. Copying for private or commercial purposes, in part or in whole, is not permitted unless authorised by AUDI AG. AUDI AG does not guarantee or accept any liability with respect to the correctness of information in this document. Copyright by AUDI AG.

cardiagn.com

2 **Chain Drive** . . . 107
3 **Cylinder Head** . . . 108
3.1 Overview - Cylinder Head . . . 108
3.2 Overview - Cylinder Head Cover . . . 110
3.3 Cylinder Head, Removing and Installing . . . 111
3.4 Cylinder Head Cover, Removing and Installing . . . 112
3.5 Fuel Injector Seals, Removing and Installing . . . 112
3.6 Compression, Checking . . . 113
4 **Valvetrain** . . . 114
5 **Intake and Exhaust Valves** . . . 115
6 **Special Tools** . . . 116

17 - Lubrication . . . 117
1 **Oil Pan/Oil Pump** . . . 117
1.1 Overview - Oil Pan/Oil Pump . . . 117
1.2 Engine Oil . . . 120
1.3 Oil Pan Lower Section, Removing and Installing . . . 120
1.4 Oil Pan Upper Section, Removing and Installing . . . 120
1.5 Oil Pump, Removing and Installing . . . 120
1.6 Oil Level Thermal Sensor G266 , Removing and Installing . . . 120
2 **Engine Oil Cooler** . . . 121
3 **Oil Filter/Oil Pressure Switch** . . . 122
3.1 Overview - Oil Filter . . . 122
3.2 Oil Pressure Sensor G10 , Removing and Installing . . . 123
3.3 Oil Pressure, Checking . . . 124
3.4 Oil Filter Housing, Removing and Installing . . . 124
3.5 Oil Pressure Regulation Valve N428 , Removing and Installing . . . 124
3.6 Oil Temperature Sensor 2 G664 , Removing and Installing . . . 125
4 **Special Tools** . . . 126

19 - Cooling System . . . 127
1 **Coolant System/Coolant** . . . 127
1.1 Connection Diagram - Coolant Hoses . . . 127
1.2 Cooling System, Checking for Leaks . . . 134
1.3 Coolant, Draining and Filling . . . 140
2 **Coolant Pump/Coolant Thermostat** . . . 151
2.1 Overview - Coolant Pump . . . 151
2.2 Overview - Electric Coolant Pump . . . 153
2.3 Overview - Coolant Thermostat . . . 155
2.4 Overview - Coolant Valve . . . 158
2.5 Overview - Engine Coolant Temperature Sensor . . . 160
2.6 Electric Coolant Pump, Removing and Installing . . . 163
2.7 Coolant Pump, Removing and Installing . . . 166
2.8 Map Controlled Engine Cooling Thermostat F265 , Removing and Installing . . . 166
2.9 Engine Coolant Temperature Sensor G62 , Removing and Installing . . . 166
2.10 Engine Temperature Control Temperature Sensor G694 , Removing and Installing . . . 166
2.11 Coolant Temperature Sensor 2 G802 , Removing and Installing . . . 167
2.12 High-Voltage System Engine Coolant Temperature Sensor, Removing and Installing . . . 167
2.13 Coolant Valves, Removing and Installing . . . 173
3 **Coolant Pipes** . . . 180
3.1 Overview - Coolant Pipes . . . 180
3.2 Coolant Pipes, Removing and Installing . . . 182
4 **Radiator/Radiator Fan** . . . 188
4.1 Overview - Radiator/Radiator Fan . . . 188

Protected by copyright. Copying for private or commercial purposes, in part or in whole, is not permitted unless authorised by AUDI AG. AUDI AG does not guarantee or accept any liability with respect to the correctness of information in this document. Copyright by AUDI AG.

cardiagn.com

4.2 Radiator, Removing and Installing . . . 191
4.3 Fan Shroud, Removing and Installing . . . 195
4.4 Radiator Fan, Removing and Installing . . . 199
4.5 Radiator Shutter, Removing and Installing . . . 199
4.6 Radiator Shutter Motor, Removing and Installing . . . 201
4.7 Radiator for High-Voltage System Coolant Circuit, Removing and Installing . . . 202
5 Special Tools . . . 204

21 - Turbocharger, Supercharger . . . 206
1 Turbocharger . . . 206
1.1 Overview - Turbocharger . . . 206
1.2 Turbocharger, Removing and Installing . . . 208
2 Charge Air System . . . 209
2.1 Overview - Charge Air System . . . 209
2.2 Overview - Charge Air Hose Connections . . . 212
2.3 Charge Air Cooler, Removing and Installing . . . 212
2.4 Charge Air Pressure Sensor G31 , Removing and Installing . . . 216
2.5 Charge Air System, Checking for Leaks . . . 216
3 Special Tools . . . 218

23 - Diesel Fuel Injection . . . 219
1 Injection System . . . 219
1.1 Schematic Overview - Fuel System . . . 219
1.2 Component Location Overview - Injection System . . . 220
1.3 Fuel System, Filling/Bleeding . . . 225
1.4 Fuel System Leak Test . . . 225
2 Vacuum System . . . 226
2.1 Connection Diagram - Vacuum System . . . 226
2.2 Vacuum System, Checking . . . 227
3 Air Filter . . . 228
3.1 Overview - Air Filter Housing . . . 228
3.2 Air Filter Housing, Removing and Installing . . . 229
4 Intake Manifold . . . 231
4.1 Overview - Intake Manifold . . . 231
4.2 Intake Manifold Upper Section, Removing and Installing . . . 233
4.3 Intake Manifold Lower Section, Removing and Installing . . . 234
4.4 Intake Flap Motor V157 , Removing and Installing . . . 234
4.5 Throttle Valve Control Module J338 , Removing and Installing . . . 234
5 Fuel Injectors/High Pressure Reservoir (Rail) . . . 235
5.1 Overview - Fuel Injectors . . . 235
5.2 Fuel Injectors, Checking . . . 236
5.3 Fuel Injectors, Adapting Correction Values . . . 236
5.4 Open Fuel Injectors, Checking . . . 237
5.5 Fuel Injectors, Checking Return Quantity with Engine Running . . . 237
5.6 Fuel Injectors, Checking Return Quantity at Cranking Speed . . . 237
5.7 Fuel Return Line Restrictor, Checking . . . 237
5.8 Fuel Injectors, Removing and Installing . . . 238
5.9 High Pressure Lines, Removing and Installing . . . 239
5.10 High Pressure Reservoir (Rail), Removing and Installing . . . 239
6 Sensors . . . 240
6.1 Intake Air Temperature Sensor G42 , Removing and Installing . . . 240
6.2 Mass Airflow Sensor G70 , Removing and Installing . . . 241
6.3 Fuel Temperature Sensor G81 , Removing and Installing . . . 242
6.4 Fuel Pressure Sensor G247 , Removing and Installing . . . 242

Protected by copyright. Copying for private or commercial purposes, in part or in whole, is not permitted unless authorized by AUDI AG. AUDI AG does not guarantee or accept any liability with respect to the correctness of information in this document. Copyright by AUDI AG.

cardiagn.com

6.5 Low Fuel Pressure Sensor G410 , Removing and Installing . . . 242
6.6 Differential Pressure Sensor G505 , Removing and Installing . . . 243
6.7 Fuel Pressure Regulator Valve N276 , Checking . . . 243
6.8 Fuel Pressure Regulator Valve N276 , Removing and Installing . . . 245
7 High Pressure Pump . . . 246
8 Heated Oxygen Sensor . . . 247
8.1 Overview - Heated Oxygen Sensor . . . 247
8.2 Heated Oxygen Sensor, Removing and Installing . . . 249
8.3 NOx Sensor, Removing and Installing . . . 249
8.4 Particulate Sensor G784 , Removing and Installing . . . 251
9 Engine Control Module . . . 253
9.1 Overview - Engine Control Module . . . 253
9.2 Engine Control Module J623 , Removing and Installing . . . 253
10 Special Tools . . . 255

26 - Exhaust System, Emission Controls . . . 256

1 Exhaust Pipes/Mufflers . . . 256
1.1 Overview - Muffler . . . 256
1.2 Front Exhaust Pipe, Removing and Installing . . . 259
1.3 Muffler, Removing and Installing . . . 263
1.4 Exhaust System, Installing without Tension . . . 264
1.5 Exhaust System, Checking for Leaks . . . 265
2 Emissions Control System . . . 266
2.1 Overview - Emissions Control System . . . 266
2.2 Emissions Control Module, Removing and Installing . . . 268
2.3 Catalytic Converter, Removing and Installing . . . 271
2.4 Exhaust Door Control Unit J883 , Removing and Installing . . . 273
3 Selective Catalytic Reduction System . . . 274
3.1 Overview - Reducing Agent Tank . . . 274
3.2 Overview - Reducing Agent Delivery Line . . . 275
3.3 Overview - Reducing Agent Metering System Control Module J880 . . . 276
3.4 Reducing Agent Tank, Draining . . . 276
3.5 Reducing Agent Tank, Removing and Installing . . . 277
3.6 Reducing Agent Injector N474 , Removing and Installing . . . 279
3.7 Reducing Agent Metering System Control Module J880 , Removing and Installing . . . 279
3.8 Reducing Agent Quality Sensor G849 , Removing and Installing . . . 280
4 Exhaust Temperature Regulation . . . 281
4.1 Overview - Exhaust Temperature Regulation . . . 281
4.2 Exhaust Gas Temperature Sensor, Removing and Installing . . . 282
4.3 Catalyst Temperature Sensor 1 G20 , Removing and Installing . . . 284
5 Exhaust Gas Recirculation (EGR) . . . 286
5.1 Overview - Exhaust Gas Recirculation (EGR) . . . 286
5.2 EGR Cooler, Removing and Installing . . . 289
5.3 EGR Temperature Sensor G98 , Removing and Installing . . . 289
6 Exhaust Manifold . . . 291
6.1 Overview - Exhaust Manifold . . . 291
6.2 Exhaust Manifold, Removing and Installing . . . 292
7 Special Tools . . . 297

28 - Ignition/Glow Plug System . . . 298

1 Glow Plug System . . . 298
1.1 Overview - Glow Plug System . . . 298
1.2 Glow Plug, Removing and Installing . . . 299
1.3 Camshaft Position Sensor G40 , Removing and Installing . . . 300

Protected by copyright. Copying for private or commercial purposes, in part or in whole, is not permitted unless authorised by AUDI AG. AUDI AG does not guarantee or accept any liability with respect to the correctness of information in this document. Copyright by AUDI AG.
cardiagn.com

1.4 Engine Speed Sensor G28 , Removing and Installing 300

93 - Electric Drive 301

1 High-Voltage Components 301
1.1 Component Location Overview - High-Voltage Components 301
2 Warning Label 304
2.1 Warning Label, Checking 304
3 High-Voltage Battery Unit 308
3.1 Overview - High-Voltage Battery 308
3.2 Hybrid Battery Unit AX1 , Visual Inspection 311
3.3 Hybrid Battery Unit AX1 , Removing and Installing 312
3.4 Battery Regulation Control Module J840 , Removing and Installing 318
3.5 High-Voltage Battery Switch Box SX6 , Removing and Installing 318
4 Electric Drive Power and Control Electronics 320
4.1 Component Location Overview - Electric Drive Power and Control Electronics 320
4.2 Electric Drive Power and Control Electronics, Removing and Installing 323
4.3 Electric Drive Power and Control Electronics JX1 , Removing and Installing 325
5 Electric Drive Motor 327
5.1 Overview - Electric Drive Motor 327
5.2 Three-Phase Current Drive VX54 , Removing and Installing 330
5.3 Centering Bracket, Removing and Installing 335
5.4 Drive Motor Temperature Sensor G712 , Removing and Installing 336
5.5 Drive Motor Rotor Position Sensor 1 G713 , Removing and Installing 336
5.6 Torsion Damper, Removing and Installing 337
5.7 Decoupler Actuator V606 , Removing and Installing 339
5.8 Coolant Connection, Removing and Installing 340
5.9 Three-Phase Current Drive, Transporting 340
6 High-Voltage Cables 342
6.1 Component Location Overview - High-Voltage Cables 342
6.2 High-Voltage Wiring Harness for High-Voltage Battery, Removing and Installing 347
6.3 Drive Motor High-Voltage Wiring Harness, Removing and Installing 352
6.4 Electrical A/C Compressor High-Voltage Cable, Removing and Installing 356
6.5 High-Voltage Cable for High-Voltage Heater (PTC), Removing and Installing 358
7 High-Voltage System, De-Energizing 364
8 High-Voltage System, Re-Energizing 366
9 Potential Equalization Cables 368
9.1 General Information - Potential Equalization Cable 368
9.2 Component Location Overview - Potential Equalization Cables 368
9.3 Potential Equalization Cable, Removing and Installing 369
10 Charging Socket 373
10.1 Overview - Charging Socket 373
10.2 e-tron Charging System 374
10.3 USB Adapter for e-tron Charging System 374
10.4 High-Voltage Battery Charging Socket 1 UX4 , Removing and Installing 375
10.5 Battery Charging Button Module EX32 , Removing and Installing 378
11 High-Voltage Battery Charger 380
11.1 Overview - High-Voltage Battery Charger 380
11.2 High-Voltage Battery Charger 1 AX4 , Removing and Installing 381
11.3 High-Voltage Battery Charger 1 AX4 Bracket, Removing and Installing 383
12 Special Tools 384
13 Revision History 391

Protected by copyright. Copying for private or commercial purposes, in any form and by any media, is not permitted unless authorised by AUDI AG. AUDI AG does not guarantee or accept any liability with respect to the correctness and completeness of this document. Copyright by AUDI AG.

cardiagn.com

cardiagn.com

Protected by copyright. Copying for private or commercial purposes, in part or in whole, is not permitted unless authorised by AUDI AG. AUDI AG does not guarantee or accept any liability with respect to the correctness of information in this document. Copyright by AUDI AG.

00 – General, Technical Data

1 Identification

(Edition 06.2016)

All information is described. Refer to ⇒ Servicing – 6-Cylinder TDI Common Rail Engine ; Rep. Gr. 00 ; Identification .

Protected by copyright. Copying for private or commercial purposes, in part or in whole, is not permitted unless authorised by AUDI AG. AUDI AG does not guarantee or accept any liability with respect to the correctness of information in this document. Copyright by AUDI AG.

cardiagn.com

2 Safety Precautions

⇒ “2.1 Safety Precautions when Working on the High-Voltage System”, page 2

⇒ “2.2 Safety Precautions when Working near High-Voltage Components”, page 2

⇒ “2.3 Safety Precautions for All Vehicles”, page 3

2.1 Safety Precautions when Working on the High-Voltage System

High Voltage is Extremely Dangerous.

The high-voltage system is under high voltage. Electrocution can cause death or very serious personal injury.

- Individuals with electronic/medical life and health sustaining machines in or on their person cannot perform any work on high-voltage systems. Life and health sustaining machines are for example pain killer pumps, implanted defibrillators, pacemakers, insulin pumps, and hearing aids.
- Have the high-voltage system de-energized by a qualified person.

There Is a Risk of Injury Due to the Engine Starting Unexpectedly.

On electric and hybrid vehicles an active ready mode is difficult to identify. Parts of the body can be pinched or pulled.

- Switch off the ignition.
- Place the ignition key outside of the vehicle interior.

Risk of Damaging the High-Voltage Cables.

Misuse can damage the insulation of high-voltage cables or high-voltage connectors.

- Never support objects on the high-voltage cables and the high-voltage connectors.
- Never support tools on the high-voltage cables and the high-voltage connectors.
- Never sharply bend or kink the high-voltage cables.
- When connecting pay attention to the coding of the high-voltage connectors.

2.2 Safety Precautions when Working near High-Voltage Components

High Voltage Is Extremely Dangerous.

The high-voltage system is under high voltage. Electrocution can cause death or very serious personal injury from damaged high-voltage components and high-voltage cables.

- Perform a visual inspection of the high-voltage components and the high-voltage cables.
- Never use tools that are for cutting, deformed, or sharp edged.
- Never weld, solder or use thermal adhesive or hot air.

Protected by copyright. Copying for private or commercial purposes, in part or in whole, is not permitted unless authorised by AUDI AG. AUDI AG does not guarantee or accept any liability with respect to the correctness of information in this document. Copyright by AUDI AG.

cardiagn.com

2.3 Safety Precautions for All Vehicles

All information is described. Refer to ⇒ Servicing – 6-Cylinder TDI Common Rail Engine ; Rep. Gr. 00 ; Safety Instructions .

Protected by copyright. Copying for private or commercial purposes, in part or in whole, is not permitted unless authorised by AUDI AG. AUDI AG does not guarantee or accept any liability with respect to the correctness of information in this document. Copyright by AUDI AG.

cardiagn.com

3 Repair Information

⇒ “3.1 Paint Work, Vehicles with High-Voltage System”, page 4

⇒ “3.2 Repair Information for All Vehicles”, page 4

3.1 Paint Work, Vehicles with High-Voltage System

Protected by copyright. Copying for private or commercial purposes, in part or in whole, is not permitted unless authorized by AUDI AG. AUDI AG does not guarantee or accept any liability with respect to the correctness of information in this document. Copyright by AUDI AG.

Object temperatures must not exceed 55 °C (131 °F) in the drying oven or preheating zone during paint repairs. Refer to Audi Paint Manual; Hybrid/High-Voltage Vehicle Paint Repairs.

3.2 Repair Information for All Vehicles

All information is described. Refer to ⇒ Servicing – 6-Cylinder TDI Common Rail Engine ; Rep. Gr. 00 ; Repair Information .

cardiagn.com

4 High-Voltage System Danger Classification

⇒ “4.1 Necessary Qualifications”, page 5

⇒ “4.2 Procedures Requiring System to be De-Energized”, page 5

4.1 Necessary Qualifications

Different qualifications are required to perform the various procedures near or directly on the high-voltage components. Refer to ⇒ High-Voltage Vehicle General Information; Rep. Gr. 00 ; Internal/External Personnel Qualification .

4.2 Procedures Requiring System to be De-Energized

– The high-voltage system must be de-energized for the following work procedures.

De-energizing the high-voltage system is done exclusively via the “Guided Fault Finding”. Refer to ⇒ “7 High-Voltage System, De-Energizing”, page 364 .

Component	Action	Qualification
Welding, lapping or separating procedures near high-voltage components	⇒ Body Repair; Rep. Gr. 00 ; Hybrid Vehicle Information	De-energizing by high-voltage technician, procedures after de-energizing by technician trained in electrical systems
Body work (with straightening rack)	⇒ Body Repair; Rep. Gr. 00 ; Straightening Rack	De-energizing by high-voltage technician, procedures after de-energizing by technician trained in electrical systems
Electric Drive Power and Control Electronics - JX1-	Electric Drive Power and Control Electronics, Removing and installing. Refer to ⇒ “4.2 Electric Drive Power and Control Electronics, Removing and Installing”, page 323 .	High-voltage technician
Hybrid Battery Unit - AX1-	Hybrid Battery Unit, Removing and installing. Refer to ⇒ “3.3 Hybrid Battery Unit AX1 , Removing and Installing”, page 312 .	High-voltage technician
High-Voltage Battery Charger 1 - AX4-	High-Voltage Battery Charger 1, Removing and installing. Refer to ⇒ “11.2 High-Voltage Battery Charger 1 AX4 , Removing and Installing”, page 381 .	High-voltage technician
High-Voltage Battery Charging Socket 1 - UX4-	High-Voltage Battery Charging Socket 1, Removing and installing. Refer to ⇒ “11.2 High-Voltage Battery Charger 1 AX4 , Removing and Installing”, page 381 .	High-voltage technician
High-Voltage Battery Charging Socket 1 - UX4- Bracket	Bracket for Charging Socket, Removing and installing. Refer to ⇒ “11.3 High-Voltage Battery Charger 1 AX4 Bracket, Removing and Installing”, page 383 .	High-voltage technician
Three-Phase Current Drive - VX54-	Three-Phase Current Drive - VX54- , Removing and installing. Refer to ⇒ “5.2 Three-Phase Current Drive VX54 , Removing and Installing”, page 330 .	High-voltage technician

Protected by copyright. Copying for private or commercial purposes, in part or in whole, is not permitted unless authorised by AUDI AG. AUDI AG does not guarantee or accept any liability with respect to the correctness and completeness of this document. Copyright by AUDI AG.

cardiagn.com

Component	Action	Qualification
Decoupler Actuator - V606-	Decoupler Actuator, Removing and installing. Refer to ⇒ “5.7 Decoupler Actuator V606 , Removing and Installing”, page 339 .	De-energizing by high-voltage technician, procedures after de-energizing by technician trained in electrical systems
Drive Motor Temperature Sensor - G712-	Drive Motor Temperature Sensor, Removing and installing. Refer to ⇒ “5.4 Drive Motor Temperature Sensor G712 , Removing and Installing”, page 336 .	De-energizing by high-voltage technician, procedures after de-energizing by technician trained in electrical systems
Electrical A/C Compressor - V470-	Electrical A/C Compressor, Removing and installing. Refer to ⇒ Heating, Ventilation and Air Conditioning; Rep. Gr. 87 ; A/C Compressor; A/C Compressor, Removing and Installing .	High-voltage technician
High-Voltage Heater (PTC) - Z115-	High-Voltage Heater (PTC), Removing and installing. Refer to ⇒ Heating, Ventilation and Air Conditioning; Rep. Gr. 87 ; Coolant Circuit ; High-Voltage Heater (PTC) - Z115- (with High-Voltage Heater (PTC) Control Module - J848-), Removing and installing.	High-voltage technician
High-Voltage Wiring Harness for High-Voltage Battery - PX1-	High-Voltage Wiring Harness for High-Voltage Battery, Removing and installing. Refer to ⇒ “6.2 High-Voltage Wiring Harness for High-Voltage Battery, Removing and Installing”, page 347 .	High-voltage technician
Drive Motor High-Voltage Wiring Harness - PX2-	Drive Motor High-Voltage Wiring Harness, Removing and installing. Refer to ⇒ “6.3 Drive Motor High-Voltage Wiring Harness, Removing and Installing”, page 352 .	High-voltage technician
Electrical A/C Compressor High-Voltage Cable - P3-	Electrical A/C Compressor High-Voltage Cable, Removing and installing. Refer to ⇒ “6.4 Electrical A/C Compressor High-Voltage Cable, Removing and Installing”, page 356 .	High-voltage technician
High-Voltage Cable for High-Voltage Battery Charger - P25-	High-Voltage Cable for High-Voltage Battery Charger, Removing and installing. Refer to ⇒ “10.4 High-Voltage Battery Charging Socket 1 UX4 , Removing and Installing”, page 375 .	High-voltage technician
High-Voltage Cable for High-Voltage Heater (PTC) - P11-	High-Voltage Cable for High-Voltage Heater (PTC), Removing and installing. Refer to ⇒ “6.5 High-Voltage Cable for High-Voltage Heater (PTC), Removing and Installing”, page 358 .	High-voltage technician
Transmission	Transmission removing and installing. Refer to ⇒ 8-Speed Automatic Transmission; Rep. Gr. 37 ; Transmission, Removing and Installing .	De-energizing by high-voltage technician, procedures after de-energizing by technician trained in electrical systems
Parking Lock Shaft Seal	Replacing the parking lock shaft seal. Refer to ⇒ 8-Speed Automatic Transmission; Rep. Gr. 37 ; Gearshift Mechanism; Parking Lock Shaft Seal, Replacing .	De-energizing by high-voltage technician, procedures after de-energizing by technician trained in electrical systems
Mechatronic	Mechatronic, removing and installing. Refer to ⇒ 8-Speed Automatic Transmission; Rep. Gr. 38 ; Mechatronic; Mechatronic, Removing and Installing .	De-energizing by high-voltage technician, procedures after de-energizing by technician trained in electrical systems

Protected by copyright. Copying for private or commercial purposes, in part or in whole, is not permitted unless authorised by AUDI AG. AUDI AG does not guarantee or accept any liability with respect to the correctness of information in this document. Copyright by AUDI AG.

cardiagn.com

Component	Action	Qualification
Left Transmission Mount	Left Transmission Mount, Removing and installing. Refer to ⇒ “2.5.5 Transmission Mount, Removing and Installing, Left Transmission Mount for Vehicles with High-Voltage System”, page 74 .	De-energizing by high-voltage technician, procedures after de-energizing by technician trained in electrical systems
Rear Tunnel Crossmember	Tunnel crossmember, removing and installing. Refer to ⇒ 8-Speed Automatic Transmission; Rep. Gr. 37 ; Subframe Mount; Overview - Subframe Mount; Tunnel Crossmember, Removing and Installing .	De-energizing by high-voltage technician, procedures after de-energizing by technician trained in electrical systems
Rear Transmission Mount	Transmission mount, removing and installing, transmission support with rear transmission mount, removing and installing. Refer to ⇒ “2.5.2 Transmission Mount, Removing and Installing, Transmission Support with Rear Transmission Mount for Vehicles with High-Voltage System”, page 73 .	De-energizing by high-voltage technician, procedures after de-energizing by technician trained in electrical systems
Transmission Fluid Pan	Transmission fluid pan, removing and installing. Refer to ⇒ 8-Speed Automatic Transmission; Rep. Gr. 38 ; ATF System; Transmission Fluid Pan, Removing and Installing .	De-energizing by high-voltage technician, procedures after de-energizing by technician trained in electrical systems
Accumulator Solenoid - N485-	Accumulator Solenoid, Removing and installing. Refer to ⇒ 8-Speed Automatic Transmission; Rep. Gr. 38 ; ATF System; Overview - ATF System .	De-energizing by high-voltage technician, procedures after de-energizing by technician trained in electrical systems
Entire Engine Removal (with Transmission)	Engine with Transmission, Removing and installing. Refer to ⇒ “1.1.2 Engine, Removing, Vehicle with High-Voltage System”, page 23 .	De-energizing by high-voltage technician, procedures after de-energizing by technician trained in electrical systems
Left Engine Support	Left Engine Support, Removing and installing. Refer to ⇒ “1.7 Engine Support, Removing and Installing”, page 94 .	De-energizing by high-voltage technician, procedures after de-energizing by technician trained in electrical systems

Protected by copyright. Copying for private or commercial purposes, in part or in whole, is not permitted unless authorised by AUDI AG. AUDI AG does not guarantee or accept any liability with respect to the correctness of information in this document. Copyright by AUDI AG.

cardiagn.com

10 – Engine Assembly

1 Engine, Removing and Installing

⇒ “1.1 Engine, Removing”, page 8

⇒ “1.2 Engine and Transmission, Separating”, page 39

⇒ “1.3 Engine, Securing to Engine and Transmission Holder”, page 47

⇒ “1.4 Engine, Installing”, page 50

1.1 Engine, Removing

⇒ “1.1.1 Engine, Removing, Vehicle without High-Voltage System”, page 8

⇒ “1.1.2 Engine, Removing, Vehicle with High-Voltage System”, page 23

1.1.1 Engine, Removing, Vehicle without High-Voltage System

Special tools and workshop equipment required

- Pry Lever - 80-200-
- Engine Bung Set - VAS6122-
- Scissor Lift Table - VAS6131B-
- Scissor Lift Table - Audi Set - VAS6131/10-
- Scissor Lift Table - Q7 Set - VAS6131/13-
- Coolant Collection System - VAS5014- or Shop Crane - Drip Tray - VAS6208-
- Hose Clip Pliers - VAS6362-
- Hose Clip Pliers - VAS6340-
- Wrench - 21mm - T40263-
- Valve Cotter Tool Kit - Adapter - T40314-
- Engine and Gearbox Bracket - VAS6095A-
- Commercially available Step Ladder

Protected by copyright. Copying for private or commercial purposes, in part or in whole, is not permitted unless authorised by AUDI AG. AUDI AG does not guarantee or accept any liability with respect to the correctness of information in this document. Copyright by AUDI AG.

Procedure

- With the lock carrier installed, the engine is removed downward with the transmission and subframe.
- The securing components for the wires must correspond to the production series. Refer to Parts Catalog.
- All bolts on suspension components with bonded rubber bushings must be tightened in curb weight position (no load).
- Bonded rubber bushings have a limited range of rotation. Axle components with bonded rubber bushings must be brought into the position they will be in when driving before they are tightened (curb weight position). Otherwise, the bonded rubber bushing will be under stress, which will reduce the service life.

– Before starting the procedures, determine the curb weight position (refer to ⇒ Suspension, Wheels, Steering; Rep. Gr. 00 ; Repair Information; Wheel Bearing in Curb Weight, Lifting Vehicles with Coil Spring or determine the control position (refer to ⇒ Suspension, Wheels, Steering; Rep. Gr. 00 ; Repair

cardiagn.com

Information; Wheel Bearing in Control Position, Lifting Vehicles with Air Suspension).

– Position the front wheels so they are straight.

• The electro-mechanical parking brake must be released before disconnecting battery so the driveshaft can be rotated to remove it.

• When on the removed engine the turbocharger is to be removed, for this the Turbocharger Control Module 1 - J724- must be brought into the “closed” position using the Vehicle Diagnostic Tester . Refer to ⇒ Servicing – 6-Cylinder TDI Common Rail Engine; Rep. Gr. 21 ; Turbocharger; Turbocharger, Removing and Installing .

– Disconnect the ground cable from the battery terminal. Refer to ⇒ Electrical Equipment; Rep. Gr. 27 ; Battery; Battery, Disconnecting and Connecting .

⚠ CAUTION

The cooling system is under pressure when the engine is warm. Risk of scalding due to hot steam and hot coolant.

Scalding the skin and other parts of the body is possible.

– Wear safety gloves.

– Wear protective eyewear.

– Reduce the pressure by covering the coolant expansion tank cap with a cloth and carefully opening it.

– Open the coolant expansion tank cap -1- by releasing the catch in direction of -arrow-.

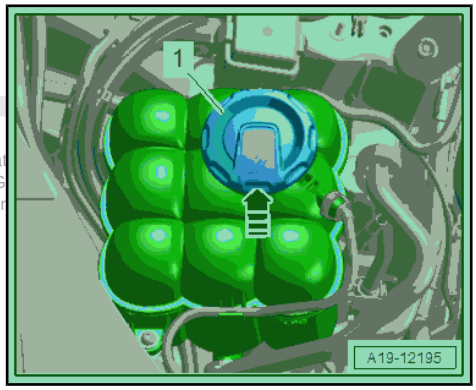

– Remove the front wheels. Refer to ⇒ Suspension, Wheels, Steering; Rep. Gr. 44 ; Wheels, Tires .

– Remove the left and right wheel housing liner front sections. Refer to ⇒ Body Exterior; Rep. Gr. 66 ; Wheel Housing Liner; Front Wheel Housing Liner, Removing and Installing .

– Remove the noise insulation. Refer to ⇒ Body Exterior; Rep. Gr. 66 ; Noise Insulation; Noise Insulation, Removing and Installing .

– Remove the left and right lower longitudinal members. Refer to ⇒ Body Exterior; Rep. Gr. 50 ; Lock Carrier; Overview - Lock Carrier .

– Remove the driveshaft. Refer to ⇒ Rear Final Drive; Rep. Gr. 39 ; Driveshaft; Driveshaft, Removing and Installing .

– Place the container of the -VAS5014- or the -VAS6208- underneath.

– Lift the clamp -arrow- and remove the coolant hose from the radiator and drain the coolant.

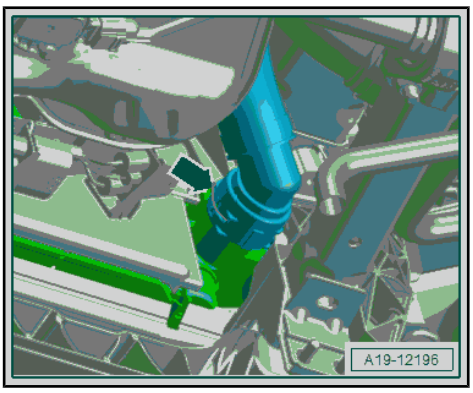

Protected by copyright. Copying for private
limited unless authorised by AUDI AG
with respect to the correctness of infor
cardiagn.com

– Lift the clamp -arrow- and remove the right rear coolant hose.
– Hold the coolant hose downward and allow the coolant to drain.

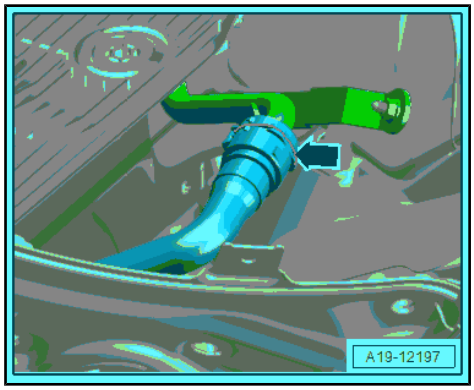

– Open the left and right clip in the direction of -arrow B-.
– Remove the air filter upper section -1- in the center toward the rear from the ball pins in the direction of -arrow A- and disengage from the air filter lower section.
– Remove the air filter upper section.
– Disconnect the connectors and free up the wiring harness:

2 - For the Mass Airflow Sensor - G70-

3 - For the Air Filter Bypass Door Valve - N275-

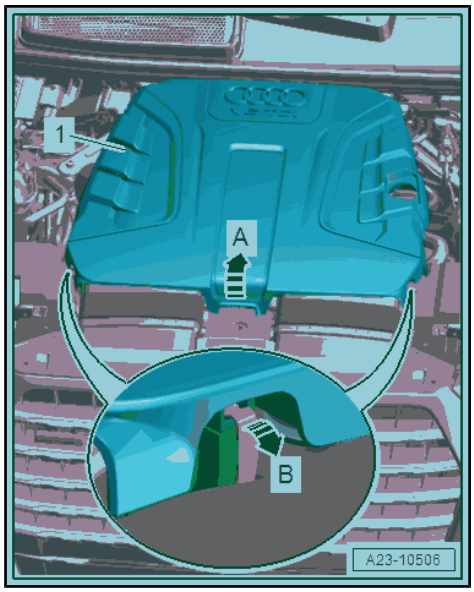

– Loosen the hose clamp -1- and remove the air duct pipe.
– Disconnect the vacuum hose -4-.

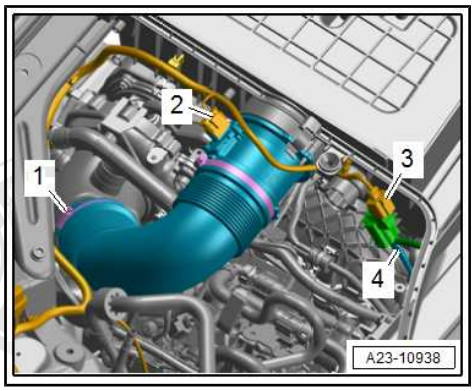

– Release the retainer in the direction of -arrow- and oil filler tube -1- upward from the air filter lower section -2-.

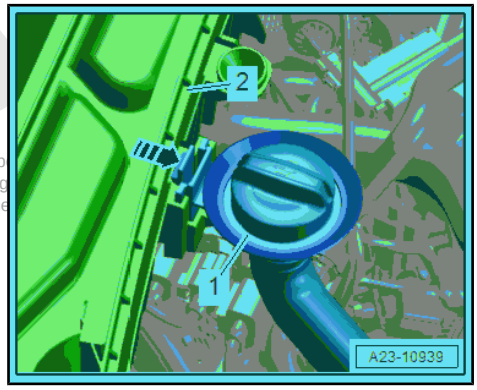

Protected by copyright. Copying for private or commercial purp
permitted unless authorised by AUDI AG. AUDI AG does not g
with respect to the correctness of information in this docume

cardiagn.com

– Release the retainer in the direction of -arrow A- and remove the air ducts -1- from the air filter lower section -2-.
– Remove the front air filter lower section from the ball pin upward in the direction of -arrows B- and then remove the rear mount toward the front in the direction of -arrows C-.

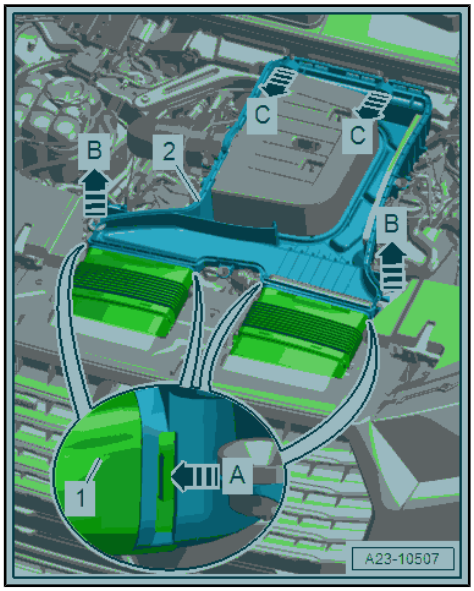

– Disconnect the fuel hoses -1, 2 and 3-. Refer to ⇒ Fuel Supply System; Rep. Gr. 20 ; Connector Couplings; Connector Couplings, Disconnecting .
– Always seal the open lines and connections with clean plugs from the -VAS6122- .
– Free up the fuel hoses and move them to the right side.

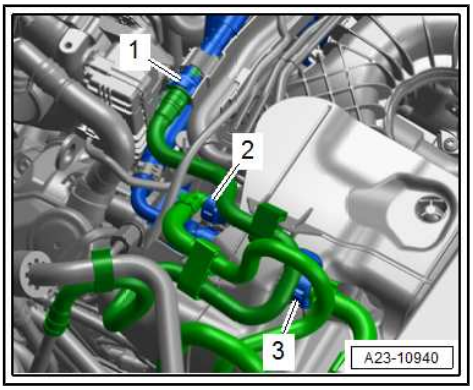

Protected by copyright. Copying for private or commercial purposes, in part or in whole, is not permitted unless authorised by AUDI AG. AUDI AG does not guarantee or accept any liability with respect to the correctness of information in this document. Copyright by AUDI AG.

– Pull the right side of the engine cover -1- off of the ball pins in the direction of -arrows- and remove it.

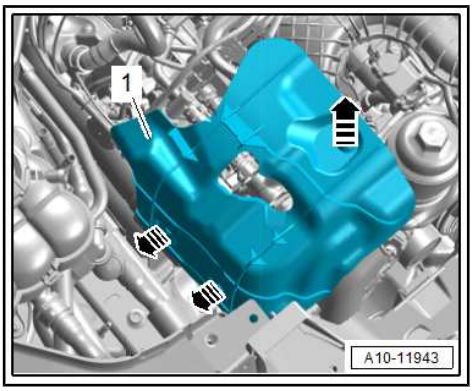

– Remove the bolts -1 and 4-.
– Disconnect the connector -3-, remove the coolant expansion tank -2- and move to the side.

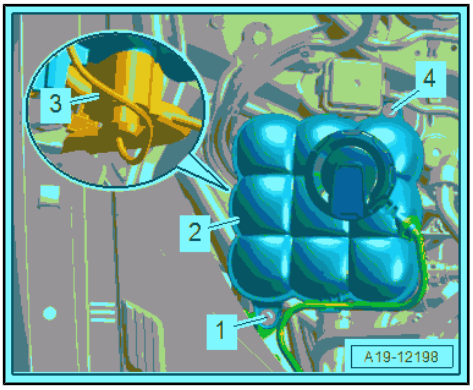

cardiagn.com

– Release the latch in the direction of -arrow- and open the E-box -1-.
– Remove the nut -2- and free up the B+ wire.

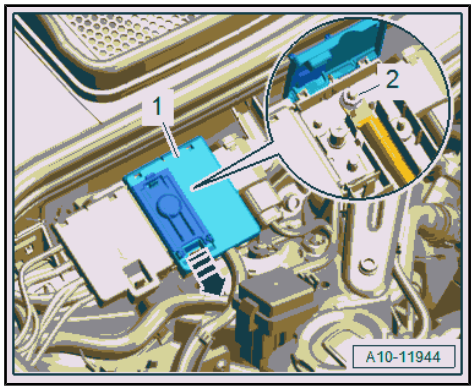

– Free up the wire -1- on the wiring duct.
– Remove the bolt -2- and free up the ground wire.
– Remove the bolt -3- and nut -4- and free up the wiring duct.

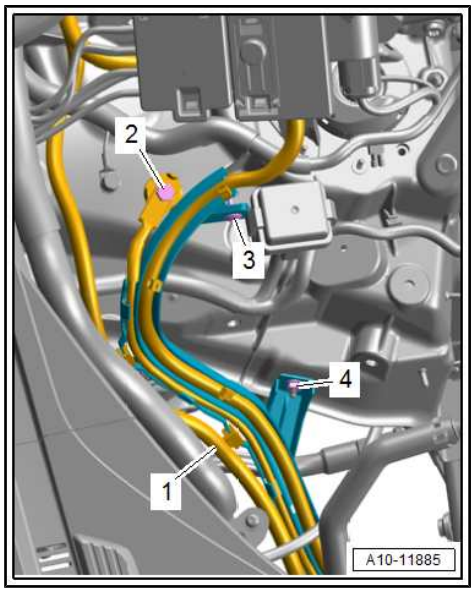

– Lift the clamp -arrow- and remove the coolant hose.

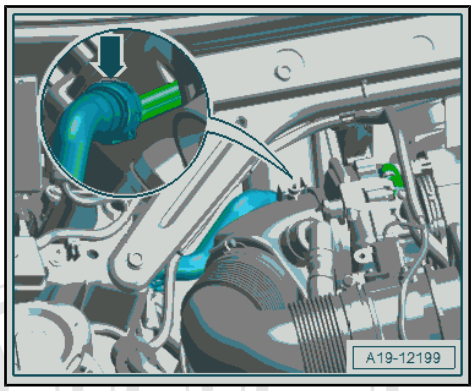

– Loosen the hose clamp -arrow- and remove the coolant hose from the front coolant pipe.

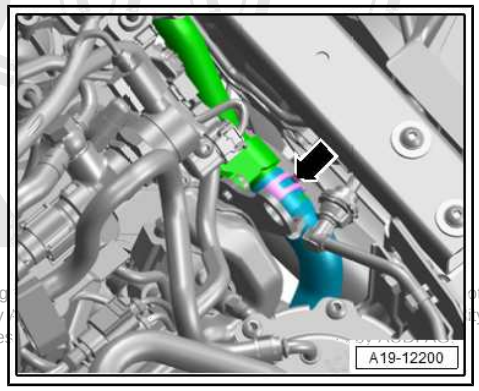

Protected by copyright. Copying
permitted unless authorised by
with respect to the correctne

cardiagn.com

– Remove the cap -2-.
– Release the retainer -1-, turn the oil filler tube -3- counter-clockwise in direction of -arrow- and then remove it.
– Close the oil filler tube with the cap.

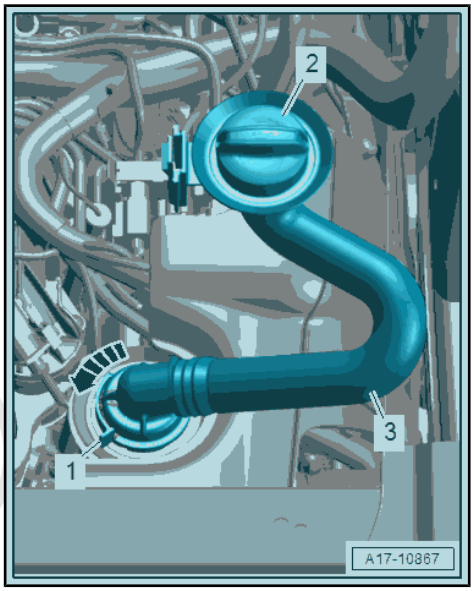

– Loosen the hose clamp -arrow- and remove the air duct hose.

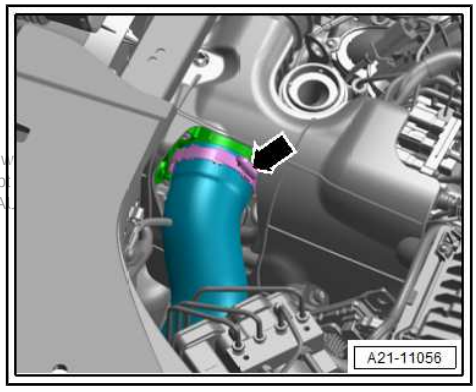

Protected by copyright. Copying for private or commercial purposes, in part or in w
permitted unless authorised by AUDI AG. AUDI AG does not guarantee or accep
with respect to the correctness of information in this document. Copyright by A

– Pull the left side of the engine cover -1- off of the ball pins in the direction of -arrows- and remove it.

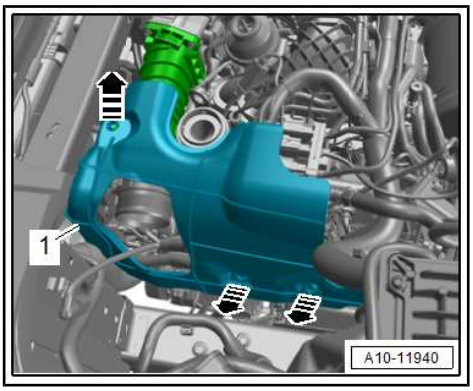

– Lift the clip -2- and remove the upper left coolant hose from the radiator.
– Lift the clip -1- and disconnect the coolant line.

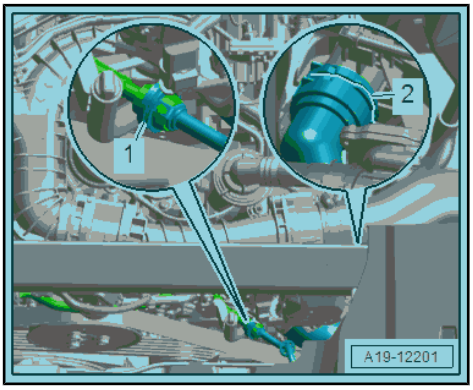

cardiagn.com

– Disconnect the SCR delivery line -2-. Refer to ⇒ Servicing – 6-Cylinder TDI Common Rail Engine; Rep. Gr. 26 ; SCR System (Selective Catalytic Reduction); Overview - Reducing Agent Delivery Line .
– Always seal the open lines and connections with clean plugs from the -VAS6122- .
– Disconnect the vacuum hose -1- by pressing the release buttons on both sides.

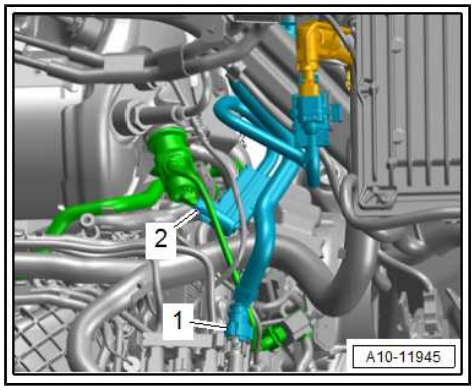

– Disconnect the connector -3-.
– Remove the bolt -2- and free up the Differential Pressure Sensor - G505- from the clip -1-.

– Remove the connectors -2 and 3- from the bracket and disconnect them. Then free up the wires.
– Remove the bolts -arrows- and remove the Engine Control Module - J623- -1-.

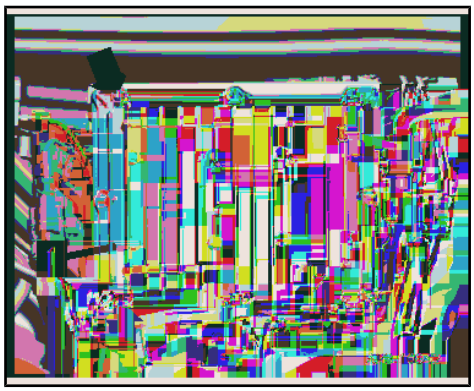

– Disconnect the connector -3-.
– Remove the nut -2-, free up the wiring harness at the clips -arrows- and place the NOx Sensor Control Module - J583- on the engine.

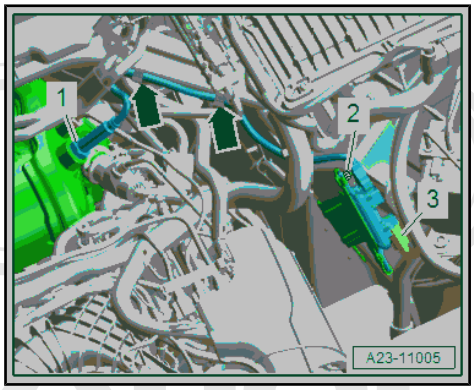

cardiagn.com

Protected by copyright. Copying for private or commercial purposes, in part or in whole, is not permitted unless authorised by AUDI AG. AUDI AG does not guarantee or accept any liability with respect to the correctness of information in this document. Copyright by AUDI AG.

– Disconnect the “K” connector -arrow-.
– Place the Engine Control Module - J623- on the engine and secure it from falling.

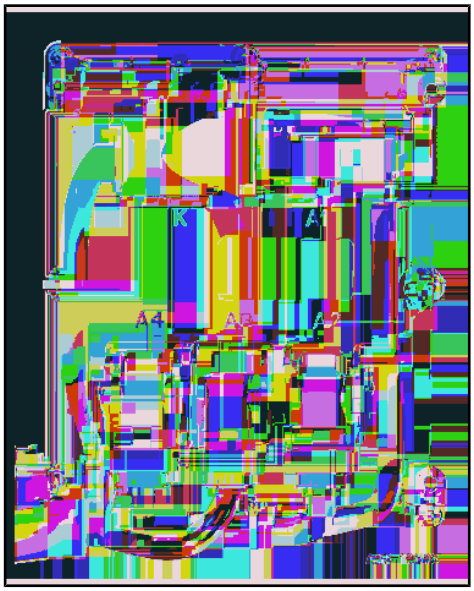

– Remove the nut -4- and free up the ground wire.
– Remove the bolt -2-.
– Disconnect the connectors -1 and 3- and free up the wires.

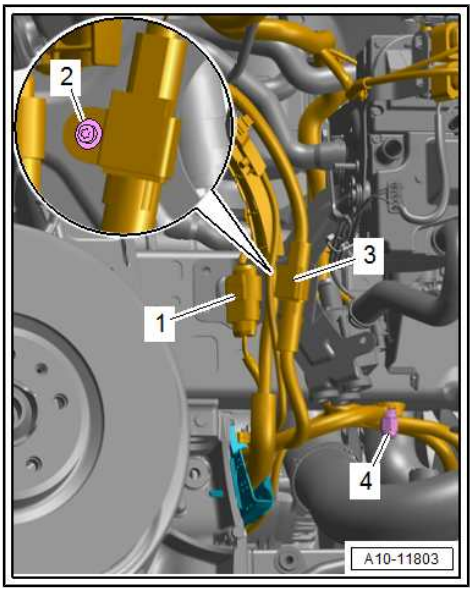

– Equipped on some models: Loosen the screw-type clamp -1-, and remove the exhaust pipe -3- from the muffler -2- for the parking/auxiliary heater.

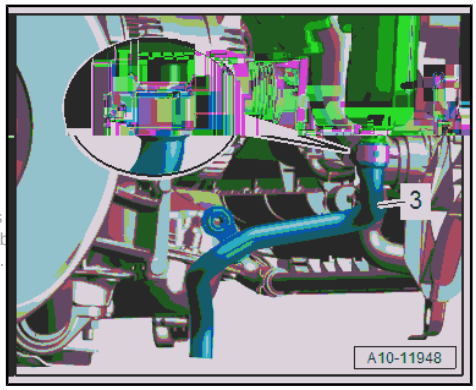

Protected by copyright. Copying for private or commercial purposes, in part or in whole, is permitted unless authorised by AUDI AG. AUDI AG does not guarantee or accept any liab with respect to the correctness of information in this document. Copyright by AUDI AG.

cardiagn.com

– Disconnect the left and right connector -3- for the electrohydraulic engine mount solenoid valve, and free up the wires.
– Remove the left connector -2- from the bracket, disconnect it and free up the wire.
– If the engine should be fastened to the -VAS6095A- , remove the bolt -1- for the support bearing on the left and right sides.

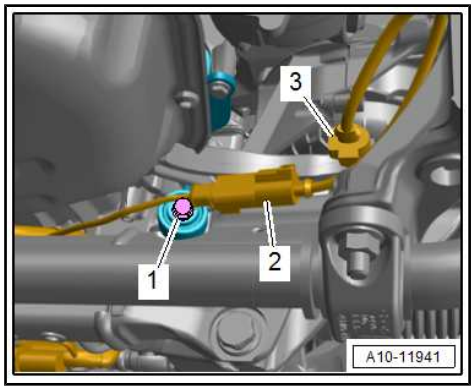

– Loosen the hose clamp -arrow- and remove the air duct hose from the air duct pipe.

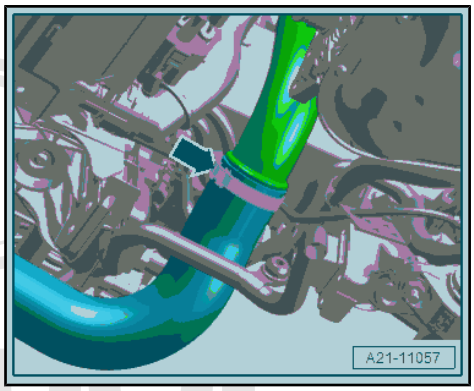

– Disconnect the left and right connector -2- for the Right Front ABS Wheel Speed Sensor - G45- / Left Front ABS Wheel Speed Sensor - G47- and free up the wire.

Protected by copyright. Copying for pr
permitted unless authorised by AUDI
with respect to the correctness of i

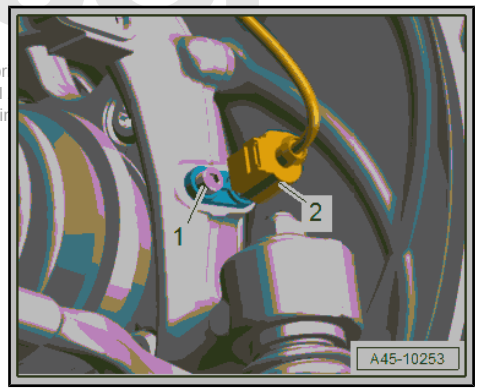

– If installed, disconnect the left and right connector -arrow- for the Left Front Level Control System Sensor - G78- / Right Front Level Control System Sensor - G289- and free up the wire.
– Remove the brake caliper and secure it with the brake hose still attached inside the wheel housing with wire. Refer to ⇒ Brake System; Rep. Gr. 46 ; Front Brakes; Brake Caliper, Removing and Installing .

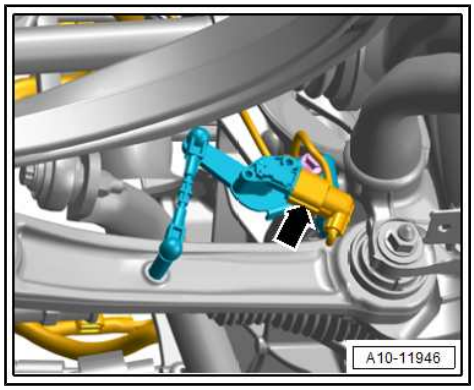

cardiagn.com

– Loosen the threaded connection -1-.

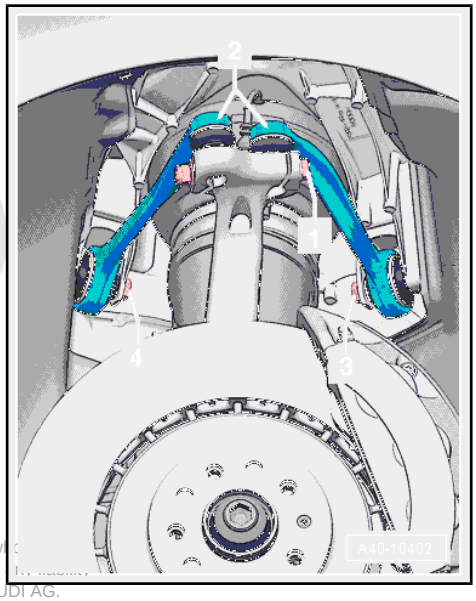

NOTICE

Risk of damaging the wheel bearing housing by deforming it.

– Do not widen the slots in the wheel bearing housing.

– Remove the joint pins in the upper control arm -2- from the wheel bearing housing.

– Repeat the procedure on the other side of the vehicle.

Protected by copyright. Copying for private or commercial purposes, in part or in w
permitted unless authorised by AUDI AG. AUDI AG does not guarantee or accept
with respect to the correctness of information in this document. Copyright by AUDI AG.

– Remove the left and right nut -4-. (The bolt -3- is remove later.)

– Remove the stabilizer bar. Refer to ⇒ Suspension, Wheels, Steering; Rep. Gr. 40 ; Subframe; Stabilizer Bar, Removing and Installing .

– Remove the subframe crossbrace. Refer to ⇒ Suspension, Wheels, Steering; Rep. Gr. 40 ; Subframe; Subframe Crossbrace, Removing and Installing .

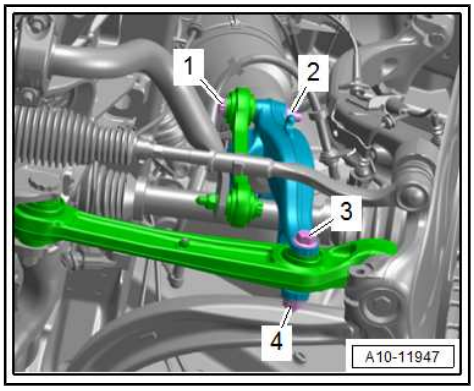

– Remove the left and right bolts -arrow- for the subframe shield.

– Remove the steering intermediate shaft from the steering gear and push together. Refer to ⇒ Suspension, Wheels, Steering; Rep. Gr. 48 ; Steering Column; Steering Intermediate Shaft, Removing and Installing .

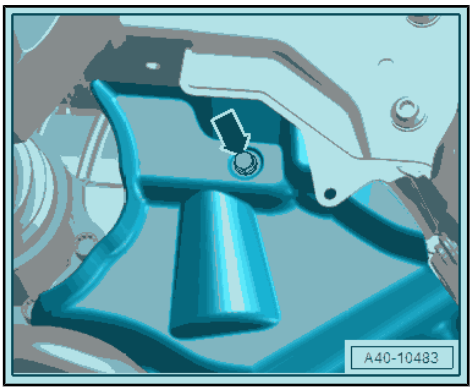

NOTICE

Risk of destroying a used ribbed belt by reversing the running direction.

– Mark the running direction before removal.

– Pay attention to the running direction when reinstalling.

– Turn the tensioner clockwise -arrow- using the -T40087- to release the tension on the ribbed belt.

– Remove the ribbed belt and lock the tensioner using the -T40098- .

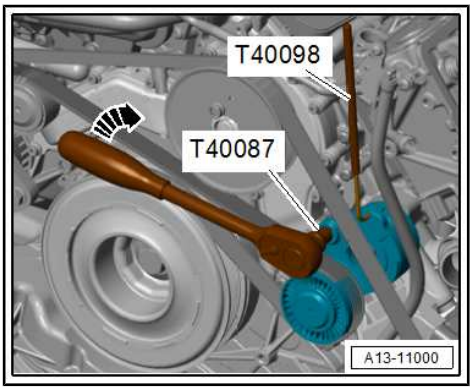

cardiagn.com

– Disconnect the connector -1-.

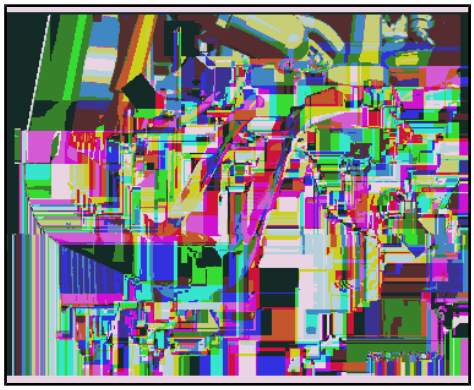

NOTICE

Risk of damaging the refrigerant lines and hoses by removing and pivoting the A/C compressor.

– Do not bend, twist or stretch the refrigerant lines and hoses.

– Remove the bolts -arrows-. Then remove the A/C compressor from the bracket and tie it up on the left side.

– Disconnect the connector -arrow- for the Transmission Fluid Cooling Valve - N509- .

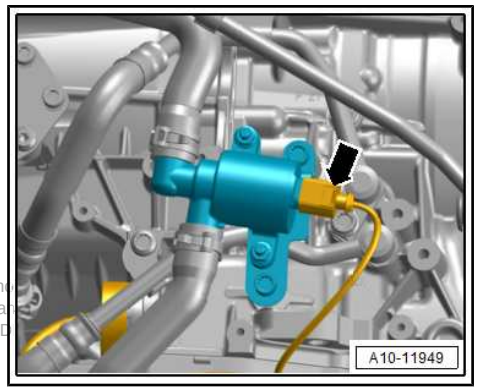

NOTICE

Risk of destroying due to electrostatic discharge.

– Do not touch the connector terminals by hand.

– Touch a ground (for example the hoist) and discharge the static electricity.

Protected by copyright. Copying for private or commercial purposes, in part or in wh
permitted unless authorised by AUDI AG. AUDI AG does not guarantee or accept a
with respect to the correctness of information in this document. Copyright by AUD

– Turn the twist lock counter-clockwise in the direction of -arrow- and disconnect the connector -1- from the transmission.

– Free up the wiring harness on the transmission.

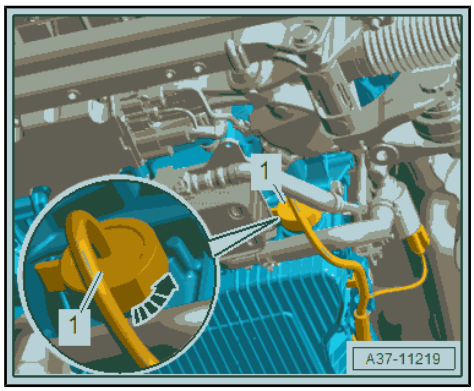

– Disconnect the connectors -1 and 2-.

– Remove the bolts -arrows-.

– Free up the wires.

– Tie up the bracket with the NOx Sensor Control Module 2 - J881- and Particulate Sensor - G784- to the front exhaust pipe.

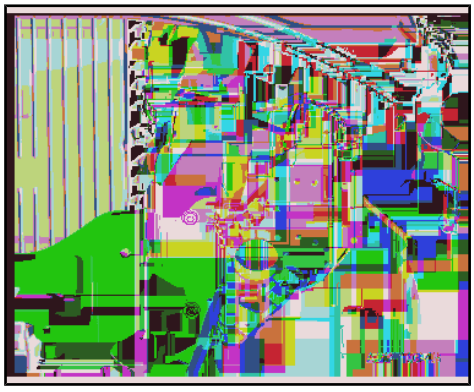

cardiagn.com

– Equipped on some models: free up and disconnect the connector -2- for the Exhaust Gas Temperature Sensor 5 - G815- .

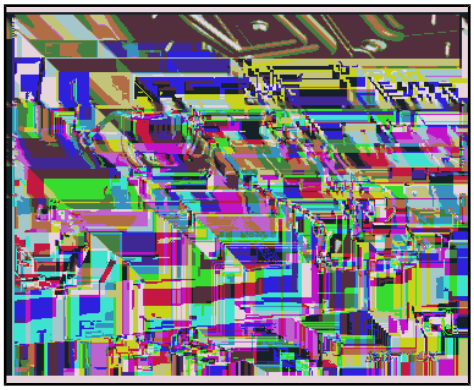

If the Engine Should be Separated from the Transmission:

– Remove the bolts -arrows- and push the ATF cooler with the hoses -1, 2 and 4- attached.

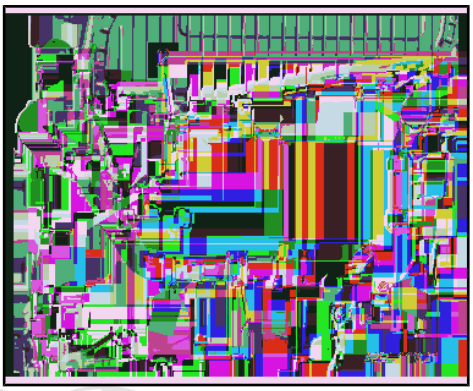

– Remove the lower cover -1- from the transmission in the direction of -arrow-.

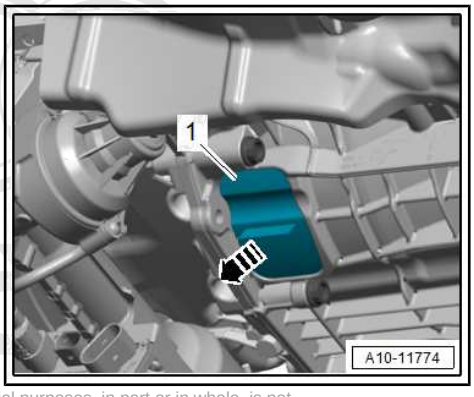

Protected by copyright. Copying for private or commercial purposes, in part or in whole, is not
AUDI AG does not guarantee or accept any liability with respect to the correctness of information in this d

– To loosen the bolts for the torque converter, counterhold the crankshaft using the -T40263- and -T40314- .

NOTICE

Risk of damaging the engine by the timing mechanism skipping.

– **Only let the engine turn in the direction of engine rotation.**

– Turn the crankshaft an additional 60° respectively in the direction of engine rotation -arrow-.

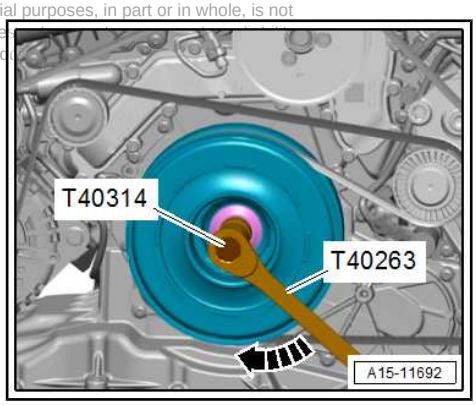

cardiagn.com

– Remove the six bolts -arrow- for the torque converter on the drive plate -1-.

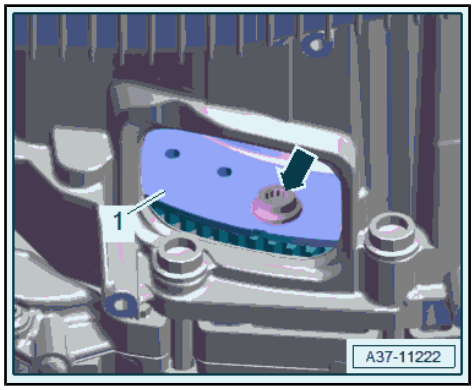

Continuation of Engine Removal

– Release the retainers in the direction of -arrows A- and slide the sleeve -1- on the emergency release cable in the direction of -arrow B-.

– Disengage the rear section of the emergency release cable from the front section of the emergency release cable in the direction of -arrow C-.

Scissor Lift Table, Preparing

– Equip the -VAS6131B- with -VAS6131/10- and -VAS6131/13- as follows:

Table Coordinates	Parts from -VAS6131/10- and -VAS6131/13-			
B5	/10-1	/10-4	/10-5	/10-8
G5	/10-1	/10-4	/10-5	/10-8
B6	/10-1	/10-3	/10-5	/10-6
G6	/10-1	/10-3	/10-5	/10-6
A8	/13-4	/10-2	/10-5	/13-2
H8	/13-4	/10-2	/10-5	/13-2
C15	/10-1	/10-4	/10-5	/10-13
F15	/10-1	/10-4	/10-5	/10-13
F17	/10-1	/10-4	/10-5	/13-2

Protected by copyright. Copying for private or commercial purposes, in pa
permitted unless authorised by AUDI AG. AUDI AG does not guarantee c
with respect to the correctness of information in this document. Copyrig

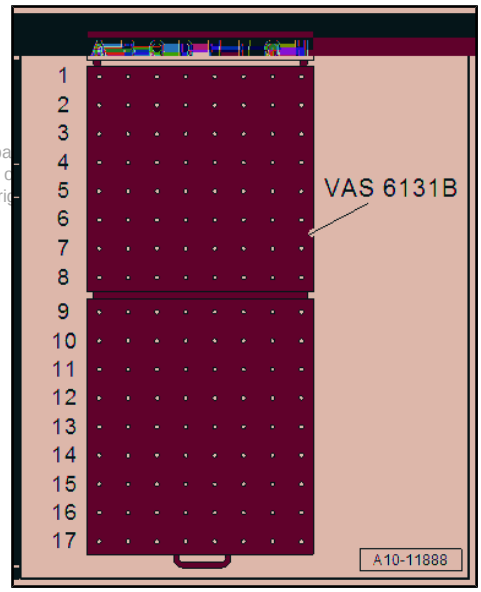

– Secure the mounting elements to the scissor lift table by hand.

– Position the -VAS6131B- so it is level.

• Note the bubble level (sight glass) on support platform.

– Guide the -VAS6131B- under the engine/transmission subassembly.

cardiagn.com

– Attach mounting elements from the -VAS6131/10- and -VAS6131/13- at the left and right of the control arm, as shown.
– Make sure the threaded spindles are completely screwed in.

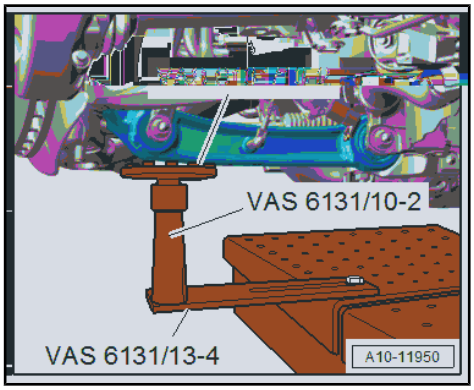

– Attach the mounting elements from the -VAS6131/10- to the mounting element on the left and right front as shown.

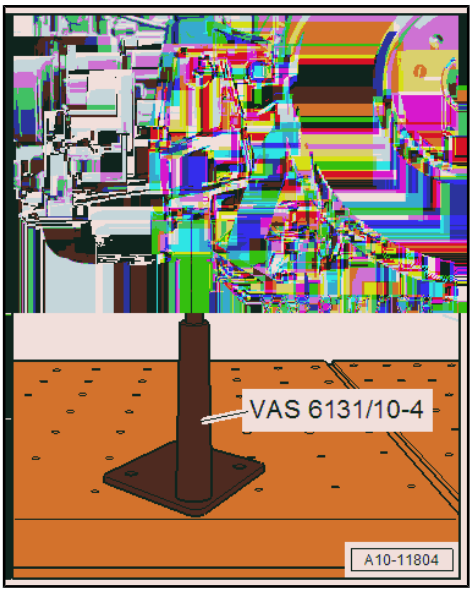

– Install the internal multi-point bolt -arrow- for the crossbrace all the way into the subframe on the left and right sides.
– Attach the mounting elements from the -VAS6131/10- to the multi-point bolts for the crossbrace on the left and right sides as shown.

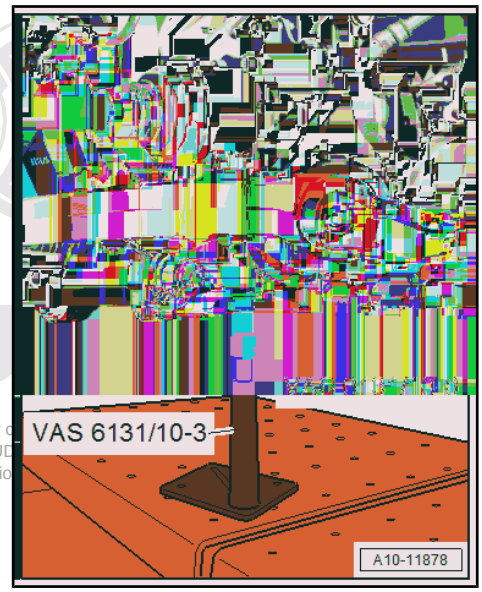

Protected by copyright. Copying for private or c
permitted unless authorised by AUDI AG. AUD
with respect to the correctness of informatio

cardiagn.com

– Attach the mounting elements from the -VAS6131/10- to the tunnel crossmember on the left and right sides as shown.

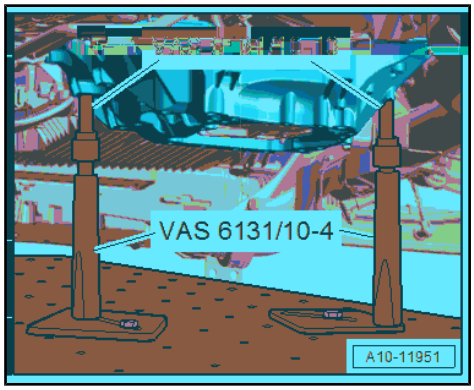

– Attach the mounting elements from the -VAS6131/10- and -VAS6131/13- on the left and right sides under the front exhaust pipe as shown.
– Rotate all of the mounting element spindles upward until all the mounting pins come in contact with the mounting points.
– Tighten the mounting element base plates to 20 Nm on the -VAS6131B- .
– Secure the subframe. Refer to ⇒ Suspension, Wheels, Steering; Rep. Gr. 40 ; Subframe; Subframe, Lowering .

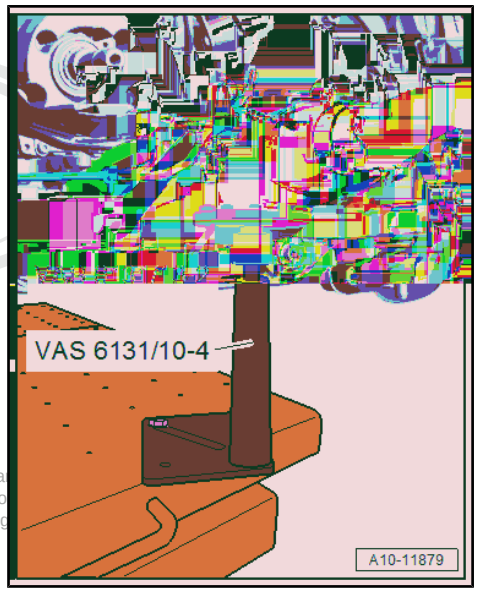

Protected by copyright. Copying for private or commercial purposes, in pa
permitted unless authorised by AUDI AG. AUDI AG does not guarantee o
with respect to the correctness of information in this document. Copyrig

– Remove the bolts -arrows- on the tunnel crossmember.

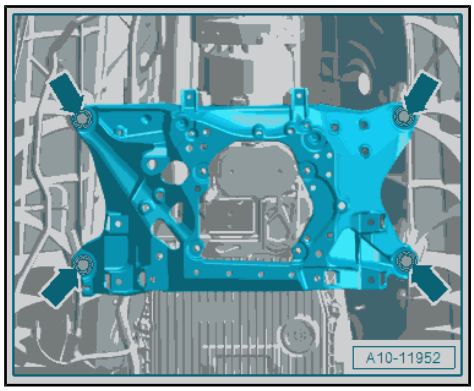

cardiagn.com

– Remove the left and right bolts -3-. (The remaining threaded connections are separated).

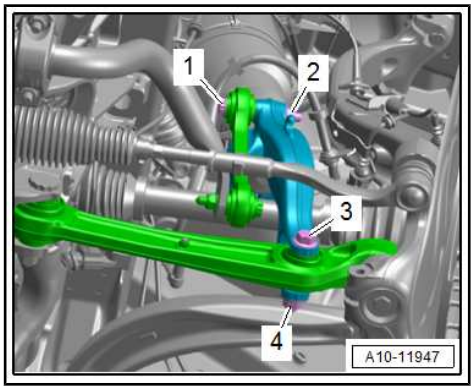

NOTICE

Risk of damaging the lines and hoses, as well as the engine compartment by lowering the engine/transmission assembly.

- **Make sure all connections between the engine, transmission, subframe and body have been disconnected.**
- **Carefully guide the engine/transmission assembly with the subframe out of engine compartment when lowering.**

– Carefully guide the suspension struts on the longitudinal members.

– Lower the -VAS6131B- with the engine/transmission assembly and remove from under the vehicle.

1.1.2 Engine, Removing, Vehicle with High-Voltage System

Special tools and workshop equipment required

- Pry Lever - 80-200-
- Engine Bung Set - VAS6122-
- Scissor Lift Table - VAS6131B-
- Scissor Lift Table - Audi Set - VAS6131/10-
- (Quantity: 2) Scissor Lift Table - A6 Set - Mounting Pins - VAS6131/12-2- from Scissor Lift Table - A6 Set - VAS6131/12-
- Scissor Lift Table - Q7 Set - VAS6131/13-
- Coolant Collection System - VAS5014- or Shop Crane - Drip Tray - VAS6208-
- Hose Clip Pliers - VAS6362-
- Hose Clip Pliers - VAS6340-
- Wrench - 21mm - T40263-
- Valve Cotter Tool Kit - Adapter - T40314-
- Commercially available Step Ladder

Protected by copyright. Copying for private or commercial purposes, in part or in whole, is not permitted unless authorised by AUDI AG. AUDI AG does not guarantee or accept any liability with respect to the correctness of information in this document. Copyright by AUDI AG.

Procedure

- With the lock carrier installed, the engine is removed downward with the transmission and subframe.
- The securing components for the wires must correspond to the production series. Refer to Parts Catalog.
- All bolts on suspension components with bonded rubber bushings must be tightened in curb weight position (no load).
- Bonded rubber bushings have a limited range of rotation. Axle components with bonded rubber bushings must be brought into the position they will be in when driving before they are tightened (curb weight position). Otherwise, the bonded rubber bushing will be under stress, which will reduce the service life.

– Before starting the procedures, determine the curb weight position (refer to ⇒ Suspension, Wheels, Steering; Rep. Gr. 00 ; Repair Information; Wheel Bearing in Curb Weight, Lifting Vehicles with Coil Spring or determine the control position (refer to ⇒ Suspension, Wheels, Steering; Rep. Gr. 00 ; Repair

cardiagn.com

Information; Wheel Bearing in Control Position, Lifting Vehicles with Air Suspension).

– Position the front wheels so they are straight.

- The electro-mechanical parking brake must be released before disconnecting battery so the driveshaft can be rotated to remove it.
- When on the removed engine the turbocharger is to be removed, for this the Turbocharger Control Module 1 - J724- must be brought into the “closed” position using the Vehicle Diagnostic Tester . Refer to ⇒ Servicing – 6-Cylinder TDI Common Rail Engine; Rep. Gr. 21 ; Turbocharger; Turbocharger, Removing and Installing .

DANGER

Extremely dangerous due to high-voltage.

Electrocution can cause death or very serious personal injury.

– Have the high-voltage system de-energized by a qualified person.

Protected by copyright. Copying for private or commercial purposes, in part or in whole, is not permitted unless authorised by AUDI AG. AUDI AG does not guarantee or accept any liability with respect to the correctness of information in this document. Copyright by AUDI AG.

– De-energize the high-voltage system. Refer to ⇒ “7 High-Voltage System, De-Energizing”, page 364 .

– Disconnect the ground cable from the battery terminal. Refer to ⇒ Electrical Equipment; Rep. Gr. 27 ; Battery; Battery, Disconnecting and Connecting .

CAUTION

The cooling system is under pressure when the engine is warm. Risk of scalding due to hot steam and hot coolant.

Scalding the skin and other parts of the body is possible.

– Wear safety gloves.

– Wear protective eyewear.

– Reduce the pressure by covering the coolant expansion tank cap with a cloth and carefully opening it.

– Open the coolant expansion tank cap -1- for the engine coolant circuit by releasing the catch -arrow-.

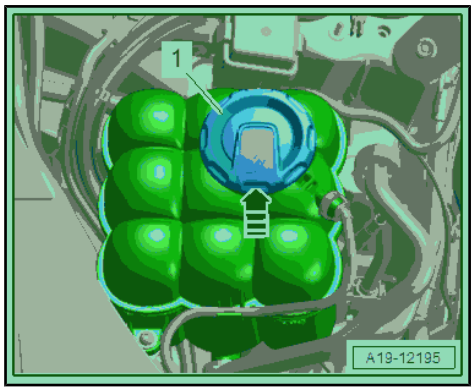

cardiagn.com

– Open the coolant expansion tank cap -arrow- for the high-voltage system coolant circuit.

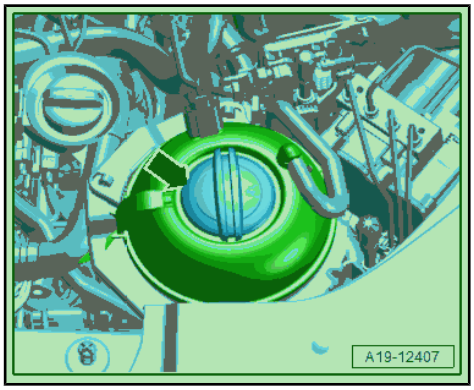

– Remove the front wheels. Refer to ⇒ Suspension, Wheels, Steering; Rep. Gr. 44 ; Wheels, Tires .
– Remove the left and right wheel housing liner front sections. Refer to ⇒ Body Exterior; Rep. Gr. 66 ; Wheel Housing Liner; Front Wheel Housing Liner, Removing and Installing .
– Remove the noise insulation. Refer to ⇒ Body Exterior; Rep. Gr. 66 ; Noise Insulation; Noise Insulation, Removing and Installing .
– Remove the left underbody trim panel. Refer to ⇒ Body Exterior; Rep. Gr. 66 ; Underbody Trim Panel; Underbody Trim Panels, Removing and Installing .
– Remove the left and right lower longitudinal members. Refer to ⇒ Body Exterior; Rep. Gr. 50 ; Lock Carrier; Overview - Lock Carrier .
– Remove the driveshaft. Refer to ⇒ Rear Final Drive; Rep. Gr. 39 ; Driveshaft; Driveshaft, Removing and Installing .
– Remove the left and right bolts -arrows- and remove the upper section of the subframe shield -1-.

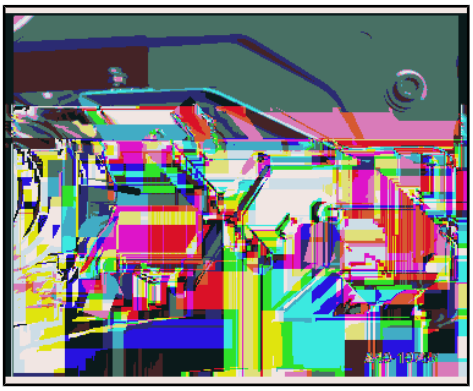

– Place the container of the -VAS5014- or the -VAS6208- underneath.
– Lift the clamp -arrow- and remove the coolant hose from the radiator and drain the coolant.

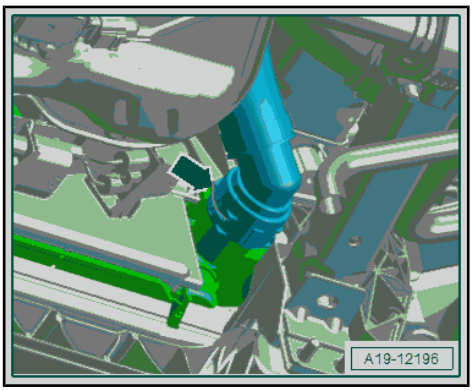

Protected by copyright. Copying for private or commercial purposes, in part or in whole, is not permitted unless authorised by AUDI AG. AUDI AG does not guarantee or accept any liability with respect to the correctness of information in this document. Copyright by AUDI AG.

– Loosen the hose clamps -arrows-, remove the coolant hoses and let the coolant drain out.
– Tie up the coolant pipes.

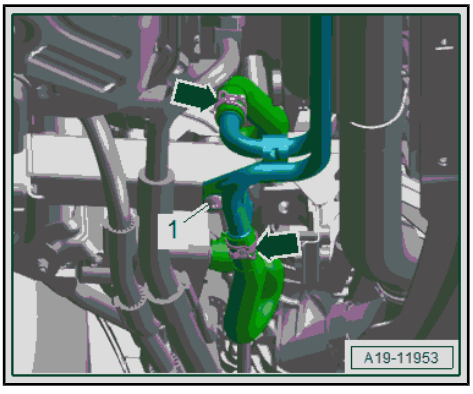

cardiagn.com

– Lift the clamp -arrow- and remove the right rear coolant hose.
– Hold the coolant hose downward and allow the coolant to drain.

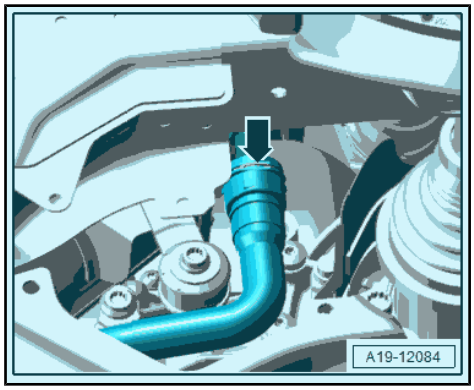

– Loosen the hose clamp -arrow-, remove the coolant hose and let the coolant drain out.

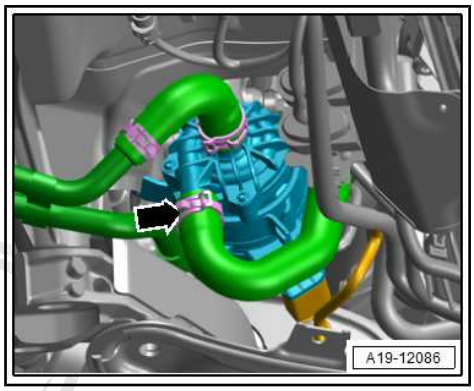

– Open the left and right clip in the direction of -arrow B-.
– Remove the air filter upper section -1- in the center toward the rear from the ball pins in the direction of -arrow A- and disengage from the air filter lower section.
– Remove the air filter upper section.

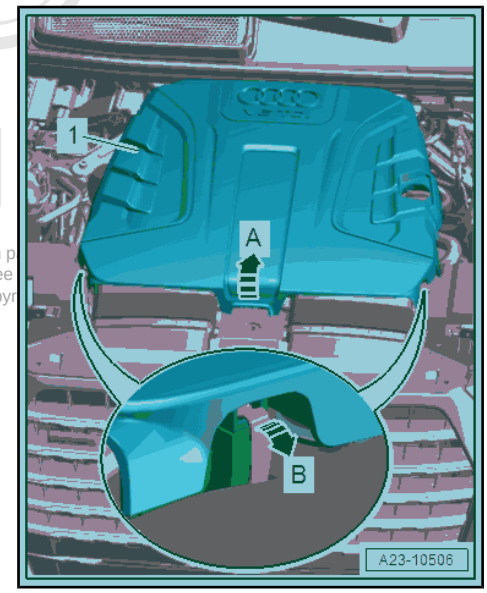

Protected by copyright. Copying for private or commercial purposes, in p
permitted unless authorised by AUDI AG. AUDI AG does not guarantee
with respect to the correctness of information in this document. Copyr

– Disconnect the connectors and free up the wiring harness:

2 - For the Mass Airflow Sensor - G70-

3 - For the Air Filter Bypass Door Valve - N275-

– Loosen the hose clamp -1- and remove the air duct pipe.
– Disconnect the vacuum hose -4-.

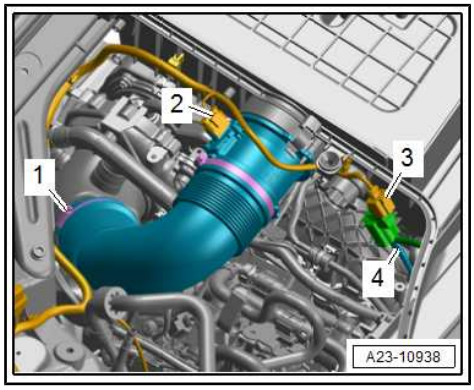

cardiagn.com

– Release the retainer -arrow- and oil filler tube -1- upward from the air filter lower section -2-.

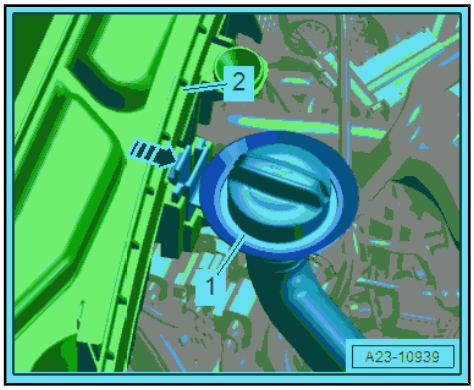

– Release the retainer in the direction of -arrow A- and remove the air ducts -1- from the air filter lower section -2-.
– Remove the front air filter lower section from the ball pin upward in the direction of -arrows B- and then remove the rear mount toward the front in direction of -arrows C-.

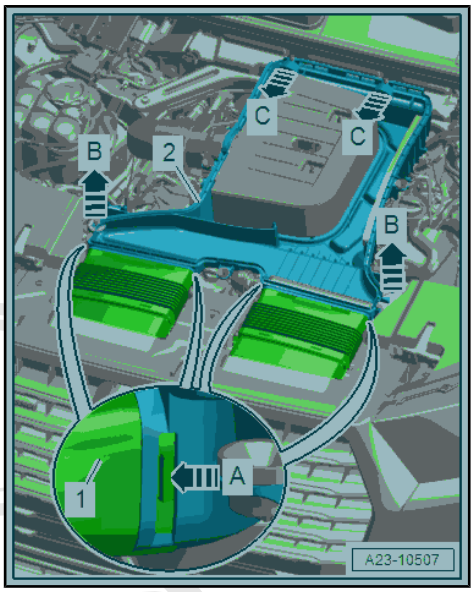

– Disconnect the fuel hoses -1, 2 and 3-. Refer to ⇒ Fuel Supply System; Rep. Gr. 20 ; Connector Couplings; Connector Couplings, Disconnecting .
– Always seal the open lines and connections with clean plugs from the -VAS6122- .
– Free up the fuel hoses and move them to the right side.

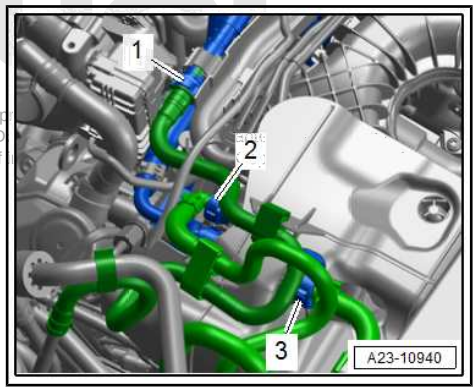

– Pull the right side of the engine cover -1- off of the ball pins in the direction of -arrows- and remove it.

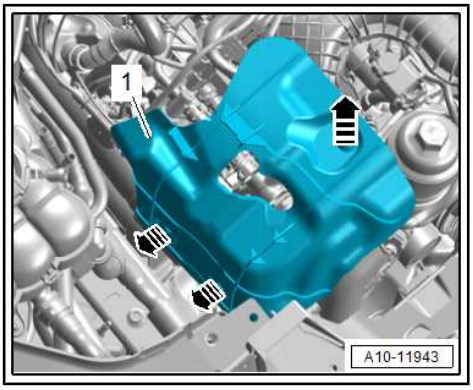

Copyright by AUDI AG. Copying for private or commercial purposes, in part or in whole, is not permitted unless authorised by AUDI AG. AUDI AG does not guarantee or accept any liability with respect to the correctness of information in this document.
cardiagn.com

– Remove the bolts -1 and 4-.
– Disconnect the connector -3-, remove the coolant expansion tank -2- and move to the side.

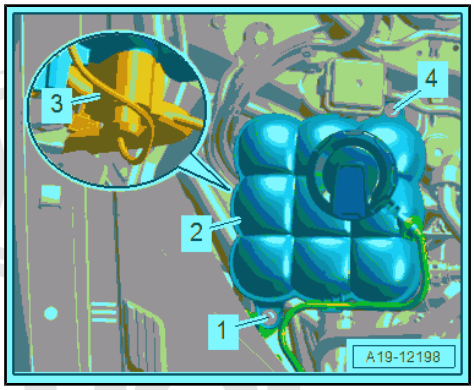

– Release the latch in the direction of -arrow- and open the E-box -1-.
– Remove the nut -2- and free up the B+ wire.

Protected by copyright. Copying permitted unless authorised by with respect to the correctnes

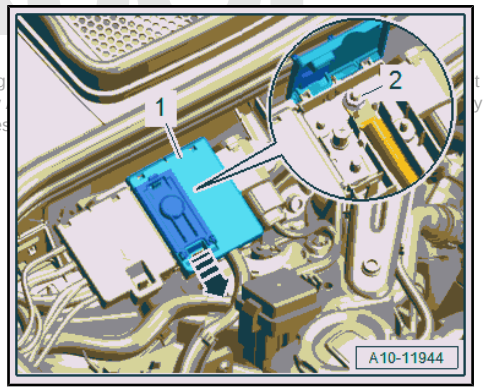

– Free up the wire -1- on the wiring duct.
– Remove the bolt -2- and free up the ground wire.
– Remove the bolt -3- and nut -4- and free up the wiring duct.

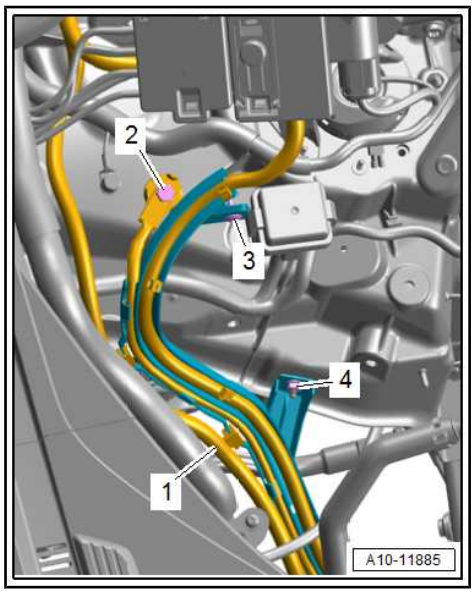

– Lift the clamp -arrow- and remove the coolant hose.

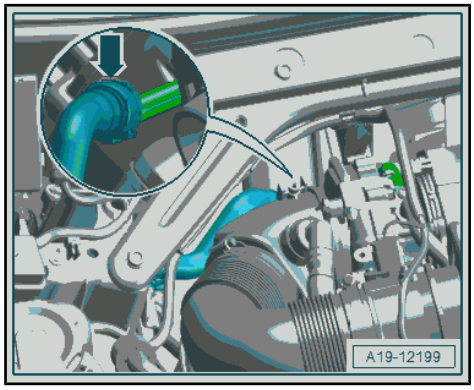

cardiagn.com

– Loosen the hose clamp -arrow- and remove the coolant hose from the front coolant pipe.

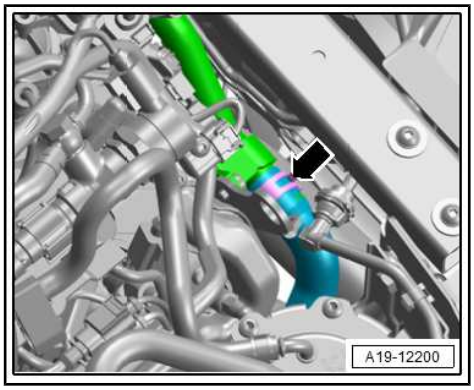

– Remove the cap -2-.
– Release the retainer -1-, turn the oil filler tube -3- counter-clockwise in the direction of -arrow- and then remove it.
– Close the oil filler tube with the cap.

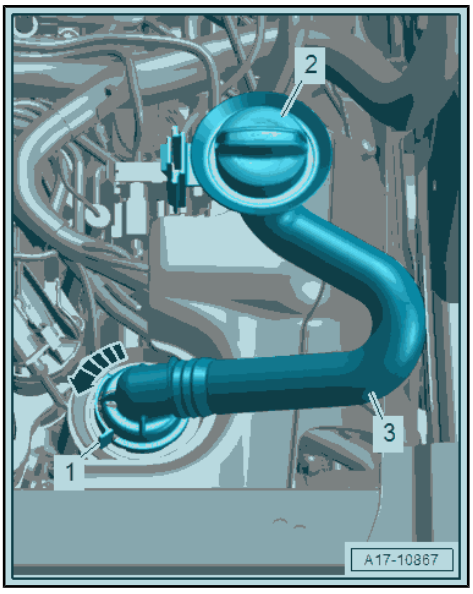

– Disconnect the connector -2-.
– Release the retainers in the direction of -arrows- and remove the coolant expansion tank -1-.
– Loosen the hose clamp -3- and remove the coolant hose.
– Loosen the hose clamp -4-, remove the coolant hose free up and tie up to the engine.

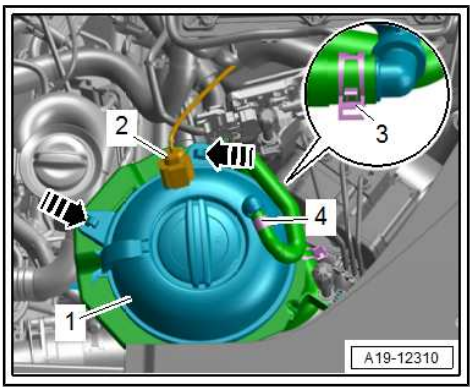

Protected by copyright. Copying for private or commercial purposes, in part or in whole, is not permitted unless authorised by AUDI AG. AUDI AG does not guarantee or accept any liability with respect to the correctness of information in this document. Copyright by AUDI AG.

– Free up the refrigerant line -2- and latch release cable -3-.
– Remove the bolts -arrows- and remove the coolant expansion tank bracket -1-.

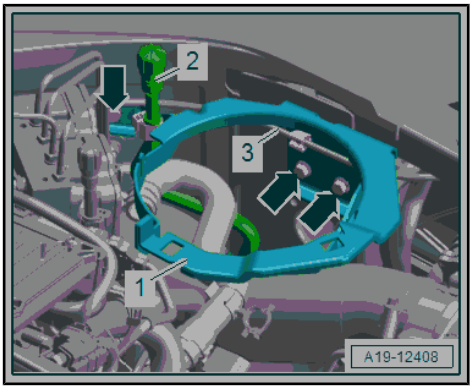

cardiagn.com

– Loosen the hose clamp -arrow- and remove the air duct hose.

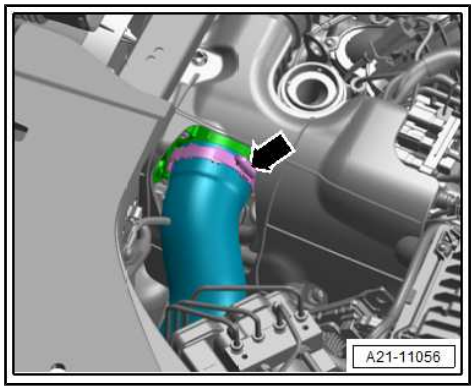

– Pull the left side of the engine cover -1- off of the ball pins in the direction of -arrows- and remove it.

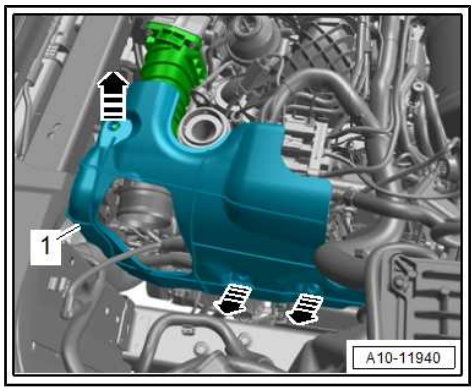

– Lift the clip -2- and remove the upper left coolant hose from the radiator.

– Lift the clip -1- and disconnect the coolant line.

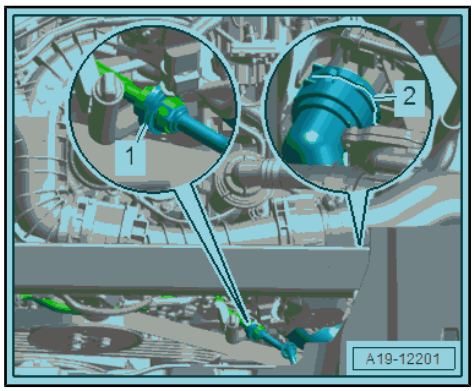

– Disconnect the SCR delivery line -2-. Refer to ⇒ Servicing – 6-Cylinder TDI Common Rail Engine; Rep. Gr. 26 ; SCR System (Selective Catalytic Reduction); Overview - Reducing Agent Delivery Line .

– Always seal off any open lines and connections with plugs that are thoroughly cleaned from the -VAS6122- .

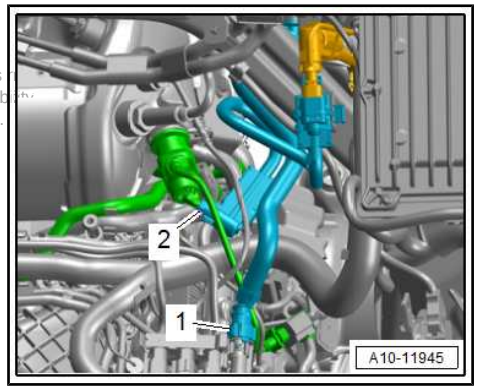

Reproduced by Cardiagn Copyright © 2016 or other copyright owner in whole, is prohibited unless authorised by AUDI AG. AUDI AG does not guarantee or accept any liability with respect to the correctness of information in this document. Copyright by AUDI AG.

cardiagn.com

– Disconnect the connector -3-.
– Remove the bolt -2- and free up the Differential Pressure Sensor - G505- from the clip -1-.

– Loosen the hose clamp -arrow- and remove the coolant hose from the Coolant Change-Over Valve 2 - N633- .
– Free up the coolant hose and tie it up to the engine.

Protected by copyright. Copying for private or commercial p
permitted unless authorised by AUDI AG. AUDI AG does n
with respect to the correctness of information in this doc

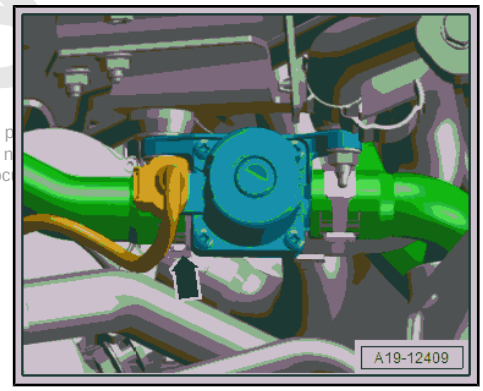

– Disconnect the connector -3-.
– Remove the nut -2-, free up the wiring harness at the clips -arrows- and place the NOx Sensor Control Module - J583- on the engine.

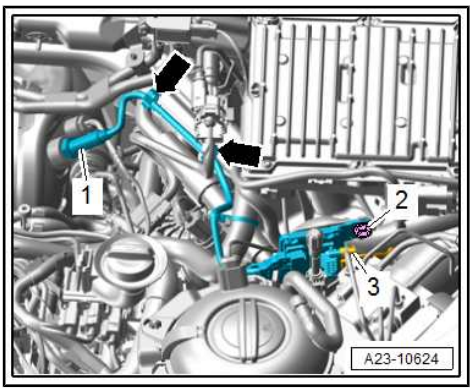

– Remove the connectors -2 and 3- from the bracket and disconnect them. Then free up the wires.
– Remove the bolts -arrows- and remove the Engine Control Module - J623- -1-.

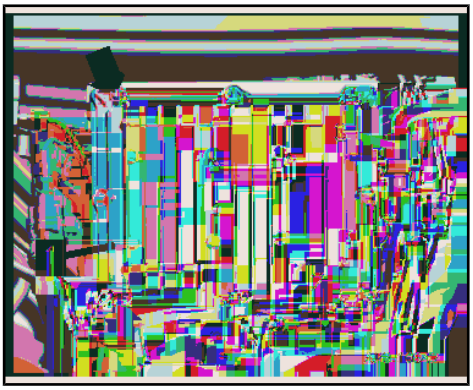

cardiagn.com

– Disconnect the “K” connector -arrow-.
– Place the Engine Control Module - J623- on the engine and secure it from falling.

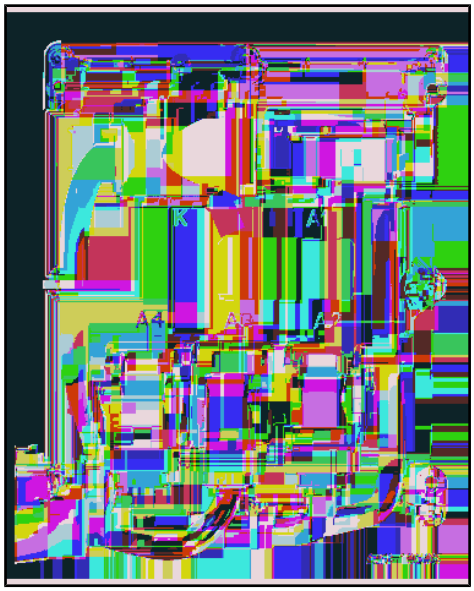

– Loosen the hose clamp -arrow- and remove the air duct hose from the air duct pipe.

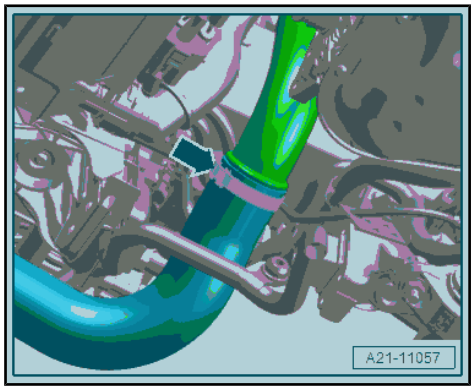

– Equipped on some models: loosen the screw-type clamp -1-, and remove the exhaust pipe -3- from the muffler -2- for the parking/auxiliary heater.

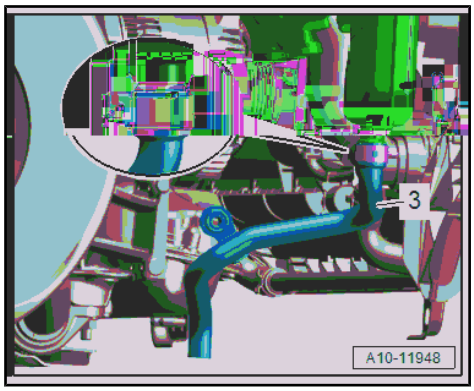

Protected by copyright. Copying for private or commercial purposes, in part or in whole, is not permitted unless authorised by AUDI AG. AUDI AG does not guarantee or accept any liability with respect to the correctness of information in this document. Copyright by AUDI AG.

cardiagn.com

– Remove the nut -4- and free up the ground wire.
– Remove the bolt -2-.
– Disconnect the connectors -1 and 3- and free up the wires.

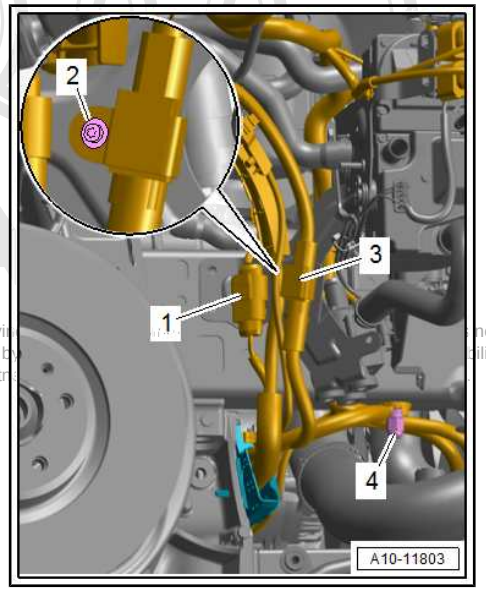

Protected by copyright. Copyi not permitted unless authorised by ility with respect to the correctn

– Disconnect the left and right connector -3- for the electrohydraulic engine mount solenoid valve, and free up the wires.
– Remove the left connector -2- from the bracket, disconnect it and free up the wire.
– If the engine should be fastened to the -VAS6095A- , remove the bolt -1- for the support bearing on the left and right sides.
– Remove the Electric A/C Compressor - V470- from the bracket. Refer to ⇒ Heating, Ventilation and Air Conditioning; Rep. Gr. 87 ; A/C Compressor; A/C Compressor, Removing and Installing from Bracket .

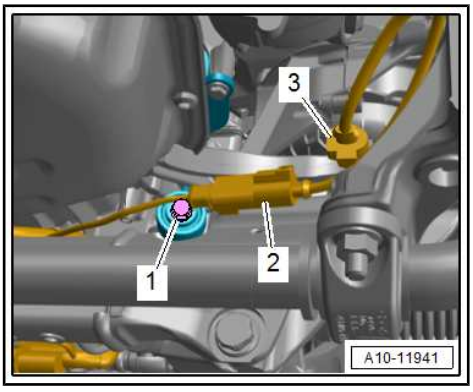

– Disconnect the left and right connector -2- for the Right Front ABS Wheel Speed Sensor - G45- / Left Front ABS Wheel Speed Sensor - G47- and free up the wire.

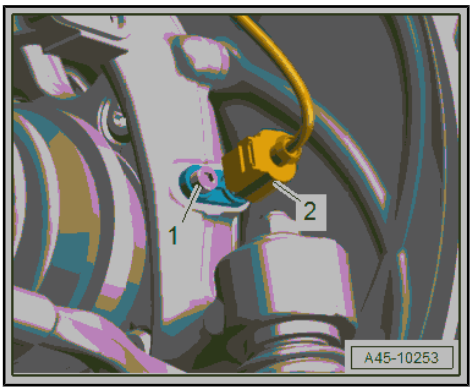

– Equipped on some models: Disconnect the connector -arrow- on the left and right sides for the Left Front Level Control System Sensor - G78- / Right Front Level Control System Sensor - G289- and free up the wire.
– Remove the brake caliper and secure it with the brake hose still attached inside the wheel housing with wire. Refer to ⇒ Brake System; Rep. Gr. 46 ; Front Brakes; Brake Caliper, Removing and Installing .

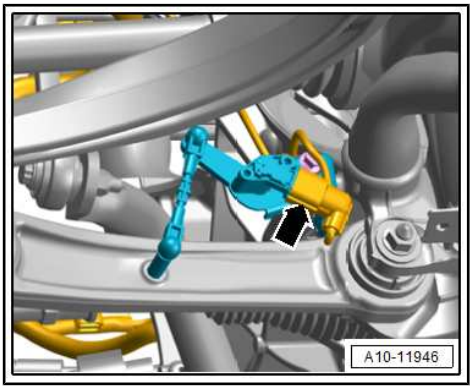

cardiagn.com

– Loosen the threaded connection -1-.

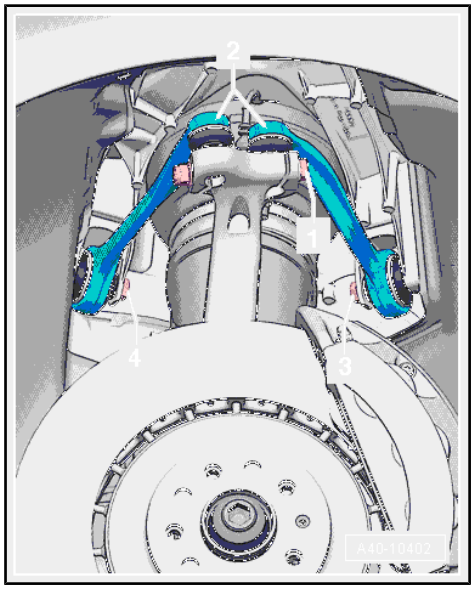

NOTICE

Risk of damaging the wheel bearing housing by deforming it.

– Do not widen the slots in the wheel bearing housing.

– Remove the joint pins in the upper control arm -2- from the wheel bearing housing.

– Repeat the procedure on the other side of the vehicle.

– Remove the left and right nut -4-. (The bolt -3- is remove later.)

– Remove the stabilizer bar. Refer to ⇒ Suspension, Wheels, Steering; Rep. Gr. 40 ; Subframe; Stabilizer Bar, Removing and Installing .

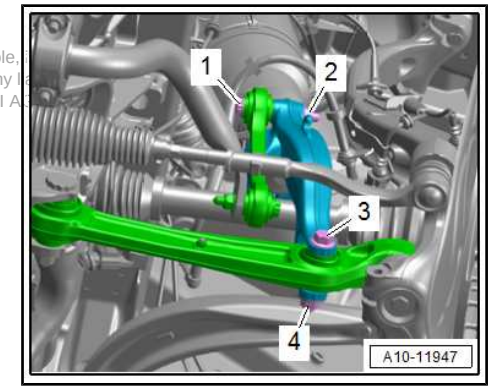

– Remove the subframe crossbrace. Refer to ⇒ Suspension, Wheels, Steering; Rep. Gr. 40 ; Subframe; Subframe Crossbrace, Removing and Installing .

– Remove the steering intermediate shaft from the steering gear and push together. Refer to ⇒ Suspension, Wheels, Steering; Rep. Gr. 48 ; Steering Column; Steering Intermediate Shaft, Removing and Installing .

– Remove left and right transmission mount bolt -1-.

– Disconnect the connector -2- for the right transmission mount.

– Disconnect the connector -3- on the right of the transmission and free up the wire.

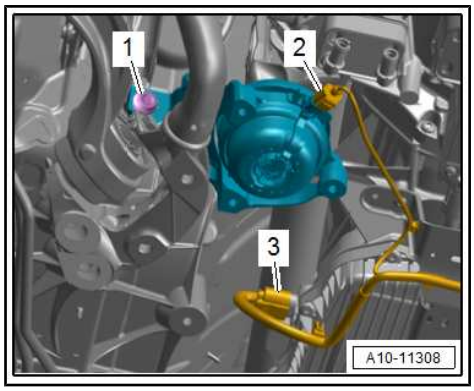

NOTICE

There is a risk of destroying the control module through the electrostatic charge and reduced cleanliness.

– Discharge electrostatic charge: Touch the electro-static discharge work surface

– Protect the inner control module from moisture and dirt.

– Disconnect the connector -2- for the transmission.

– Disconnect the connectors -1, 3 and 4-.

– Free up the wiring harness on the transmission.

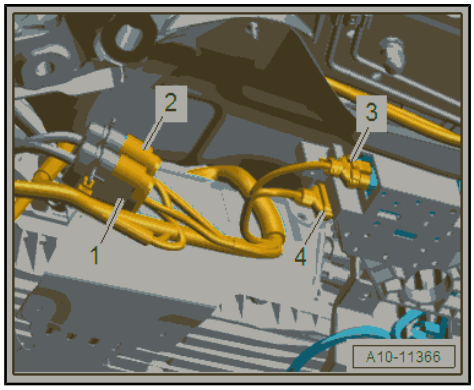

Protected by copyright. Copying for private or commercial purposes, in part or in whole, is not permitted unless authorised by AUDI AG. AUDI AG does not guarantee or accept any liability with respect to the correctness of information in this document. Copyright by AUDI AG.

cardiagn.com

– Remove the nut -2-.
– Free up the wiring harness -3-.
– Remove the bolts -arrows-.
– Remove the Drive Motor High-Voltage Wiring Harness - PX2- -4-.
– Release and remove the Electrical A/C Compressor High-Voltage Cable - P3- -1-.

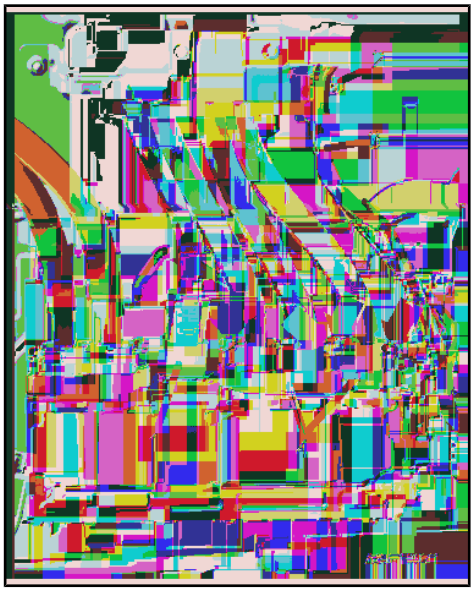

– To do so remove the connector lock -3- in the direction of -arrow A-.
– Press the release -4- in the direction of -arrow B- and remove the connector -1- approximately 5 mm up to the next release level.
– Press the release -5- in the direction of -arrow D- and remove the connector from the connector mount -2- in the direction of -arrow C-.

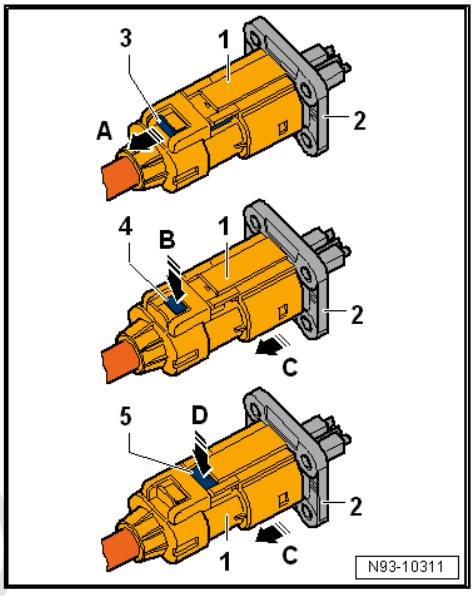

If the Engine Should be Removed from the Three-Phase Current Drive - VX54- with the Transmission:

– Remove the bolts -arrows- and push the ATF cooler with the hoses -1 to 4- connected.

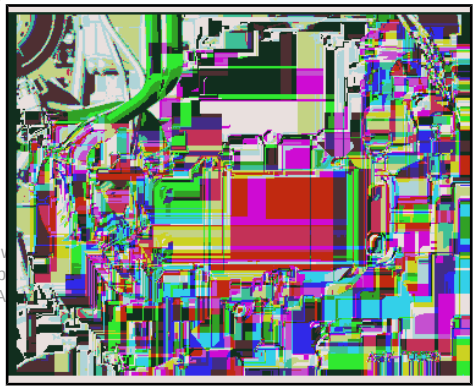

Protected by copyright. Copying for private or commercial purposes, in part or in w
permitted unless authorised by AUDI AG. AUDI AG does not guarantee or accep
with respect to the correctness of information in this document. Copyright by A

cardiagn.com

– Remove the lower cover -1- from the Three-Phase Current Drive - VX54- in the direction of -arrow-.

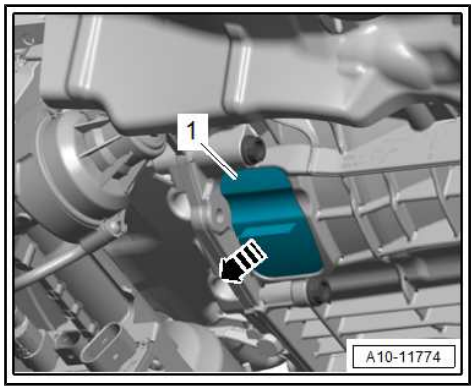

– To loosen the bolts for the torsion dampers, counterhold the crankshaft using the -T40263- and -T40314- .

NOTICE

Risk of damaging the engine by the timing mechanism skipping.

– Only let the engine turn in the direction of engine rotation.

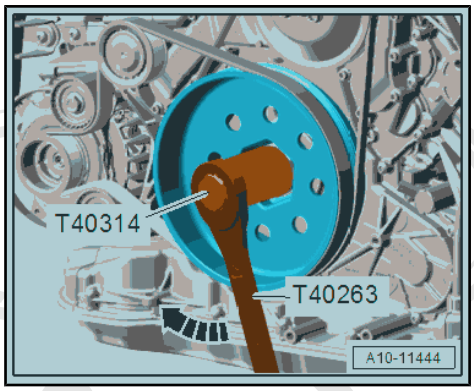

– Turn the crankshaft an additional 60° respectively in the direction of engine rotation in the direction of -arrow-.

– Remove the six bolts -arrow- for the torsion dampers on the drive plate -1-.

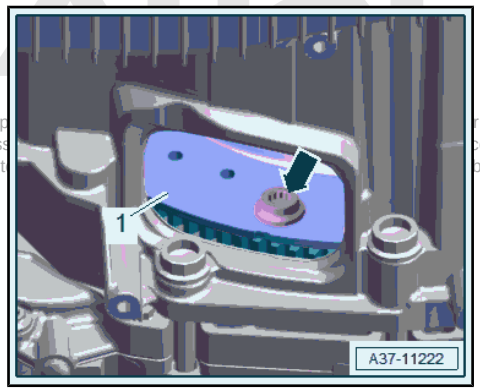

Protected by cop
permitted unless
with respect t
r in whole, is not
ccept any liability
by AUDI AG.

cardiagn.com

Continuation of Engine Removal

– Release the retainers in the direction of -arrows A- and slide the sleeve -1- on the emergency release cable in the direction of -arrow B-.

– Disengage the rear section of the emergency release cable from the front section of the emergency release cable in the direction of -arrow C-.

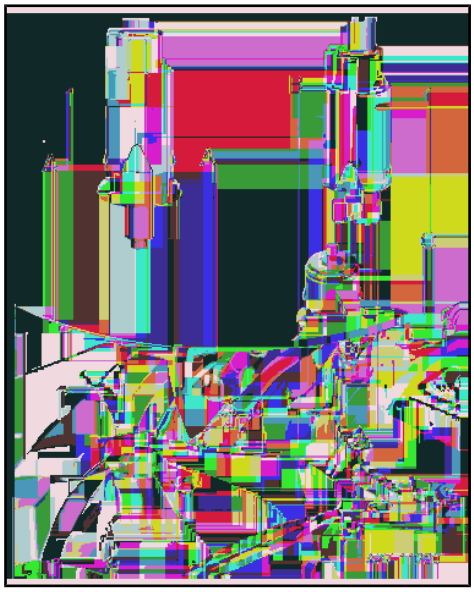

Scissor Lift Table, Preparing

– Equip the -VAS6131B- with -VAS6131/10- , -VAS6131/12-2- and -VAS6131/13- as follows:

Table Coordinates	Parts from -VAS6131/10- , -VAS6131/12- and -VAS6131/13-			
B5	/10-1	/12-2	/10-5	/10-8
G5	/10-1	/12-2	/10-5	/10-8
C8	/10-1	/10-4	/10-5	/10-6
F8	/10-1	/10-4	/10-5	/10-6
A8	/13-4	/10-2	/10-5	/13-2
H8	/13-4	/10-2	/10-5	/13-2
C17	/10-1	/10-3	/10-5	/10-13
F17	/10-1	/10-3	/10-5	/10-13

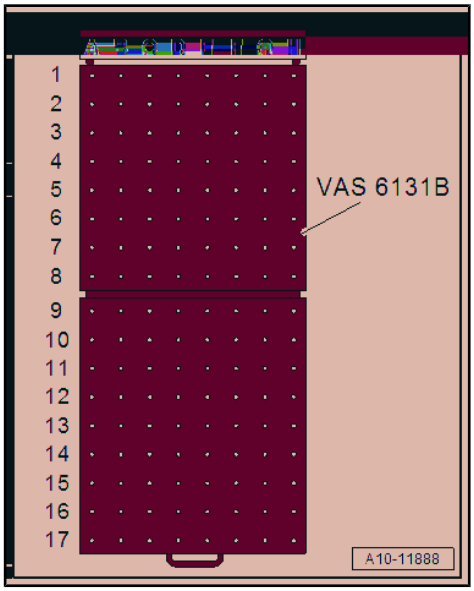

– Secure the mounting elements to the scissor lift table by hand.

– Position the -VAS6131B- so it is level.

• Note the bubble level (sight glass) on support platform.

– Guide the -VAS6131B- under the engine/transmission subassembly.

– Attach mounting elements from the -VAS6131/10- and -VAS6131/13- at the left and right of the control arm, as shown.

– Make sure the threaded spindles are completely screwed in.

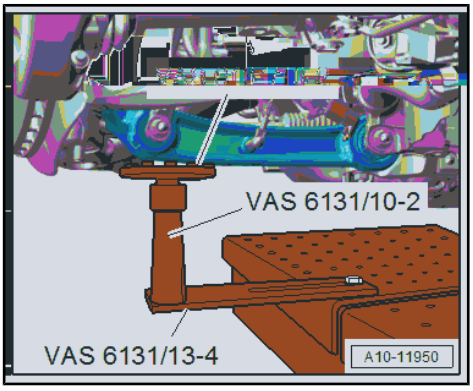

– Position the mounting element from the -VAS6131/10- and -VAS6131/12-2- as shown left and right on the front of the subframe.

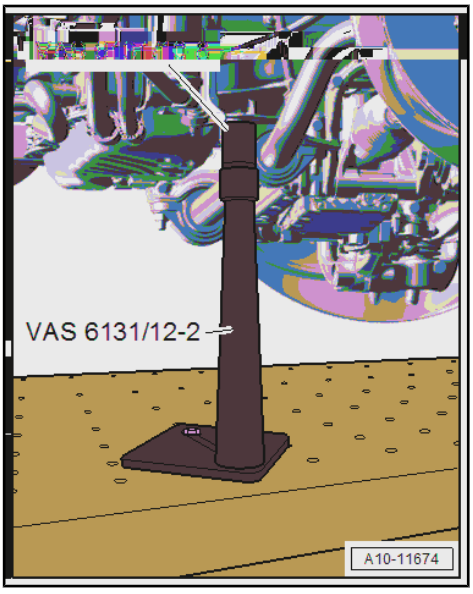

Protected by copyright. Copying for private or commercial purposes, in part or in whole, is not permitted unless authorised by AUDI AG. AUDI AG does not guarantee or accept any liability with respect to the correctness of information in this document. Copyright by AUDI AG.

cardiagn.com

– Install the internal multi-point bolt -arrow- for the crossbrace all the way into the subframe on the left and right sides.
– Attach the mounting elements from the -VAS6131/10- to the internal multi-point bolts for the crossbrace on the left and right sides, as shown.

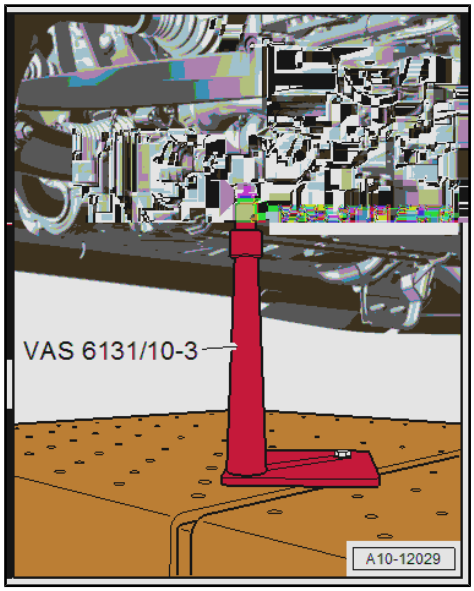

– Position the mounting element from the -VAS6131/10- as shown on the left and right on the tunnel crossmember.
– Rotate all of the mounting element spindles upward until all the mounting pins come in contact with the mounting points.
– Tighten the mounting element base plates to 20 Nm on the -VAS6131B- .
– Secure the subframe. Refer to ⇒ Suspension, Wheels, Steering; Rep. Gr. 40 ; Subframe; Subframe, Lowering .

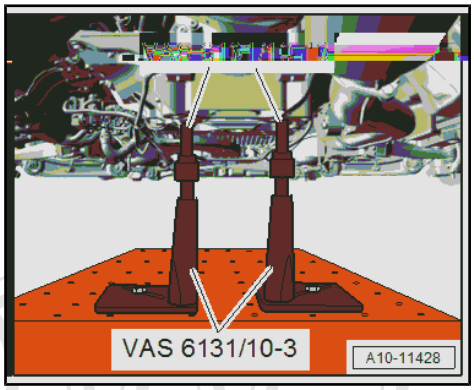

– Remove the bolts -arrows- on the tunnel crossmember.

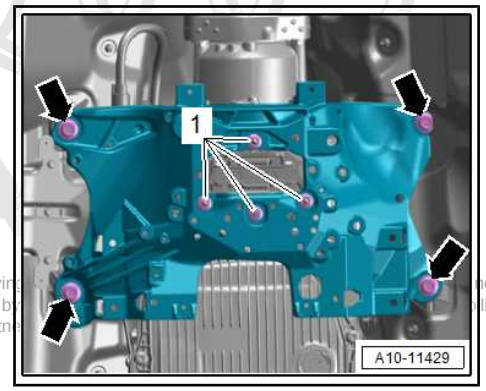

Protected by copyright. Copyin... not permitted unless authorised b... lity with respect to the correctn...
cardiagn.com

– Remove the left and right bolts -3-. (The remaining threaded connections are separated).

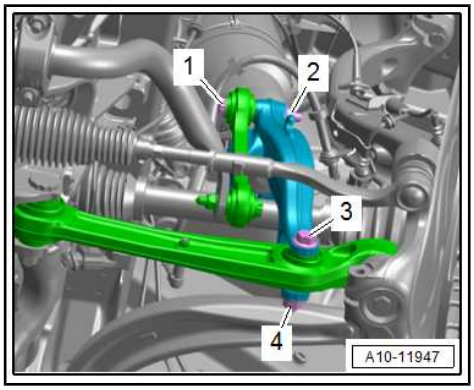

NOTICE

Risk of damaging the lines and hoses, as well as the engine compartment by lowering the engine/transmission assembly.

- **Make sure all connections between the engine, transmission, subframe and body have been disconnected.**
- **Carefully guide the engine/transmission assembly with the subframe out of engine compartment when lowering.**

– Carefully guide the suspension struts on the longitudinal members.

– Lower the -VAS6131B- with the engine/transmission assembly and remove from under the vehicle.

1.2 Engine and Transmission, Separating

⇒ "1.2.1 Engine and Transmission, Separating, Vehicles without High-Voltage System", page 39

Protected by copyright. Copying for private or commercial purposes, in part or in whole, is not permitted unless authorized by AUDI AG. AUDI AG does not guarantee or accept any liability with respect to the correctness of information in this document. Copyright by AUDI AG.

⇒ "1.2.2 Engine and Transmission, Separating, Vehicles with High-Voltage System", page 42

1.2.1 Engine and Transmission, Separating, Vehicles without High-Voltage System

Special tools and workshop equipment required

- ♦ Scissor Lift Table - Audi Set - VAS6131/10-
- ♦ Scissor Lift Table - A8 Set - Adapter - VAS6131/11-1- from Scissor Lift Table - A8 Set - VAS6131/11-
- ♦ Scissor Lift Table - A6 Set - Mounting Pins - VAS6131/12-2- from Scissor Lift Table - A6 Set - VAS6131/12-
- ♦ Hose Clip Pliers - VAS6362-
- ♦ Engine Support - T10533-

Procedure

- Engine/transmission assembly removed and placed on the -VAS6131B- .

– Remove the bolt -3- and the nuts -1 and 2-.

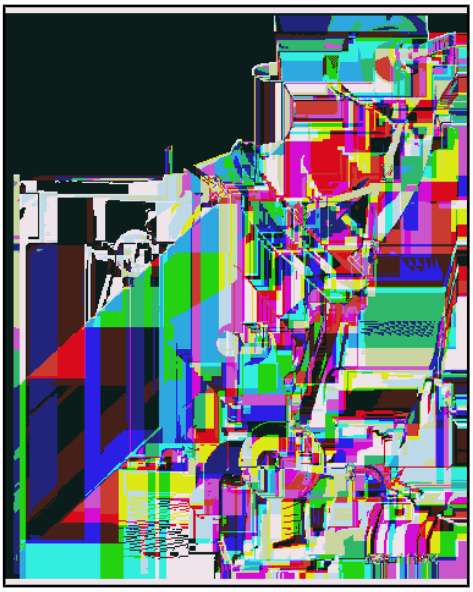

cardiagn.com

– Remove the bolts -arrows- and the front exhaust pipe.

– Remove the left and right drive axles from the flange shaft. Refer to ⇒ Suspension, Wheels, Steering; Rep. Gr. 40 ; Drive Axles; Drive Axles Removing and Installing .

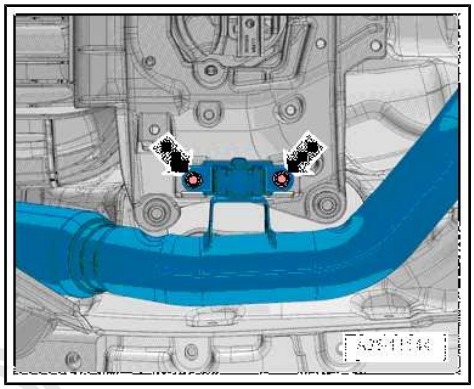

– Loosen the hose clamp -arrow- and remove the coolant hose.

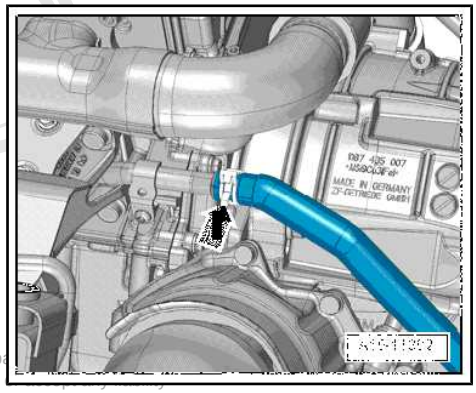

Protected by copyright. Copying for private or commercial purposes, in p
permitted unless authorised by AUDI AG. AUDI AG does not guarantee
with respect to the correctness of information in this document. Copyright by AUDI AG

– Equip the -VAS6131B- with the -VAS6131/10- , -VAS6131/11-1- , -VAS6131/12-2- and -T10533- as follows:

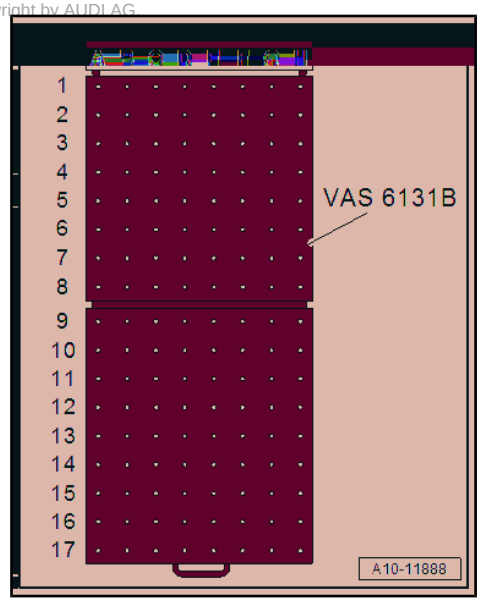

Table Coordinates	Components from the -VAS6131/10- , -VAS6131/11-1- , -VAS6131/12-2- and -T10533/1- with -T10533/5-			
F3	-T10533/1- with -T10533/5-			
C10	/10-1	/10-4	/10-5	/10-12
F10	/10-1	/12-2	/10-5	/11-1
• The remaining mounting elements remain unchanged.				

cardiagn.com

– Tighten the -T10533/1- with the -T10533/5- on the front right of the engine as shown.
– Install the engine support on the - VAS6131B- and tighten it to 20 Nm.

– Attach the mounting elements from the -VAS6131/10- to the transmission on the left as shown.

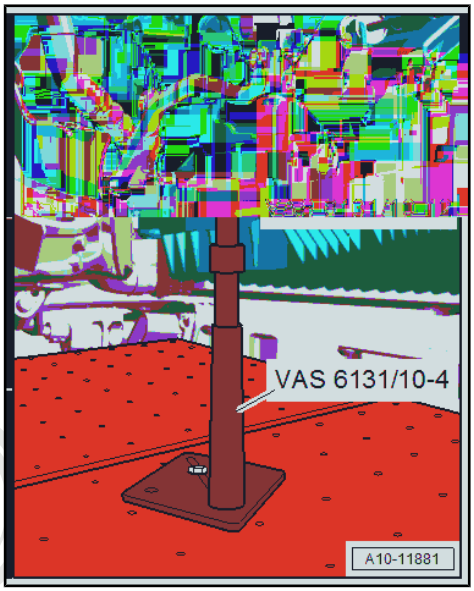

– Position the -VAS6131/11-1- and right -VAS6131/12-2- on the transmission.
– Turn the left and right spindles upward until all the mounting pins come into contact with the mounting points.
– Tighten the mounting element base plates to 20 Nm on the -VAS6131B- .

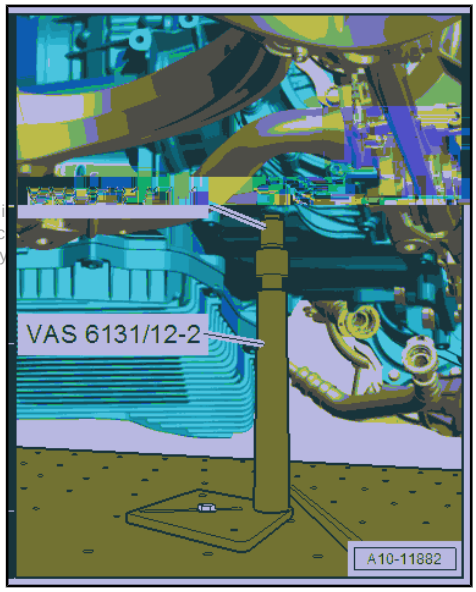

Protected by copyright. Copying for private or commercial purposes, in part or i
permitted unless authorised by AUDI AG. AUDI AG does not guarantee or acc
with respect to the correctness of information in this document. Copyright by

cardiagn.com

– Remove the bolts -2 through 11- that attach the engine to the transmission.
– Loosen the bolt -1- for the starter.

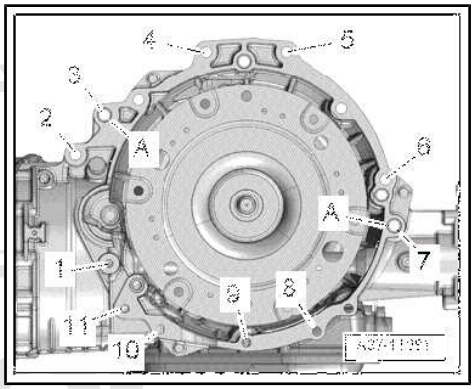

– Loosen the clamping screws on the side of the -VAS6131B- and pull the rear table top with the transmission slightly to the rear in the direction of -arrow-. While doing so, remove the starter bolt completely.
– Pull the transmission all the way to the rear. If necessary, lower it slightly using the front spindles.

Protected by copyright. Copying for private or commercial purposes is not permitted unless authorised by AUDI AG. AUDI AG does not guarantee or accept any liability with respect to the correctness of information in this document.

1.2.2 Engine and Transmission, Separating, Vehicles with High-Voltage System

Special tools and workshop equipment required

- Scissor Lift Table - Audi Set - VAS6131/10-
- (Quantity: 2) Scissor Lift Table - A6 Set - Mounting Pins - VAS6131/12-2- from Scissor Lift Table - A6 Set - VAS6131/12-
- Hose Clip Pliers - VAS6362-
- Engine Support - T10533-

Procedure

• Engine/transmission assembly removed and placed on the -VAS6131B- .
– Loosen the hose clamp -arrow-, and remove the coolant hose from the left coolant pipe.

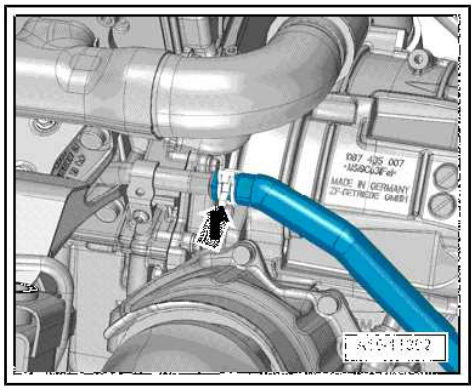

cardiagn.com

– Disconnect the connector -1-.

– Remove the bolts -arrows- and remove the transmission support -2- with the transmission mount.

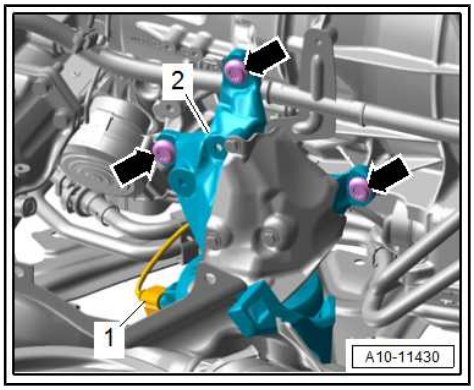

– Remove the bolts -arrows- and remove the heat shield -1-.

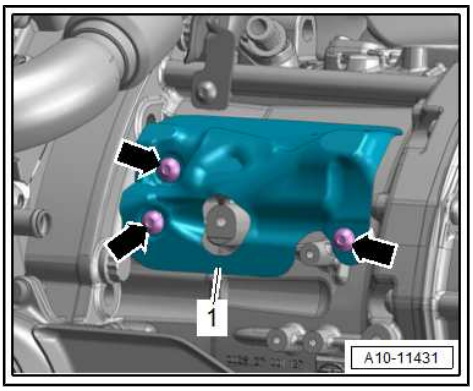

– Remove the bolts -arrows- from the bracket for the high-voltage cable.

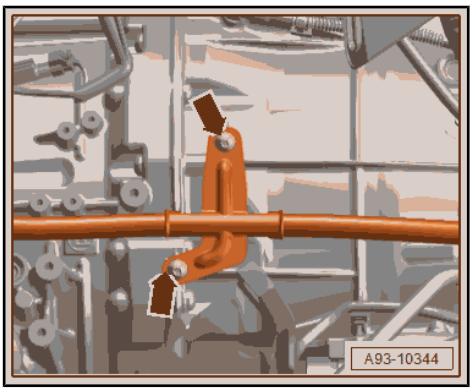

Protected by copyright. Copying for private or commercial purposes, in part or in whole, is not permitted unless authorised by AUDI AG. AUDI AG does not guarantee or accept any liability with respect to the correctness of information in this document. Copyright by AUDI AG.

– Remove the bolts -arrows- and nuts -2-.

– Free up the Electrical A/C Compressor High-Voltage Cable -P3- -1- on the transmission.

cardiagn.com

– Remove the bolts -arrows-.

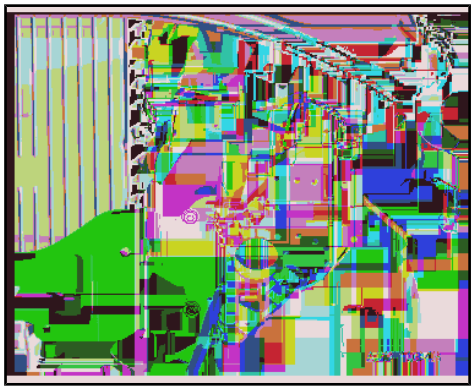

– Free up the wires.

– Tie up the bracket with the NOx Sensor Control Module 2 - J881- and Particulate Sensor - G784- to the front exhaust pipe.

– Release the retainer in the direction of -arrow B- and remove the NOx Sensor Control Module 2 - J881- -2- from the bracket -3-.

– Free up the wires on the tunnel crossmember.

Protected by copyright. Copying for private or commercial purposes, in part or in whole, is not permitted unless authorised by AUDI AG. AUDI AG does not guarantee or accept any liability with respect to the correctness of information in this document. Copyright by AUDI AG.

– Remove the bolt -3- and the nuts -1 and 2-.

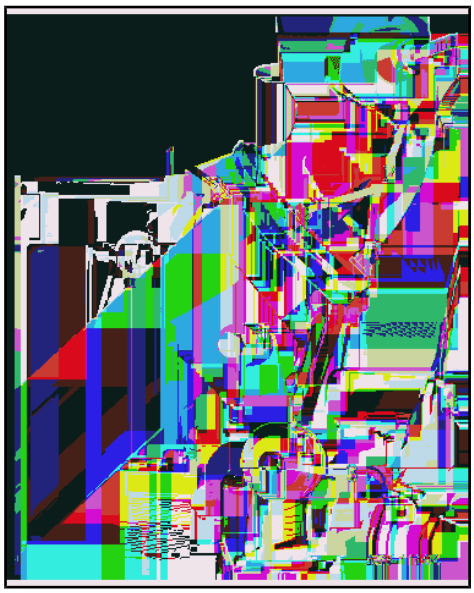

– Remove the bolts -arrows- and the front exhaust pipe.

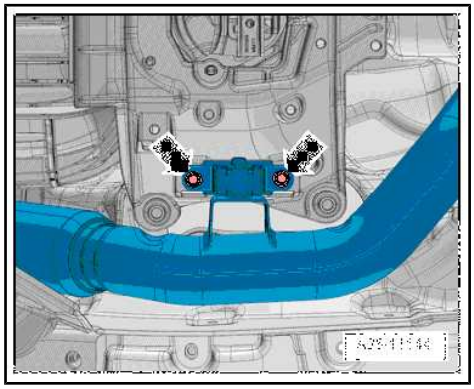

cardiagn.com

– Remove the bolts -arrows-.

– Loosen the hose clamp -1-, remove the coolant hose and push the heat shield -2- slightly to the side.

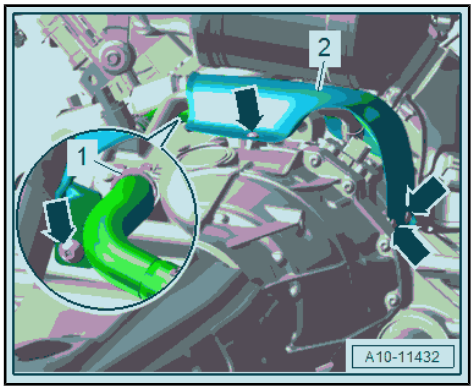

– Open the clip -1- and free up the coolant hose.

– Remove the bolts -arrows- and remove the transmission support -2- with the transmission mount.

– Remove the left and right drive axles from the flange shaft. Refer to ⇒ Suspension, Wheels, Steering; Rep. Gr. 40 ; Drive Axles; Drive Axles Removing and Installing .

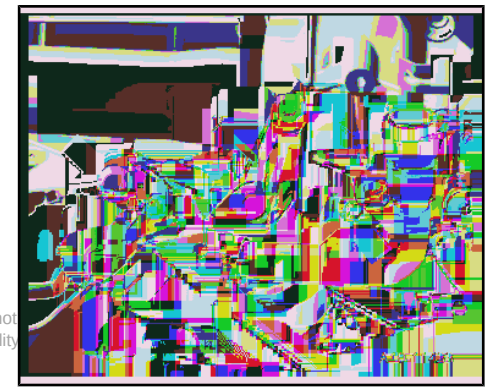

Protected by copyright. Copying for private or commercial purposes, in part or in whole, is not permitted unless authorised by AUDI AG. AUDI AG does not guarantee or accept any liability with respect to the correctness of information in this document. Copyright by AUDI AG.

– Equip the -VAS6131B- with the -VAS6131/10- and -VAS6131/12-1- and -T10533- as follows:

Table Coordinates	Components from the -VAS6131/10- , -VAS6131/12-1- and - T10533/1- with -T10533/5-			
F3	-T10533/1- with -T10533/5-			
C12	/10-1	/10-4	/10-5	/12-1
F10	/10-1	/10-4	/10-5	/12-1
• The remaining mounting elements remain unchanged.				

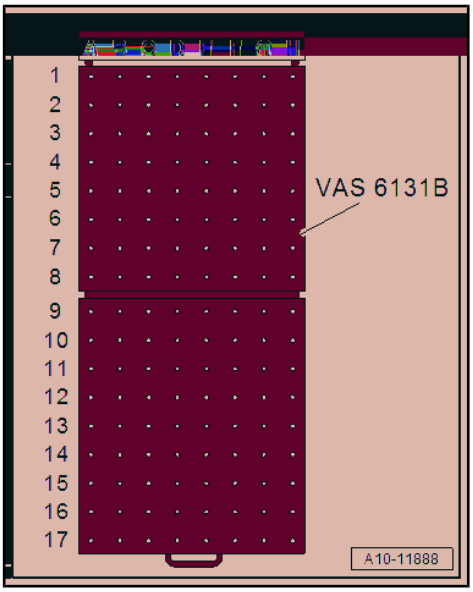

cardiagn.com

– Tighten the -T10533/1- with the -T10533/5- on the front right of the engine as shown.

– Install the engine support on the - VAS6131B- and tighten it to 20 Nm.

– Place the mounting element from the -VAS6131/10- and -VAS6131/12-1- on the left of the transmission.

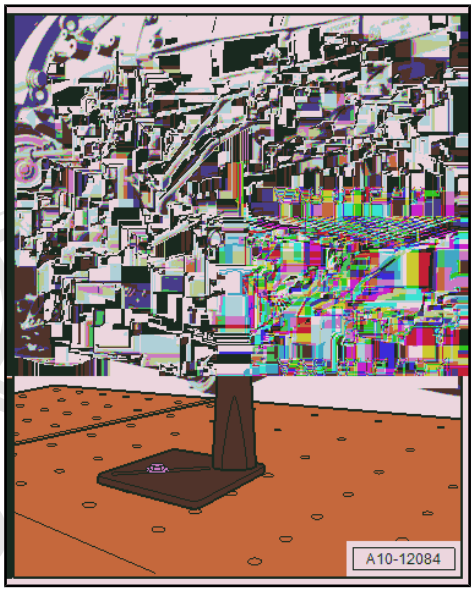

– Place the mounting element from the -VAS6131/10- and -VAS6131/12-1- on the right of the transmission.

– Turn the left and right spindles upward until all the mounting pins come into contact with the mounting points.

– Tighten the mounting element base plates to 20 Nm on the Scissor Lift Table - VAS6131B- .

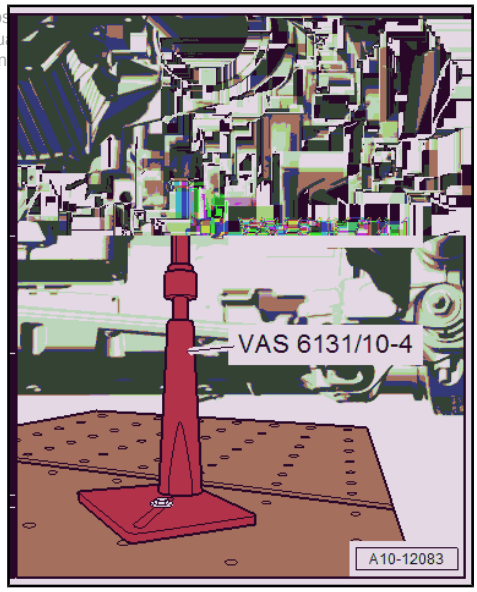

cardiagn.com

– Remove the bolts -2 to 10- that connect the engine to the Three-Phase Current Drive - VX54- .
– Loosen the bolt -1- for the starter installation opening cover.

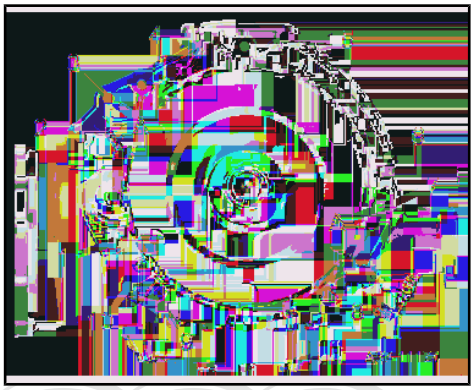

– Loosen the clamping screws on the side of the -VAS6131B- and pull the rear table top with the transmission slightly to the rear in direction of -arrow-. While doing so, remove the bolt for the starter installation opening cover completely.
– Pull the transmission with the Three-Phase Current Drive - VX54- all the way to the rear. If necessary, lower it slightly using the front spindles.
– Remove the cover for the starter installation opening.

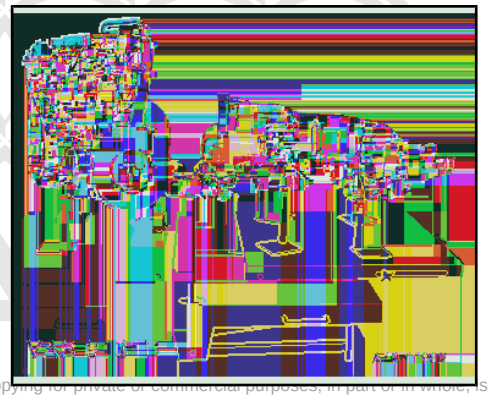

Protected by copyright. Copying for private or commercial purposes, in part or in whole, is not permitted unless authorised by AUDI AG. AUDI AG does not guarantee or accept any liability with respect to the correctness of information in this document. Copyright by AUDI AG.

1.3 Engine, Securing to Engine and Transmission Holder

Special tools and workshop equipment required

- Lifting Tackle - 3033-
- Engine and Gearbox Bracket VAS6095A - VAS6095A-
- Engine/Transmission Holder - Universal Mounting - VAS6095/1- and Engine and Transmission Holder - Bracket (V6 TDI Engine) - VAS6095/1-14-
- Shop Crane - VAS6100-
- Lift Arm Extension - VAS6101-

Procedure

- Engine/transmission assembly removed and separated on - VAS6131B- .
- Engine secured with the -T10533/1- with -T10533/5- .

cardiagn.com

– Attach the -VAS6101- to the -VAS6100- .
– Engage the -3033- on the engine lifting eyes and on the shop crane as shown.
– Tension the engine slightly with the shop crane, but do not lift.

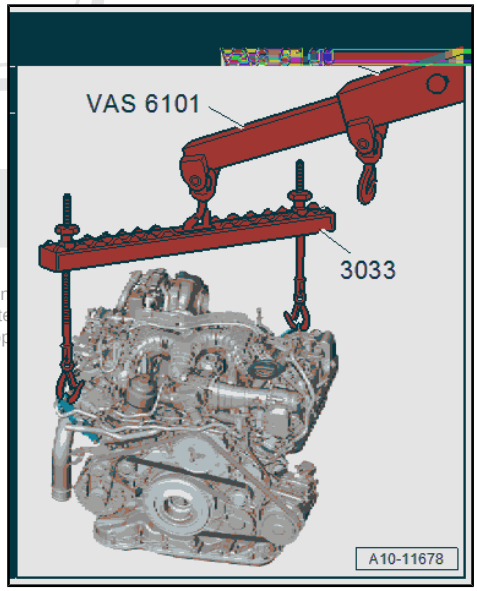

Protected by copyright. Copying for private or commercial purposes, in
permitted unless authorised by AUDI AG. AUDI AG does not guarante
with respect to the correctness of information in this document. Cop

– Remove the bolt -1-.
– Release the catches -arrows- and free up the bracket -2- for the wires from the subframe.

– Vehicles with high-voltage system: Disconnect the left and right connector -1- on the sensor with the subframe mount actuator.

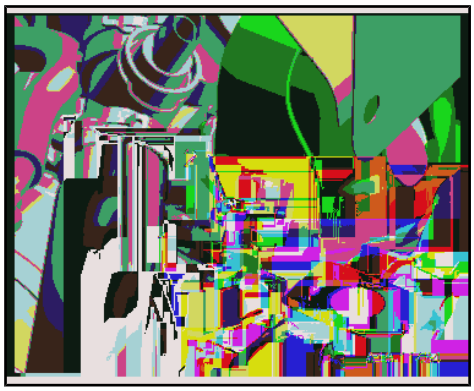

– Remove engine bracket left and right bolt -arrow-. (Shown with the engine installed.)

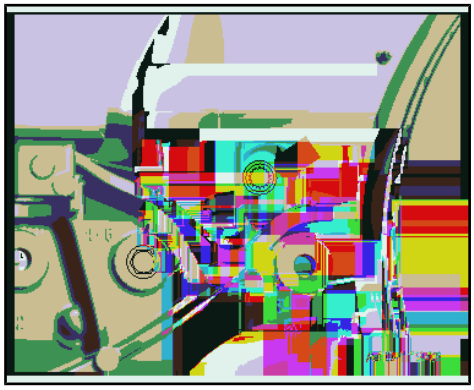

cardiagn.com

– Remove the -T10533/1- with -T10533/5- from the engine.
– Lift the engine from the subframe.

– Remove the bolts -arrows-, the left engine support -1- and at the same time on a vehicle with a high-voltage system, free up the high-voltage cable.

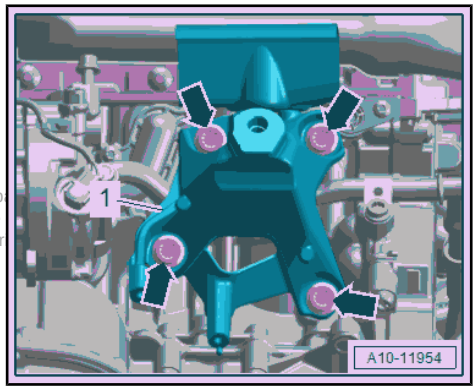

Protected by copyright. Copying for private or commercial purposes, in p
permitted unless authorised by AUDI AG. AUDI AG does not guarantee
with respect to the correctness of information in this document. Copyr

– Remove the bolts -arrows-.
– Remove the left coolant pipe -1- and move to the side.

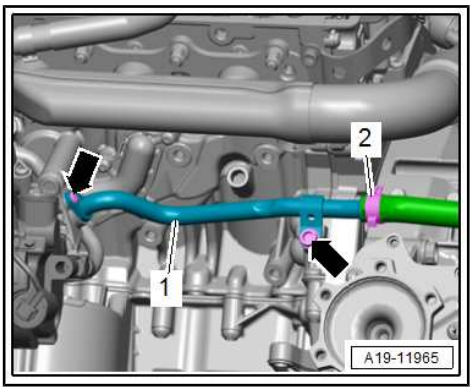

– Remove the ground cable bolt -2-.
– Remove the bolts -arrows- and remove the right engine support -1-.
– Vehicle without high-voltage system: secure the starter on the engine.

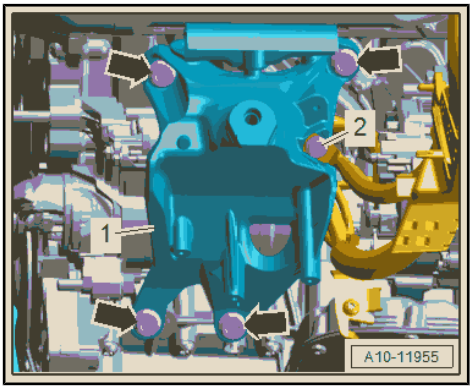

cardiagn.com

– Secure the engine to the -VAS6095A- using the -VAS6095/1- and -VAS6095/1-14- and tighten to 40 Nm, as shown.

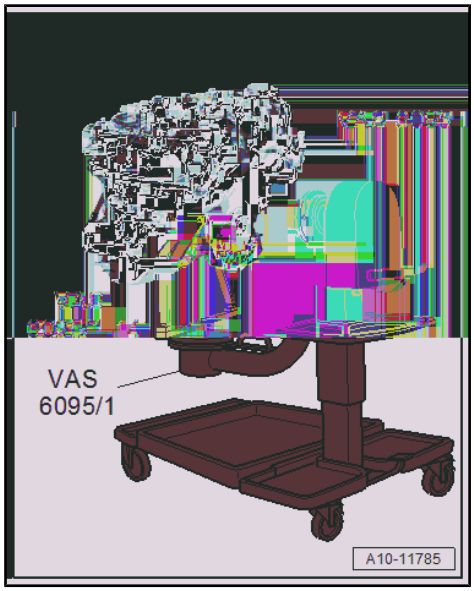

1.4 Engine, Installing

⇒ “1.4.1 Engine, Installing, Vehicle without High-Voltage System”, page 50

⇒ “1.4.2 Engine, Installing, Vehicle with High-Voltage System”, page 56

1.4.1 Engine, Installing, Vehicle without High-Voltage System

Special tools and workshop equipment required

- Torque Wrench 1332 Insert - Ring Wrench - 16mm - VAG1332/14-
- Clutch Module Transportation Lock - T40170-
- As well as when removing with listed special tools
- Cleaning Solution - D 009 401 04-
- Universal Adhesive - D 001 200 M2-

Tightening Specifications

- The tightening specifications only apply to lightly greased, oiled, phosphated or blackened nuts and bolts.
- Additional lubricants, such as engine or transmission oil are permitted, although lubricants containing graphite are not.
- Do not use any ungreased parts.
- Tightening specification tolerance: ±15%.

Component		Nm
Bolts and nuts	M6	9
	M7	15
	M8	20
	M10	40
	M12	65

- Refer to ⇒ “2.1 Overview - Subframe Mount”, page 61

Protected by copyright. Copying for private or commercial purposes, in part or in whole, is not permitted unless authorised by AUDI AG. AUDI AG does not guarantee or accept any liability with respect to the correctness of information in this document. Copyright by AUDI AG.

cardiagn.com

♦ Engine to transmission. Refer to ⇒ 8-Speed Automatic Transmission; Rep. Gr. 37 ; Transmission, Removing and Installing; Transmission Tightening Specifications .

Procedure

- Replace the bolts that were tightened with an additional turn after removing them.
- Replace the self-locking nuts and bolts, gaskets, seals and O-rings after removing.
- Only remove the plugs or caps just before installing the respective lines.
- The hose connections as well as air duct pipes and hoses must be free of oil and grease before installing.
- Secure all hose connections with hose clamps that match the ones used in series production. Refer to the Parts Catalog.
- The securing components for the wires must correspond to the production series. Refer to Parts Catalog.
- Used coolant cannot be used again.
- Bonded rubber bushings have a limited range of rotation. Only tighten suspension threaded connections when vehicle is in curb weight position or in the control position.

– Install the left coolant pipe. Refer to ⇒ “3.2.3 Left Coolant Pipe, Removing and Installing”, page 184 .

– Install the engine support. Refer to ⇒ “2.1 Overview - Subframe Mount”, page 61 .

– Support the engine with the subframe on the -VAS6131B- and secure using the -T10533/1- with -T10533/5- .

– Install the engine mount and support bearing. Refer to ⇒ “2.1 Overview - Subframe Mount”, page 61 .

– The following preparations must be made before connecting the engine and transmission:

– Clean the contact surface -1- on the lower cover for the timing chain and on the locking piece -2- with Cleaning Solution - D 009 401 04- .

– Attach the locking piece to the lower timing chain cover using the Universal Adhesive - D 001 200 M2- . While doing so, pay attention to the directions.

– Bring the starter into the installation position.

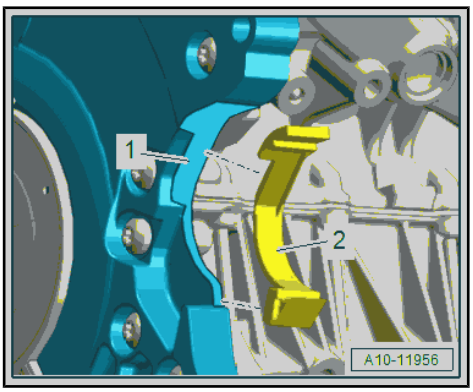

Protected by copyright. Copying for private or commercial purposes, in part or in whole, is not permitted unless authorised by AUDI AG. AUDI AG does not guarantee or accept any liability with respect to the correctness of information in this document. Copyright by AUDI AG.
cardiagn.com

– Insert the -T40170- in the transmission housing from below and secure it on the flange shaft -1-.

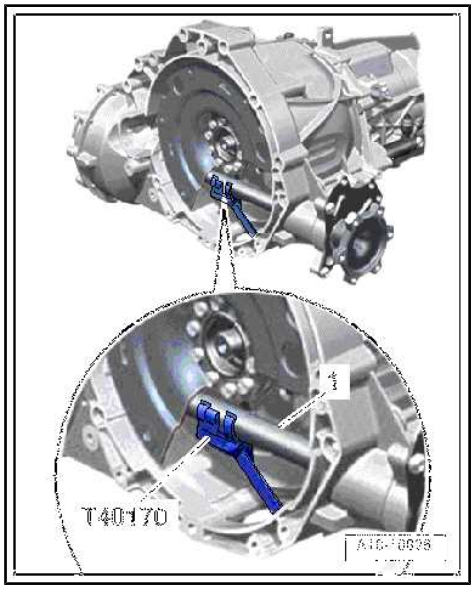

– Check if the alignment sleeves -A- for centering the engine and transmission in the cylinder block are installed.

– Inspect the aluminum bolts used to connect the engine to the transmission to check if they can be used again and mark them if necessary. Refer to ⇒ 8-Speed Automatic Transmission; Rep. Gr. 37 ; Transmission, Removing and Installing; Transmission Tightening Specifications .

• When guiding together the engine and transmission make sure that the locking piece is seated correctly.

– Place the transmission on the engine and at the same time turn the bolt -1- for the starter.

– Install the bolts -2 to 11- all the way by hand.

– Tighten the bolts -1 to 11-.

– Remove the -T40170- and -T10533/1- with the -T10533/5- .

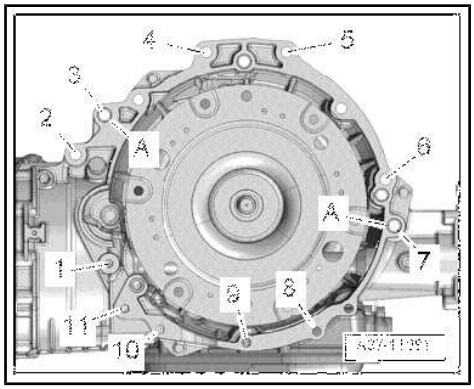

• The following step is necessary to make sure the torque converter rests on the drive plate evenly and is not tilted.

– Press the torque converter -2- slightly in against the drive plate -3- in the direction of -arrow- using an assembly lever -1-.

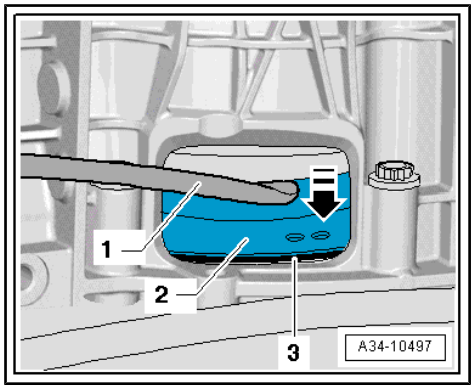

Protected by copyright. Copying for private or commercial purposes, in part or in whole, is not permitted unless authorised by AUDI AG. AUDI AG does not guarantee or accept any liability with respect to the correctness of information in this document. Copyright by AUDI AG.

cardiagn.com

– Attach the torque converter to the drive plate as follows:
– Turn the torque converter so that hole next to the notch -arrow- is visible in the lower cut-out in the transmission housing as shown.

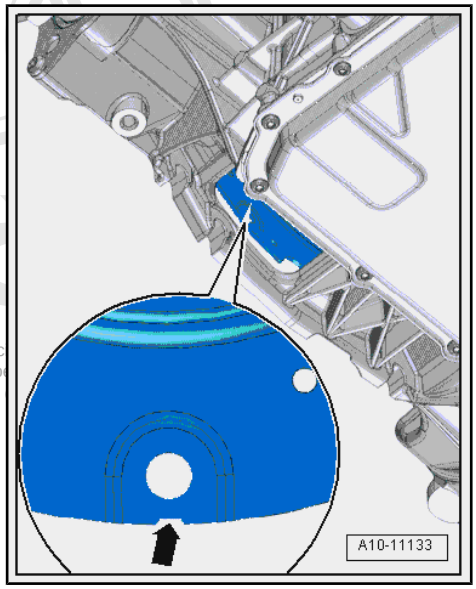

TIP:

There is only one notch on the circumference, so rotate the torque converter as needed.

Protected by copyright. Copying for private or commerc
permitted unless authorised by AUDI AG. AUDI AG do
with respect to the correctness of information in this

– Tighten the bolts -arrow- for the torque converter -1- that are accessible in this position. Refer to ⇒ 8-Speed Automatic Transmission; Rep. Gr. 32 ; Torque Converter; Overview - Torque Converter .

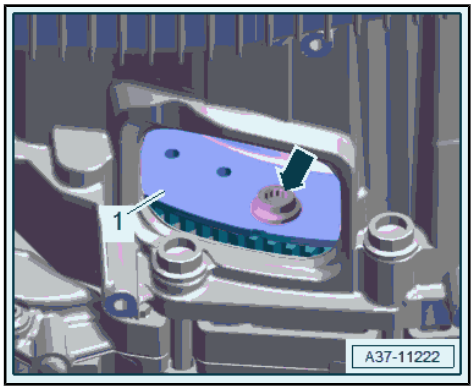

Use the -VAG1332/14- to tighten the bolts.

cardiagn.com

NOTICE

Risk of damaging the engine by the timing mechanism skipping.

– Only let the engine turn in the direction of engine rotation.

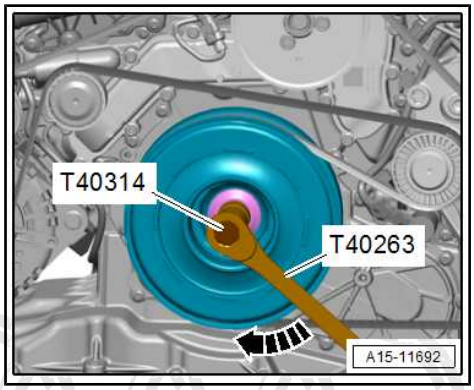

- Then turn the crankshaft 60° farther -arrow- and tighten the remaining five bolts to the tightening specification. Refer to ⇒ 8-Speed Automatic Transmission; Rep. Gr. 32 ; Torque Converter; Overview - Torque Converter .
- Tighten the drive axles. Refer to ⇒ Suspension, Wheels, Steering; Rep. Gr. 40 ; Drive Axle; Overview - Drive Axle .
- Install the front exhaust pipe. Refer to ⇒ "1.2 Front Exhaust Pipe, Removing and Installing", page 259 .
- Guide the engine/transmission assembly into the body.
- Tighten the tunnel crossmember bolts. Refer to ⇒ 8-Speed Automatic Transmission; Rep. Gr. 37 ; Subframe Mount; Overview - Subframe Mount .
- Remove the subframe locating pin. Refer to ⇒ Suspension, Wheels, Steering; Rep. Gr. 40 ; Subframe; Subframe, Securing .

Further installation is performed in reverse order of removal, while noting the following:

- Install the parking lock emergency release cable. Refer to ⇒ 8-Speed Automatic Transmission; Rep. Gr. 37 ; Selector Mechanism .
- Install the ATF cooler. Refer to ⇒ 8-Speed Automatic Transmission; Rep. Gr. 37 ; ATF Circuit; ATF Cooler, Removing and Installing .
- Install the A/C compressor. Refer to ⇒ Heating, Ventilation and Air Conditioning; Rep. Gr. 87 ; A/C Compressor; Overview - A/C Compressor Power Unit .
- Install the bracket with the NOx Sensor Control Module 2 -J881- and Particulate Sensor - G784- . Refer to ⇒ Fig. ""Bracket for NOx Sensor Control Module 2 -J881- and Particulate Sensor -G784- - Tightening Specification"" , page 249 .
- Attach the steering intermediate shaft to the steering gear. Refer to ⇒ Suspension, Wheels, Steering; Rep. Gr. 48 ; Steering Column; Steering Intermediate Shaft, Removing and Installing .
- Install the upper control arm and suspension strut. Refer to ⇒ Suspension, Wheels, Steering; Rep. Gr. 40 ; Suspension Strut, Upper Control Arm; Overview - Suspension Strut, Upper Control Arm .
- Install the subframe crossbrace, stabilizer bar, shield and bracket for the electrical wires. Refer to ⇒ Suspension, Wheels, Steering; Rep. Gr. 40 ; Subframe; Overview - Subframe .
- Install the brake caliper. Refer to ⇒ Brake System; Rep. Gr. 46 ; Front Brakes; Brake Caliper, Removing and Installing .
- Install the parking heater exhaust pipe. Refer to ⇒ Heating, Ventilation, and Air Conditioning; Rep. Gr. 82 ; Parking/Auxiliary Heater; Component Location Overview - Parking/Auxiliary Heater .

Protected by copyright. Copying for private or commercial purposes, in part or in whole, is not permitted unless authorised by AUDI AG. AUDI AG does not guarantee or accept any liability with respect to the correctness of information in this document. Copyright by AUDI AG.

cardiagn.com

- Bring the NOx Sensor Control Module - J583- into the installation position and secure it.
- Install the engine control module. Refer to ⇒ “9.2 Engine Control Module J623 , Removing and Installing”, page 253 .
- Install the Differential Pressure Sensor - G505- . Refer to ⇒ Fig. ““ Differential Pressure Sensor -G505- - Tightening Specification”“ , page 248 .
- Disconnect the SCR delivery line. Refer to ⇒ Servicing – 6-Cylinder TDI Common Rail Engine; Rep. Gr. 26 ; SCR System (Selective Catalytic Reduction); Overview - Reducing Agent Delivery Line .
- Connections and wire routing. Refer to ⇒ Wiring diagrams, Troubleshooting & Component locations.
- Follow all steps after connecting the battery. Refer to ⇒ Electrical Equipment; Rep. Gr. 27 ; Battery; Battery, Disconnecting and Connecting .
- Install the engine covers. Refer to ⇒ “3.1 Engine Cover, Removing and Installing”, page 77 .
- Connect the fuel hoses. Refer to ⇒ Fuel Supply System; Rep. Gr. 20 ; Connector Couplings; Connector Couplings, Disconnecting .
- Install the air filter housing. Refer to ⇒ “3.2 Air Filter Housing, Removing and Installing”, page 229 .
- Fill with engine oil and check the oil level. Refer to ⇒ Maintenance ; Booklet 413.
- Install the coolant expansion tank. Refer to ⇒ Fig. ““Coolant Expansion Tank - Tightening Specification”“ , page 182 .
- Connect the coolant hoses with the connector coupling. Refer to ⇒ Fig. ““Connect the Coolant Hose to the Connector Coupling”“ , page 189 .
- Fill with coolant. Refer to ⇒ “1.3.1 Coolant, Draining and Filling, Vehicle without High-Voltage System, Engine Coolant Circuit”, page 140 .
- Install the driveshaft. Refer to ⇒ Rear Final Drive; Rep. Gr. 39 ; Driveshaft; Driveshaft, Removing and Installing .
- Install the lower longitudinal member. Refer to ⇒ Body Exterior; Rep. Gr. 50 ; Lock Carrier; Overview - Lock Carrier .
- Install the wheel housing liners. Refer to ⇒ Body Exterior; Rep. Gr. 66 ; Wheel Housing Liner; Overview - Front Wheel Housing Liner .
- Mount the front wheels. Refer to ⇒ Suspension, Wheels, Steering; Rep. Gr. 44 ; Wheels, Tires .
- Bleed the fuel system. Refer to ⇒ Servicing – 6-Cylinder TDI Common Rail Engine; Rep. Gr. 23 ; Injection System; Fuel System, Filling and Bleeding .
- Check the ATF level. Refer to ⇒ 8-Speed Automatic Transmission; Rep. Gr. 37 ; ATF; ATF Level, Checking .
- Install the noise insulations. Refer to ⇒ Body Exterior; Rep. Gr. 66 ; Noise Insulation; Overview - Noise Insulation .

Protected by copyright. Copying for private or commercial purposes, in part or in whole, is not permitted unless authorised by AUDI AG. AUDI AG does not guarantee or accept any liability with respect to the correctness of information. Copyright by AUDI AG.

cardiagn.com

1.4.2 Engine, Installing, Vehicle with High-Voltage System

Special tools and workshop equipment required

- Torque Wrench 1332 Insert - Ring Wrench - 16mm - VAG1332/14-
- Scissor Lift Table - VAS6131B-
- Engine Support - T10533/1-
- Engine Support - Threaded Rod - T10533/5-
- Three-Phase Current Drive - VX54-
- As well as when removing with listed special tools
- Cleaning Solution - D 009 401 04-
- Universal Adhesive - D 001 200 M2-

Tightening Specifications

- The tightening specifications only apply to lightly greased, oiled, phosphated or blackened nuts and bolts.
- Additional lubricants, such as engine or transmission oil are permitted, although lubricants containing graphite are not.
- Do not use any ungreased parts.
- Tightening specification tolerance: ±15%.

Component		Nm
Bolts and nuts	M6	9
	M7	15
	M8	20
	M10	40
	M12	65

- Refer to ⇒ “2.1 Overview - Subframe Mount”, page 61
- Engine and transmission with Three-Phase Current Drive - VX54- . Refer to ⇒ “5.1 Overview - Electric Drive Motor”, page 327.

Protected by copyright. Copying for private or commercial purposes, in part or in whole, is not permitted unless authorised by AUDI AG. AUDI AG does not guarantee or accept any liability with respect to the correctness of information in this document. Copyright by AUDI AG.

Procedure

- Replace the bolts that were tightened with an additional turn after removing them.
- Replace the self-locking nuts and bolts, gaskets, seals and O-rings after removing.
- Only remove the plugs or caps just before installing the respective lines.
- The hose connections as well as air duct pipes and hoses must be free of oil and grease before installing.
- Secure all hose connections with hose clamps that match the ones used in series production. Refer to the Parts Catalog.
- The securing components for the wires must correspond to the production series. Refer to Parts Catalog.
- Used coolant cannot be used again.
- Bonded rubber bushings have a limited range of rotation. Only tighten suspension threaded connections when vehicle is in curb weight position or in the control position.

cardiagn.com

– Install the left coolant pipe. Refer to ⇒ “3.2.3 Left Coolant Pipe, Removing and Installing”, page 184 .
– Install the engine support. Refer to ⇒ “2.1 Overview - Subframe Mount”, page 61 .
– Support the engine with the subframe on the -VAS6131B- and secure using the -T10533/1- with -T10533/5- .
– Install the engine mount and support bearing. Refer to ⇒ “2.1 Overview - Subframe Mount”, page 61 .
– The following preparations must be made before connecting the engine and transmission Three-Phase Current Drive -VX54- :
– Clean the contact surface -1- on the lower cover for the timing chain and on the locking piece -2- with Cleaning Solution - D 009 401 04- .
– Attach the locking piece to the lower timing chain cover using the Universal Adhesive - D 001 200 M2- . While doing so, pay attention to the directions.
– Bring the cover for the starter installation opening into the installation position.

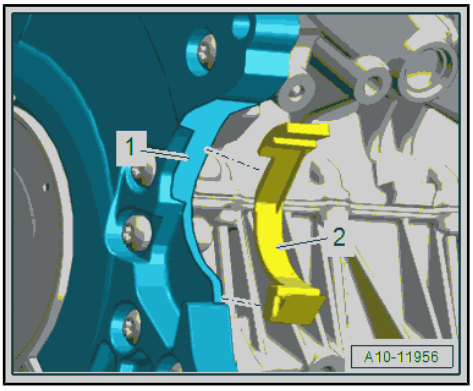

Protected by copyright. Copying for private or commercial purposes, in part or in whole, is not permitted unless authorised by AUDI AG. AUDI AG does not guarantee or accept any liability with respect to the correctness of information in this document. Copyright by AUDI AG.

cardiagn.com

- Check if the alignment sleeves -A- for centering the engine and transmission in the cylinder block are installed.
- Inspect the aluminum bolts used to connect the engine to the transmission to see if they can be used again and mark them, if necessary. Refer to ⇒ page 329 .
- When guiding together the engine and transmission with the Three-Phase Current Drive - VX54- make sure that the locking piece is seated correctly.
- Place the transmission with the Three-Phase Current Drive - VX54- on the engine and at the same time install the bolt -1- for the cover for the starter installation opening.
- Install the bolts -2 to 10- all the way by hand.
- Tighten the bolts -1 to 10-. Refer to ⇒ Fig. ““ Three-Phase Current Drive -VX54- - Tightening Specifications”“ , page 329 .
- Remove the -T10533/1- with -T10533/5- .
- Tighten the torsion dampers. Refer to ⇒ “5.1 Overview - Electric Drive Motor”, page 327 .
- Tighten the drive axles. Refer to ⇒ Suspension, Wheels, Steering; Rep. Gr. 40 ; Drive Axle; Overview - Drive Axle .
- Install the front exhaust pipe. Refer to ⇒ “1.2 Front Exhaust Pipe, Removing and Installing”, page 259 .
- Install the bracket with the NOx Sensor Control Module 2 - J881- and Particulate Sensor - G784- . Refer to ⇒ Fig. ““Bracket for NOx Sensor Control Module 2 -J881- and Particulate Sensor -G784- - Tightening Specification”“ , page 249 .
- Install the Electrical A/C Compressor High-Voltage Cable - P3- . Refer to ⇒ “6.4 Electrical A/C Compressor High-Voltage Cable, Removing and Installing”, page 356 .
- Install the heat shield. Refer to ⇒ “5.1 Overview - Electric Drive Motor”, page 327 .
- Install the transmission support with the transmission mount. Refer to ⇒ 8-Speed Automatic Transmission; Rep. Gr. 37 ; Subframe Mount; Overview - Subframe Mount .
- Guide the engine/transmission assembly into the body.
- Tighten the tunnel crossmember bolts. Refer to ⇒ 8-Speed Automatic Transmission; Rep. Gr. 37 ; Subframe Mount; Overview - Subframe Mount .
- Remove the subframe locating pin. Refer to ⇒ Suspension, Wheels, Steering; Rep. Gr. 40 ; Subframe; Subframe, Securing .

Further installation is performed in reverse order of removal, while noting the following:

- Install the parking lock emergency release cable. Refer to ⇒ 8-Speed Automatic Transmission; Rep. Gr. 37 ; Selector Mechanism .
- Install the ATF cooler. Refer to ⇒ 8-Speed Automatic Transmission; Rep. Gr. 37 ; ATF Circuit; ATF Cooler, Removing and Installing .

Protected by copyright. Copying for private or commercial purposes, in part or in whole, is not permitted unless authorised by AUDI AG. AUDI AG does not guarantee or accept any liability with respect to the correctness of information in this document.

cardiagn.com

- Install the Drive Motor High-Voltage Wiring Harness - PX2- . Refer to ⇒ “6.3 Drive Motor High-Voltage Wiring Harness, Removing and Installing”, page 352 .
- Install the transmission mount. Refer to ⇒ 8-Speed Automatic Transmission; Rep. Gr. 37 ; Subframe Mount; Overview - Subframe Mount .
- Attach the steering intermediate shaft to the steering gear. Refer to ⇒ Suspension, Wheels, Steering; Rep. Gr. 48 ; Steering Column; Steering Intermediate Shaft, Removing and Installing .
- Install the upper control arm and suspension strut. Refer to ⇒ Suspension, Wheels, Steering; Rep. Gr. 40 ; Suspension Strut, Upper Control Arm; Overview - Suspension Strut, Upper Control Arm .
- Install the subframe crossbrace, stabilizer bar, shield and bracket for the electrical wires. Refer to ⇒ Suspension, Wheels, Steering; Rep. Gr. 40 ; Subframe; Overview - Subframe .
- Install the brake caliper. Refer to ⇒ Brake System; Rep. Gr. 46 ; Front Brakes; Brake Caliper, Removing and Installing .
- Install the Electrical A/C Compressor - V470- . Refer to ⇒ Heating, Ventilation and Air Conditioning; Rep. Gr. 87 ; A/C Compressor; Overview - A/C Compressor Power Unit .
- Install the parking heater exhaust pipe. Refer to ⇒ Heating, Ventilation, and Air Conditioning; Rep. Gr. 82 ; Parking/Auxiliary Heater; Component Location Overview - Parking/Auxiliary Heater .
- Install the NOx Sensor Control Module - J583- . Refer to ⇒ Fig. “” NOx Sensor Control Module -J583- - Tightening Specification”“ , page 248 .
- Install the engine control module. Refer to ⇒ “9.2 Engine Control Module J623 , Removing and Installing”, page 253 .
- Install the Differential Pressure Sensor - G505- . Refer to ⇒ Fig. “” Differential Pressure Sensor -G505- - Tightening Specification”“ , page 248 .
- Disconnect the SCR delivery line. Refer to ⇒ Servicing – 6-Cylinder TDI Common Rail Engine; Rep. Gr. 26 ; SCR System (Selective Catalytic Reduction); Overview - Reducing Agent Delivery Line .
- Connections and wire routing. Refer to ⇒ Wiring diagrams, Troubleshooting & Component locations.
- Install the engine covers. Refer to ⇒ “3.1 Engine Cover, Removing and Installing”, page 77 .
- Connect the fuel hoses. Refer to ⇒ Fuel Supply System; Rep. Gr. 20 ; Connector Couplings; Connector Couplings, Disconnecting .
- Install the air filter housing. Refer to ⇒ “3.2 Air Filter Housing, Removing and Installing”, page 229 .
- Fill with engine oil and check the oil level. Refer to ⇒ Maintenance ; Booklet 413 .
- Follow all steps after connecting the battery. Refer to ⇒ Electrical Equipment; Rep. Gr. 27 ; Battery; Battery, Disconnecting and Connecting .

Protected by copyright. Copying for private or commercial purposes, in part or in whole, is not permitted without prior written consent of AUDI AG. AUDI AG does not guarantee or accept any liability with respect to the correctness of information in this document. Copyright by AUDI AG.

cardiagn.com

WARNING

Extremely dangerous due to high-voltage.

Severe bodily injury or death by electrocution is possible.

– Have a qualified person put the high-voltage system back into service.

– Re-energize the high-voltage system. Refer to ⇒ “8 High-Voltage System, Re-Energizing”, page 366 .

– Install the coolant expansion tank. Refer to ⇒ Fig. ““Coolant Expansion Tank - Tightening Specification”“ , page 182 .

– Connect the coolant hoses with the connector coupling. Refer to ⇒ Fig. ““Connect the Coolant Hose to the Connector Coupling”“ , page 189 .

– Fill with coolant. Refer to ⇒ “1.3.2 Coolant, Draining and Filling, Vehicle with High-Voltage System, Engine Coolant Circuit”, page 143 .

– Install the driveshaft. Refer to ⇒ Rear Final Drive; Rep. Gr. 39 ; Driveshaft; Driveshaft, Removing and Installing .

– Install the lower longitudinal member. Refer to ⇒ Body Exterior; Rep. Gr. 50 ; Lock Carrier; Overview - Lock Carrier .

– Install the wheel housing liners. Refer to ⇒ Body Exterior; Rep. Gr. 66 ; Wheel Housing Liner; Overview - Front Wheel Housing Liner .

– Mount the front wheels. Refer to ⇒ Suspension, Wheels, Steering; Rep. Gr. 44 ; Wheels, Tires .

– Bleed the fuel system. Refer to ⇒ Servicing – 6-Cylinder TDI Common Rail Engine; Rep. Gr. 23 ; Injection System; Fuel System, Filling and Bleeding .

– Check the ATF level. Refer to ⇒ 8-Speed Automatic Transmission; Rep. Gr. 37 ; ATF; ATF Level, Checking .

– Install the underbody trim panel. Refer to ⇒ Body Exterior; Rep. Gr. 66 ; Underbody Trim Panel; Overview - Underbody Trim Panels .

– Install the noise insulations. Refer to ⇒ Body Exterior; Rep. Gr. 66 ; Noise Insulation; Overview - Noise Insulation .

Protected by copyright. Copying for private or commercial purposes, in part or in whole, is not permitted unless authorised by AUDI AG. AUDI AG does not guarantee or accept any liability with respect to the correctness of information in this document. Copyright by AUDI AG.

cardiagn.com

2 Subframe Mount

⇒ “2.1 Overview - Subframe Mount”, page 61

⇒ “2.2 Engine, Supporting in Installation Position”, page 65

⇒ “2.3 Engine Mount, Removing and Installing”, page 66

⇒ “2.4 Subframe Mount Sensor, Removing and Installing”, page 71

⇒ “2.5 Transmission Mount, Removing and Installing”, page 72

2.1 Overview - Subframe Mount

Protected by copyright. Copying for private or commercial purposes, in part or in whole, is not permitted unless authorised by AUDI AG. AUDI AG does not guarantee or accept any liability with respect to the correctness of information in this document. Copyright by AUDI AG.

Engine Mount

1 - Subframe

2 - Subframe Mount Sensor

- ❑ Only for vehicle with high-voltage system

- ♦ Subframe Mount Sensor 1 - G748- left
- ♦ Subframe Mount Sensor 2 - G749- right
  - ❑ Removing and installing. Refer to ⇒ “2.4 Subframe Mount Sensor, Removing and Installing”, page 71 .
  - ❑ Installation position. Refer to ⇒ Fig. ““Subframe Mount Sensor - Installation Position”“ , page 62 .

3 - Bolt

- ❑ 10 Nm

4 - Bolt

- ❑ 55 Nm

5 - Bolt

- ❑ 20 Nm

6 - Bolt

- ❑ 10 Nm

7 - Support Bearing

- ❑ Removing and installing. Refer to ⇒ “2.3 Engine Mount, Removing and Installing”, page 66 .
- ❑ Installation position. Refer to ⇒ Fig. ““Left Support Bearing - Installation Position”“ , page 62 .

8 - Engine Support

- ❑ Removing and installing. Refer to ⇒ “1.7 Engine Support, Removing and Installing”, page 94 .

9 - Bolt

- ❑ 55 Nm

cardiagn.com

10 - Bolt

- ❑ 10 Nm

11 - Heat Shield

12 - Engine Mount

- ❑ Vehicle without high-voltage system with

- ♦ Left Electrohydraulic Engine Mount Solenoid Valve - N144-
- ♦ Right Electrohydraulic Engine Mount Solenoid Valve - N145-

- ❑ Vehicle with high-voltage system with

- ♦ Subframe Mount Actuator 1 - N513- right
- ♦ Subframe Mount Actuator 2 - N514- left

- ❑ Removing and installing. Refer to ⇒ “2.3 Engine Mount, Removing and Installing”, page 66 .

13 - Bolt

- ❑ 90 Nm + 90°
- ❑ Replace after removing

14 - Bolt

- ❑ 30 Nm

Left Support Bearing - Installation Position

- The raised section -2- of the engine support must engage into the opening -1- on the support bearing.

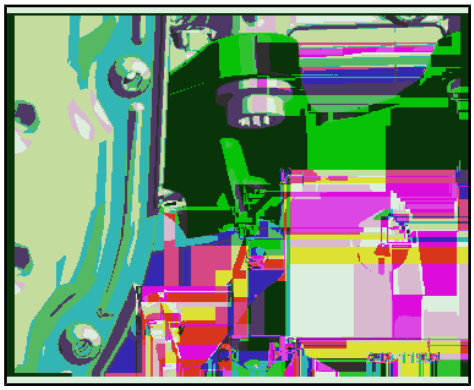

Subframe Mount Sensor - Installation Position

- The sensor -2- must engage in the hole -arrow- on the engine mount -1-.

Automatic Transmission Transmission Mount, Vehicle without High-Voltage System

Protected by copyright. Copying for private or commercial purposes, in part or in whole, is not permitted unless authorised by AUDI AG. AUDI AG does not guarantee or accept any liability with respect to the correctness of information in this document. Copyright by AUDI AG.

cardiagn.com

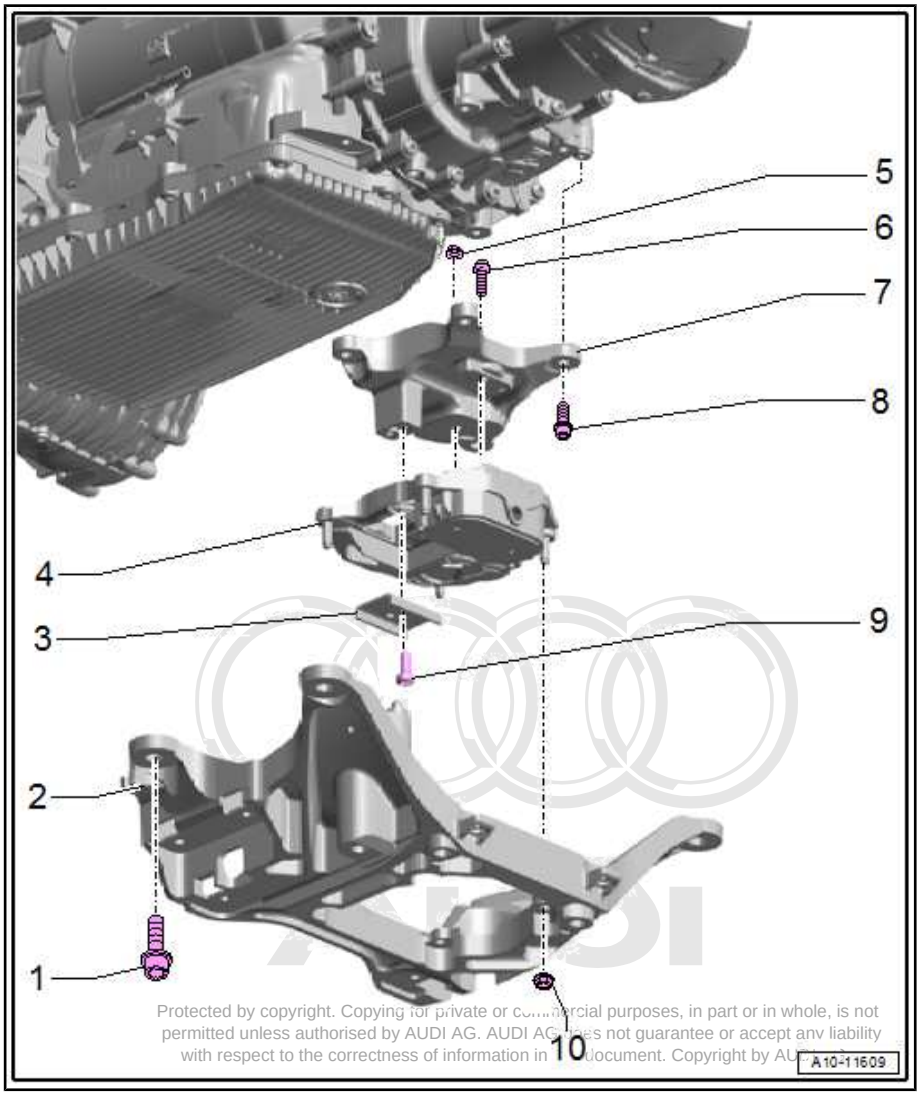

Protected by copyright. Copying for private or commercial purposes, in part or in whole, is not permitted unless authorised by AUDI AG. AUDI AG does not guarantee or accept any liability with respect to the correctness of information in this document. Copyright by AUDI AG.

1 - Bolt

- ❑ Tightening specification. Refer to ⇒ 8-Speed Automatic Transmission; Rep. Gr. 37 ; Subframe Mount; Overview - Subframe Mount .

2 - Tunnel Crossmember

- ❑ Removing and installing. Refer to ⇒ 8-Speed Automatic Transmission; Rep. Gr. 37 ; Subframe Mount; Overview - Subframe Mount .

3 - Stop

- ❑ For the rear transmission mount

4 - Rear Transmission Mount

- ❑ Removing and installing. Refer to ⇒ "2.5 Transmission Mount, Removing and Installing", page 72 .

5 - Nut

- ❑ Only remove when the transmission mount must be separated from the transmission support
- ❑ Tightening specification. Refer to ⇒ 8-Speed Automatic Transmission; Rep. Gr. 37 ; Subframe Mount; Overview - Subframe Mount .

6 - Bolt

- ❑ Only remove when the transmission mount must be separated from the transmission support
- ❑ Tightening specification. Refer to ⇒ 8-Speed Automatic Transmission; Rep. Gr. 37 ; Subframe Mount; Overview - Subframe Mount .

7 - Transmission Support

- ❑ Removing and installing. Refer to ⇒ "2.5 Transmission Mount, Removing and Installing", page 72 .

8 - Bolt

- ❑ Tightening specification. Refer to ⇒ 8-Speed Automatic Transmission; Rep. Gr. 37 ; Subframe Mount; Overview - Subframe Mount .

9 - Bolt

- ❑ Only remove when the transmission mount must be separated from the transmission support
- ❑ Tightening specification. Refer to ⇒ 8-Speed Automatic Transmission; Rep. Gr. 37 ; Subframe Mount; Overview - Subframe Mount .

10 - Nut

- ❑ Tightening specification. Refer to ⇒ 8-Speed Automatic Transmission; Rep. Gr. 37 ; Subframe Mount; Overview - Subframe Mount .

Automatic Transmission, Transmission Mount, Vehicle with High-Voltage System

cardiagn.com

1 - Mount

- ❑ For the side transmission mount

2 - Side Transmission Mount

- ❑ with

- ◆ Transmission Mount Valve 1 - N262- right
- ◆ Transmission Mount Valve 2 - N263- left

- ❑ Removing and installing. Refer to ⇒ "2.5 Transmission Mount, Removing and Installing", page 72 .

3 - Bolt

- ❑ Tightening specification. Refer to ⇒ 8-Speed Automatic Transmission; Rep. Gr. 37 ; Subframe Mount; Overview - Subframe Mount .

4 - Left Transmission Support

- ❑ Removing and installing. Refer to ⇒ "2.5 Transmission Mount, Removing and Installing", page 72 .

5 - Bolt

- ❑ Tightening specification. Refer to ⇒ 8-Speed Automatic Transmission; Rep. Gr. 37 ; Subframe Mount; Overview - Subframe Mount .

6 - Bolt

- ❑ Tightening specification. Refer to ⇒ 8-Speed Automatic Transmission; Rep. Gr. 37 ; Subframe Mount; Overview - Subframe Mount .

7 - Tunnel Crossmember

- ❑ Removing and installing. Refer to ⇒ 8-Speed Automatic Transmission; Rep. Gr. 37 ; Subframe Mount; Overview - Subframe Mount .

8 - Bolt

- ❑ Tightening specification. Refer to ⇒ 8-Speed Automatic Transmission; Rep. Gr. 37 ; Subframe Mount; Overview - Subframe Mount .

9 - Nut

- ❑ Only remove when the transmission mount must be separated from the transmission support
- ❑ Tightening specification. Refer to ⇒ 8-Speed Automatic Transmission; Rep. Gr. 37 ; Subframe Mount; Overview - Subframe Mount .

10 - Transmission Support

- ❑ Removing and installing. Refer to ⇒ "2.5 Transmission Mount, Removing and Installing", page 72 .

11 - Rear Transmission Mount

- ❑ Removing and installing. Refer to ⇒ "2.5 Transmission Mount, Removing and Installing", page 72 .

12 - Stop

- ❑ For the rear transmission mount

Protected by copyright. Copying for private or commercial purposes, in part or in whole, is not permitted unless authorised by AUDI AG. AUDI AG does not guarantee or accept any liability with respect to the correctness of information in this document. Copyright by AUDI AG.

cardiagn.com

13 - Bolt

- ❑ Only remove when the transmission mount must be separated from the transmission support
- ❑ Tightening specification. Refer to ⇒ 8-Speed Automatic Transmission; Rep. Gr. 37 ; Subframe Mount; Overview - Subframe Mount .

14 - Nut

- ❑ Tightening specification. Refer to ⇒ 8-Speed Automatic Transmission; Rep. Gr. 37 ; Subframe Mount; Overview - Subframe Mount .

15 - Bolt

- ❑ Tightening specification. Refer to ⇒ 8-Speed Automatic Transmission; Rep. Gr. 37 ; Subframe Mount; Overview - Subframe Mount .

16 - Heat Shield

17 - Washer

18 - Bolt

- ❑ Tightening specification. Refer to ⇒ 8-Speed Automatic Transmission; Rep. Gr. 37 ; Subframe Mount; Overview - Subframe Mount .

19 - Bolt

- ❑ Tightening specification. Refer to ⇒ 8-Speed Automatic Transmission; Rep. Gr. 37 ; Subframe Mount; Overview - Subframe Mount .

2.2 Engine, Supporting in Installation Position

Special tools and workshop equipment required

- ♦ Engine Support Bridge - 10-222A-
- ♦ Engine Support Bridge - Adapters - 10-222A/34-
- ♦ Engine Support - Basic Set - T40091-
- ♦ Engine Support Bridge - Engine Bracket - 10-222A/1-

Tools, Preparing

– If this is unsuccessful, make a 11 mm diameter hole in both -10-222A/1- as shown.

- Dimension -a- = 30 mm

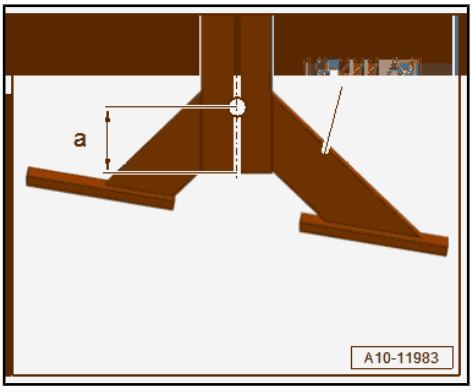

Procedure

– Remove the air filter housing. Refer to ⇒ “3.2 Air Filter Housing, Removing and Installing”, page 229 .

– Remove the left and right headlamp cover. Refer to ⇒ Body Exterior; Rep. Gr. 63 ; Front Bumper .

– Remove the crankcase ventilation hose -2- by pressing the release buttons on both sides.

– Remove the bolts -arrows- and remove the intake tube -1-.

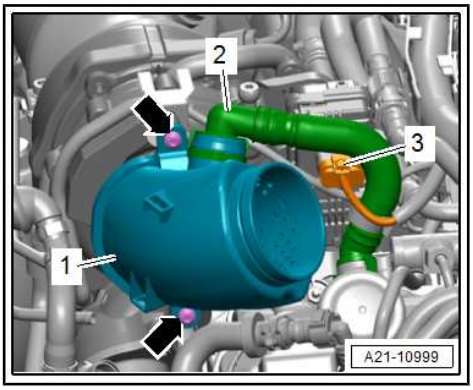

Protected by copyright. Copying for private or commercial purposes, in part or in whole, is not permitted unless authorised by AUDI AG. AUDI AG does not guarantee or accept any liability with respect to the correctness of information in this document. Copyright by AUDI AG.
cardiagn.com

– Position the -10-222A- on the right and left longitudinal member.
– Tighten the -10-222A/34- on the -10-222A/1- with the nut -2- at the same time the adapter must engage in the longitudinal member -1- as shown.
– Attach the -10-222A/11- to the left and right engine lifting eyes.
– Slightly pretension the engine with the spindle, do not lift.

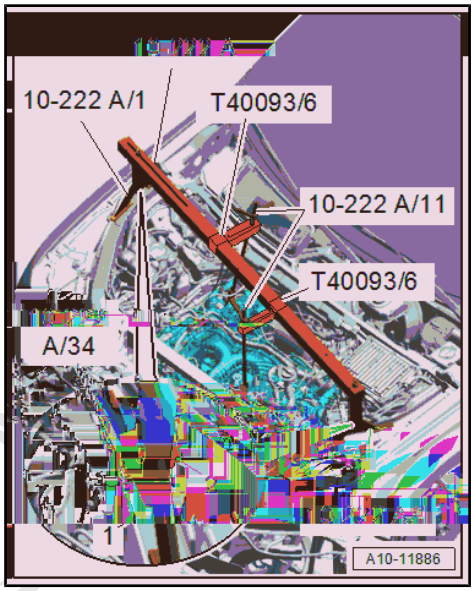

Assembling

Assemble in the reverse order of removal. Note the following:

– Install the headlamp covers. Refer to ⇒ Body Exterior; Rep. Gr. 63 ; Front Bumper .
– Install the air filter housing. Refer to ⇒ “3.2 Air Filter Housing, Removing and Installing”, page 229 .

Tightening Specifications

◆ Refer to ⇒ “1.1 Overview - Turbocharger”, page 206

2.3 Engine Mount, Removing and Installing

⇒ “2.3.1 Engine Mount, Removing and Installing, Left Engine Mount, Vehicles without High-Voltage System”, page 66

⇒ “2.3.2 Engine Mount, Removing and Installing, Left Engine Mount, Vehicles with High-Voltage System”, page 68

⇒ “2.3.3 Right Engine Mount, Removing and Installing”, page 69

⇒ “2.3.4 Engine Mount, Removing and Installing, Left Support Bearing”, page 70

⇒ “2.3.5 Engine Mount, Removing and Installing, Right Support Bearing”, page 70

Protected by copyright. Copying for private or commercial purposes, in part or in whole, is not permitted unless authorised by AUDI AG. AUDI AG does not guarantee or accept any liability with respect to the correctness of information in this document. Copyright by AUDI AG.

2.3.1 Engine Mount, Removing and Installing, Left Engine Mount, Vehicles without High-Voltage System

Removing

– Support the engine in the installation position. Refer to ⇒ “2.2 Engine, Supporting in Installation Position”, page 65 .
– Remove the front noise insulation. Refer to ⇒ Body Exterior; Rep. Gr. 66 ; Noise Insulation; Noise Insulation, Removing and Installing .
– Remove the left front section of the wheel housing liner. Refer to ⇒ Body Exterior; Rep. Gr. 66 ; Wheel Housing Liner; Front Wheel Housing Liner, Removing and Installing .
– Remove the ribbed belt from the A/C compressor belt pulley. Refer to ⇒ “1.3 Ribbed Belt, Removing and Installing”, page 92 .
– Remove the lower left longitudinal member. Refer to ⇒ Body Exterior; Rep. Gr. 50 ; Lock Carrier; Overview - Lock Carrier .
– Remove the A/C compressor from the bracket and tie it up toward the front. Refer to ⇒ Heating, Ventilation and Air Conditioning; Rep. Gr. 87 ; A/C Compressor; A/C Compressor, Removing and Installing on Bracket .

cardiagn.com

– Remove and disconnect the connector -3- for the electrohydraulic engine mount solenoid valve from the bracket.

– Remove the connector -2- from the bracket, disconnect it and free up the wire.

– Remove the left support bearing. Refer to ⇒ “2.3.4 Engine Mount, Removing and Installing, Left Support Bearing”, page 70 .

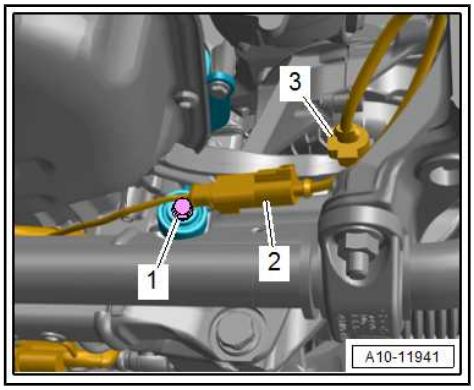

– Remove the bolts -arrows- for the engine mount -1-.

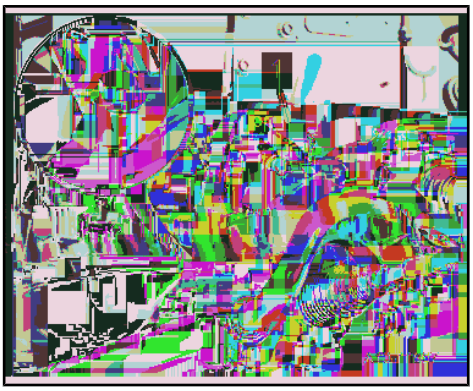

– Lift the engine using the -10-222A/11- -1- on the correct side to dimension -a-.

• Dimension -a- = approximately 20 mm.

– Remove the engine mount.

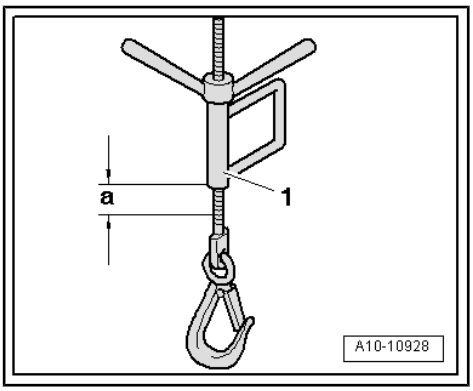

Installing

Install in reverse order of removal and note the following:

• Replace the bolts that were tightened with an additional turn after removing them.

– Install the ribbed belt. Refer to ⇒ “1.3 Ribbed Belt, Removing and Installing”, page 92 .

Tightening Specifications

♦ Refer to ⇒ “2.1 Overview - Subframe Mount”, page 61

♦ Refer to ⇒ Heating, Ventilation and Air Conditioning; Rep. Gr. 87 ; A/C Compressor; Overview - A/C Compressor Power Unit .

♦ Refer to ⇒ Body Exterior; Rep. Gr. 50 ; Lock Carrier; Overview - Lock Carrier .

♦ Refer to ⇒ Body Exterior; Rep. Gr. 66 ; Wheel Housing Liner; Overview - Front Wheel Housing Liner .

♦ Refer to ⇒ Body Exterior; Rep. Gr. 66 ; Noise Insulation; Overview - Noise Insulation .

Protected by copyright. Copying for private or commercial purposes, in part or in whole, is not permitted unless authorised by AUDI AG. AUDI AG does not guarantee or accept any liability with respect to the correctness of information in this document. Copyright by AUDI AG.

cardiagn.com

2.3.2 Engine Mount, Removing and Installing, Left Engine Mount, Vehicles with High-Voltage System

Removing

DANGER

Extremely dangerous due to high-voltage.

Electrocution can cause death or very serious personal injury.

– **Have the high-voltage system de-energized by a qualified person.**

– De-energize the high-voltage system. Refer to ⇒ “7 High-Voltage System, De-Energizing”, page 364 .

– Support the engine in the installation position. Refer to ⇒ “2.2 Engine, Supporting in Installation Position”, page 65 .

– Remove the noise insulation. Refer to ⇒ Body Exterior; Rep. Gr. 66 ; Noise Insulation; Noise Insulation, Removing and Installing .

– Remove the left front section of the wheel housing liner. Refer to ⇒ Body Exterior; Rep. Gr. 66 ; Wheel Housing Liner; Front Wheel Housing Liner, Removing and Installing .

– Remove the lower left longitudinal member. Refer to ⇒ Body Exterior; Rep. Gr. 50 ; Lock Carrier; Overview - Lock Carrier .

– Remove the Electrical A/C Compressor - V470- from the bracket and tie it up toward the front. Refer to ⇒ Heating, Ventilation and Air Conditioning; Rep. Gr. 87 ; A/C Compressor; A/C Compressor, Removing and Installing from Bracket .

Protected by copyright. Copying for private or commercial purposes, in part or in whole, is not permitted unless authorised by AUDI AG. AUDI AG does not guarantee or accept any liability with respect to the correctness of information in th

– Remove the connector -3- for the subframe mount actuator from the bracket and disconnect.

– Remove the connector -2- from the bracket, disconnect it and free up the wire.

– Remove the left support bearing. Refer to ⇒ “2.3.4 Engine Mount, Removing and Installing, Left Support Bearing”, page 70 .

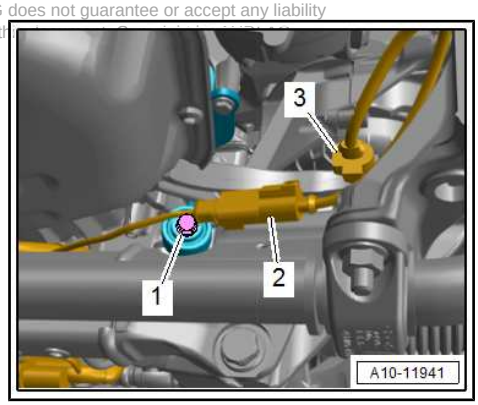

– Remove the bolts -arrows- for the engine mount -1-.

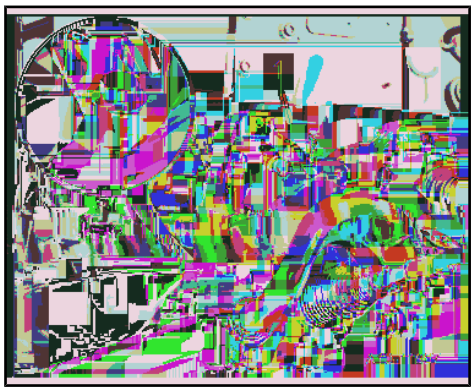

cardiagn.com

– Lift the engine using the -10-222A/11- -1- on the correct side to dimension -a-.

• Dimension -a- = approximately 20 mm.

– Remove the engine mount.

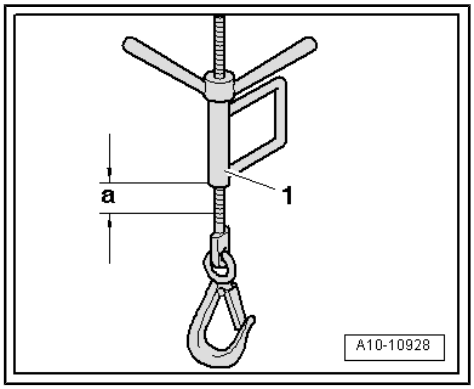

Installing

Install in reverse order of removal and note the following:

• Replace the bolts that were tightened with an additional turn after removing them.

WARNING

Extremely dangerous due to high-voltage.

Severe bodily injury or death by electrocution is possible.

– Have a qualified person put the high-voltage system back into service.

– Re-energize the high-voltage system. Refer to ⇒ “8 High-Voltage System, Re-Energizing”, page 366 .

Tightening Specifications

♦ Refer to ⇒ “2.1 Overview - Subframe Mount”, page 61

♦ Refer to ⇒ Heating, Ventilation and Air Conditioning; Rep. Gr. 87 ; A/C Compressor; Overview - A/C Compressor Power Unit .

♦ Refer to ⇒ Body Exterior; Rep. Gr. 50 ; Lock Carrier; Overview - Lock Carrier .

♦ Refer to ⇒ Body Exterior; Rep. Gr. 66 ; Wheel Housing Liner; Overview - Front Wheel Housing Liner .

♦ Refer to ⇒ Body Exterior; Rep. Gr. 66 ; Noise Insulation; Overview - Noise Insulation .

Protected by copyright. Copying for private or commercial purposes, in part or in whole, is not permitted unless authorized by AUDI AG. AUDI AG does not guarantee or accept any liability with respect to the correctness of information in this document. Copyright by AUDI AG.

2.3.3 Right Engine Mount, Removing and Installing

Removing

– Lower the subframe. Refer to ⇒ Suspension, Wheels, Steering; Rep. Gr. 40 ; Subframe; Subframe, Lowering .

– Remove the bolts -arrows- and right engine mount -1-.

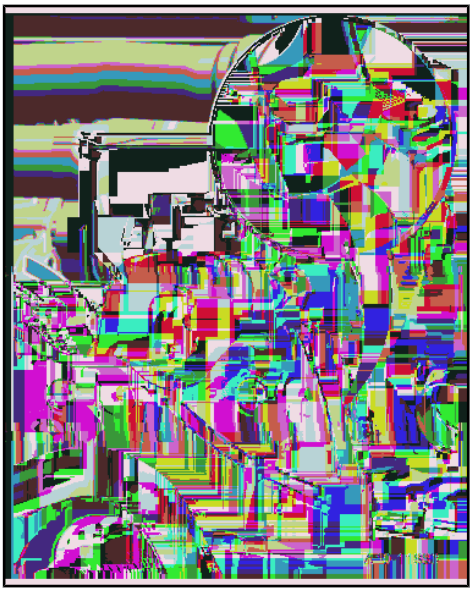

Installing

Install in reverse order of removal and note the following:

• Replace the bolts that were tightened with an additional turn after removing them.

– Install the subframe. Refer to ⇒ Suspension, Wheels, Steering; Rep. Gr. 40 ; Subframe; Subframe, Lowering .

Tightening Specifications

♦ Refer to ⇒ “2.1 Overview - Subframe Mount”, page 61

cardiagn.com

2.3.4 Engine Mount, Removing and Installing, Left Support Bearing

Removing

– Remove the front noise insulation. Refer to ⇒ Body Exterior; Rep. Gr. 66 ; Noise Insulation; Noise Insulation, Removing and Installing .

– Remove the connector -1- from the bracket.

– Remove the bolts -arrows- and remove the left support bearing -2-.

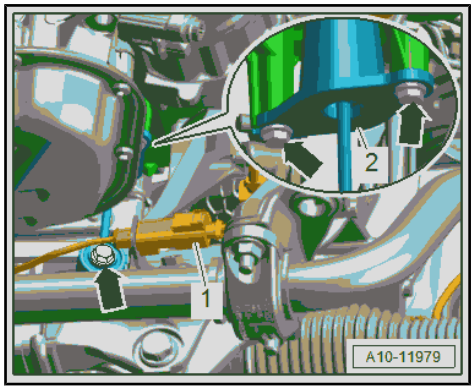

Installing

Install in reverse order of removal and note the following:

- Replace the bolts that were tightened with an additional turn after removing them.
- Installation position. Refer to ⇒ Fig. ""Left Support Bearing - Installation Position"" , page 62 .

Tightening Specifications

- Refer to ⇒ "2.1 Overview - Subframe Mount", page 61
- Refer to ⇒ Body Exterior; Rep. Gr. 66 ; Noise Insulation; Overview - Noise Insulation .

2.3.5 Engine Mount, Removing and Installing, Right Support Bearing

Special tools and workshop equipment required

- Scissor Lift Table - Audi Set - Mounting Pin - VAS6131/10-2- from Scissor Lift Table - Audi Set - VAS6131/10-
- Scissor Lift Table - A8 Set - Adapter - VAS6131/11-2- from Scissor Lift Table - A8 Set - VAS6131/11- , not illustrated
- Engine and Gearbox Jack - VAS6931-
- Engine/Gearbox Jack - Gearbox Support - T10337-

Protected by copyright. Copying for private or commercial purposes, in part or in whole, is not permitted unless authorised by AUDI AG. AUDI AG does not guarantee or accept any liability with respect to the correctness of information in this document. Copyright by AUDI AG.

-T10337- , Preparing:

– Remove the rubber protector -1- from the -T10337- .

– If this does not work, drill a 10.2 mm hole -arrow- in the center.

– Cut a M12 thread in the hole.

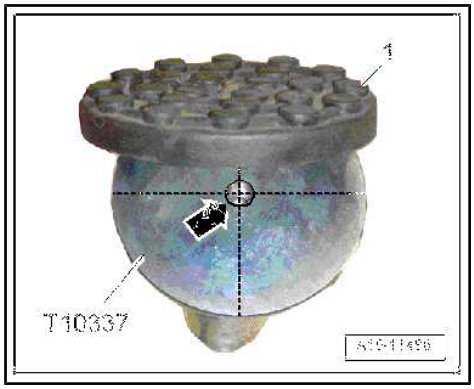

Removing

– Remove the front noise insulation. Refer to ⇒ Body Exterior; Rep. Gr. 66 ; Noise Insulation; Noise Insulation, Removing and Installing .

cardiagn.com

– Remove the connector -2- from the bracket.
– Remove the bolt -1- for the left support bearing.

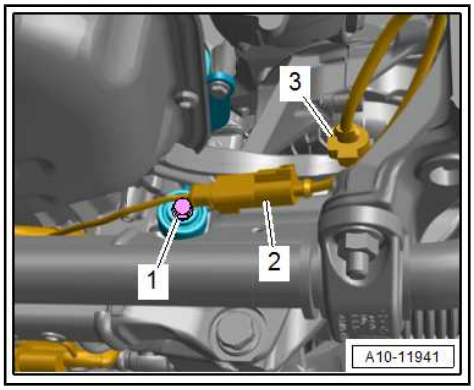

– Remove the bolts -arrows- for the right support bearing -1-.

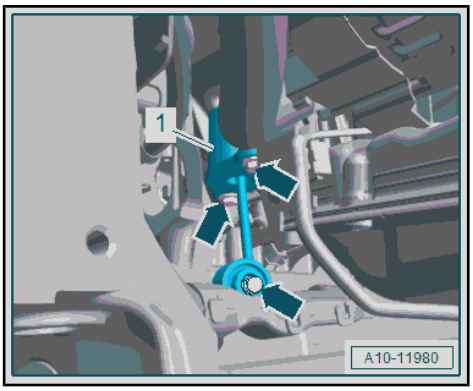

• To remove the right support bearing, the engine must be lifted up slightly on the left side.
– Tighten the -VAS6131/10-2- on the -T10337- .
– Position the -VAS6931- on the engine as shown.
– Lift the engine slightly, until the right support bearing can be removed to the left side.

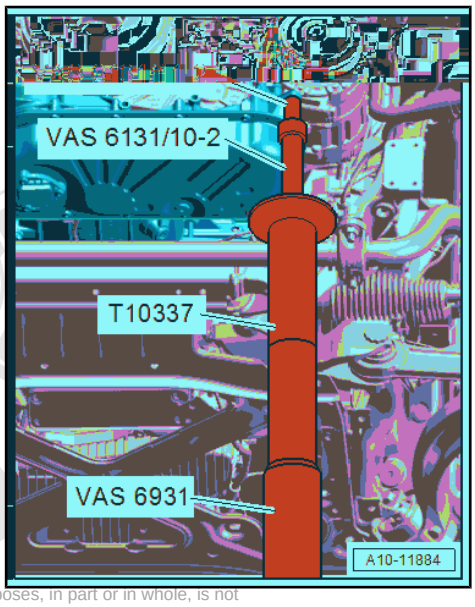

Installing

Install in reverse order of removal and note the following:

• Installation position. Refer to ⇒ Fig. ""Left Support Bearing - Installation Position"" , page 62 .

Tightening Specifications

♦ Refer to ⇒ "2.1 Overview - Subframe Mount", page 61
♦ Refer to ⇒ Body Exterior; Rep. Gr. 66 ; Noise Insulation; Overview - Noise Insulation .

Protected by copyright. Copying for private or commercial purposes, in part or in whole, is not permitted unless authorised by AUDI AG. AUDI AG does not guarantee or accept any liability with respect to the correctness of information in this document. Copyright by AUDI AG.

2.4 Subframe Mount Sensor, Removing and Installing

Removing

– Remove the corresponding engine cover. Refer to ⇒ "3.1 Engine Cover, Removing and Installing", page 77 .
– Right sensor for the subframe mount: Remove the front noise insulation. Refer to ⇒ Body Exterior; Rep. Gr. 66 ; Noise Insulation; Noise Insulation, Removing and Installing .

cardiagn.com

– Disconnect the connector -1-.

– Remove the bolt -2- from above and remove the subframe mount sensor.

Installing

Install in reverse order of removal and note the following:

- Installation position. Refer to ⇒ Fig. ""Subframe Mount Sensor - Installation Position"" , page 62 .

– Install the engine cover. Refer to ⇒ "3.1 Engine Cover, Removing and Installing", page 77 .

Tightening Specifications

◆ Refer to ⇒ "2.1 Overview - Subframe Mount", page 61

◆ Refer to ⇒ Body Exterior; Rep. Gr. 66 ; Noise Insulation; Overview - Noise Insulation .

2.5 Transmission Mount, Removing and Installing

⇒ "2.5.1 Transmission Mount, Removing and Installing, Transmission Support with Rear Transmission Mount for Vehicles without High-Voltage System", page 72

⇒ "2.5.2 Transmission Mount, Removing and Installing, Transmission Support with Rear Transmission Mount for Vehicles with High-Voltage System", page 73

⇒ "2.5.3 Transmission Mount, Removing and Installing, Rear Transmission Mount for Vehicles without High-Voltage System", page 73

⇒ "2.5.4 Transmission Mount, Removing and Installing, Rear Transmission Mount for Vehicles with High-Voltage System", page 74

⇒ "2.5.5 Transmission Mount, Removing and Installing, Left Transmission Mount for Vehicles with High-Voltage System", page 74

⇒ "2.5.6 Transmission Mount, Removing and Installing, Right Transmission Mount for Vehicles with High-Voltage System", page 75

2.5.1 Transmission Mount, Removing and Installing, Transmission Support with Rear Transmission Mount for Vehicles without High-Voltage System

Removing

– Remove the tunnel crossmember. Refer to ⇒ 8-Speed Automatic Transmission; Rep. Gr. 37 ; Subframe Mount; Overview - Subframe Mount .

Protected by copyright. Copying for private or commercial purposes, in part or in whole, is not permitted unless authorised by AUDI AG. AUDI AG does not guarantee or accept any liability with respect to the correctness of information in this document. Copyright by AUDI AG.

cardiagn.com

– Remove the bolts -arrows- and remove the transmission support with the transmission mount -1- from the transmission.

Installing

Install in reverse order of removal.

Tightening Specifications

♦ Refer to ⇒ 8-Speed Automatic Transmission; Rep. Gr. 37 ; Subframe Mount; Overview - Subframe Mount .

2.5.2 Transmission Mount, Removing and Installing, Transmission Support with Rear Transmission Mount for Vehicles with High-Voltage System

Reproduction or processing, in part or in whole, is not permitted unless authorised by AUDI AG. AUDI AG does not guarantee or accept any liability with respect to the correctness of information in this document. Copyright by AUDI AG.

Removing

– Remove the tunnel crossmember. Refer to ⇒ 8-Speed Automatic Transmission; Rep. Gr. 37 ; Subframe Mount; Overview - Subframe Mount .

– Remove the bolts -arrows- and remove the transmission support with the transmission mount -1- from the transmission.

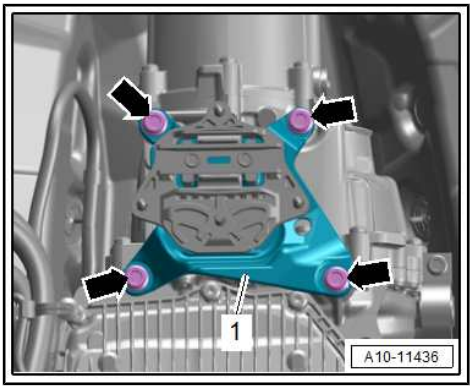

Installing

Install in reverse order of removal.

Tightening Specifications

♦ Refer to ⇒ 8-Speed Automatic Transmission; Rep. Gr. 37 ; Subframe Mount; Overview - Subframe Mount .

2.5.3 Transmission Mount, Removing and Installing, Rear Transmission Mount for Vehicles without High-Voltage System

Removing

– Remove the transmission support with the rear transmission mount. Refer to
⇒ “2.5.1 Transmission Mount, Removing and Installing, Transmission Support with Rear Transmission Mount for Vehicles without High-Voltage System”, page 72 .

cardiagn.com

– Remove the bolts -1- and remove the stop -2- for the transmission mount.
– Remove the nut -5- and the bolt -6- and remove the transmission mount -3- from the transmission support -4-.

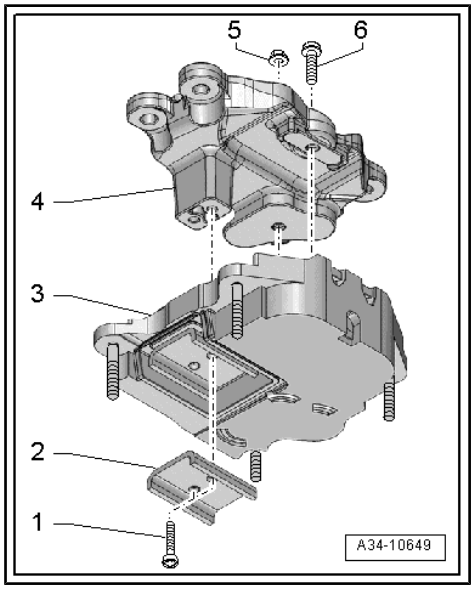

Installing

Install in reverse order of removal and note the following:

– Next tighten the nut -5- and bolt -6- hand-tight.
– Tighten the bolts and nuts in the following sequence: -1, 5 and 6-.
– Install the transmission support with the rear transmission mount. Refer to ⇒ “2.5.1 Transmission Mount, Removing and Installing, Transmission Support with Rear Transmission Mount for Vehicles without High-Voltage System”, page 72 .

Tightening Specifications

♦ Refer to ⇒ 8-Speed Automatic Transmission; Rep. Gr. 37 ; Subframe Mount; Overview - Subframe Mount .

2.5.4 Transmission Mount, Removing and Installing, Rear Transmission Mount for Vehicles with High-Voltage System

Removing

– Remove the transmission support with the rear transmission mount. Refer to ⇒ “2.5.2 Transmission Mount, Removing and Installing, Transmission Support with Rear Transmission Mount for Vehicles with High-Voltage System”, page 73 .
– Remove the bolts -1- and remove the stop -2- for the transmission mount.
– Remove the nut -5- and remove the transmission mount -3- from the transmission support -4-.

Installing

Install in reverse order of removal and note the following:

– Tighten the nut -5- hand-tight.
– Tighten the bolts and nuts in the following sequence: -1 and 5-.
– Install the transmission support with the rear transmission mount. Refer to ⇒ “2.5.2 Transmission Mount, Removing and Installing, Transmission Support with Rear Transmission Mount for Vehicles with High-Voltage System”, page 73 .

Tightening Specifications

♦ Refer to ⇒ 8-Speed Automatic Transmission; Rep. Gr. 37 ; Subframe Mount; Overview - Subframe Mount .

2.5.5 Transmission Mount, Removing and Installing, Left Transmission Mount for Vehicles with High-Voltage System

Protected by copyright. Copying for private or commercial purposes, in part or in whole, is not permitted unless authorized by AUDI AG. AUDI AG does not guarantee or accept any liability with respect to the correctness of information in this document. Copyright by AUDI AG.

Removing

– Remove the rear noise insulation. Refer to ⇒ Body Exterior; Rep. Gr. 66 ; Noise Insulation; Overview - Noise Insulation .

cardiagn.com

– Remove the left subframe shield upper section. Refer to ⇒ Suspension, Wheels, Steering; Rep. Gr. 40 ; Subframe; Subframe Shield, Removing and Installing .

– Remove the bolts -arrows- and remove the left transmission mount heat shield -1-.

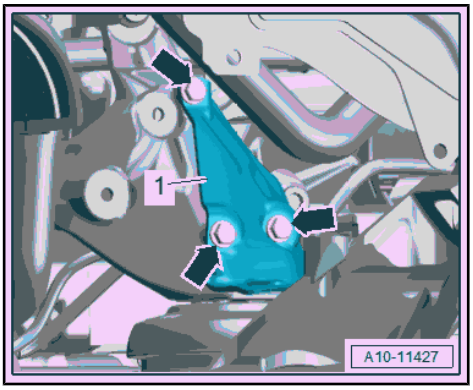

– Remove the bolts -arrows- and remove the left transmission support -1- for the left transmission mount.

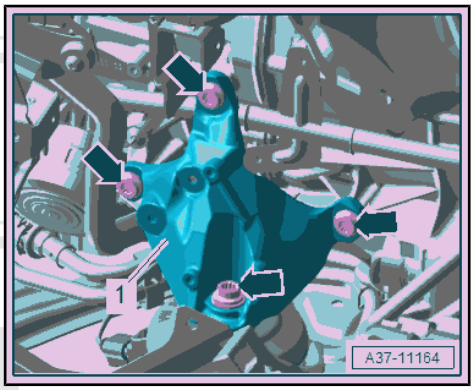

– Disconnect the connector -2-.

– Remove the bolts -arrows-.

– Remove the left transmission mount -3- and pry out of the mount -1-.

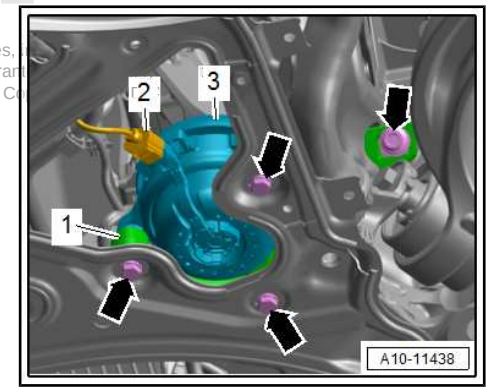

Protected by copyright. Copying for private or commercial purposes, in part or in full, is not permitted unless authorised by AUDI AG. AUDI AG does not guarantee or accept any liability with respect to the correctness of information in this document. Copyright by AUDI AG.

Installing

Install in reverse order of removal and note the following:

- Install the transmission mount without tension.

Tightening Specifications

♦ Refer to ⇒ 8-Speed Automatic Transmission; Rep. Gr. 37 ; Subframe Mount; Overview - Subframe Mount .

♦ Refer to ⇒ Suspension, Wheels, Steering; Rep. Gr. 40 ; Subframe; Overview - Subframe .

2.5.6 Transmission Mount, Removing and Installing, Right Transmission Mount for Vehicles with High-Voltage System

Removing

– Remove the subframe crossbrace. Refer to ⇒ Suspension, Wheels, Steering; Rep. Gr. 40 ; Subframe; Subframe Crossbrace, Removing and Installing .

– Remove the right subframe shield upper section. Refer to ⇒ Suspension, Wheels, Steering; Rep. Gr. 40 ; Subframe; Subframe Shield, Removing and Installing .

cardiagn.com

– Disconnect the connector -2-.
– Free up the coolant hose.
– Remove the bolts -arrows- and remove the right transmission mount -1- with the transmission support.

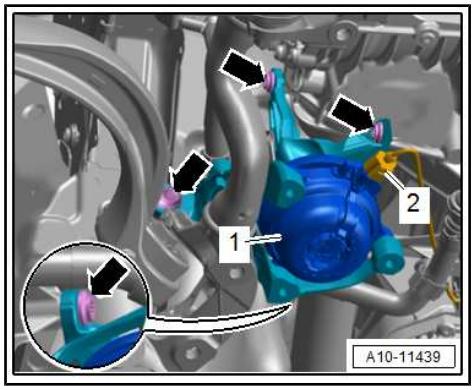

– Remove the bolt -arrow-, remove the transmission support -1- and pry out the mount -3- from the transmission mount -2-.

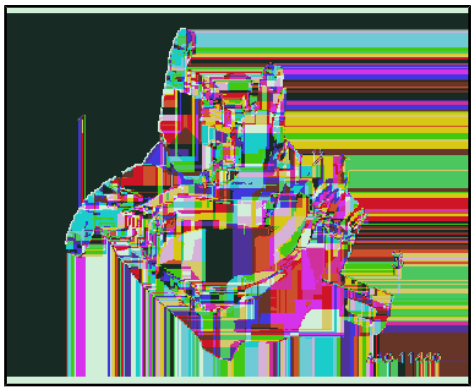

Installing

Install in reverse order of removal and note the following:

- Install the transmission mount without tension.

Tightening Specifications

- Refer to ⇒ 8-Speed Automatic Transmission; Rep. Gr. 37 ; Subframe Mount; Overview - Subframe Mount .
- Refer to ⇒ Suspension, Wheels, Steering; Rep. Gr. 40 ; Subframe; Overview - Subframe .

cardiagn.com

Protected by copyright. Copying for private or commercial purposes, in part or in whole, is not permitted unless authorised by AUDI AG. AUDI AG does not guarantee or accept any liability with respect to the correctness of information in this document. Copyright by AUDI AG.

3 Engine Cover

⇒ “3.1 Engine Cover, Removing and Installing”, page 77

3.1 Engine Cover, Removing and Installing

Special tools and workshop equipment required

- Engine Bung Set - VAS6122-

Removing

– Remove the air filter upper section. Refer to ⇒ “3.2 Air Filter Housing, Removing and Installing”, page 229 .

Left Engine Cover

– Release the retainer and remove the oil filler tube -1- upward from the air filter lower section -2-.

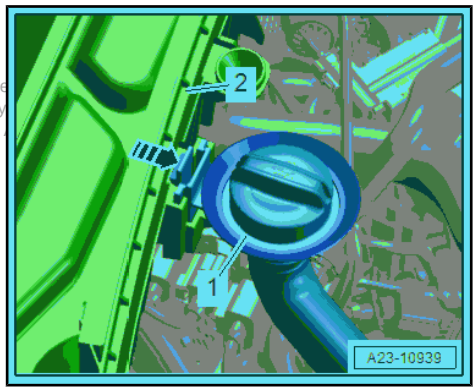

– Remove the cap -2-.

– Release the retainer -1-, turn the oil filler tube -3- counter-clockwise in the direction of -arrow- and then remove it.

– Close the oil filler tube with the cap.

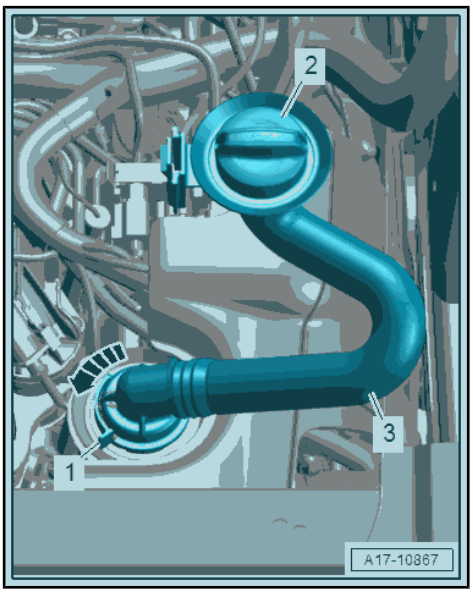

Vehicle with High-Voltage System

– Disconnect the connector -2-.

– Release the catches -arrows- and remove the coolant expansion tank -1- and move to the side.

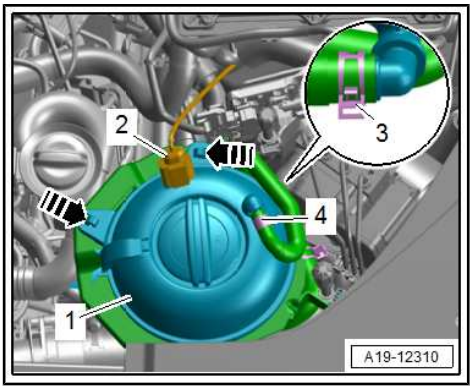

The reproduction, distribution and utilization of this document, in private or commercial purposes, in part or in whole, is not permitted unless authorised by AUDI AG. AUDI AG does not guarantee or accept any liability with respect to the correctness of information in this document. Copyright by AUDI AG.

cardiagn.com

– Free up the refrigerant line -2- and latch release cable -3-.
– Remove the bolts -arrows- and move the bracket -1- for the coolant expansion tank to the side.

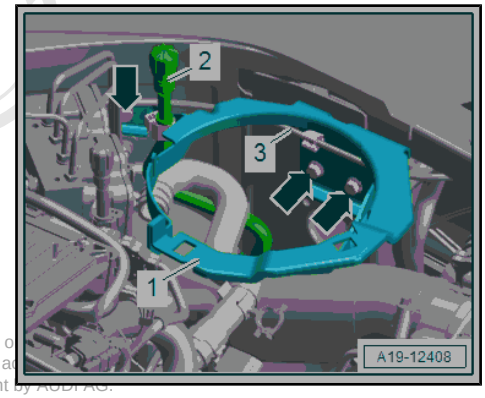

Protected by copyright. Copying for private or commercial purposes, in part o
permitted unless authorised by AUDI AG. AUDI AG does not guarantee or a
with respect to the correctness of information in this document. Copyright by AUDI AG.

Continuation for All Vehicles

– Loosen the hose clamp -arrow- and remove the air duct hose.

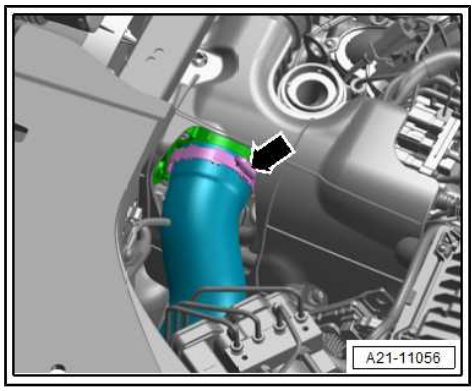

– Pull the left side of the engine cover -1- off of the ball pins in direction of -arrows- and remove it.

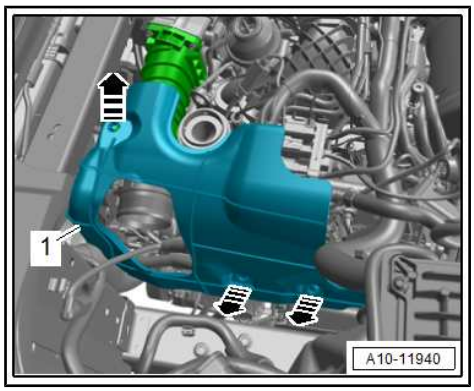

Right Engine Cover

– Disconnect the connector -2-.
– Loosen the hose clamp -1- and open the clips -arrows-.
– Remove the Mass Airflow Sensor - G70- -3- from the air filter lower section and remove with the air duct pipe.

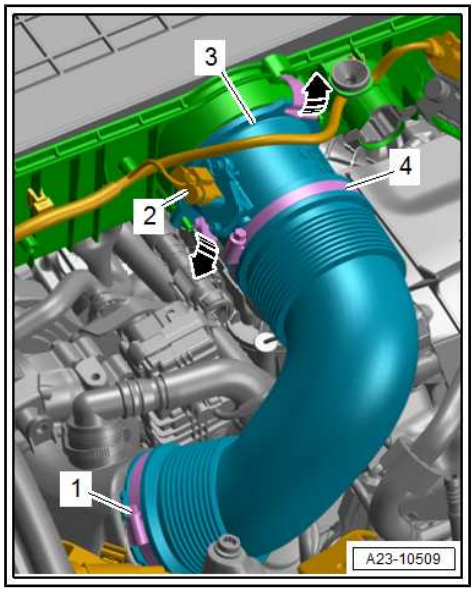

cardiagn.com

– Disconnect the fuel hoses -1, 2 and 3-. Refer to ⇒ Fuel Supply System; Rep. Gr. 20 ; Connector Couplings; Connector Couplings, Disconnecting .

– Always seal the open lines and connections with clean plugs from the -VAS6122- .

– Free up the fuel hoses and move them to the right side.

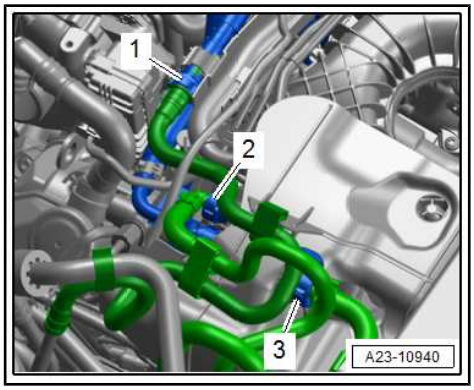

– Pull the right side of the engine cover -1- off of the ball pins in the direction of -arrows- and remove it.

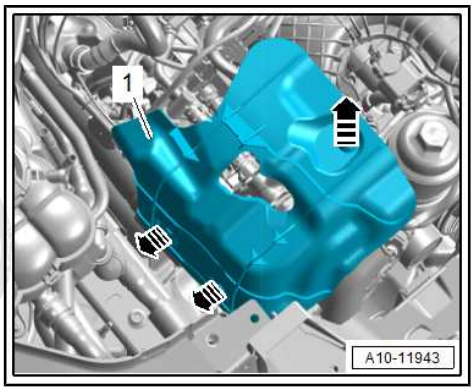

Installing

Install in reverse order of removal and note the following:

• Secure all hose connections with hose clamps that match the ones used in series production. Refer to the Parts Catalog.

– To prevent damage to the engine cover, do not hit it with a fist or a tool.

– Use both hands to press the engine cover onto the retaining pins.

– Connect the fuel hoses. Refer to ⇒ Fuel Supply System; Rep. Gr. 20 ; Connector Couplings; Connector Couplings, Disconnecting .

– Install the air filter upper section. Refer to ⇒ "3.2 Air Filter Housing, Removing and Installing", page 229 .

Protected by copyright. Copying for private or commercial purposes, in part or in whole, is not permitted unless authorised by AUDI AG. AUDI AG does not guarantee or accept any liability with respect to the correctness of information in this document. Copyright by AUDI AG.

Tightening Specifications

♦ Refer to ⇒ Servicing – 6-Cylinder TDI Common Rail Engine; Rep. Gr. 21 ; Charge Air System; Overview - Charge Air Hose Connections .

cardiagn.com

4 Special Tools

Special tools and workshop equipment required

- Engine/Gearbox Jack - Gearbox Support - T10337-

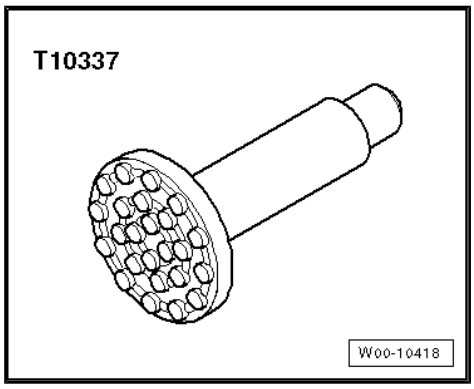

- Engine Support - T10533-

Protected by copyright. Copying for private or commercial purposes, in part or in wh
permitted unless authorised by AUDI AG. AUDI AG does not guarantee or accept any liability
with respect to the correctness of information in this document. Copyright by AUDI AG.

- Engine Support - Basic Set - T40091-

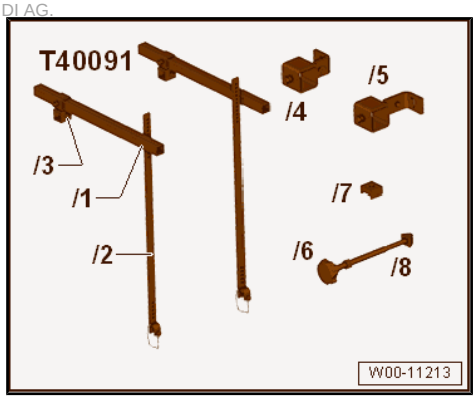

- Clutch Module Transportation Lock - T40170-

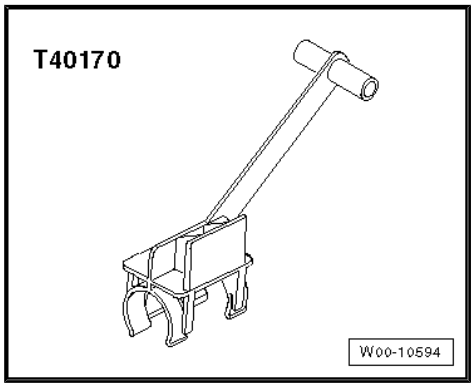

cardiagn.com

- Wrench - 21mm - T40263-

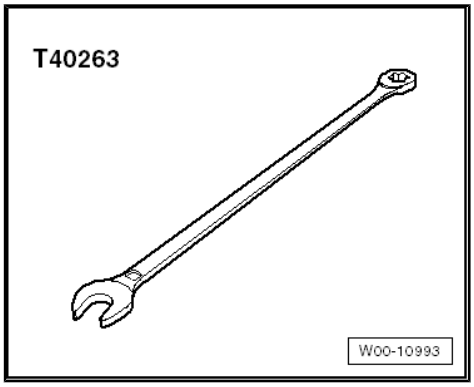

- Adapter - T40314-

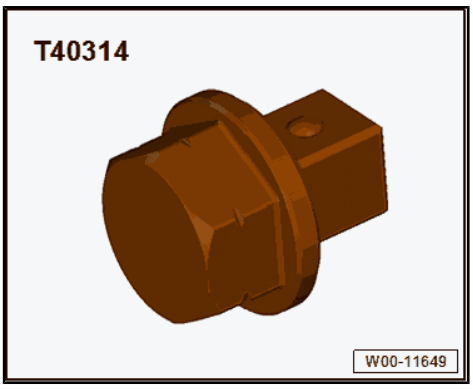

- Torque Wrench 1332 Insert - Ring Wrench - 16mm - VAG1332/14-

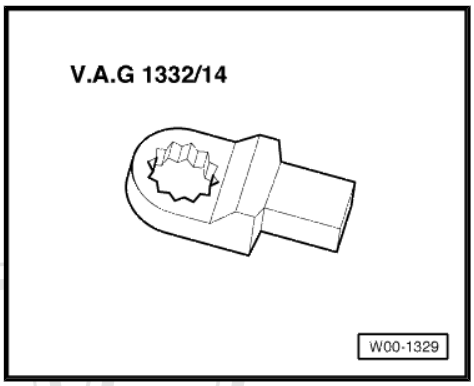

- Engine and Gearbox Bracket - VAS6095A-

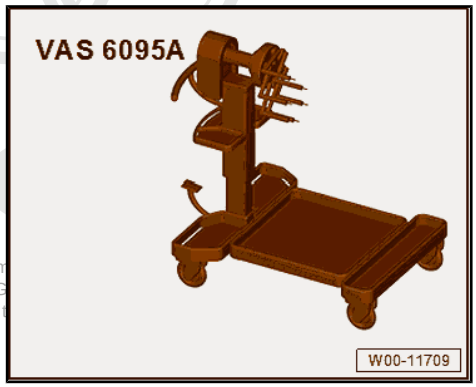

Protected by copyright. Copying for private or comm
permitted unless authorised by AUDI AG. AUDI AG
with respect to the correctness of information in t

cardiagn.com

- Engine/Transmission Holder - Universal Mounting - VAS6095/1- and Engine and Transmission Holder - Bracket (V6 TDI Engine) - VAS6095/1-14-

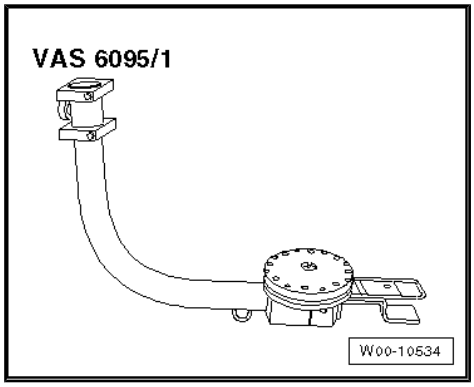

- Shop Crane - VAS6100-

- Lift Arm Extension - VAS6101-

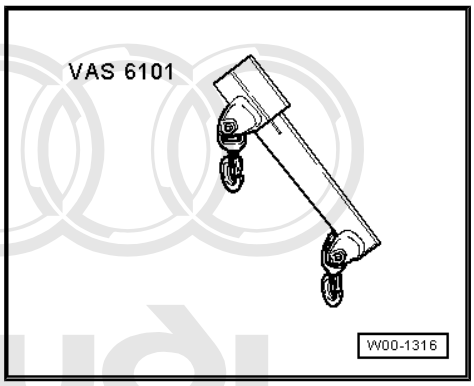

- Engine Bung Set - VAS6122-

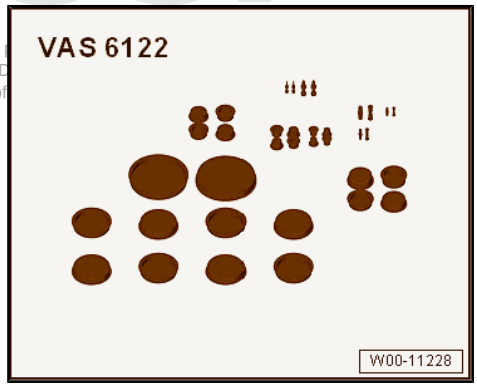

Protected by copyright. Copying for
permitted unless authorised by AUD
with respect to the correctness of

cardiagn.com

- Scissor Lift Table - VAS6131B-

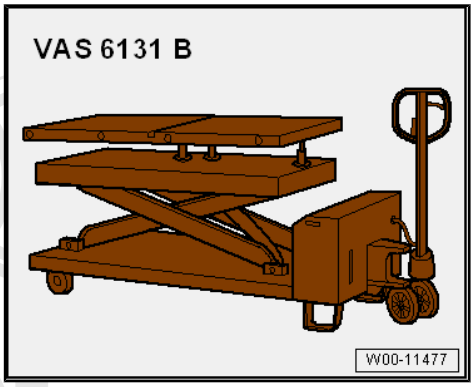

- Scissor Lift Table - Audi Set - VAS6131/10-

Protected by copyright. Copying for private or commercial purpos
permitted unless authorised by AUDI AG. AUDI AG does not gu
with respect to the correctness of information in this documen

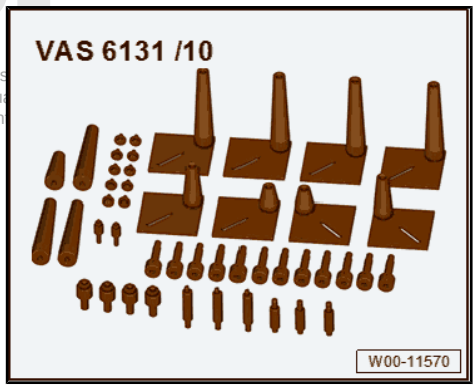

- Scissor Lift Table - A8 Set - Adapter - VAS6131/11-1- from Scissor Lift Table - A8 Set - VAS6131/11- , not illustrated
- Scissor Lift Table - A6 Set - Mounting Pins - VAS6131/12-2- from Scissor Lift Table - A6 Set - VAS6131/12- , not illustrated
- Scissor Lift Table - Q7 Set - VAS6131/13-

- Coolant Collection System - VAS5014- or Shop Crane - Drip Tray - VAS6208-

cardiagn.com

- Hose Clip Pliers - VAS6340-

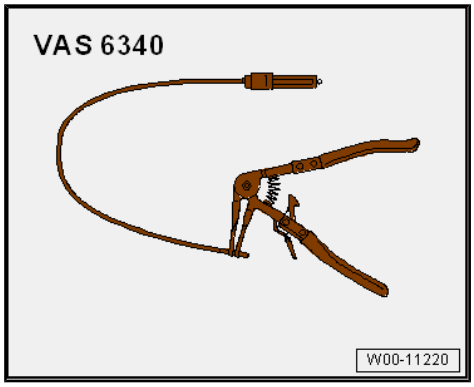

- Hose Clip Pliers - VAS6362-

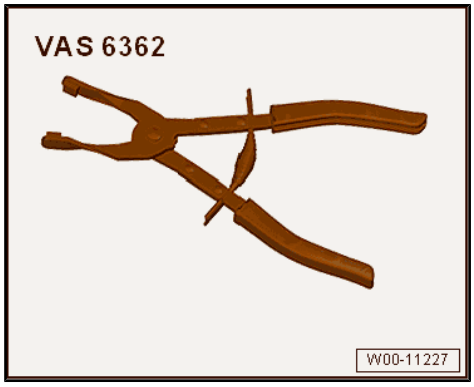

- Engine and Gearbox Jack - VAS6931-

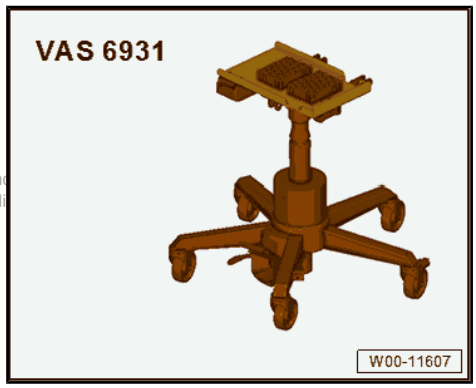

- Engine Support Bridge - 10-222A-

- Adapters - 10-222A/34- , not illustrated

Protected by copyright. Copying for private or commercial purposes, in part or in whole, is n
permitted unless authorised by AUDI AG. AUDI AG does not guarantee or accept any liabili
with respect to the correctness of information in this document. Copyright by AUDI AG.

cardiagn.com

- Pry Lever - 80-200-

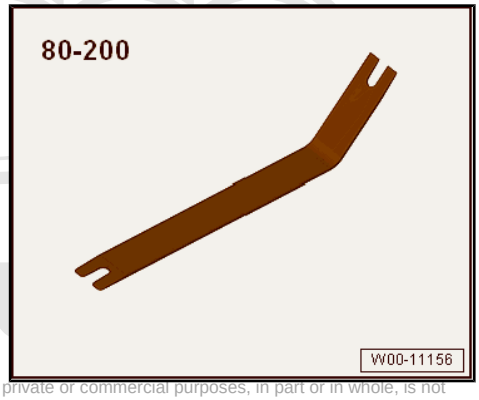

Protected by copyright. Copying for private or commercial purposes, in part or in whole, is not permitted unless authorised by AUDI AG. AUDI AG does not guarantee or accept any liability with respect to the correctness of

- Lifting Tackle - 3033-

- Commercially available Step Ladder
- Not illustrated:
- Engine Support - Threaded Rod - T10533/5-
- Engine Support Bridge - Engine Bracket - 10-222A/1-

cardiagn.com

13 – Crankshaft, Cylinder Block

1 Cylinder Block, Belt Pulley Side

⇒ “1.1 Overview - Cylinder Block, Belt Pulley Side”, page 86

⇒ “1.2 Overview - Belt Pulley Side Sealing Flange”, page 91

⇒ “1.3 Ribbed Belt, Removing and Installing”, page 92

⇒ “1.4 Ribbed Belt Tensioner, Removing and Installing”, page 93

⇒ “1.5 Vibration Damper, Removing and Installing”, page 94

⇒ “1.6 Sub-Assembly Bracket, Removing and Installing”, page 94

⇒ “1.7 Engine Support, Removing and Installing”, page 94

⇒ “1.8 Belt Pulley, Removing and Installing”, page 95

⇒ “1.9 Crankshaft Seal, Replacing, Belt Pulley Side”, page 96

⇒ “1.10 Sealing Flange, Removing and Installing, Belt Pulley Side”, page 96

1.1 Overview - Cylinder Block, Belt Pulley Side

Protected by copyright. Copying for private or commercial purposes, in part or in whole, is not permitted unless authorized by AUDI AG. AUDI AG does not guarantee or accept any liability with respect to the correctness of information in this document. Copyright by AUDI AG.

⇒ “1.1.1 Overview - Cylinder Block, Belt Pulley Side, Vehicles without High-Voltage System”, page 86

⇒ “1.1.2 Overview - Cylinder Block Belt Pulley Side, Vehicles with High-Voltage System”, page 89

1.1.1 Overview - Cylinder Block, Belt Pulley Side, Vehicles without High-Voltage System

cardiagn.com

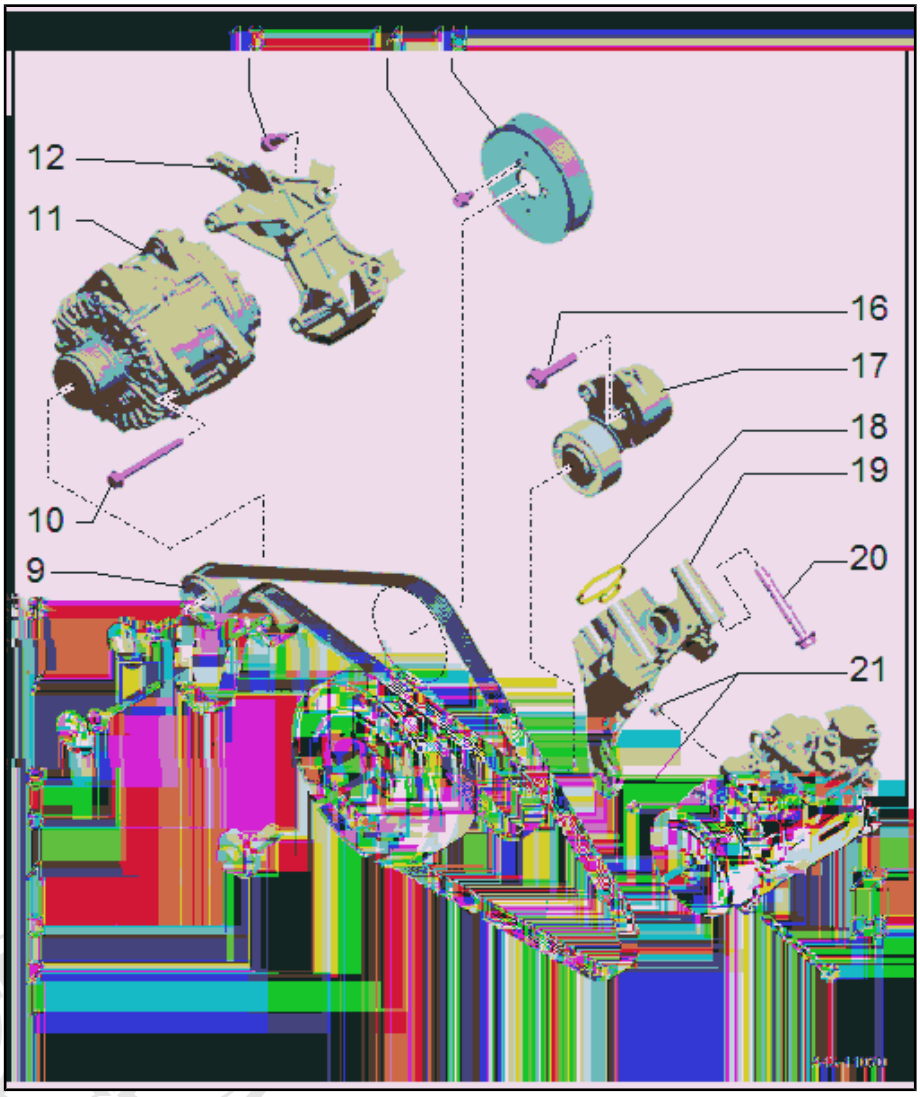

1 - Ribbed Belt

- ❑ Installation instructions. Refer to ⇒ Servicing – 6-Cylinder TDI Common Rail Engine; Rep. Gr. 13 ; Cylinder Block Belt Pulley Side; Overview - Cylinder Block Belt Pulley Side .
- ❑ Removing and installing. Refer to ⇒ Servicing – 6-Cylinder TDI Common Rail Engine; Rep. Gr. 13 ; Cylinder Block Belt Pulley Side; Ribbed Belt, Removing and Installing .

2 - Vibration Damper

- ❑ With the ribbed belt pulley
- ❑ Removing and installing. Refer to ⇒ Servicing – 6-Cylinder TDI Common Rail Engine; Rep. Gr. 13 ; Cylinder Block Belt Pulley Side; Vibration Damper, Removing and Installing .

3 - Bolt

- ❑ Tightening specifications. Refer to ⇒ Servicing – 6-Cylinder TDI Common Rail Engine; Rep. Gr. 13 ; Cylinder Block Belt Pulley Side; Overview - Cylinder Block Belt Pulley Side .

4 - Idler Roller

- ❑ For the ribbed belt

5 - Bolt

- ❑ Tightening specifications. Refer to ⇒ Servicing – 6-Cylinder TDI Common Rail Engine; Rep. Gr. 13 ; Cylinder Block Belt Pulley Side; Overview - Cylinder Block Belt Pulley Side .

6 - Cover

- ❑ For the idler roller

Protected by copyright. Copying for private or commercial purposes, in part or in whole, is not permitted unless authorised by AUDI AG. AUDI AG does not guarantee or accept any liability with respect to the correctness of information in this document. Copyright by AUDI AG.

7 - Cover

- ❑ For the idler roller

8 - Bolt

- ❑ Tightening specifications. Refer to ⇒ Servicing – 6-Cylinder TDI Common Rail Engine; Rep. Gr. 13 ; Cylinder Block Belt Pulley Side; Overview - Cylinder Block Belt Pulley Side .

9 - Idler Roller

- ❑ For the ribbed belt

10 - Bolt

- ❑ Tightening specifications. Refer to ⇒ Electrical Equipment; Rep. Gr. 27 ; Generator; Overview - Generator .

11 - Generator

- ❑ Removing and installing. Refer to ⇒ Electrical Equipment; Rep. Gr. 27 ; Generator; Generator, Removing and Installing .

cardiagn.com

12 - Bracket

- ❑ For the generator
- ❑ Removing and installing. Refer to ⇒ Servicing – 6-Cylinder TDI Common Rail Engine; Rep. Gr. 13 ; Cylinder Block Belt Pulley Side; Sub-Assembly Bracket, Removing and Installing .

13 - Bolt

- ❑ Tightening specifications. Refer to ⇒ Servicing – 6-Cylinder TDI Common Rail Engine; Rep. Gr. 13 ; Cylinder Block Belt Pulley Side; Overview - Cylinder Block Belt Pulley Side .

14 - Bolt

- ❑ Tightening specifications. Refer to ⇒ Servicing – 6-Cylinder TDI Common Rail Engine; Rep. Gr. 19 ; Coolant Pump/Coolant Regulation; Overview - Coolant Pump .

15 - Belt Pulley

- ❑ For the coolant pump

16 - Bolt

- ❑ Tightening specifications. Refer to ⇒ Servicing – 6-Cylinder TDI Common Rail Engine; Rep. Gr. 13 ; Cylinder Block Belt Pulley Side; Overview - Cylinder Block Belt Pulley Side .

17 - Tensioner

- ❑ For the ribbed belt
- ❑ Removing and installing. Refer to ⇒ Servicing – 6-Cylinder TDI Common Rail Engine; Rep. Gr. 13 ; Cylinder Block Belt Pulley Side; Ribbed Belt Tensioner, Removing and Installing .

18 - Seal

- ❑ Installation instructions. Refer to ⇒ Servicing – 6-Cylinder TDI Common Rail Engine; Rep. Gr. 13 ; Cylinder Block Belt Pulley Side; Overview - Cylinder Block Belt Pulley Side .

Protected by copyright. Copying for private or commercial purposes, in part or in whole, is not permitted unless authorised by AUDI AG. AUDI AG does not guarantee or accept any liability with respect to the correctness of information in this document. Copyright by AUDI AG.

19 - Bracket

- ❑ For the A/C compressor
- ❑ Removing and installing. Refer to ⇒ Servicing – 6-Cylinder TDI Common Rail Engine; Rep. Gr. 13 ; Cylinder Block Belt Pulley Side; Sub-Assembly Bracket, Removing and Installing .

20 - Bolt

- ❑ Tightening specifications. Refer to ⇒ Servicing – 6-Cylinder TDI Common Rail Engine; Rep. Gr. 13 ; Cylinder Block Belt Pulley Side; Overview - Cylinder Block Belt Pulley Side .

21 - Alignment Sleeves

22 - A/C Compressor

- ❑ Removing and installing. Refer to ⇒ Heating, Ventilation and Air Conditioning; Rep. Gr. 87 ; A/C Compressor; A/C Compressor on Bracket, Removing and Installing .

23 - Bolt

- ❑ Tightening specification. Refer to ⇒ Heating, Ventilation and Air Conditioning; Rep. Gr. 87 ; A/C Compressor; Overview - A/C Compressor Power Unit .

cardiagn.com

1.1.2 Overview - Cylinder Block Belt Pulley Side, Vehicles with High-Voltage System

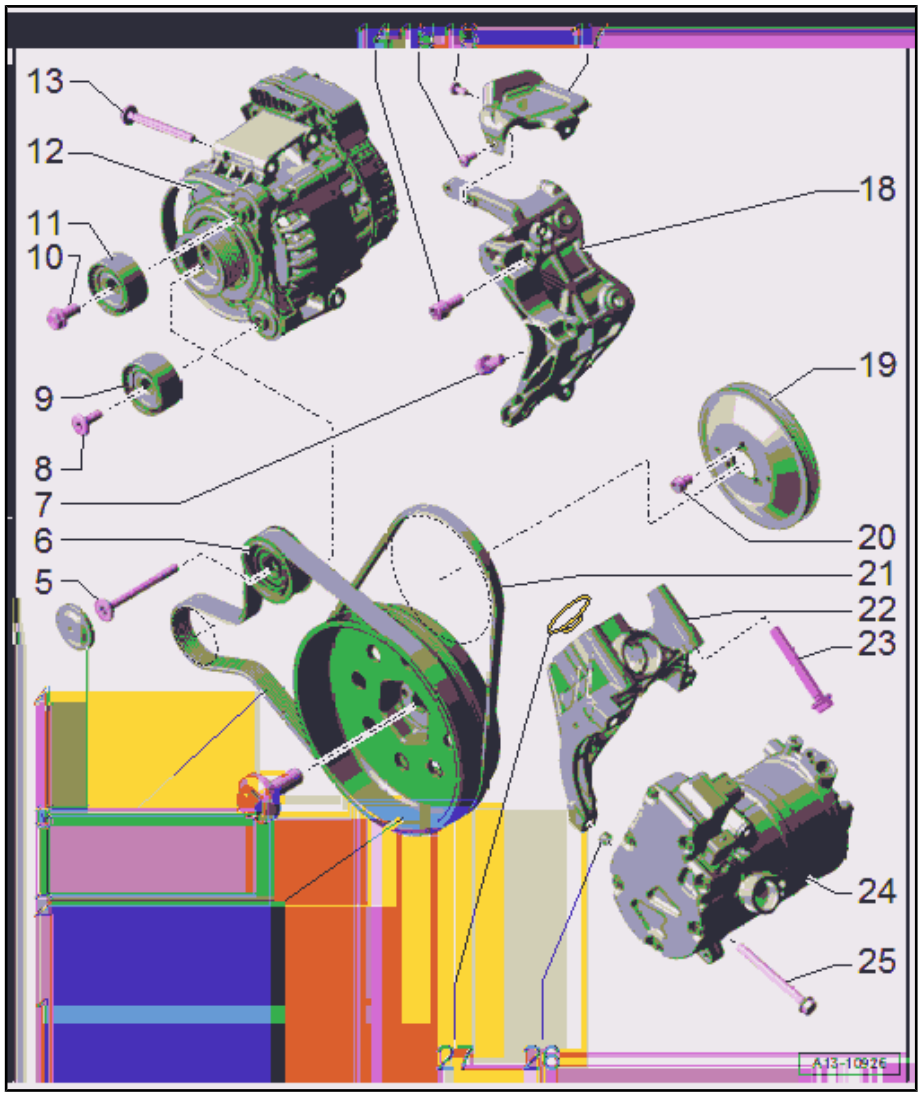

1 - Belt Pulley

- ❑ For the crankshaft
- ❑ Removing and installing. Refer to ⇒ “1.8 Belt Pulley, Removing and Installing”, page 95 .

2 - Bolt

- ❑ Tightening specifications. Refer to ⇒ Servicing – 6-Cylinder TDI Common Rail Engine; Rep. Gr. 13 ; Cylinder Block Belt Pulley Side; Overview - Cylinder Block Belt Pulley Side .

3 - Starter Generator Ribbed Belt

- ❑ Check for wear
- ❑ Do not kink
- ❑ Ribbed belt routing. Refer to ⇒ Fig. ““Starter Generator Ribbed Belt Routing”“ , page 91 .
- ❑ Before removing, mark the running direction using chalk or a felt-tip pen.
- ❑ Removing and installing. Refer to ⇒ “1.3.2 Ribbed Belt for Starter Generator, Removing and Installing, Vehicles with High-Voltage System”, page 92 .
- ❑ When installing, make sure it is seated correctly on the ribbed belt pulleys

4 - Cover

- ❑ For the belt pulley

5 - Bolt

- ❑ 30 Nm

6 - Belt Pulley

- ❑ For the starter generator

7 - Bolt

- ❑ Tightening specifications. Refer to ⇒ Servicing – 6-Cylinder TDI Common Rail Engine; Rep. Gr. 13 ; Cylinder Block Belt Pulley Side; Overview - Cylinder Block Belt Pulley Side .

8 - Bolt

- ❑ Tightening specifications. Refer to ⇒ Electrical Equipment; Rep. Gr. 27 ; Generator; Overview - Generator .

9 - Idler Roller

- ❑ For the ribbed belt

cardiagn.com

10 - Bolt

- ❑ Tightening specifications. Refer to ⇒ Electrical Equipment; Rep. Gr. 27 ; Generator; Overview - Generator .

11 - Idler Roller

- ❑ For the ribbed belt

12 - Starter Generator - C29-

- ❑ Removing and installing. Refer to ⇒ Electrical Equipment; Rep. Gr. 27 ; Generator; Generator, Removing and Installing .

13 - Bolt

- ❑ Tightening specifications. Refer to ⇒ Electrical Equipment; Rep. Gr. 27 ; Generator; Overview - Generator .

14 - Bolt

- ❑ Tightening specifications. Refer to ⇒ Servicing – 6-Cylinder TDI Common Rail Engine; Rep. Gr. 13 ; Cylinder Block Belt Pulley Side; Overview - Cylinder Block Belt Pulley Side .

15 - Bolt

- ❑ 9 Nm

16 - Bolt

- ❑ 9 Nm

17 - Heat Shield

18 - Bracket

- ❑ For the starter generator
- ❑ Removing and installing. Refer to ⇒ “1.6.2 Generator Bracket, Removing and Installing”, page 94 .

19 - Belt Pulley

- ❑ For the coolant pump

20 - Bolt

- ❑ Tightening specifications. Refer to ⇒ Servicing – 6-Cylinder TDI Common Rail Engine; Rep. Gr. 19 ; Coolant Pump/Coolant Regulation; Overview - Coolant Pump .

21 - Coolant Pump Ribbed Belt

- ❑ Check for wear
- ❑ Do not kink
- ❑ Removing and installing. Refer to ⇒ “1.3.3 Ribbed Belt for Coolant Pump, Removing and Installing, Vehicles with High-Voltage System”, page 93 .
- ❑ When installing, make sure it is seated correctly on the ribbed belt pulleys

22 - Bracket

- ❑ For the A/C compressor
- ❑ Removing and installing. Refer to ⇒ Servicing – 6-Cylinder TDI Common Rail Engine; Rep. Gr. 13 ; Cylinder Block Belt Pulley Side; Sub-Assembly Bracket, Removing and Installing .

23 - Bolt

- ❑ Tightening specifications. Refer to ⇒ Servicing – 6-Cylinder TDI Common Rail Engine; Rep. Gr. 13 ; Cylinder Block Belt Pulley Side; Overview - Cylinder Block Belt Pulley Side .

24 - Electrical A/C Compressor - V470-

- ❑ Removing and installing. Refer to ⇒ Heating, Ventilation and Air Conditioning; Rep. Gr. 87 ; A/C Compressor; A/C Compressor on Bracket, Removing and Installing .

25 - Bolt

- ❑ Tightening specifications. Refer to ⇒ Heating, Ventilation and Air Conditioning; Rep. Gr. 87 ; A/C Compressor; Overview - A/C Compressor Power Unit .

Protected by copyright. Copying for private or commercial purposes, in part or in whole, is not permitted unless authorised by AUDI AG. AUDI AG does not guarantee or accept any liability with respect to the correctness of information in this document. Copyright by AUDI AG.

cardiagn.com

26 - Alignment Sleeve

27 - Seal

- ❑ Installation instructions. Refer to ⇒ Servicing – 6-Cylinder TDI Common Rail Engine; Rep. Gr. 13 ; Cylinder Block Belt Pulley Side; Overview - Cylinder Block Belt Pulley Side .

Starter Generator Ribbed Belt Routing

1 - Starter Generator

2 - Upper Tensioner Idler Roller

3 - Idler Roller

4 - Crankshaft Belt Pulley

5 - Lower Tensioner Idler Roller

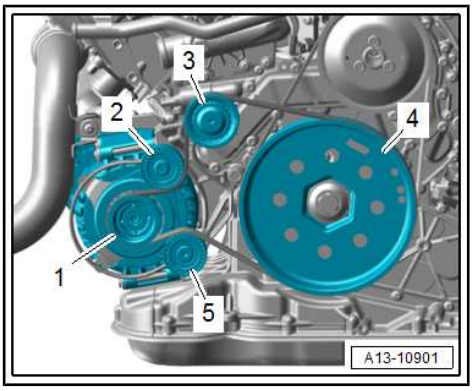

1.2 Overview - Belt Pulley Side Sealing Flange

1 - Seal

- ❑ For the belt pulley side crankshaft
- ❑ Replacing. Refer to ⇒ Servicing – 6-Cylinder TDI Common Rail Engine; Rep. Gr. 13 ; Belt Pulley Side Cylinder Block; Belt Pulley Side Crankshaft Seal, Replacing .

2 - Sealing Flange, Belt Pulley Side

- ❑ Removing and installing. Refer to ⇒ "1.10 Sealing Flange, Removing and Installing, Belt Pulley Side", page 96 .

3 - Bracket

- ❑ For the Intake Flap Motor - V157-

4 - Bolt

- ❑ Tightening specifications. Refer to ⇒ Servicing – 6-Cylinder TDI Common Rail Engine; Rep. Gr. 13 ; Cylinder Block Belt Pulley Side; Overview - Sealing Flange Belt Pulley Side .

5 - O-rings

- ❑ Installation instructions. Refer to ⇒ Servicing – 6-Cylinder TDI Common Rail Engine; Rep. Gr. 13 ; Cylinder Block Belt Pulley Side; Overview - Cylinder Block Belt Pulley Side .

cardiagn.com

6 - Oil Temperature Sensor 2 - G664-

- ❑ Removing and installing. Refer to ⇒ Servicing – 6-Cylinder TDI Common Rail Engine; Rep. Gr. 17 ; Oil Filter/Oil Pressure Switch .

7 - Bolt

- ❑ Tightening specifications. Refer to ⇒ Servicing – 6-Cylinder TDI Common Rail Engine; Rep. Gr. 13 ; Cylinder Block Belt Pulley Side; Overview - Sealing Flange Belt Pulley Side .

8 - Seal

- ❑ Installation instructions. Refer to ⇒ Servicing – 6-Cylinder TDI Common Rail Engine; Rep. Gr. 13 ; Cylinder Block Belt Pulley Side; Overview - Cylinder Block Belt Pulley Side .

9 - Bolt

- ❑ Tightening specifications. Refer to ⇒ Servicing – 6-Cylinder TDI Common Rail Engine; Rep. Gr. 19 ; Coolant Pump/Coolant Regulation; Overview - Coolant Pump .

10 - Coolant Thermostat Housing

- ❑ Overview. Refer to ⇒ “2.3 Overview - Coolant Thermostat”, page 155 .

11 - O-ring

- ❑ Installation instructions. Refer to ⇒ Servicing – 6-Cylinder TDI Common Rail Engine; Rep. Gr. 13 ; Cylinder Block Belt Pulley Side; Overview - Cylinder Block Belt Pulley Side .

12 - Seal

- ❑ Installation instructions. Refer to ⇒ Servicing – 6-Cylinder TDI Common Rail Engine; Rep. Gr. 13 ; Cylinder Block Belt Pulley Side; Overview - Cylinder Block Belt Pulley Side .

13 - Alignment Pin

- ❑ Quantity: 2

14 - Bolt

- ❑ Tightening specifications. Refer to ⇒ Servicing – 6-Cylinder TDI Common Rail Engine; Rep. Gr. 13 ; Cylinder Block Belt Pulley Side; Overview - Sealing Flange Belt Pulley Side .

1.3 Ribbed Belt, Removing and Installing

⇒ “1.3.1 Ribbed Belt, Removing and Installing, Vehicle without High-Voltage System”, page 92

⇒ “1.3.2 Ribbed Belt for Starter Generator, Removing and Installing, Vehicles with High-Voltage System”, page 92

⇒ “1.3.3 Ribbed Belt for Coolant Pump, Removing and Installing, Vehicles with High-Voltage System”, page 93

1.3.1 Ribbed Belt, Removing and Installing, Vehicle without High-Voltage System

All procedures are described. Refer to ⇒ Servicing – 6-Cylinder TDI Common Rail Engine; Rep. Gr. 13 ; Cylinder Block Belt Pulley Side; Ribbed Belt, Removing and Installing .

1.3.2 Ribbed Belt for Starter Generator, Removing and Installing, Vehicles with High-Voltage System

Special tools and workshop equipment required

- ♦ Locking Pin - T10060A-

Removing

– Remove the front noise insulation. Refer to ⇒ Body Exterior; Rep. Gr. 66 ; Noise Insulation; Noise Insulation, Removing and Installing .

Protected by copyright. Copying for private or commercial purposes, in part or in whole, is not permitted unless authorised by AUDI AG. AUDI AG does not guarantee or accept any liability with respect to the correctness of information in this document. Copyright by AUDI AG.

cardiagn.com

NOTICE

Risk of destroying a used ribbed belt by reversing the running direction.

- **Mark the running direction before removal.**
- **Pay attention to the running direction when reinstalling.**

- To release the tension of the ribbed belt tensioner, pivot with the wrench counter-clockwise in the direction of -arrow- and lock with the -T10060A- .
- Remove the ribbed belt.

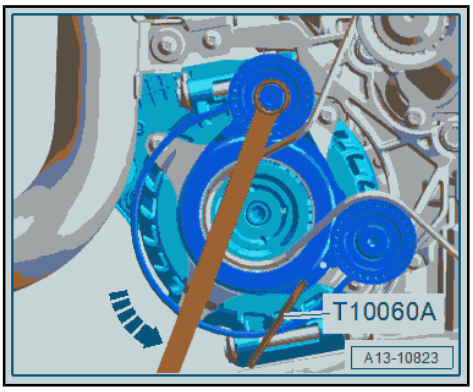

Installing

Install in reverse order of removal and note the following:

- Install the ribbed belt. Refer to ⇒ Fig. ""Starter Generator Ribbed Belt Routing"" , page 91 .
- Check whether the ribbed belt is routed correctly.
- Start the engine and check whether the ribbed belt runs correctly.

Tightening Specifications

- Refer to ⇒ Body Exterior; Rep. Gr. 66 ; Noise Insulation; Overview - Noise Insulation .

1.3.3 Ribbed Belt for Coolant Pump, Removing and Installing, Vehicles with High-Voltage System

Special tools and workshop equipment required

- Repair Set, Ribbed Belt with Assembly Tool . Refer to the Parts Catalog.
- Repair Set, Ribbed Belt with Assembly Tool

Procedure

Protected by copyright. Copying for private or commercial purposes, in part or in whole, is not permitted unless authorized by AUDI AG. Otherwise this copy is only for private use within the permissible scope of the applicable national copyright law. © AUDI AG.

The Repair Set, Ribbed Belt with Assembly Tool contains the assembly tool and an illustrated instruction manual.

- Remove the ribbed belt for the starter generator. Refer to ⇒ "1.3.2 Ribbed Belt for Starter Generator, Removing and Installing, Vehicles with High-Voltage System", page 92 .
- Cut through to remove the ribbed belt.
- Refer to the illustrated instructions for additional procedures (Included in the Repair Set, Ribbed Belt with Assembly Tool).

Install in reverse order of removal.

1.4 Ribbed Belt Tensioner, Removing and Installing

Only Vehicles without High-Voltage System

All procedures are described. Refer to ⇒ Servicing – 6-Cylinder TDI Common Rail Engine; Rep. Gr. 13 ; Cylinder Block Belt Pulley Side; Ribbed Belt Tensioner, Removing and Installing .

cardiagn.com

1.5 Vibration Damper, Removing and Installing

Only Vehicles without High-Voltage System

All procedures are described. Refer to ⇒ Servicing – 6-Cylinder TDI Common Rail Engine; Rep. Gr. 13 ; Cylinder Block Belt Pulley Side; Vibration Damper, Removing and Installing .

1.6 Sub-Assembly Bracket, Removing and Installing

⇒ “1.6.1 A/C Compressor Bracket, Removing and Installing”, page 94

⇒ “1.6.2 Generator Bracket, Removing and Installing”, page 94

1.6.1 A/C Compressor Bracket, Removing and Installing

All procedures are described. Refer to ⇒ Servicing – 6-Cylinder TDI Common Rail Engine; Rep. Gr. 13 ; Cylinder Block Belt Pulley Side; Sub-Assembly Bracket, Removing and Installing .

1.6.2 Generator Bracket, Removing and Installing

Removing

– Vehicle with high-voltage system: Remove the ribbed belt for the starter generator. Refer to ⇒ “1.3.2 Ribbed Belt for Starter Generator, Removing and Installing, Vehicles with High-Voltage System”, page 92 .

All additional procedures are described. Refer to ⇒ Servicing – 6-Cylinder TDI Common Rail Engine; Rep. Gr. 13 ; Cylinder Block Belt Pulley Side; Sub-Assembly Bracket, Removing and Installing .

Installing

Additional procedures:

– Vehicle with high-voltage system: Install the ribbed belt for the starter generator. Refer to ⇒ “1.3.2 Ribbed Belt for Starter Generator, Removing and Installing, Vehicles with High-Voltage System”, page 92 .

Protected by copyright. Copying for private or commercial purposes, in part or in whole, is not permitted unless authorised by AUDI AG. AUDI AG does not guarantee or accept any liability with respect to the correctness of information in this document. Copyright by AUDI AG.

1.7 Engine Support, Removing and Installing

Removing

– Remove the engine mount. Refer to ⇒ “2.3 Engine Mount, Removing and Installing”, page 66 .

cardiagn.com

Left Engine Support

– Remove the bolts -arrows- and the engine support -1-.

– Vehicle with high-voltage system: Free up the high-voltage cable.

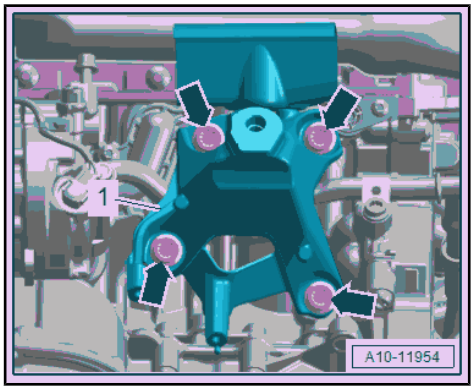

Right Engine Support

– Remove the ground cable bolt -2-.

– Remove the bolts -arrows- and the engine support -1-.

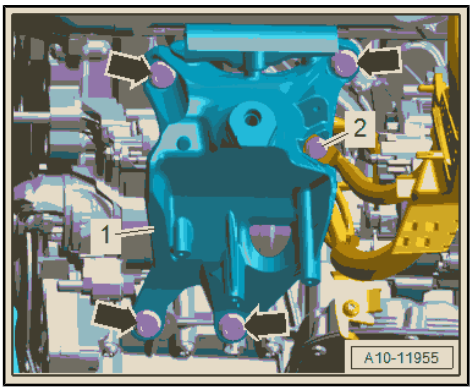

Installing

Install in reverse order of removal and note the following:

– Install the engine mount. Refer to ⇒ “2.3 Engine Mount, Removing and Installing”, page 66 .

– Connections and wire routing. Refer to ⇒ Wiring diagrams, Troubleshooting & Component locations.

Tightening Specifications

♦ Refer to ⇒ “2.1 Overview - Subframe Mount”, page 61

1.8 Belt Pulley, Removing and Installing

Only for Vehicles with High-Voltage System

Protected by copyright. Copying for private or commercial purposes, in part or in whole, is not permitted unless authorised by AUDI AG. AUDI AG does not guarantee or accept any liability with respect to the correctness of information in this document. Copyright by AUDI AG.

Special tools and workshop equipment required

♦ Counterhold Tool - T40298-

♦ Counterhold Tool - T40298/1-

♦ Counterhold Tool - Spacer Sleeve - T40298/2-

♦ Adapter - T40341-

Tools, Preparing

– Remove the bolts -arrows- and the mount -1- from the -T40298/1- .

– Fasten the -T40341- to the counterhold tool.

Removing

– Remove the ribbed belt for the coolant pump. Refer to ⇒ “1.3.3 Ribbed Belt for Coolant Pump, Removing and Installing, Vehicles with High-Voltage System”, page 93 .

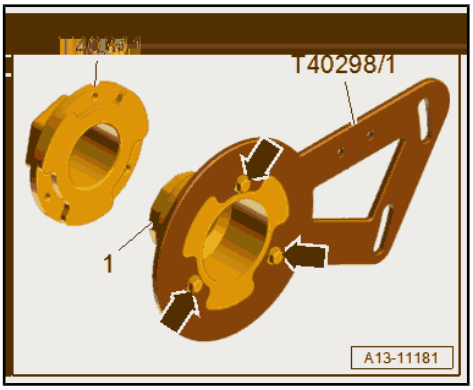

cardiagn.com

– Position the -T40298/1- with the -T40341- on the belt pulley and secure with the bolts -arrows- (23 Nm) by placing the -T40298/2- underneath.

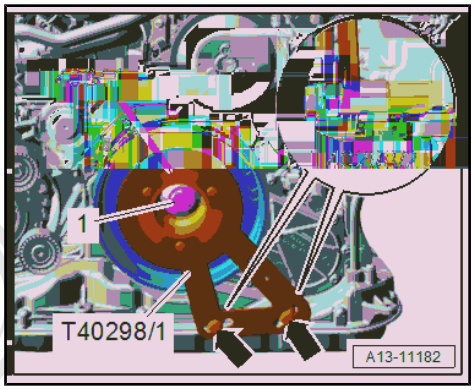

– Remove the bolt -1-.

– Remove the counterhold tool with the belt pulley.

Installing

Install in reverse order of removal and note the following:

- Replace the bolts that were tightened with an additional turn after removing them.

– Position the crankshaft belt pulley -1- on the crankshaft -2- and secure it with a new bolt. Pay attention to the alignment sleeve -arrow- at the same time.

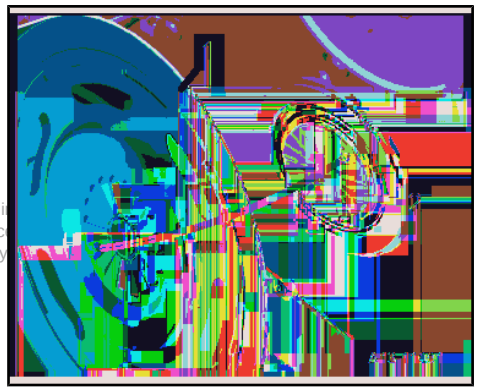

Protected by copyright. Copying for private or commercial purposes, in part or i
permitted unless authorised by AUDI AG. AUDI AG does not guarantee or acc
with respect to the correctness of information in this document. Copyright by

– Position the -T40298/1- with the -T40341- on the belt pulley and secure with the bolts -arrows- (23 Nm) by placing the -T40298/2- underneath.

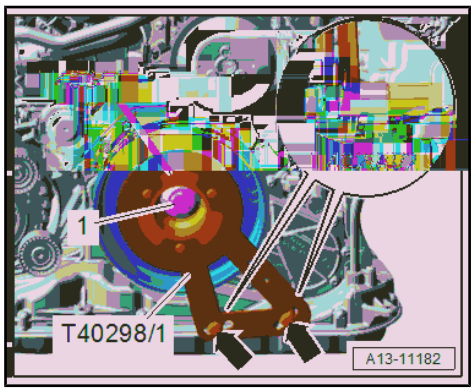

– Tighten the belt pulley bolt -1-.

– Remove the counterhold tool.

– Install the coolant pump ribbed belt. Refer to ⇒ “1.3.3 Ribbed Belt for Coolant Pump, Removing and Installing, Vehicles with High-Voltage System”, page 93 .

Tightening Specifications

♦ Refer to ⇒ “1.1.2 Overview - Cylinder Block Belt Pulley Side, Vehicles with High-Voltage System”, page 89

1.9 Crankshaft Seal, Replacing, Belt Pulley Side

All procedures are described. Refer to ⇒ Servicing – 6-Cylinder TDI Common Rail Engine; Rep. Gr. 13 ; Belt Pulley Side Cylinder Block; Belt Pulley Side Crankshaft Seal, Removing and Installing .

1.10 Sealing Flange, Removing and Installing, Belt Pulley Side

Removing

– Drain the engine oil. Refer to ⇒ Maintenance ; Booklet 413 .

– Remove the oil filter element. Refer to ⇒ Maintenance ; Booklet 413 .

– Remove the fan shroud. Refer to ⇒ “4.3 Fan Shroud, Removing and Installing”, page 195 .

– Remove the right engine cover. Refer to ⇒ “3.1 Engine Cover, Removing and Installing”, page 77 .

cardiagn.com

– Unclip the EGR Cooling Bypass Valve 2 - N387- from the bracket on vehicles with an EGR auxiliary cooler.
– Remove the bolts -arrows- and move the bracket -1- for the Intake Flap Motor - V157- to the side.

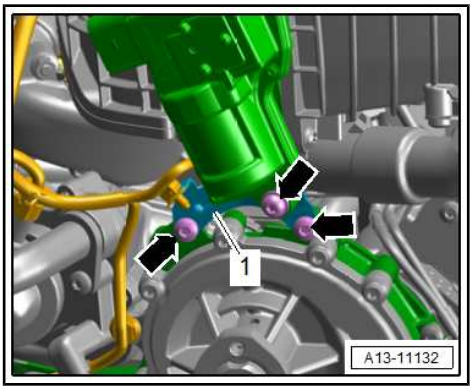

All additional procedures are described. Refer to ⇒ Servicing – 6-Cylinder TDI Common Rail Engine; Rep. Gr. 13 ; Belt Pulley Side Cylinder Block; Belt Pulley Side Sealing Flange, Removing and Installing .

Installing

Additional procedures:

– Install the oil filter element and fill the engine oil. Refer to ⇒ Maintenance ; Booklet 413 .
– Install the engine cover. Refer to ⇒ “3.1 Engine Cover, Removing and Installing”, page 77 .
– Install the fan shroud. Refer to ⇒ “4.3 Fan Shroud, Removing and Installing”, page 195 .

Tightening Specifications

♦ Refer to ⇒ Servicing – 6-Cylinder TDI Common Rail Engine; Rep. Gr. 23 ; Intake Manifold, Overview - Intake Manifold .

Protected by copyright. Copying for private or commercial purposes, in part or in whole, is not permitted unless authorised by AUDI AG. AUDI AG does not guarantee or accept any liability with respect to the correctness of information in this document. Copyright by AUDI AG.

cardiagn.com

2 Cylinder Block, Transmission Side

All procedures and components are described. Refer to ⇒ Servicing – 6-Cylinder TDI Common Rail Engine; Rep. Gr. 13 ; Cylinder Block, Transmission Side .

cardiagn.com

Protected by copyright. Copying for private or commercial purposes, in part or in whole, is not permitted unless authorised by AUDI AG. AUDI AG does not guarantee or accept any liability with respect to the correctness of information in this document. Copyright by AUDI AG.

3 Crankshaft

All procedures and components are described. Refer to ⇒ Servicing – 6-Cylinder TDI Common Rail Engine; Rep. Gr. 13 ; Crankshaft .

Protected by copyright. Copying for private or commercial purposes, in part or in whole, is not permitted unless authorised by AUDI AG. AUDI AG does not guarantee or accept any liability with respect to the correctness of information in this document. Copyright by AUDI AG.

cardiagn.com

4 Balance Shaft

All procedures and components are described. Refer to ⇒ Servicing – 6-Cylinder TDI Common Rail Engine; Rep. Gr. 13 ; Balance Shaft .

Protected by copyright. Copying for private or commercial purposes, in part or in whole, is not permitted unless authorised by AUDI AG. AUDI AG does not guarantee or accept any liability with respect to the correctness of information in this document. Copyright by AUDI AG.

cardiagn.com

5 Pistons and Connecting Rod

All procedures and components are described. Refer to ⇒ Servicing – 6-Cylinder TDI Common Rail Engine; Rep. Gr. 13 ; Pistons and Connecting Rod .

Protected by copyright. Copying for private or commercial purposes, in part or in whole, is not permitted unless authorised by AUDI AG. AUDI AG does not guarantee or accept any liability with respect to the correctness of information in this document. Copyright by AUDI AG.

cardiagn.com

6 Special Tools

Special tools and workshop equipment required

- Locking Pin - T10060A- (quantity: 2)

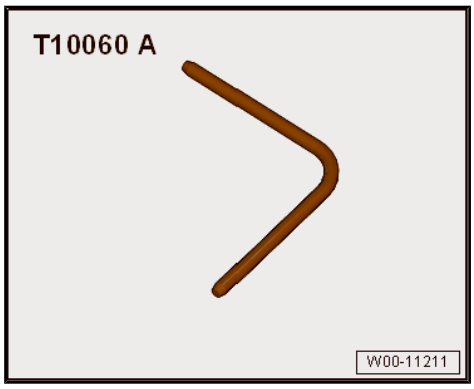

- Not illustrated:
- Counterhold Tool - T40298-
- Counterhold Tool - T40298/1-
- Counterhold Tool - Spacer Sleeves - T40298/2-

Protected by copyright. Copying for private or commercial purposes, in part or in whole, is not permitted unless authorised by AUDI AG. AUDI AG does not guarantee or accept any liability with respect to the correctness of information in this document. Copyright by AUDI AG.

cardiagn.com

15 – Cylinder Head, Valvetrain

1 Timing Chain Cover

⇒ “1.1 Overview - Timing Chain Cover”, page 103

⇒ “1.2 Timing Chain Cover, Removing and Installing”, page 105

1.1 Overview - Timing Chain Cover

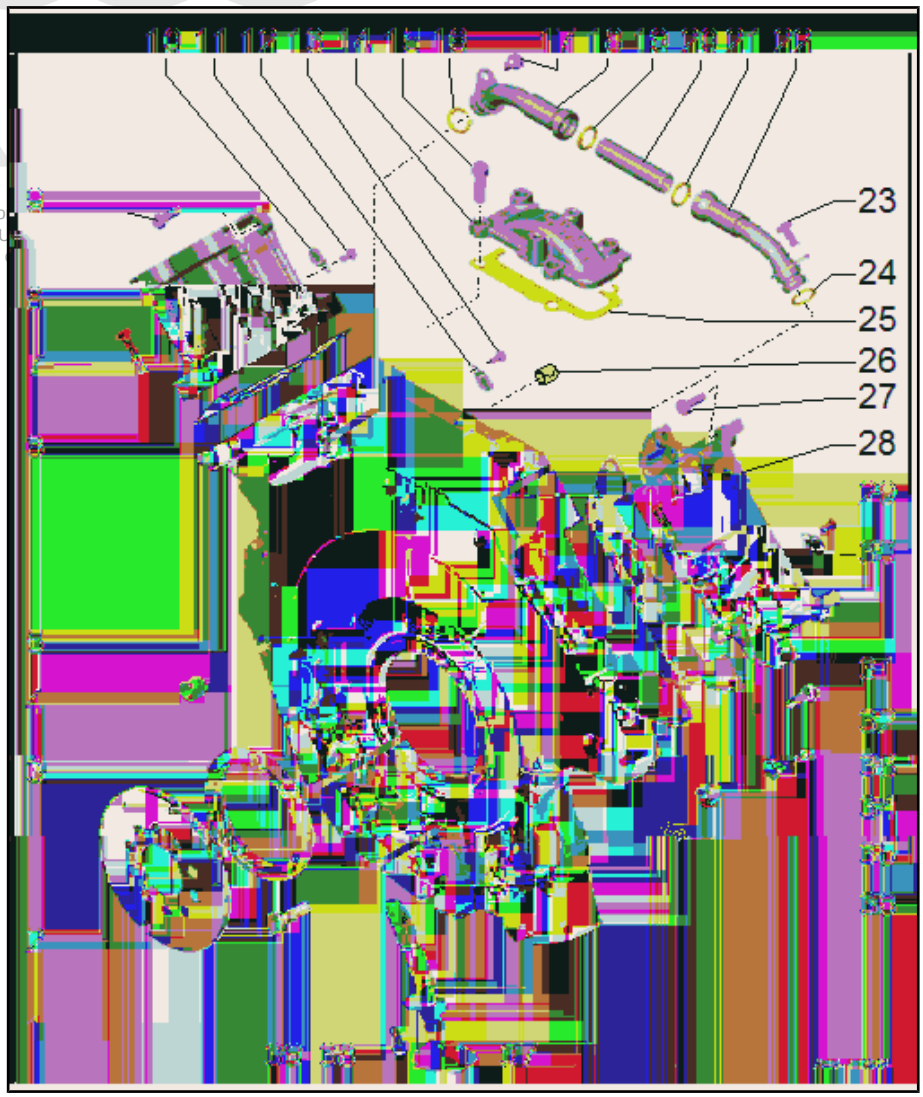

1 - Bolt

- ❑ Tightening specifications. Refer to ⇒ Servicing – 6-Cylinder TDI Common Rail Engine; Rep. Gr. 15 ; Timing Chain Cover; Overview - Timing Chain Cover .

2 - Sensor Wheel

- ❑ For the Engine Speed Sensor - G28-
- ❑ Removing and installing. Refer to ⇒ Servicing – 6-Cylinder TDI Common Rail Engine; Rep. Gr. 13 ; Crankshaft; Sensor Wheel, Removing and Installing .

3 - Seal

- ❑ For the crankshaft on the transmission side
- ❑ Replacing. Refer to ⇒ Servicing – 6-Cylinder TDI Common Rail Engine; Rep. Gr. 13 ; Transmission Side Cylinder Block; Transmission Side Crankshaft Seal, Replacing .

4 - Lower Timing Chain Cover

- ❑ Removing and installing. Refer to ⇒ “1.2.3 Lower Timing Chain Cover, Removing and Installing”, page 106 .

5 - Alignment Sleeve

- ❑ Quantity: 2

6 - Seal

- ❑ Installation instructions. Refer to ⇒ Servicing – 6-Cylinder TDI Common Rail Engine; Rep. Gr. 15 ; Timing Chain Cover; Overview - Timing Chain Cover .

7 - Bolt

- ❑ Tightening specifications. Refer to ⇒ Servicing – 6-Cylinder TDI Common Rail Engine; Rep. Gr. 15 ; Timing Chain Cover; Overview - Timing Chain Cover .

cardiagn.com

8 - Left Timing Chain Cover

- ❑ Removing and installing. Refer to ⇒ “1.2.1 Left Upper Timing Chain Cover, Removing and Installing”, page 105 .

9 - Bolt

- ❑ Tightening specifications. Refer to ⇒ Servicing – 6-Cylinder TDI Common Rail Engine; Rep. Gr. 15 ; Timing Chain Cover; Overview - Timing Chain Cover .

10 - Leaf Valve

- ❑ For the crankcase ventilation

11 - Bolt

- ❑ Tightening specifications. Refer to ⇒ Servicing – 6-Cylinder TDI Common Rail Engine; Rep. Gr. 15 ; Timing Chain Cover; Overview - Timing Chain Cover .

12 - Leaf Valve

- ❑ For the crankcase ventilation

13 - Bolt

- ❑ Tightening specifications. Refer to ⇒ Servicing – 6-Cylinder TDI Common Rail Engine; Rep. Gr. 15 ; Timing Chain Cover; Overview - Timing Chain Cover .

14 - Cover

15 - Bolt

- ❑ Tightening specifications. Refer to ⇒ Servicing – 6-Cylinder TDI Common Rail Engine; Rep. Gr. 15 ; Timing Chain Cover; Overview - Timing Chain Cover .

16 - O-ring

- ❑ Installation instructions. Refer to ⇒ Servicing – 6-Cylinder TDI Common Rail Engine; Rep. Gr. 15 ; Timing Chain Cover; Overview - Timing Chain Cover .

17 - Bolt

- ❑ Tightening specifications. Refer to ⇒ Servicing – 6-Cylinder TDI Common Rail Engine; Rep. Gr. 15 ; Timing Chain Cover; Overview - Timing Chain Cover .

18 - Line

- ❑ For the crankcase ventilation

19 - O-Ring

- ❑ Installation instructions. Refer to ⇒ Servicing – 6-Cylinder TDI Common Rail Engine; Rep. Gr. 15 ; Timing Chain Cover; Overview - Timing Chain Cover .

Protected by copyright. Copying for private or commercial purposes, in part or in whole, is not permitted unless authorised by AUDI AG. AUDI AG does not guarantee or accept any liability with respect to the correctness of information in this document. Copyright by AUDI AG.

20 - Line

- ❑ For the crankcase ventilation

21 - O-Ring

- ❑ Installation instructions. Refer to ⇒ Servicing – 6-Cylinder TDI Common Rail Engine; Rep. Gr. 15 ; Timing Chain Cover; Overview - Timing Chain Cover .

22 - Line

- ❑ For the crankcase ventilation

23 - Bolt

- ❑ Tightening specifications. Refer to ⇒ Servicing – 6-Cylinder TDI Common Rail Engine; Rep. Gr. 15 ; Timing Chain Cover; Overview - Timing Chain Cover .

24 - O-Ring

- ❑ Installation instructions. Refer to ⇒ Servicing – 6-Cylinder TDI Common Rail Engine; Rep. Gr. 15 ; Timing Chain Cover; Overview - Timing Chain Cover .

25 - Seal

- ❑ Installation instructions. Refer to ⇒ Servicing – 6-Cylinder TDI Common Rail Engine; Rep. Gr. 15 ; Timing Chain Cover; Overview - Timing Chain Cover .

26 - Adapter Sleeve

- ❑ Quantity: 3

cardiagn.com

27 - Bolt

- ❑ Tightening specifications. Refer to ⇒ Servicing – 6-Cylinder TDI Common Rail Engine; Rep. Gr. 15 ; Timing Chain Cover; Overview - Timing Chain Cover .

28 - Right Timing Chain Cover

- ❑ Removing and installing. Refer to ⇒ Servicing – 6-Cylinder TDI Common Rail Engine; Rep. Gr. 15 ; Timing Chain Cover; Timing Chain Cover, Removing and Installing .

29 - Bolt

- ❑ Tightening specifications. Refer to ⇒ Servicing – 6-Cylinder TDI Common Rail Engine; Rep. Gr. 15 ; Timing Chain Cover; Overview - Timing Chain Cover .

30 - Leaf Valve

- ❑ For the crankcase ventilation

31 - Bolt

- ❑ Tightening specifications. Refer to ⇒ Servicing – 6-Cylinder TDI Common Rail Engine; Rep. Gr. 15 ; Timing Chain Cover; Overview - Timing Chain Cover .

32 - Seal

- ❑ Installation instructions. Refer to ⇒ Servicing – 6-Cylinder TDI Common Rail Engine; Rep. Gr. 15 ; Timing Chain Cover; Overview - Timing Chain Cover .

33 - Bolt

- ❑ Tightening specifications. Refer to ⇒ Servicing – 6-Cylinder TDI Common Rail Engine; Rep. Gr. 15 ; Timing Chain Cover; Overview - Timing Chain Cover .

34 - Leaf Valve

- ❑ For the crankcase ventilation

35 - Alignment Sleeve

- ❑ Quantity: 2

36 - Sealing Piece

- ❑ Quantity: 2

37 - Not Installed

38 - Bolt

- ❑ Tightening specifications. Refer to ⇒ Servicing – 6-Cylinder TDI Common Rail Engine; Rep. Gr. 15 ; Timing Chain Cover; Overview - Timing Chain Cover .

39 - Engine Speed Sensor - G28-

- ❑ Removing and installing. Refer to ⇒ Servicing – 6-Cylinder TDI Common Rail Engine; Rep. Gr. 28 ; Glow Plug System; Engine Speed Sensor - G28- , Removing and Installing .

Protected by copyright. Copying for private or commercial purposes, in part or in whole, is not permitted unless authorised by AUDI AG. AUDI AG does not guarantee or accept any liability with respect to the correctness of information in this document. Copyright by AUDI AG.

1.2 Timing Chain Cover, Removing and Installing

⇒ “1.2.1 Left Upper Timing Chain Cover, Removing and Installing”, page 105

⇒ “1.2.2 Right Upper Timing Chain Cover, Removing and Installing”, page 106

⇒ “1.2.3 Lower Timing Chain Cover, Removing and Installing”, page 106

1.2.1 Left Upper Timing Chain Cover, Removing and Installing

Removing

– Remove the emissions control module. Refer to ⇒ “2.2 Emissions Control Module, Removing and Installing”, page 268 .

cardiagn.com

All additional procedures are described. Refer to ⇒ Servicing – 6-Cylinder TDI Common Rail Engine; Rep. Gr. 15 ; Timing Chain Cover; Timing Chain Cover, Removing and Installing .

Installing

Additional procedures:

– Install the emissions control module. Refer to ⇒ "2.2 Emissions Control Module, Removing and Installing", page 268 .

1.2.2 Right Upper Timing Chain Cover, Removing and Installing

All procedures are described. Refer to ⇒ Servicing – 6-Cylinder TDI Common Rail Engine; Rep. Gr. 15 ; Timing Chain Cover; Timing Chain Cover, Removing and Installing .

1.2.3 Lower Timing Chain Cover, Removing and Installing

Removing

- The transmission is removed. Refer to ⇒ 8-Speed Automatic Transmission; Rep. Gr. 37 ; Transmission, Removing and Installing; Transmission Removing .

All additional procedures are described. Refer to ⇒ Servicing – 6-Cylinder TDI Common Rail Engine; Rep. Gr. 15 ; Timing Chain Cover; Timing Chain Cover, Removing and Installing .

Protected by copyright. Copying for private or commercial purposes, in part or in whole, is not permitted unless authorised by AUDI AG. AUDI AG does not guarantee or accept any liability with respect to the correctness of information in this document. Copyright by AUDI AG.

cardiagn.com

2 Chain Drive

All procedures and components are described. Refer to ⇒ Servicing – 6-Cylinder TDI Common Rail Engine; Rep. Gr. 15 ; Chain Drive .

Protected by copyright. Copying for private or commercial purposes, in part or in whole, is not permitted unless authorised by AUDI AG. AUDI AG does not guarantee or accept any liability with respect to the correctness of information in this document. Copyright by AUDI AG.

cardiagn.com

3 Cylinder Head

⇒ “3.1 Overview - Cylinder Head”, page 108

⇒ “3.2 Overview - Cylinder Head Cover”, page 110

⇒ “3.3 Cylinder Head, Removing and Installing”, page 111

⇒ “3.4 Cylinder Head Cover, Removing and Installing”, page 112

⇒ “3.5 Fuel Injector Seals, Removing and Installing”, page 112

⇒ “3.6 Compression, Checking”, page 113

Protected by copyright. Copying for private or commercial purposes, in part or in whole, is not permitted unless authorized by AUDI AG. AUDI AG does not guarantee or accept any liability with respect to the correctness of information in this document. Copyright by AUDI AG.

3.1 Overview - Cylinder Head

1 - Cylinder Head Gasket

- ❑ Replacing. Refer to ⇒ Servicing – 6-Cylinder TDI Common Rail Engine; Rep. Gr. 15 ; Cylinder Head; Cylinder Head, Removing and Installing .
- ❑ Installation instructions. Refer to ⇒ Servicing – 6-Cylinder TDI Common Rail Engine; Rep. Gr. 15 ; Cylinder Head; Overview - Cylinder Head .

2 - Bolt

- ❑ Tightening specifications. Refer to ⇒ Servicing – 6-Cylinder TDI Common Rail Engine; Rep. Gr. 15 ; Cylinder Head; Overview - Cylinder Head .

3 - Bracket

4 - O-ring

- ❑ Installation instructions. Refer to ⇒ Servicing – 6-Cylinder TDI Common Rail Engine; Rep. Gr. 15 ; Cylinder Head; Overview - Cylinder Head .

5 - Coolant Line

6 - Bolt

- ❑ Tightening specifications. Refer to ⇒ Servicing – 6-Cylinder TDI Common Rail Engine; Rep. Gr. 15 ; Cylinder Head; Overview - Cylinder Head .

7 - Seal

- ❑ Installation instructions. Refer to ⇒ Servicing – 6-Cylinder TDI Common Rail Engine; Rep. Gr. 15 ; Cylinder Head; Overview - Cylinder Head .

8 - Bolt

- ❑ Tightening specifications. Refer to ⇒ Servicing – 6-Cylinder TDI Common Rail Engine; Rep. Gr. 15 ; Cylinder Head; Overview - Cylinder Head .

cardiagn.com

9 - Engine Lifting Eye

10 - O-ring

- ❑ Installation instructions. Refer to ⇒ Servicing – 6-Cylinder TDI Common Rail Engine; Rep. Gr. 15 ; Cylinder Head; Overview - Cylinder Head .

11 - Coolant Line

12 - Bolt

- ❑ Tightening specifications. Refer to ⇒ Servicing – 6-Cylinder TDI Common Rail Engine; Rep. Gr. 15 ; Cylinder Head; Overview - Cylinder Head .

13 - Bolt

- ❑ Tightening specifications. Refer to ⇒ Servicing – 6-Cylinder TDI Common Rail Engine; Rep. Gr. 15 ; Cylinder Head; Overview - Cylinder Head .

14 - Engine Lifting Eye

15 - Bolt

- ❑ Tightening specifications. Refer to ⇒ Servicing – 6-Cylinder TDI Common Rail Engine; Rep. Gr. 15 ; Cylinder Head; Overview - Cylinder Head .

16 - Cylinder Head

- ❑ Shown for cylinder bank 2 (left)
- ❑ Removing and installing. Refer to ⇒ Servicing – 6-Cylinder TDI Common Rail Engine; Rep. Gr. 15 ; Cylinder Head; Cylinder Head, Removing and Installing .
- ❑ Installation instructions. Refer to ⇒ Servicing – 6-Cylinder TDI Common Rail Engine; Rep. Gr. 15 ; Cylinder Head; Overview - Cylinder Head .

Protected by copyright. Copying for private or commercial purposes, in part or in whole, is not permitted unless authorised by AUDI AG. AUDI AG does not guarantee or accept any liability with respect to the correctness of information in this document. Copyright by AUDI AG.

cardiagn.com

3.2 Overview - Cylinder Head Cover

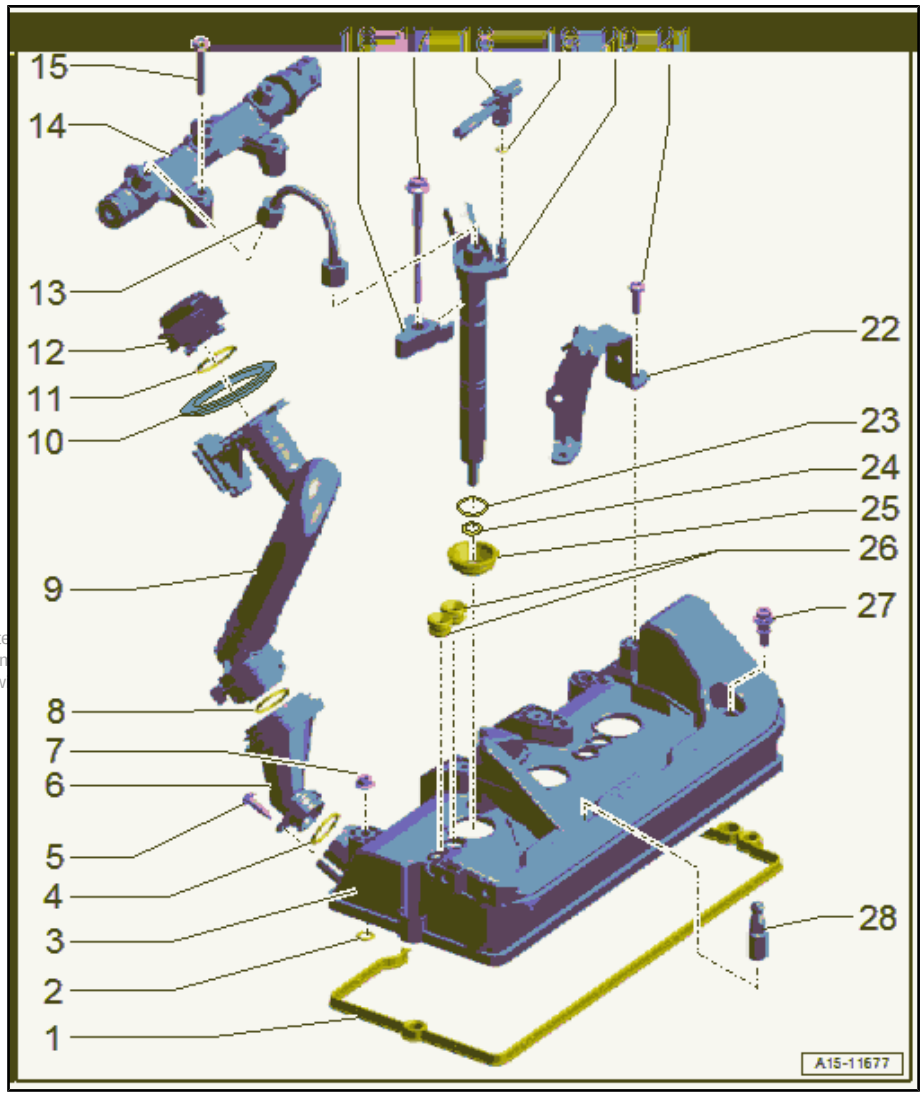

1 - Seal

- ❑ Installation instructions. Refer to ⇒ Servicing – 6-Cylinder TDI Common Rail Engine; Rep. Gr. 15 ; Cylinder Head; Overview - Cylinder Head Cover .

2 - O-ring

- ❑ Installation instructions. Refer to ⇒ Servicing – 6-Cylinder TDI Common Rail Engine; Rep. Gr. 15 ; Cylinder Head; Overview - Cylinder Head Cover .

3 - Cylinder Head Cover

- ❑ Shown for cylinder bank 2 (left)
- ❑ Removing and installing. Refer to ⇒ "3.4 Cylinder Head Cover, Removing and Installing", page 112 .

4 - O-ring

- ❑ Installation instructions. Refer to ⇒ Servicing – 6-Cylinder TDI Common Rail Engine; Rep. Gr. 15 ; Cylinder Head; Overview - Cylinder Head Cover .

5 - Bolt

- ❑ Tightening specifications. Refer to ⇒ Servicing – 6-Cylinder TDI Common Rail Engine; Rep. Gr. 15 ; Cylinder Head; Overview - Cylinder Head Cover .

6 - Oil Filler Neck

7 - Nut

- ❑ Tightening specifications. Refer to ⇒ Servicing – 6-Cylinder TDI Common Rail Engine; Rep. Gr. 15 ; Cylinder Head; Overview - Cylinder Head Cover .

8 - Seal

- ❑ Installation instructions. Refer to ⇒ Servicing – 6-Cylinder TDI Common Rail Engine; Rep. Gr. 15 ; Cylinder Head; Overview - Cylinder Head Cover .

9 - Extension

- ❑ For oil filler tube

10 - Grommet

11 - Seal

- ❑ For the cap
- ❑ Installation instructions. Refer to ⇒ Servicing – 6-Cylinder TDI Common Rail Engine; Rep. Gr. 15 ; Cylinder Head; Overview - Cylinder Head Cover .

cardiagn.com

12 - Cap

13 - High Pressure Line

- ❑ Installing. Refer to ⇒ Servicing – 6-Cylinder TDI Common Rail Engine; Rep. Gr. 23 ; Fuel Injectors/High Pressure Reservoir (Rail); High Pressure Lines, Removing and Installing .

14 - High Pressure Reservoir (Rail)

15 - Bolt

- ❑ Tightening specifications. Refer to ⇒ Servicing – 6-Cylinder TDI Common Rail Engine; Rep. Gr. 23 ; Fuel Injectors/High Pressure Reservoir (Rail); Overview - Fuel Injectors (Injectors) .

16 - Tensioning Claw

- ❑ Removing and installing. Refer to ⇒ “5.8 Fuel Injectors, Removing and Installing”, page 238 .

17 - Bolt

- ❑ Tightening specifications. Refer to ⇒ Servicing – 6-Cylinder TDI Common Rail Engine; Rep. Gr. 23 ; Fuel Injectors/High Pressure Reservoir (Rail); Overview - Fuel Injectors (Injectors) .

18 - Fuel Return Hose

19 - O-ring

- ❑ Installation instructions. Refer to ⇒ Servicing – 6-Cylinder TDI Common Rail Engine; Rep. Gr. 15 ; Cylinder Head; Overview - Cylinder Head Cover .

20 - Fuel Injector

- ❑ Removing and installing. Refer to ⇒ “5.8 Fuel Injectors, Removing and Installing”, page 238 .

21 - Bolt

- ❑ Tightening specifications. Refer to ⇒ Servicing – 6-Cylinder TDI Common Rail Engine; Rep. Gr. 15 ; Cylinder Head; Overview - Cylinder Head Cover .

22 - Bracket

23 - O-ring

- ❑ Installation instructions. Refer to ⇒ Servicing – 6-Cylinder TDI Common Rail Engine; Rep. Gr. 15 ; Cylinder Head; Overview - Cylinder Head Cover .

24 - Copper Gasket

- ❑ Installation instructions. Refer to ⇒ Servicing – 6-Cylinder TDI Common Rail Engine; Rep. Gr. 15 ; Cylinder Head; Overview - Cylinder Head Cover .

25 - Seal

- ❑ For the fuel injector
- ❑ Replacing. Refer to ⇒ Servicing – 6-Cylinder TDI Common Rail Engine; Rep. Gr. 15 ; Cylinder Head; Fuel Injector Seals, Removing and Installing .

26 - Grommets

- ❑ Installation instructions. Refer to ⇒ Servicing – 6-Cylinder TDI Common Rail Engine; Rep. Gr. 15 ; Cylinder Head; Overview - Cylinder Head Cover .

27 - Bolt

Protected by copyright. Copying for private or commercial purposes, in part or in whole, is not permitted unless authorised by AUDI AG. AUDI AG does not guarantee or accept any liability with respect to the correctness of information in this document. Copyright by AUDI AG.

- ❑ With seal
- ❑ Tightening specifications. Refer to ⇒ Servicing – 6-Cylinder TDI Common Rail Engine; Rep. Gr. 15 ; Cylinder Head; Overview - Cylinder Head Cover .

28 - Ball Pin

- ❑ Tightening specifications. Refer to ⇒ Servicing – 6-Cylinder TDI Common Rail Engine; Rep. Gr. 15 ; Cylinder Head; Overview - Cylinder Head Cover .

3.3 Cylinder Head, Removing and Installing

Removing

All procedures are described. Refer to ⇒ Servicing – 6-Cylinder TDI Common Rail Engine; Rep. Gr. 15 ; Cylinder Head; Cylinder Head, Removing and Installing .

cardiagn.com

Installing

Additional procedures:

– Change the engine oil. Refer to ⇒ Maintenance ; Booklet 413 .

3.4 Cylinder Head Cover, Removing and Installing

⇒ "3.4.1 Cylinder Head Cover Bank 1 (Right), Removing and Installing", page 112

⇒ "3.4.2 Cylinder Head Cover Bank 2 (Left), Removing and Installing", page 112

3.4.1 Cylinder Head Cover Bank 1 (Right), Removing and Installing

All procedures are described. Refer to ⇒ Servicing – 6-Cylinder TDI Common Rail Engine; Rep. Gr. 15 ; Cylinder Head; Cylinder Head Cover, Removing and Installing .

3.4.2 Cylinder Head Cover Bank 2 (Left), Removing and Installing

Special tools and workshop equipment required

♦ Hose Clamps - Up To 25mm - 3094- for vehicles with high-voltage system

Removing

– Remove the air filter housing. Refer to ⇒ "3.2 Air Filter Housing, Removing and Installing", page 229 .

Vehicle with High-Voltage System

– Mark the connectors -1 and 2- to the temperature sensors and disconnect.

– Clamp off the coolant hoses -3- using the -3094- .

– Loosen the hose clamp -arrow- remove the coolant hose and push toward the rear.

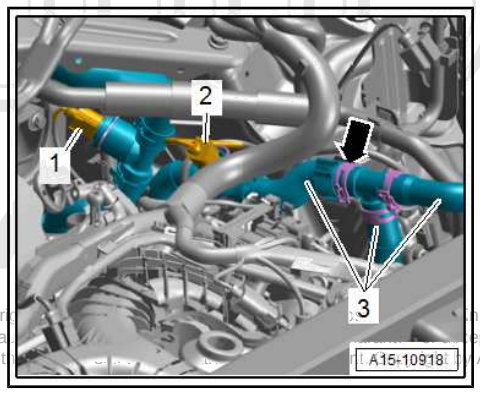

All additional procedures are described. Refer to ⇒ Servicing – 6-Cylinder TDI Common Rail Engine; Rep. Gr. 15 ; Cylinder Head; Cylinder Head Cover, Removing and Installing .

Protected by copyr... whole, is not permitted unless a... ept any liability with respect to t... AUDI AG.

Installing

Additional procedures:

• Secure all hose connections with hose clamps that match the ones used in series production. Refer to the Parts Catalog.

– Vehicles with high-voltage system: Fill with coolant. Refer to ⇒ "1.3.2 Coolant, Draining and Filling, Vehicle with High-Voltage System, Engine Coolant Circuit", page 143 .

– Install the air filter housing. Refer to ⇒ "3.2 Air Filter Housing, Removing and Installing", page 229 .

3.5 Fuel Injector Seals, Removing and Installing

All procedures are described. Refer to ⇒ Servicing – 6-Cylinder TDI Common Rail Engine; Rep. Gr. 15 ; Cylinder Head; Fuel Injector Seals, Removing and Installing .

cardiagn.com

3.6 Compression, Checking

All procedures are described. Refer to ⇒ Servicing – 6-Cylinder TDI Common Rail Engine; Rep. Gr. 15 ; Cylinder Head; Compression, Checking .

cardiagn.com

Protected by copyright. Copying for private or commercial purposes, in part or in whole, is not permitted unless authorised by AUDI AG. AUDI AG does not guarantee or accept any liability with respect to the correctness of information in this document. Copyright by AUDI AG.

4 Valvetrain

All procedures and components are described. Refer to ⇒ Servicing – 6-Cylinder TDI Common Rail Engine; Rep. Gr. 15 ; Valvetrain .

cardiagn.com

Protected by copyright. Copying for private or commercial purposes, in part or in whole, is not permitted unless authorised by AUDI AG. AUDI AG does not guarantee or accept any liability with respect to the correctness of information in this document. Copyright by AUDI AG.

5 Intake and Exhaust Valves

All procedures and components are described. Refer to ⇒ Servicing – 6-Cylinder TDI Common Rail Engine; Rep. Gr. 15 ; Intake and Exhaust Valves .

Protected by copyright. Copying for private or commercial purposes, in part or in whole, is not permitted unless authorised by AUDI AG. AUDI AG does not guarantee or accept any liability with respect to the correctness of information in this document. Copyright by AUDI AG.

cardiagn.com

6 Special Tools

Special tools and workshop equipment required

- Hose Clamps - Up To 25mm - 3094- for vehicles with high-voltage system

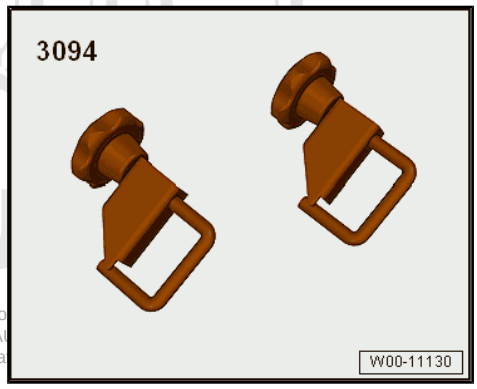

Protected by copyright. Copying for private o
permitted unless authorised by AUDI AG. A
with respect to the correctness of informa

cardiagn.com

17 – Lubrication

1 Oil Pan/Oil Pump

⇒ “1.1 Overview - Oil Pan/Oil Pump”, page 117

⇒ “1.2 Engine Oil”, page 120

⇒ “1.3 Oil Pan Lower Section, Removing and Installing”, page 120

⇒ “1.4 Oil Pan Upper Section, Removing and Installing”, page 120

⇒ “1.5 Oil Pump, Removing and Installing”, page 120

⇒ “1.6 Oil Level Thermal Sensor G266 , Removing and Installing”, page 120

Protected by copyright. Copying for private or commercial purposes, in part or in whole, is not permitted unless authorised by AUDI AG. AUDI AG does not guarantee or accept any liability with respect to the correctness of information in this document. Copyright by AUDI AG.

1.1 Overview - Oil Pan/Oil Pump

Oil Pan Lower Section/Oil Pump

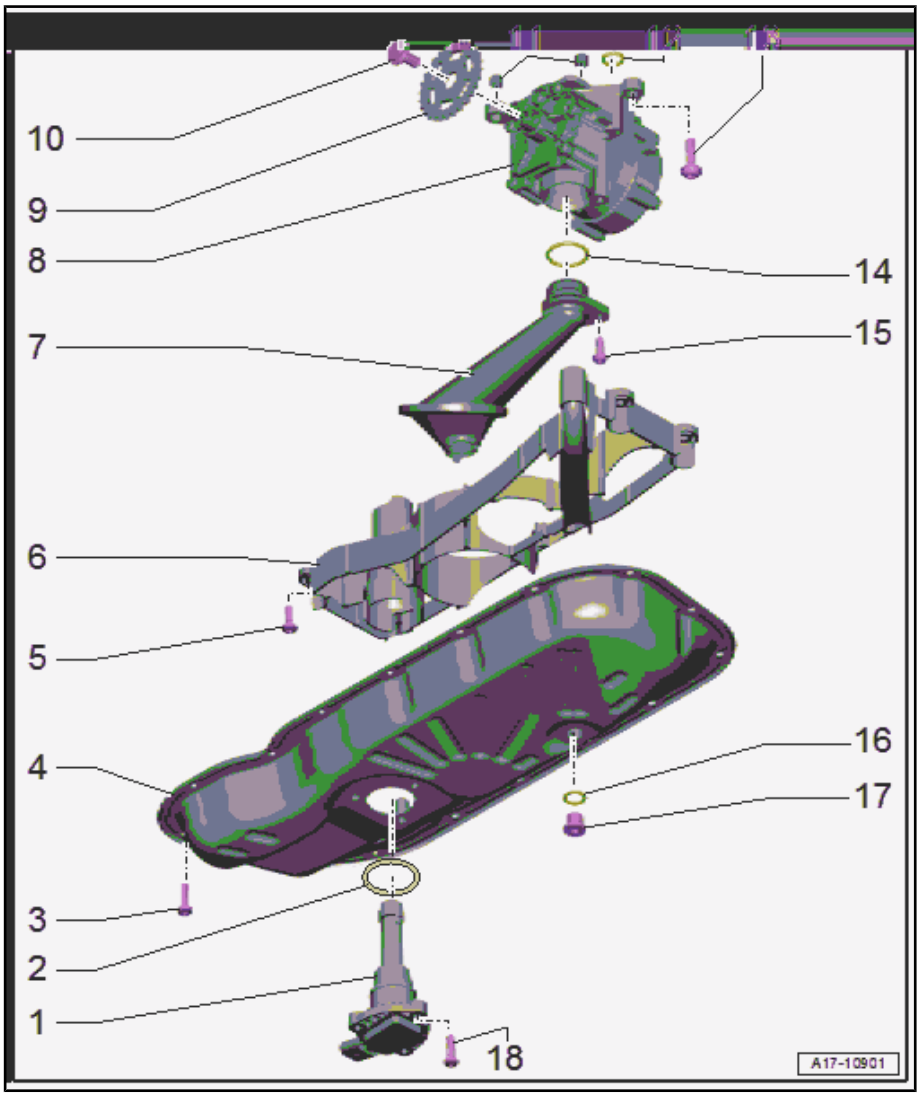

1 - Oil Level Thermal Sensor - G266-

- ❑ Removing and installing. Refer to ⇒ Servicing – 6-Cylinder TDI Common Rail Engine; Rep. Gr. 17 ; Oil Pan/Oil Pump; Oil Level Thermal Sensor - G266- , Removing and Installing .

2 - Seal

- ❑ Installation instructions. Refer to ⇒ Servicing – 6-Cylinder TDI Common Rail Engine; Rep. Gr. 17 ; Oil Pan/Oil Pump; Overview - Oil Pan/Oil Pump .

3 - Bolt

- ❑ Tightening specifications. Refer to ⇒ Servicing – 6-Cylinder TDI Common Rail Engine; Rep. Gr. 17 ; Oil Pan/Oil Pump; Overview - Oil Pan/Oil Pump .

4 - Oil Pan Lower Section

- ❑ Removing and installing. Refer to ⇒ Servicing – 6-Cylinder TDI Common Rail Engine; Rep. Gr. 17 ; Oil Pan/Oil Pump; Oil Pan Lower Section, Removing and Installing .

5 - Bolt

- ❑ Tightening specifications. Refer to ⇒ Servicing – 6-Cylinder TDI Common Rail Engine; Rep. Gr. 17 ; Oil Pan/Oil Pump; Overview - Oil Pan/Oil Pump .

cardiagn.com

6 - Oil Baffle

7 - Suction Line

8 - Oil Pump

- ❑ With brake booster vacuum pump
- ❑ Removing and installing. Refer to ⇒ Servicing – 6-Cylinder TDI Common Rail Engine; Rep. Gr. 17 ; Oil Pan/Oil Pump; Oil Pump, Removing and Installing .

9 - Chain Sprocket

- ❑ For the oil pump

10 - Bolt

- ❑ Tightening specifications. Refer to ⇒ Servicing – 6-Cylinder TDI Common Rail Engine; Rep. Gr. 17 ; Oil Pan/Oil Pump; Overview - Oil Pan/Oil Pump .

11 - Alignment Sleeves

12 - Seal

- ❑ Installation instructions. Refer to ⇒ Servicing – 6-Cylinder TDI Common Rail Engine; Rep. Gr. 17 ; Oil Pan/Oil Pump; Overview - Oil Pan/Oil Pump .

13 - Bolt

- ❑ Tightening specifications. Refer to ⇒ Servicing – 6-Cylinder TDI Common Rail Engine; Rep. Gr. 17 ; Oil Pan/Oil Pump; Overview - Oil Pan/Oil Pump .

14 - O-Ring

- ❑ Installation instructions. Refer to ⇒ Servicing – 6-Cylinder TDI Common Rail Engine; Rep. Gr. 17 ; Oil Pan/Oil Pump; Overview - Oil Pan/Oil Pump .

15 - Bolt

- ❑ Tightening specifications. Refer to ⇒ Servicing – 6-Cylinder TDI Common Rail Engine; Rep. Gr. 17 ; Oil Pan/Oil Pump; Overview - Oil Pan/Oil Pump .

16 - Seal

- ❑ Installation instructions. Refer to ⇒ Servicing – 6-Cylinder TDI Common Rail Engine; Rep. Gr. 17 ; Oil Pan/Oil Pump; Overview - Oil Pan/Oil Pump .

17 - Oil Drain Plug

- ❑ Tightening specifications. Refer to ⇒ Servicing – 6-Cylinder TDI Common Rail Engine; Rep. Gr. 17 ; Oil Pan/Oil Pump; Overview - Oil Pan/Oil Pump .

18 - Bolt

- ❑ Tightening specifications. Refer to ⇒ Servicing – 6-Cylinder TDI Common Rail Engine; Rep. Gr. 17 ; Oil Pan/Oil Pump; Overview - Oil Pan/Oil Pump .

Oil Pan Upper Section

Protected by copyright. Copying for private or commercial purposes, in part or in whole, is not permitted unless authorised by AUDI AG. AUDI AG does not guarantee or accept any liability with respect to the correctness of information in this document. Copyright by AUDI AG.

cardiagn.com

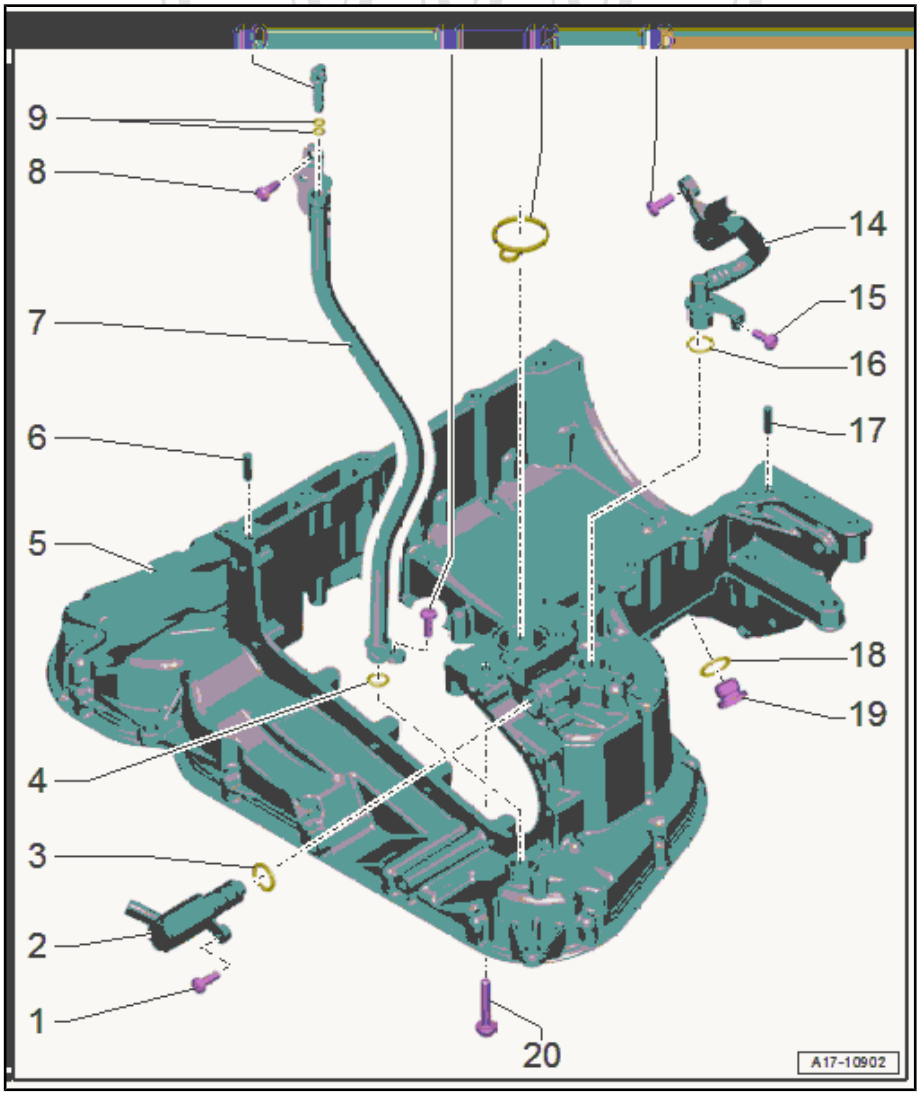

1 - Bolt

- ❑ Tightening specifications. Refer to ⇒ Servicing – 6-Cylinder TDI Common Rail Engine; Rep. Gr. 17 ; Oil Pan/Oil Pump; Overview - Oil Pan/Oil Pump .

2 - Oil Pressure Regulation Valve - N428-

- ❑ Removing and installing. Refer to ⇒ Servicing – 6-Cylinder TDI Common Rail Engine; Rep. Gr. 17 ; Oil Filter/Oil Pressure Switch; Oil Pressure Regulation Valve - N428- , Removing and Installing .

3 - O-ring

- ❑ Installation instructions. Refer to ⇒ Servicing – 6-Cylinder TDI Common Rail Engine; Rep. Gr. 17 ; Oil Pan/Oil Pump; Overview - Oil Pan/Oil Pump .

4 - O-Ring

- ❑ Installation instructions. Refer to ⇒ Servicing – 6-Cylinder TDI Common Rail Engine; Rep. Gr. 17 ; Oil Pan/Oil Pump; Overview - Oil Pan/Oil Pump .

5 - Oil Pan Upper Section

- ❑ Removing and installing. Refer to ⇒ Servicing – 6-Cylinder TDI Common Rail Engine; Rep. Gr. 17 ; Oil Pan/Oil Pump; Oil Pan Upper Section, Removing and Installing .

6 - Alignment Sleeve

7 - Guide Tube

- ❑ For the oil dipstick

8 - Bolt

- ❑ Tightening specifications. Refer to ⇒ Servicing – 6-Cylinder TDI Common Rail Engine; Rep. Gr. 17 ; Oil Pan/Oil Pump; Overview - Oil Pan/Oil Pump .

9 - O-rings

- ❑ Installation instructions. Refer to ⇒ Servicing – 6-Cylinder TDI Common Rail Engine; Rep. Gr. 17 ; Oil Pan/Oil Pump; Overview - Oil Pan/Oil Pump .

10 - Plugs

11 - Bolt

- ❑ Tightening specifications. Refer to ⇒ Servicing – 6-Cylinder TDI Common Rail Engine; Rep. Gr. 17 ; Oil Pan/Oil Pump; Overview - Oil Pan/Oil Pump .

12 - Seal

- ❑ Installation instructions. Refer to ⇒ Servicing – 6-Cylinder TDI Common Rail Engine; Rep. Gr. 17 ; Oil Pan/Oil Pump; Overview - Oil Pan/Oil Pump .

cardiagn.com

13 - Bolt

- ❑ Tightening specifications. Refer to ⇒ Servicing – 6-Cylinder TDI Common Rail Engine; Rep. Gr. 17 ; Oil Pan/Oil Pump; Overview - Oil Pan/Oil Pump .

14 - Vacuum Line

- ❑ From the vacuum pump

15 - Bolt

- ❑ Tightening specifications. Refer to ⇒ Servicing – 6-Cylinder TDI Common Rail Engine; Rep. Gr. 17 ; Oil Pan/Oil Pump; Overview - Oil Pan/Oil Pump .

Protected by copyright. Copying for private or commercial purposes, in part or in whole, is not permitted unless authorised by AUDI AG. AUDI AG does not guarantee or accept any liability with respect to the correctness of information in this document. Copyright by AUDI AG.

16 - O-ring

- ❑ Installation instructions. Refer to ⇒ Servicing – 6-Cylinder TDI Common Rail Engine; Rep. Gr. 17 ; Oil Pan/Oil Pump; Overview - Oil Pan/Oil Pump .

17 - Alignment Sleeve

18 - Seal

- ❑ Installation instructions. Refer to ⇒ Servicing – 6-Cylinder TDI Common Rail Engine; Rep. Gr. 17 ; Oil Pan/Oil Pump; Overview - Oil Pan/Oil Pump .

19 - Plug

- ❑ For the “TDC” marking
- ❑ Tightening specifications. Refer to ⇒ Servicing – 6-Cylinder TDI Common Rail Engine; Rep. Gr. 17 ; Oil Pan/Oil Pump; Overview - Oil Pan/Oil Pump .

20 - Bolt

- ❑ Tightening specifications. Refer to ⇒ Servicing – 6-Cylinder TDI Common Rail Engine; Rep. Gr. 17 ; Oil Pan/Oil Pump; Overview - Oil Pan/Oil Pump .

1.2 Engine Oil

- ♦ Draining and filling the engine oil, checking the oil level and removing and installing the oil filter element. Refer to ⇒ Maintenance ; Booklet 413 .
- ♦ Oil capacities, oil specifications and viscosity classes. Refer to ⇒ Fluid Capacity Tables; Rep. Gr. 03

1.3 Oil Pan Lower Section, Removing and Installing

All procedures are described. Refer to ⇒ Servicing – 6-Cylinder TDI Common Rail Engine; Rep. Gr. 17 ; Oil Pan/Oil Pump; Oil Pan Lower Section, Removing and Installing .

1.4 Oil Pan Upper Section, Removing and Installing

All procedures are described. Refer to ⇒ Servicing – 6-Cylinder TDI Common Rail Engine; Rep. Gr. 17 ; Oil Pan/Oil Pump; Oil Pan Upper Section, Removing and Installing .

1.5 Oil Pump, Removing and Installing

All procedures are described. Refer to ⇒ Servicing – 6-Cylinder TDI Common Rail Engine; Rep. Gr. 17 ; Oil Pan/Oil Pump; Oil Pump, Removing and Installing .

1.6 Oil Level Thermal Sensor - G266- , Removing and Installing

All procedures are described. Refer to ⇒ Servicing – 6-Cylinder TDI Common Rail Engine; Rep. Gr. 17 ; Oil Pan/Oil Pump; Oil Level Thermal Sensor - G266- , Removing and Installing .

cardiagn.com

2 Engine Oil Cooler

All procedures and components are described. Refer to ⇒ Servicing – 6-Cylinder TDI Common Rail Engine; Rep. Gr. 17 ; Engine Oil Cooler .

Protected by copyright. Copying for private or commercial purposes, in part or in whole, is not permitted unless authorised by AUDI AG. AUDI AG does not guarantee or accept any liability with respect to the correctness of information in this document. Copyright by AUDI AG.

cardiagn.com

3 Oil Filter/Oil Pressure Switch

⇒ “3.1 Overview - Oil Filter”, page 122

⇒ “3.2 Oil Pressure Sensor G10 , Removing and Installing”, page 123

⇒ “3.3 Oil Pressure, Checking”, page 124

⇒ “3.4 Oil Filter Housing, Removing and Installing”, page 124

⇒ “3.5 Oil Pressure Regulation Valve N428 , Removing and Installing”, page 124

⇒ “3.6 Oil Temperature Sensor 2 G664 , Removing and Installing”, page 125

3.1 Overview - Oil Filter

1 - Bolt

- ❑ Tightening specifications. Refer to ⇒ Servicing – 6-Cylinder TDI Common Rail Engine; Rep. Gr. 17 ; Oil Filter/ Oil Pressure Switch; Overview - Oil Filter .

2 - Oil Filter Housing

- ❑ With Map Controlled Engine Cooling Thermostat - F265-
- ❑ Removing and installing. Refer to ⇒ “3.4 Oil Filter Housing, Removing and Installing”, page 124 .

3 - Seal

- ❑ No replacement part, permanently mounted to the oil pressure switch

4 - Oil Pressure Sensor - G10-

- ❑ Checking. Refer to Vehicle Diagnostic Tester .
- ❑ Removing and installing. Refer to ⇒ “3.2 Oil Pressure Sensor G10 , Removing and Installing”, page 123 .
- ❑ Tightening specifications. Refer to ⇒ Servicing – 6-Cylinder TDI Common Rail Engine; Rep. Gr. 17 ; Oil Filter/ Oil Pressure Switch; Overview - Oil Filter .

5 - Oil Filter Element

- ❑ Removing and installing. Refer to ⇒ Maintenance ; Booklet 413 .

6 - O-ring

- ❑ Installation instructions. Refer to ⇒ Servicing – 6-Cylinder TDI Common Rail Engine; Rep. Gr. 17 ; Oil Filter/Oil Pressure Switch; Overview - Oil Filter .

Protected by copyright. Copying for private or commercial purposes, in part or in whole, is not permitted unless authorised by Audi AG. Audi AG does not guarantee or accept any liability with respect to the correctness of information in this document. Copyright by Audi AG.
cardiagn.com

7 - Cap

- ❑ With oil filter by-pass valve
- ❑ Tightening specifications. Refer to ⇒ Servicing – 6-Cylinder TDI Common Rail Engine; Rep. Gr. 17 ; Oil Filter/Oil Pressure Switch; Overview - Oil Filter .

8 - Bolt

- ❑ Tightening specifications. Refer to ⇒ Servicing – 6-Cylinder TDI Common Rail Engine; Rep. Gr. 17 ; Oil Filter/Oil Pressure Switch; Overview - Oil Filter .

9 - Coolant Temperature Sensor 2 - G802-

- ❑ Removing and installing. Refer to ⇒ “2.11 Coolant Temperature Sensor 2 G802 , Removing and Installing”, page 167 .

10 - O-Rings

- ❑ Installation instructions. Refer to ⇒ Servicing – 6-Cylinder TDI Common Rail Engine; Rep. Gr. 17 ; Oil Filter/Oil Pressure Switch; Overview - Oil Filter .

11 - Seal

- ❑ Installation instructions. Refer to ⇒ Servicing – 6-Cylinder TDI Common Rail Engine; Rep. Gr. 17 ; Oil Filter/Oil Pressure Switch; Overview - Oil Filter .

12 - O-Ring

- ❑ Installation instructions. Refer to ⇒ Servicing – 6-Cylinder TDI Common Rail Engine; Rep. Gr. 17 ; Oil Filter/Oil Pressure Switch; Overview - Oil Filter .

3.2 Oil Pressure Sensor - G10- , Removing and Installing

Removing

– Remove the air filter housing. Refer to ⇒ “3.2 Air Filter Housing, Removing and Installing”, page 229 .

– Free up the fuel hoses -1, 2 and 3- on the right engine cover.

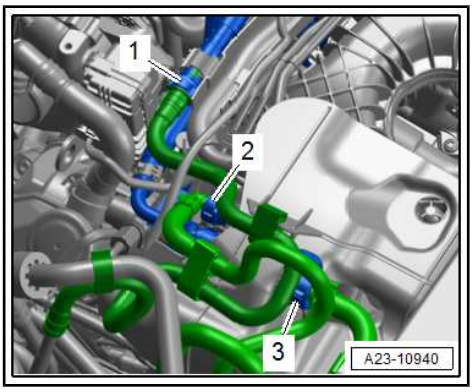

– Remove the right engine cover -1- from the ball pins in the direction of -arrows- and push it slightly to the side.

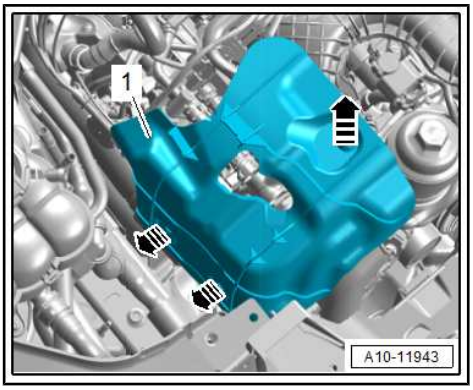

Protected by copyright. Copying for private or commercial purposes, in part or in whole, is not permitted unless authorised by AUDI AG. AUDI AG does not guarantee or accept any liability with respect to the correctness of information in this document. Copyright by AUDI AG.

All additional procedures are described. Refer to ⇒ Servicing – 6-Cylinder TDI Common Rail Engine; Rep. Gr. 17 ; Oil Filter/Oil Pressure Switch; Overview - Oil Filter .

Installing

Additional procedures:

– Install the engine cover. Refer to ⇒ “3.1 Engine Cover, Removing and Installing”, page 77 .

– Install the air filter housing. Refer to ⇒ “3.2 Air Filter Housing, Removing and Installing”, page 229 .

Tightening Specifications

♦ Refer to ⇒ “3.1 Overview - Oil Filter”, page 122

cardiagn.com

3.3 Oil Pressure, Checking

All procedures are described. Refer to ⇒ Servicing – 6-Cylinder TDI Common Rail Engine; Rep. Gr. 17 ; Oil Filter/Oil Pressure Switch; Oil Pressure, Checking .

3.4 Oil Filter Housing, Removing and Installing

Special tools and workshop equipment required

- Hose Clip Pliers - VAS6340-

Removing

– Remove the air filter housing. Refer to ⇒ "3.2 Air Filter Housing, Removing and Installing", page 229 .

– Remove the upper reinforcement brace. Refer to ⇒ Body Exterior; Rep. Gr. 50 ; Lock Carrier; Lock Carrier, Removing and Installing .

– Free up the fuel hoses -1, 2 and 3- on the right engine cover.

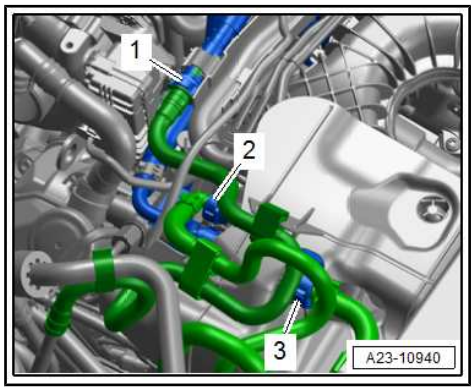

– Remove the right engine cover -1- from the ball pins in direction of -arrows- and push it slightly to the side.

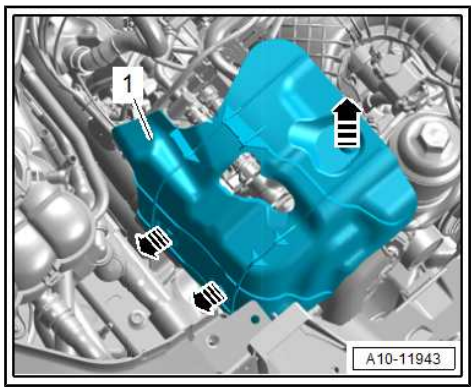

All additional procedures are described. Refer to ⇒ Servicing – 6-Cylinder TDI Common Rail Engine; Rep. Gr. 17 ; Oil Filter/Oil Pressure Switch; Oil Filter Housing, Removing and Installing .

Installing

Additional procedures:

– Install the engine cover. Refer to ⇒ "3.1 Engine Cover, Removing and Installing", page 77 .

– Install the air filter housing. Refer to ⇒ "3.2 Air Filter Housing, Removing and Installing", page 229 .

Tightening Specifications

- Refer to ⇒ Body Exterior; Rep. Gr. 50 ; Lock Carrier; Overview - Lock Carrier .

3.5 Oil Pressure Regulation Valve - N428- , Removing and Installing

Protected by copyright. Copying for private or commercial purposes, in part or in whole, is not permitted unless authorised by AUDI AG. AUDI AG does not guarantee or accept any liability with respect to the correctness of information in this document. Copyright by AUDI AG.

All procedures are described. Refer to ⇒ Servicing – 6-Cylinder TDI Common Rail Engine; Rep. Gr. 17 ; Oil Filter/Oil Pressure Switch; Oil Pressure Regulation Valve - N428- , Removing and Installing .

cardiagn.com

3.6 Oil Temperature Sensor 2 - G664- , Removing and Installing

All procedures are described. Refer to ⇒ Servicing – 6-Cylinder TDI Common Rail Engine; Rep. Gr. 17 ; Oil Filter/Oil Pressure Switch; Oil Temperature Sensor 2 - G664- , Removing and Installing .

Protected by copyright. Copying for private or commercial purposes, in part or in whole, is not permitted unless authorised by AUDI AG. AUDI AG does not guarantee or accept any liability with respect to the correctness of information in this document. Copyright by AUDI AG.

cardiagn.com

4 Special Tools

Special tools and workshop equipment required

- Hose Clip Pliers - VAS6340-

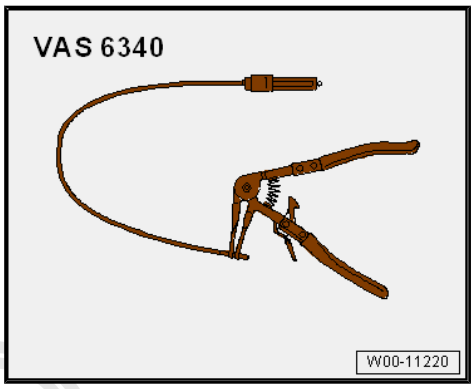

- Vehicle Diagnostic Tester

Protected by copyright. Copying for private or commercial purposes, in part or in whole, is not permitted unless authorised by AUDI AG. AUDI AG does not guarantee or accept any liability with respect to the correctness of information in this document. Copyright by AUDI AG.

cardiagn.com

19 – Cooling System

1 Coolant System/Coolant

⇒ “1.1 Connection Diagram - Coolant Hoses”, page 127

⇒ “1.2 Cooling System, Checking for Leaks”, page 134

⇒ “1.3 Coolant, Draining and Filling”, page 140

1.1 Connection Diagram - Coolant Hoses

⇒ “1.1.1 Connection Diagram - Coolant Hoses, Vehicle without High-Voltage System, without Parking Heater”, page 127

⇒ “1.1.2 Connection Diagram - Coolant Hoses, Vehicle without High-Voltage System, with Parking Heater”, page 129

⇒ “1.1.3 Connection Diagram - Coolant Hoses, Vehicle with High-Voltage System”, page 130

⇒ “1.1.4 Connection Diagram - Coolant Hoses, High-Voltage System Cooling Components”, page 132

1.1.1 Connection Diagram - Coolant Hoses, Vehicle without High-Voltage System, without Parking Heater

- Blue = large coolant circuit.
- Red = small coolant circuit.
- Orange = cylinder block coolant circuit.
- Brown = heating circuit.
- Arrows = coolant flow direction.

Protected by copyright. Copying for private or commercial purposes, in part or in whole, is not permitted unless authorised by AUDI AG. AUDI AG does not guarantee or accept any liability with respect to the correctness of information in this document. Copyright by AUDI AG.

cardiagn.com

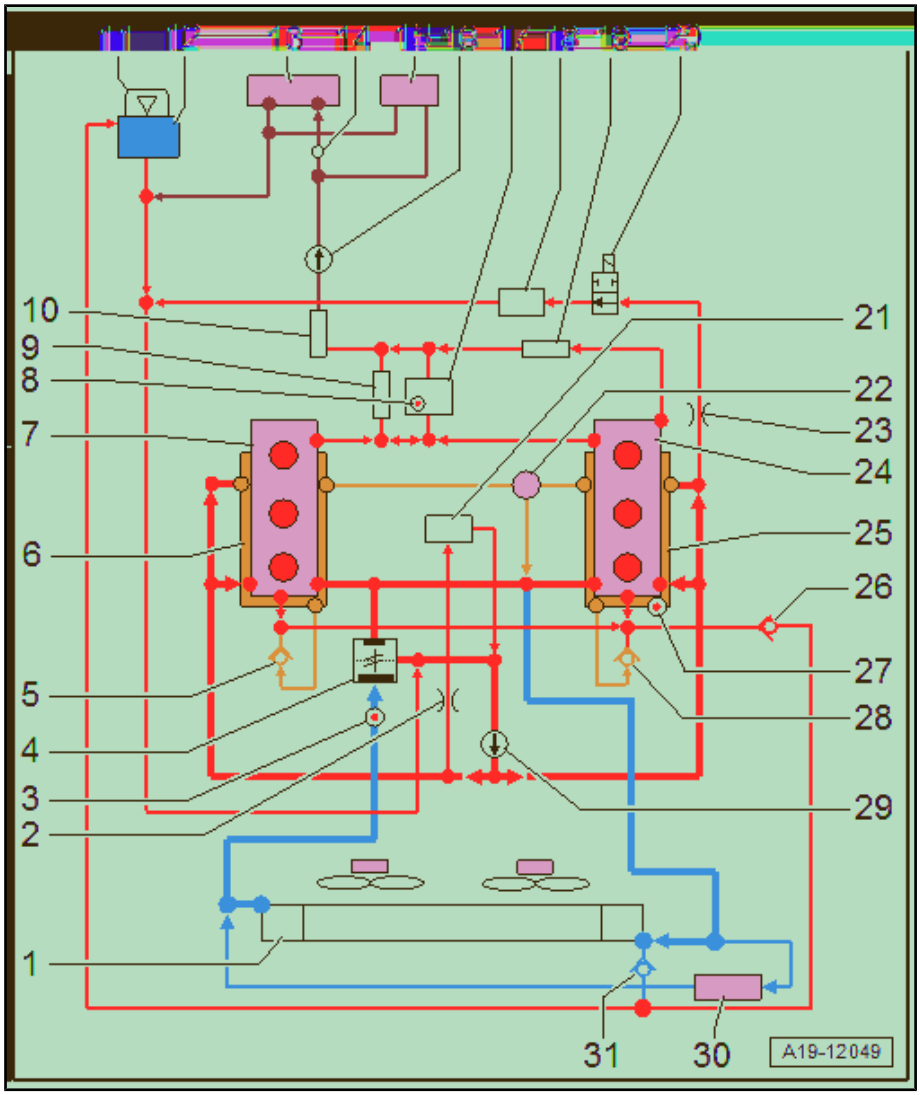

1 - Radiator

2 - Restrictor

3 - Coolant Temperature Sensor 2 - G802-

4 - Map Controlled Engine Cooling Thermostat - F265-

5 - Check Valve

6 - Cylinder Block

- Cylinder Bank 1 (Right)

7 - Cylinder Head

- Cylinder Bank 1 (Right)

8 - Engine Coolant Temperature Sensor - G62-

9 - Auxiliary EGR Cooler

- With coolant shut-off valve
- Equipped on some models

10 - Turbocharger

11 - Cap

- Checking pressure relief valve. Refer to ⇒ Servicing – 6-Cylinder TDI Common Rail Engine; Rep. Gr. 19 ; Cooling System/Coolant; Cooling System, Checking For Leaks .

12 - Coolant Expansion Tank

13 - Front Heater Core for the Heater

14 - Bleed Screw

15 - Rear Heater Core for the Heater

- Equipped on some models

16 - Coolant Recirculation Pump - V50-

17 - EGR Cooler

- With coolant shut-off valve

18 - ATF Cooler

19 - Reducing Agent Injector - N474-

20 - Transmission Fluid Cooling Valve - N509-

21 - Engine Oil Cooler

22 - Coolant Shut-Off Valve

23 - Restrictor

24 - Cylinder Head

- Cylinder Bank 2 (Left):

25 - Cylinder Block

- Cylinder Bank 2 (Left):

cardiagn.com

26 - Check Valve

27 - Engine Temperature Control Sensor - G694-

28 - Check Valve

29 - Coolant Pump

30 - Auxiliary Cooler

- ❑ Equipped on some models

31 - Check Valve

1.1.2 Connection Diagram - Coolant Hoses, Vehicle without High-Voltage System, with Parking Heater

- ♦ Blue = large coolant circuit.
- ♦ Red = small coolant circuit.
- ♦ Orange = cylinder block coolant circuit.
- ♦ Brown = heating circuit.
- ♦ Arrows = coolant flow direction.

1 - Radiator

2 - Restrictor

3 - Coolant Temperature Sensor 2 - G802-

4 - Map Controlled Engine Cooling Thermostat - F265-

5 - Check Valve

6 - Cylinder Block

- ❑ Cylinder Bank 1 (Right)

7 - Parking Heater

- ❑ With Recirculation Pump - V55-

8 - Cylinder Head

- ❑ Cylinder Bank 1 (Right)

9 - Engine Coolant Temperature Sensor - G62-

10 - Auxiliary EGR Cooler

- ❑ With coolant shut-off valve
- ❑ Equipped on some models

11 - Turbocharger

12 - Cap

- ❑ Checking pressure relief valve. Refer to ⇒ Servicing – 6-Cylinder TDI Common Rail Engine; Rep. Gr. 19 ; Cooling System/Coolant; Cooling System, Checking For Leaks .

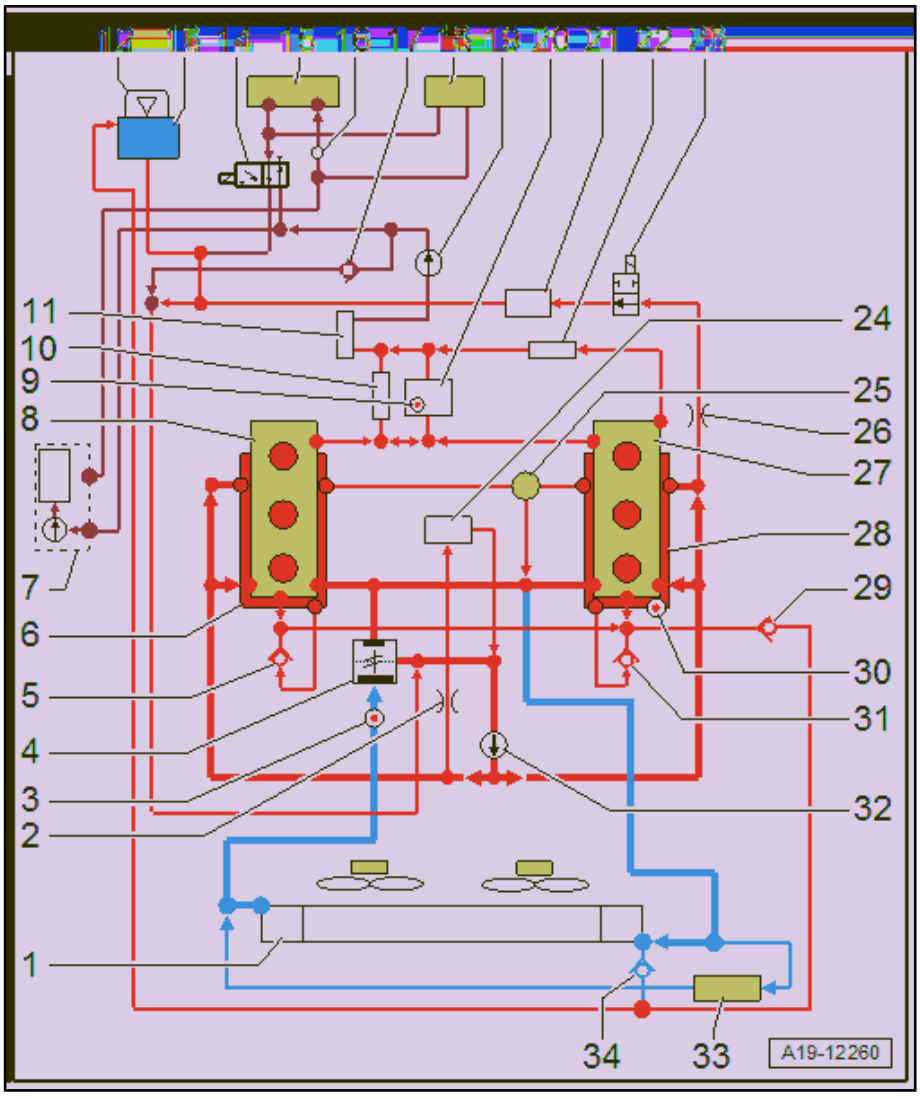

cardiagn.com

13 - Coolant Expansion Tank

14 - Heater Coolant Shut-Off Valve - N279-

15 - Front Heater Core for the Heater

16 - Bleeder Screw

17 - Check Valve

18 - Rear Heater Core for the Heater

- ❑ Equipped on some models

19 - Coolant Recirculation Pump - V50-

20 - EGR Cooler

- ❑ With coolant shut-off valve

21 - ATF Cooler

22 - Reducing Agent Injector - N474-

23 - Transmission Fluid Cooling Valve - N509-

24 - Engine Oil Cooler

25 - Coolant Shut-Off Valve

Protected by copyright. Copying for private or commercial purposes, in part or in whole, is not permitted unless authorised by AUDI AG. AUDI AG does not guarantee or accept any liability with respect to the correctness of information in this document. Copyright by AUDI AG.

26 - Restrictor

27 - Cylinder Head

- ❑ Cylinder Bank 2 (Left):

28 - Cylinder Block

- ❑ Cylinder Bank 2 (Left):

29 - Check Valve

30 - Engine Temperature Control Sensor - G694-

31 - Check Valve

32 - Coolant Pump

33 - Auxiliary Cooler

- ❑ Equipped on some models

34 - Check Valve

1.1.3 Connection Diagram - Coolant Hoses, Vehicle with High-Voltage System

- ♦ Blue = large coolant circuit.
- ♦ Red = small coolant circuit.
- ♦ Orange = cylinder block coolant circuit.
- ♦ Brown = heating circuit.
- ♦ Arrows = coolant flow direction.

cardiagn.com

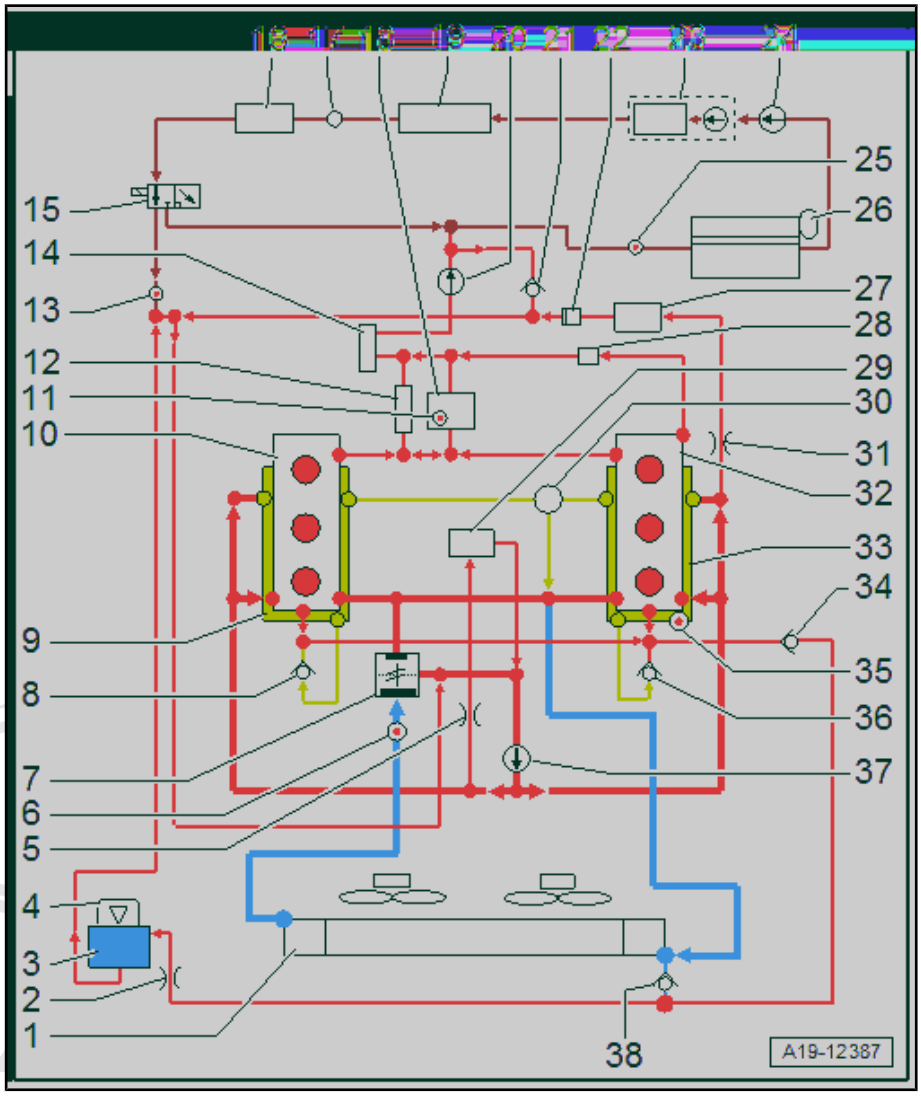

1 - Radiator

2 - Restrictor

3 - Coolant Expansion Tank

4 - Cap

- ❑ Checking pressure relief valve. Refer to ⇒ Servicing – 6-Cylinder TDI Common Rail Engine; Rep. Gr. 19 ; Cooling System/Coolant; Cooling System, Checking For Leaks .

5 - Restrictor

6 - Coolant Temperature Sensor 2 - G802-

7 - Map Controlled Engine Cooling Thermostat - F265-

8 - Check Valve

9 - Cylinder Block

- ❑ Cylinder Bank 1 (Right)

10 - Cylinder Head

- ❑ Cylinder Bank 1 (Right)

11 - Engine Coolant Temperature Sensor - G62-

12 - Auxiliary EGR Cooler

- ❑ With coolant shut-off valve
- ❑ Equipped on some models

13 - Thermal Management Coolant Temperature Sensor 4 - G905-

14 - Turbocharger

15 - Coolant Valve

- ♦ Without parking heater Coolant Change-Over Valve 3 - N634-
- ♦ With parking heater Heater Coolant Shut-Off Valve - N279-

16 - High-Voltage Heater (PTC) - Z115- with High-Voltage Heater (PTC) Control Module - J848-

17 - Bleeder Screw

18 - EGR Cooler

- ❑ With coolant shut-off valve

19 - Heater Core for the Heater

20 - Thermal Management Coolant Pump - V617-

21 - Check Valve

22 - Coolant Thermostat for ATF Coolant Circuit

23 - Parking Heater

- ❑ With Recirculation Pump - V55-
- ❑ Equipped on some models

Protected by copyright. Copying for private or commercial purposes, in part or in whole, is not permitted unless authorised by AUDI AG. AUDI AG does not guarantee or accept any liability with respect to the correctness of information in this document. Copyright by AUDI AG.

cardiagn.com

24 - Thermal Management Coolant Pump 2 - V618-

- ❑ For equipment versions without parking heater

25 - Thermal Management Coolant Temperature Sensor 7 - G908-

26 - Inner Heat Exchanger

- ❑ Coolant side

27 - ATF Cooler

28 - Reducing Agent Injector - N474-

29 - Engine Oil Cooler

30 - Coolant Shut-Off Valve

31 - Restrictor

32 - Cylinder Head

- ❑ Cylinder Bank 2 (Left):

33 - Cylinder Block

- ❑ Cylinder Bank 2 (Left):

34 - Check Valve

35 - Engine Temperature Control Sensor - G694-

36 - Check Valve

37 - Coolant Pump

38 - Check Valve

Content is protected by copyright. Copying for private or commercial purposes, in part or in whole, is not permitted unless authorised by AUDI AG. AUDI AG does not guarantee or accept any liability with respect to the correctness of information in this document. Copyright by AUDI AG.

1.1.4 Connection Diagram - Coolant Hoses, High-Voltage System Cooling Components

- ♦ Blue = coolant circuit Three-Phase Current Drive - VX54- .
- ♦ Red = coolant circuit Hybrid Battery Unit - AX1- .
- ♦ Arrows = coolant flow direction.

cardiagn.com

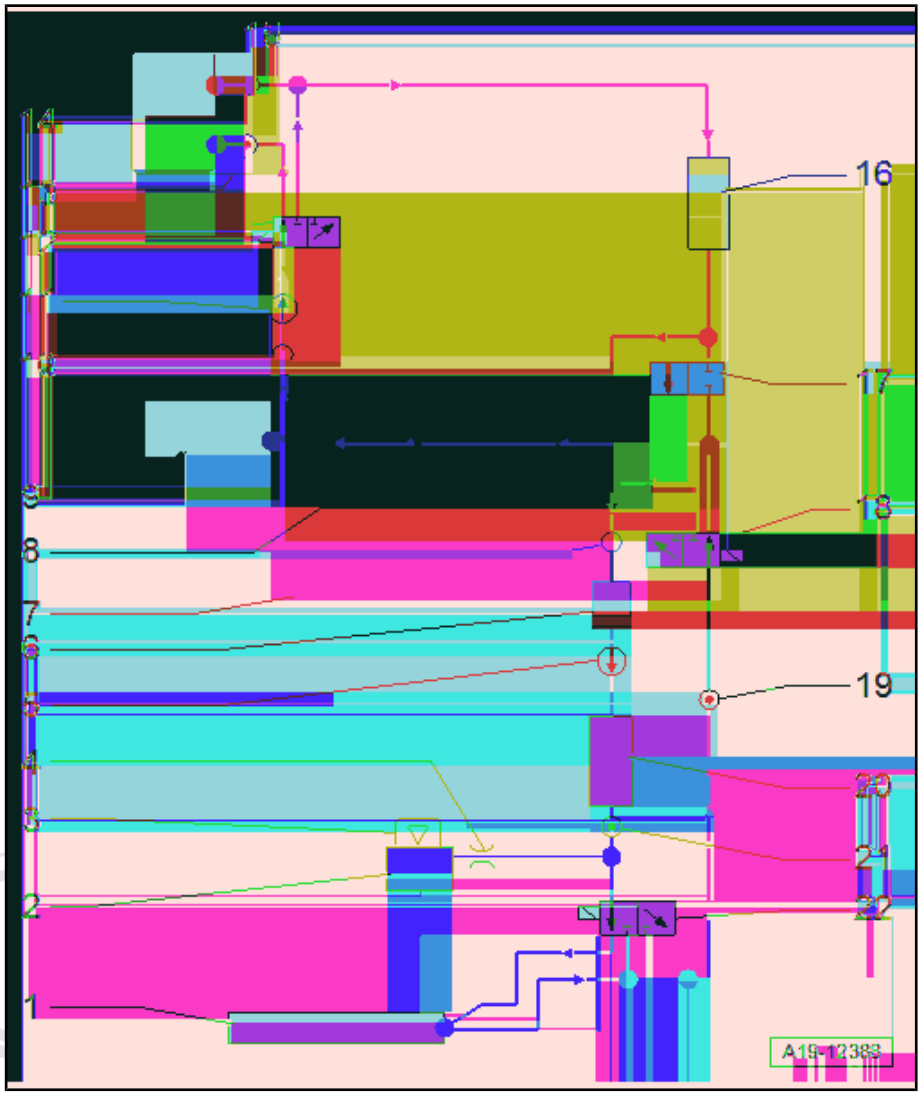

1 - Radiator for High-Voltage System Coolant Circuit

2 - Coolant Expansion Tank

- With Engine Coolant Level Sensor 2 - G837-
- With cap

3 - Cap

- For the coolant reservoir
- Checking pressure relief valve. Refer to ⇒ Servicing – 6-Cylinder TDI Common Rail Engine; Rep. Gr. 19 ; Cooling System/Coolant; Cooling System, Checking For Leaks .

4 - Restrictor

5 - Thermal Management Coolant Pump 4 - V620-

6 - Electric Drive Power and Control Electronics - JX1-

7 - Thermal Management Coolant Temperature Sensor 5 - G906-

8 - Thermal Management Coolant Temperature Sensor 8 - G968-

9 - Hybrid Battery Unit Heat Exchanger

10 - Thermal Management Coolant Temperature Sensor 1 - G902-

11 - High-Voltage Battery Coolant Pump - V590-

12 - Coolant Change-Over Valve 4 - N635-

13 - High-Voltage Battery Coolant Temperature Sensor 1 - G898-

14 - Hybrid Battery Unit - AX1-

15 - High-Voltage Battery Coolant Temperature Sensor 2 - G899-

16 - High-Voltage Battery Charger Control Module - J1050-

17 - Coolant Shut-Off Valve 2 - N645-

18 - Coolant Change-Over Valve 1 - N632-

19 - Thermal Management Coolant Temperature Sensor 6 - G907-

20 - Three-Phase Current Drive - VX54-

- With Electro-Drive Drive Motor - V141-

21 - Thermal Management Coolant Temperature Sensor 3 - G904-

22 - Coolant Change-Over Valve 2 - N633-

cardiagn.com
Audi
This document is copyright. Copying for private or commercial purposes, in part or in whole, is not permitted unless authorised by AUDI AG. AUDI AG does not guarantee or accept any liability with respect to the correctness of information in this document. Copyright by AUDI AG.

1.2 Cooling System, Checking for Leaks

⇒ "1.2.1 Cooling System, Checking for Leaks, Engine Coolant Circuit", page 134

⇒ "1.2.2 Cooling System, Checking for Leaks, High-Voltage System Coolant Circuit", page 134

1.2.1 Cooling System, Checking for Leaks, Engine Coolant Circuit

All procedures are described. Refer to ⇒ Servicing – 6-Cylinder TDI Common Rail Engine; Rep. Gr. 19 ; Cooling System/Coolant; Cooling System, Checking For Leaks .

1.2.2 Cooling System, Checking for Leaks, High-Voltage System Coolant Circuit

Special tools and workshop equipment required

- Hose Clamps - Up To 25mm - 3094-
- Cooling System Tester - VAG1274B-
- Turbocharger Tester Kit - VAG1397A-
- Shop Crane - Drip Tray - VAS6208-
- Hose Clip Pliers - VAS6340-
- Cooling System Tester for High Voltage Batteries - VAS691005-
- Cooling System Tester - Directional Valve - VAS691005/1-
- Cooling System Tester for High Voltage Batteries - Plug - VAS691005/2-

cardiagn.com

Protected by copyright. Copying for private or commercial purposes, in part or in whole, is not permitted unless authorised by AUDI AG. AUDI AG does not guarantee or accept any liability with respect to the correctness of information in this document. Copyright by AUDI AG.

-VAS691005- Self-Test, Performing

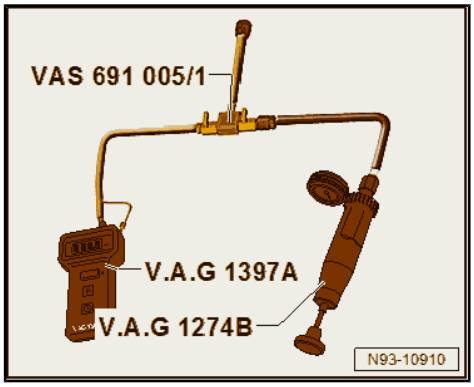

Before checking the -VAS691005/1- for leaks, clean as follows:

– Attach the cleaning nozzle to the connection “A” for the -VAG1397A- .

– Attach the pressure hose to the connection “C” on the -VAS691005/1- .

– Open the shut-off valves “A” and “C” on the -VAS691005/1- .

– Clean the -VAS691005/1- with compressed air.

– Remove the cleaning nozzle from the connection “A” on the -VAS691005/1- .

– Connect the connection “A” on the -VAS691005/1- to the connection “II” on the -VAG1397A- .

– Connect the -VAG1274B- to the connection “C” on the -VAS691005/1- .

– Open the shut-off valves “A” and “C” on the -VAS691005/1- .

– Switch on the -VAG1397A- and select setting “II”.

– Create pressure using the -VAG1274B- until approximately 2.5 bar (36.25 psi) appears on the -VAG1397A-

– Check the loss of pressure on the -VAG1397A- after approximately one minute of wait time (settling).

If no loss of pressure is detected on the -VAG1397A- then the -VAS691005- is OK.

Test Requirements

- The coolant temperature in the cooling system for the high-voltage system must be at room temperature; if necessary let the vehicle “acclimate” in the workshop for 60 minutes.
- A -VAS691005- self-test was performed, must be ok. Refer to ⇒ page 135 .

Test Sequence

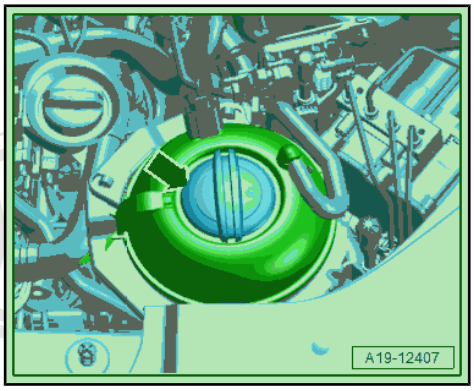

– Open the coolant expansion tank cap -arrow-.

– Check the coolant level in the coolant expansion tank.

– If there is no coolant present in the coolant expansion tank, then check for leaks in the High-Voltage Battery 1 - AX2- . Refer to ⇒ page 137 .

– If there is a residual amount of coolant present in the coolant expansion tank, then fill coolant up to the “max” mark.

Protected by copyright. Copying for private or commercial purposes, in part or in whole, is not permitted unless authorised by AUDI AG. AUDI AG does not guarantee or accept any liability with respect to the correctness of information in this document. Copyright by AUDI AG.

cardiagn.com

– Clean the -VAS691005/1- :

• Connection “A” on the connection “II” on the -VAG1397A- .

• Connection “B” on the -VAS691005/5- on the coolant expansion tank -1-.

• Connection “C” on the -VAG1274B- .

– Open the shut-off valves “A” and “C” on the -VAS691005/1- .

– Switch on the -VAG1397A- and select setting “II”.

– Create pressure using the -VAG1274B- until approximately 2 bar (29 psi) appears on the -VAG1397A-

– Connect the shut-off valve “C” to the -VAS691005/1- .

– Note the value displayed on the -VAG1397A- .

– Check the pressure decrease on the -VAG1397A- after a 10 minute wait time (settling).

• The loss of pressure may only be a maximum of 0.1 bar (1.45 psi).

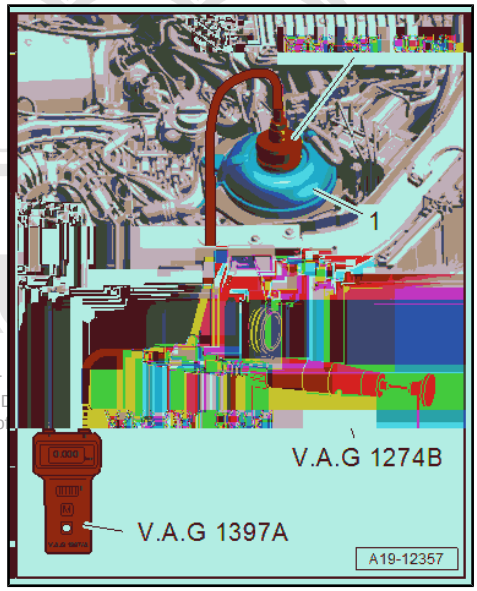

Protected by copyright. Copying for permitted unless authorised by AUDI with respect to the correctness of

If the Loss of Pressure Is over 0.1 Bar (1.45 Psi) (Leak Is Suspected):

– Switch the ignition on.

– Check the indicator lamps in the instrument cluster.

– If the “coolant quantity” and an “error in the high-voltage battery” is not displayed, check for leaks in the high-voltage battery. Refer to ⇒ page 137 .

If the Loss of Pressure is under 0.1 Bar (1.45 psi):

– Note the current value displayed on the -VAG1397A- .

– Check the pressure decrease on the -VAG1397A- after an additional 10 minute wait time.

• The loss of pressure now may only be a maximum of 0.01 bar (1.45 psi).

If the Loss of Pressure is Over 0.01 Bar (1.45 psi) (Leak is Suspected):

– Connect the shut-off valve “A” to the -VAS691005/1- .

– Disconnect the -VAG1397A- and -VAG1274B- from -VAS691005/1- .

– To reduce the pressure, slowly open the shut-off valve “C” on the -VAS691005/1- and catch any leaking coolant using a suitable container.

– Disconnect the -VAS691005/1- from the -VAS691005/5- on the coolant expansion tank -1-.

– Remove the -VAS691005/5- from the coolant expansion tank.

– Check the Hybrid Battery Unit - AX1- for leaks. Refer to ⇒ page 137 .

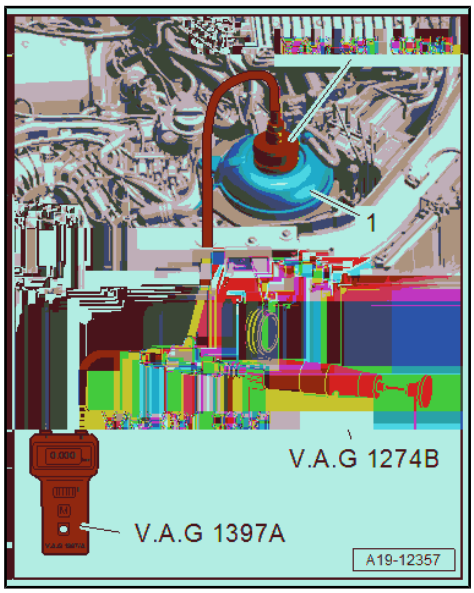

cardiagn.com

If the Loss of Pressure is under 0.01 Bar (1.45 psi) (Cooling System is OK):

- Connect the shut-off valve “A” to the -VAS691005/1- .
- Disconnect the -VAG1397A- and -VAG1274B- from -VAS691005/1- .
- To reduce the pressure, slowly open the shut-off valve “C” on the -VAS691005/1- and catch any leaking coolant on the -VAS691005/1- using a suitable container.
- Disconnect the -VAS691005/1- from the -VAS691005/5- on the coolant expansion tank -1-.
- Remove the -VAS691005/5- from the coolant expansion tank.
- Close the coolant expansion tank cap.

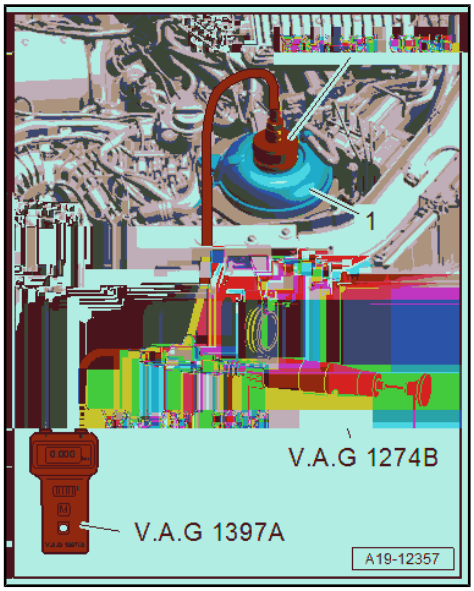

Check the Hybrid Battery Unit - AX1- for Leaks.

- Remove the luggage compartment floor. Refer to ⇒ Body Interior; Rep. Gr. 70 ; Luggage Compartment Trim Panels; Luggage Compartment Floor, Removing and Installing .
- Remove the luggage compartment floor. Refer to ⇒ Body Interior; Rep. Gr. 70 ; Luggage Compartment Trim Panels; Luggage Compartment Floor Trim Panel, Removing and Installing .
- Perform a visual inspection of the high-voltage battery. Refer to ⇒ “3.2 Hybrid Battery Unit AX1 , Visual Inspection”, page 311 .
- Clamp off the coolant hoses -1 and 2- to the high-voltage battery under the underbody using the -3094- .

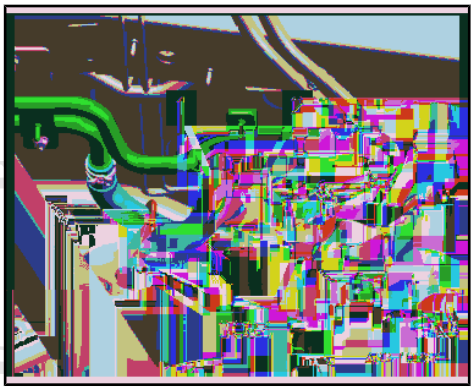

- Clamp off the coolant hoses -1 and 2- to the high-voltage battery in the vehicle interior using the -3094- .

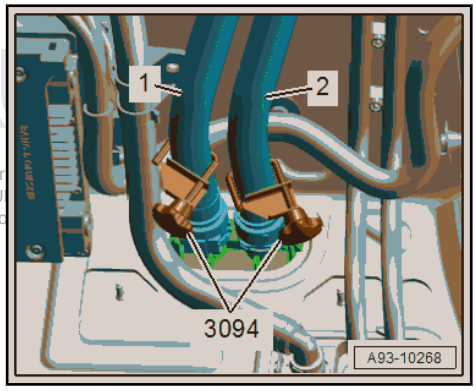

Protected by copyright. Copying for
permitted unless authorised by AU
with respect to the correctness o

cardiagn.com

– Catch escaping coolant with a cloth.
– Remove the coolant hoses -1 and 2- to the high-voltage battery from the body guide under the underbody, to do so remove the hose clamps.

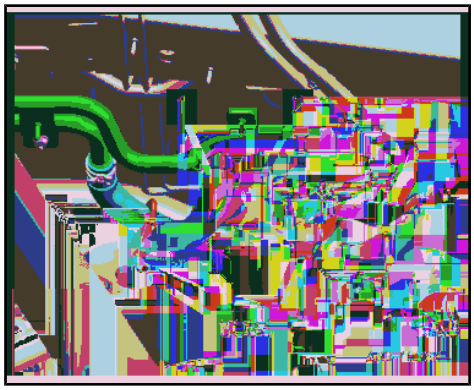

– To prevent escaping coolant from flowing on the carpet, the cover the area under the coolant hoses with absorbent paper towels.
– Release and remove the coolant hoses -1 and 2- in the vehicle interior.

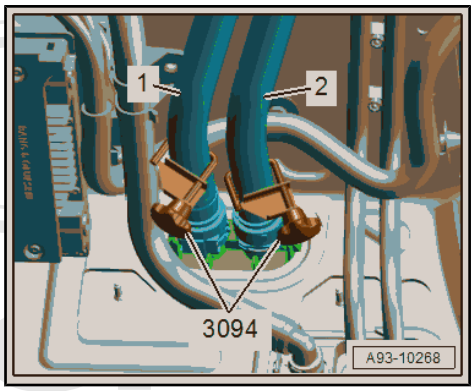

– Place a container under both coolant hoses.
– Remove the -3094- and drain the remaining coolant in the container.
– Push the connecting piece -1- on the coolant connection on the Hybrid Battery Unit - AX1- and it click it into place.
– Connect the -VAG1274B- to the connecting piece -1-.
– Place the two coolant hoses in the container.
– Using the -VAG1274B- , carefully push the coolant through the connection -1- out of the Hybrid Battery Unit - AX1- .
– Disconnect the -VAG1274B- from the connecting piece -1-.
– Seal one of the coolant connections on the Hybrid Battery Unit - AX1- using the -VAS691005/2- .

Protected by copyright. Copying for private or comm
permitted unless authorised by AUDI AG. AUDI AG
with respect to the correctness of information in t
cardiagn.com

– Clean the -VAS691005/1- :

• Connection “A” on the connection “II” on the -VAG1397A- .

• Connection “B” on the connecting piece -1- on the Hybrid Battery Unit - AX1- .

• Connection “C” on the -VAG1274B- .

– Open the shut-off valves “A” and “C” on the -VAS691005/1- .

– Switch on the -VAG1397A- and select setting “II”.

– Create pressure using the -VAG1274B- until approximately 2.0 bar (29 psi) appears on the -VAG1397A-

– Connect the shut-off valve “C” to the -VAS691005/1- .

– Note the value displayed on the -VAG1397A- after one minute wait time (settling).

– Check the pressure decrease on the -VAG1397A- after a 10 minute wait time.

• The loss of pressure may only be a maximum of 0.01 bar (1.45 psi).

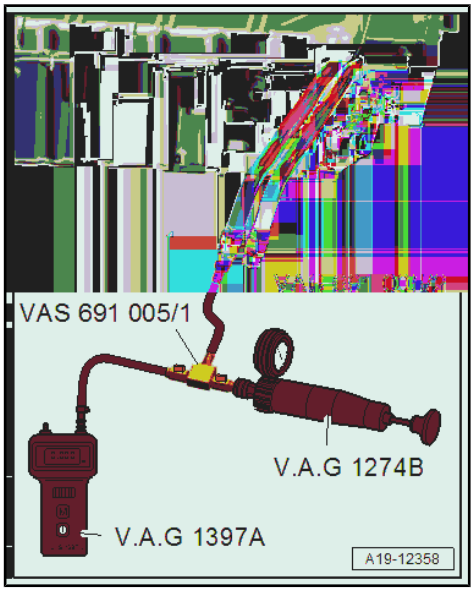

If the Loss of Pressure is Over 0.01 Bar (1.45 psi) (Leak in the Hybrid Battery Unit - AX1-):

– Connect the shut-off valve “A” to the -VAS691005/1- .

– Disconnect the -VAG1397A- and -VAG1274B- from -VAS691005/1- .

– To reduce the pressure, slowly open the shut-off valve “C” on the -VAS691005/1- and catch any leaking coolant on the -VAS691005/1- using a suitable container.

– Disconnect the -VAS691005/1- from the connecting piece -1- on the Hybrid Battery Unit - AX1- .

– Remove the connecting piece -1- and -VAS691005/2- from the coolant hoses.

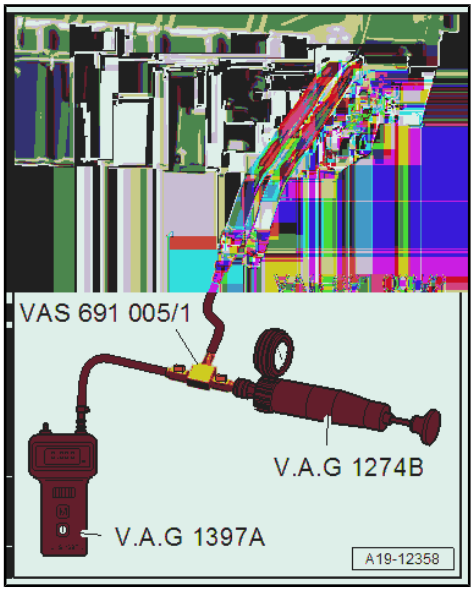

cardiagn.com

Protected by copyright. Copying for private or commercial purposes, in part or in whole, is not permitted unless authorised by AUDI AG. AUDI AG does not guarantee or accept any liability with respect to the correctness of information in this document. Copyright by AUDI AG.

If the Loss of Pressure Is Lower than 0.01 Bar (1.45 Psi) (Leak in the Vehicle Cooling System for the High-Voltage System):

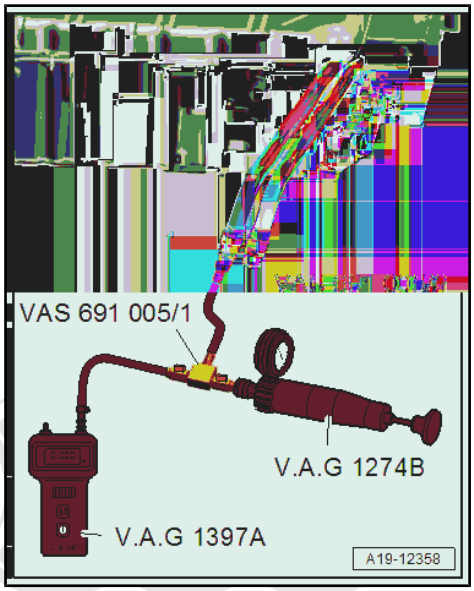

- Connect the shut-off valve “A” to the -VAS691005/1- .
- Disconnect the -VAG1397A- and -VAG1274B- from -VAS691005/1- .
- To reduce the pressure, slowly open the shut-off valve “C” on the -VAS691005/1- and catch any leaking coolant on the -VAS691005/1- using a suitable container.
- Disconnect the -VAS691005/1- from the connecting piece -1- on the Hybrid Battery Unit - AX1- .
- Remove the connecting piece -1- and -VAS691005/2- from the coolant hoses.
- Search for leaks in the vehicle cooling system for the high-voltage system and repair any faults.
- Remove the -3094- from the coolant hoses.
- Fill with coolant. Refer to ⇒ “1.3.2 Coolant, Draining and Filling, Vehicle with High-Voltage System, Engine Coolant Circuit”, page 143 .

1.3 Coolant, Draining and Filling

⇒ “1.3.1 Coolant, Draining and Filling, Vehicle without High-Voltage System, Engine Coolant Circuit”, page 140

⇒ “1.3.2 Coolant, Draining and Filling, Vehicle with High-Voltage System, Engine Coolant Circuit”, page 143

⇒ “1.3.3 Coolant, Draining and Filling, Vehicle with High-Voltage System, High-Voltage System Coolant Circuit”, page 146

⇒ “1.3.4 Coolant, Filling and Bleeding Coolant System, Vehicle with High-Voltage System, High-Voltage System Coolant Circuit”, page 148

1.3.1 Coolant, Draining and Filling, Vehicle without High-Voltage System, Engine Coolant Circuit

Special tools and workshop equipment required

- Coolant Collection System - VAS5014- or Shop Crane - Drip Tray - VAS6208-
- Protective Eyewear
- Safety Gloves

Protected by copyright. Copying for private or commercial purposes, in part or in whole, is not permitted unless authorised by AUDI AG. AUDI AG does not guarantee or accept any liability with respect to the correctness of information in this document. Copyright by AUDI AG.

cardiagn.com

Coolant, Draining

⚠ CAUTION

The cooling system is under pressure when the engine is warm. Risk of scalding due to hot steam and hot coolant.

Scalding the skin and other parts of the body is possible.

- **Wear safety gloves.**
- **Wear protective eyewear.**
- **Reduce the pressure by covering the coolant expansion tank cap with a cloth and carefully opening it.**

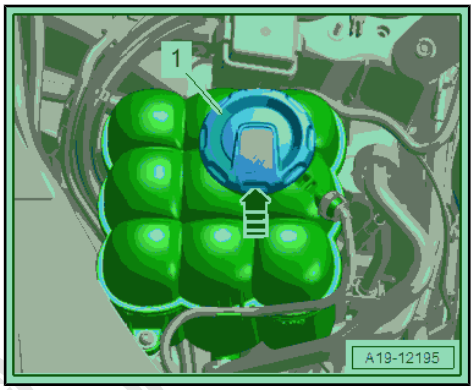

– Open the coolant expansion tank cap -1- by releasing the catch in direction of -arrow-.

– Remove the noise insulation. Refer to ⇒ Body Exterior; Rep. Gr. 66 ; Noise Insulation; Noise Insulation, Removing and Installing .

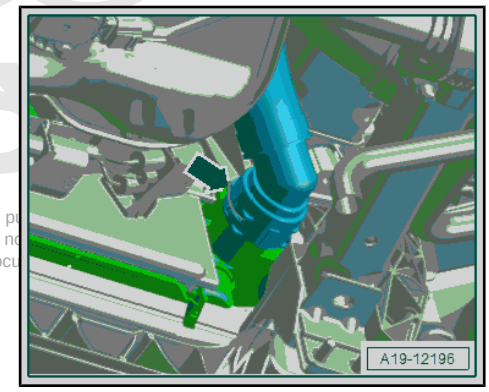

– Place the container of the -VAS5014- or the -VAS6208- underneath.

– Lift the clamp -arrow- and remove the coolant hose from the radiator and drain the coolant.

Protected by copyright. Copying for private or commercial pu
permitted unless authorised by AUDI AG. AUDI AG does no
with respect to the correctness of information in this docu

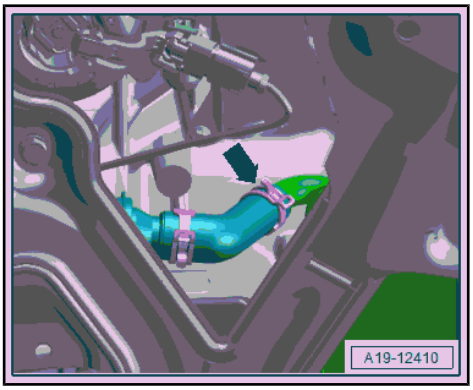

– Open the hose clamp -arrow-.

– Remove the coolant hose from the ATF cooler and let the coolant drain.

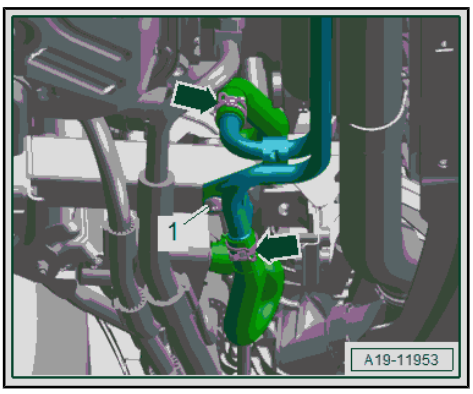

– Vehicles with high-voltage system: Loosen the hose clamps -arrows-, remove the coolant hoses and let the coolant drain.

– Reattach the coolant hoses. Refer to ⇒ Fig. ""Connect the Coolant Hose to the Connector Coupling"" , page 189 for versions with a connector coupling.

Mix and Fill with Coolant

– Mix and fill with coolant. Refer to ⇒ Servicing – 6-Cylinder TDI Common Rail Engine; Rep. Gr. 19 ; Cooling System/Coolant; Coolant, Draining and Filling .

cardiagn.com

Bleed Cooling System

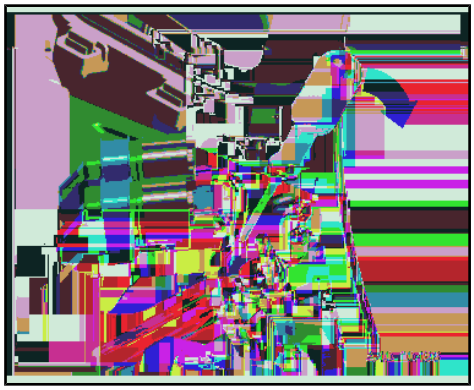

– Remove the plenum chamber cover. Refer to ⇒ Body Exterior; Rep. Gr. 50 ; Bulkhead; Plenum Chamber Cover, Removing and Installing .

– Release the catches with a screwdriver in the direction of -arrow- and remove the bracket -1- for the relay and control module and set aside.

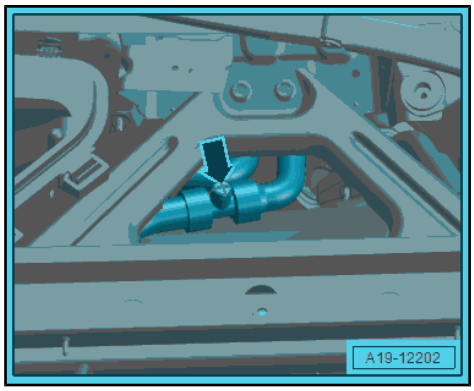

– Open the bleeder screw -arrow- on the coolant hose until the coolant starts to come out.

– Close the bleeder screw.

– If the vehicle has a parking/auxiliary heater, switch it on for about 30 seconds.

– Tighten the cap on the coolant expansion tank until it locks into place.

– Start the engine.

Duration	Engine Speed	Conditions
Three minutes	2000 RPM	• A/C system “OFF”, the LED in the AC button does not turn on • Heater on “HI”, blower speed as low as possible (= 0)
Until both large coolant hoses on the radiator are warm	Idle	• A/C system “OFF” • Heater “HI”
2 Minutes	2000 RPM	• A/C system “OFF” • Heater “HI”

cted by copyright. Copying for private or commercial purposes, in part or in whole, is not permitted unless authorised by AUDI AG. AUDI AG does not guarantee or accept any liability with respect to the correctness of information in this document. Copyright © 2015 AUDI AG

– Turn off engine and allow it to cool off.

– Install the plenum chamber cover. Refer to ⇒ Body Exterior; Rep. Gr. 50 ; Bulkhead; Plenum Chamber Cover, Removing and Installing .

Coolant Level, Checking

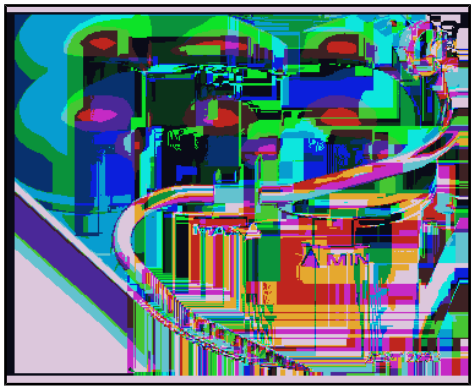

- Coolant level must be at -MAX- marking when the engine is engine cold.
- Coolant level may be above -MAX- marking with engine at operating temperature.

Tightening Specifications

♦ Refer to ⇒ Body Exterior; Rep. Gr. 66 ; Noise Insulation; Overview - Noise Insulation .

cardiagn.com

1.3.2 Coolant, Draining and Filling, Vehicle with High-Voltage System, Engine Coolant Circuit

Special tools and workshop equipment required

- Vehicle Diagnostic Tester
- Coolant Collection System - VAS5014- or Shop Crane - Drip Tray - VAS6208-
- Protective Eyewear
- Safety Gloves

Draining the Coolant, Engine Coolant Circuit

CAUTION

The cooling system is under pressure when the engine is warm. Risk of scalding due to hot steam and hot coolant.

Scalding the skin and other parts of the body is possible.

- **Wear safety gloves.**
- **Wear protective eyewear.**
- **Reduce the pressure by covering the coolant expansion tank cap with a cloth and carefully opening it.**

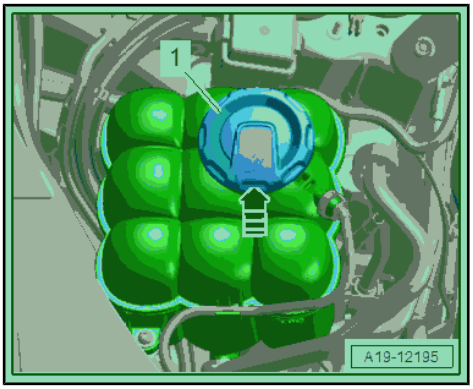

– Open the coolant expansion tank cap -1- by releasing the catch in the direction of -arrow-.

– Remove the noise insulation. Refer to ⇒ Body Exterior; Rep. Gr. 66 ; Noise Insulation; Noise Insulation, Removing and Installing .

– Place the container of the -VAS5014- or the -VAS6208- underneath.

CAUTION

There is a risk of injury if the radiator fan turns on by itself.

- **When performing procedures near the radiator maintain a distance to the radiator.**

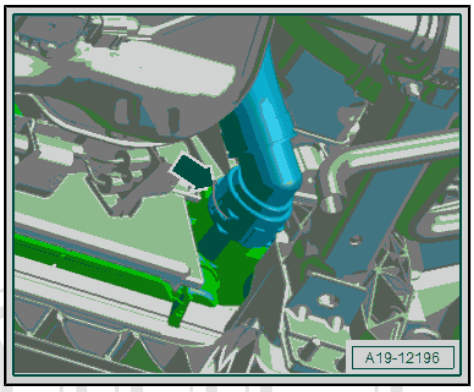

– Lift the clamp -arrow- and remove the coolant hose from the radiator and drain the coolant.

– Open the hose clamp -arrow-.

– Remove the coolant hose from the ATF cooler and let the coolant drain.

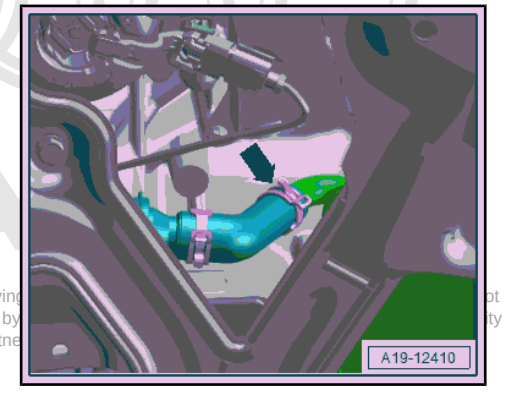

Protected by copyright. Copying permitted unless authorised by with respect to the correctne
cardiagn.com

– Vehicles with high-voltage system: Loosen the hose clamps -arrows-, remove the coolant hoses and let the coolant drain.
– Reattach the coolant hoses. Refer to ⇒ Fig. ""Connect the Coolant Hose to the Connector Coupling"" , page 189 for versions with a connector coupling.

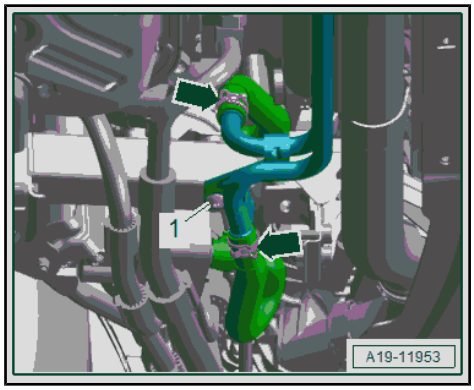

Draining the Coolant, High-Voltage Coolant Circuit

CAUTION

The cooling system is under pressure when the engine is warm. Risk of scalding due to hot steam and hot coolant.

Scalding the skin and other parts of the body is possible.

- **Wear safety gloves.**
- **Wear protective eyewear.**
- **Reduce the pressure by covering the coolant expansion tank cap with a cloth and carefully opening it.**

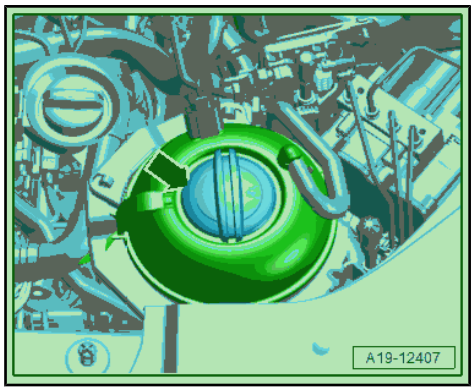

– Open the coolant reservoir cap -arrow-.
– Remove the noise insulation. Refer to ⇒ Body Exterior; Rep. Gr. 66 ; Noise Insulation; Noise Insulation, Removing and Installing .

– Place the -VAS5014- or -VAS6208- under the coolant hoses to the high-voltage battery under the underbody.
– Loosen the hose clamps -arrows- remove and let the coolant drain out.

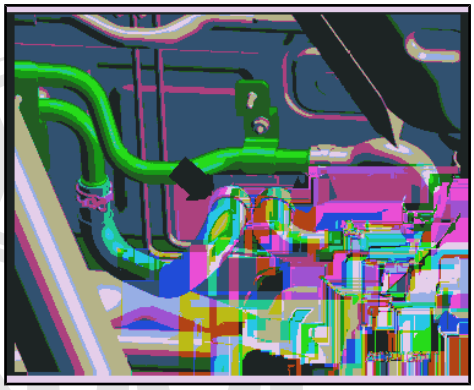

– Place the -VAS5014- or -VAS6208- under the High-Voltage Battery Coolant Pump - V590- to the left under the engine compartment.
– Loosen the hose clamp -arrow-, remove the coolant hose and let the coolant drain out.
– Reconnect all the coolant hoses.

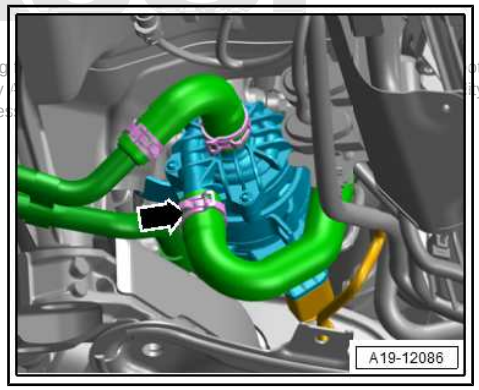

Mix and Fill with Coolant

– Mix and fill with coolant. Refer to ⇒ Servicing – 6-Cylinder TDI Common Rail Engine; Rep. Gr. 19 ; Cooling System/Coolant; Coolant, Draining and Filling .
– Prepare an additional four liters (4.2 quarts) of mixed coolant for the high-voltage coolant circuit.

Protected by copyright. Copying ... permitted unless authorised by ... with respect to the correctness ...
cardiagn.com

Bleed Cooling System

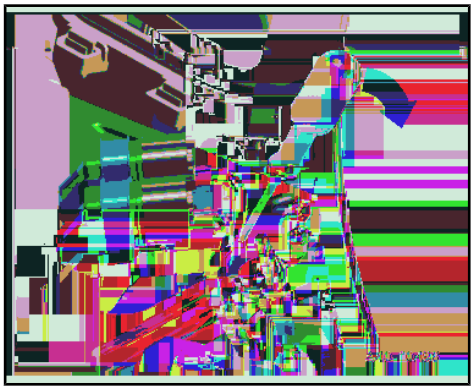

– Remove the plenum chamber cover. Refer to ⇒ Body Exterior; Rep. Gr. 50 ; Bulkhead; Plenum Chamber Cover, Removing and Installing .

– Release the catches with a screwdriver in the direction of -arrow- and remove the bracket -1- for the relay and control module and set aside.

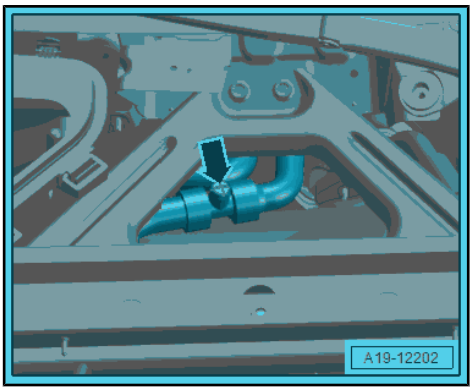

– Open the bleeder screw -arrow- on the coolant hose until the coolant starts to come out.

– Close the bleeder screw.

– If the vehicle has a parking/auxiliary heater, switch it on for about 30 seconds.

– Tighten the cap on the coolant expansion tank until it locks into place.

Note

Before starting the bleeding procedure, ensure that both coolant circuits (engine coolant circuit / high-voltage system coolant circuit) are filled with coolant.

– Connect the Vehicle Diagnostic Tester .

– Switch the ignition on.

– Select and start the `Diagnostic` operating mode.

– Select the `Test plan` tab.

– Select the `Select individual test` button and select the following tree structure consecutively:

- Body
- Heating, Ventilation and Air Conditioning
- 01 - OBD-capable systems
- C5 - Thermal Management Control Module J1024
- C5 - Thermal Management Control Module Functions
- C5 - Basic setting
- C5 - Bleeding the coolant circuit

– Start the selected program and follow the instructions on the Vehicle Diagnostic Tester display.

– Install the plenum chamber cover. Refer to ⇒ Body Exterior; Rep. Gr. 50 ; Bulkhead; Plenum Chamber Cover, Removing and Installing .

Protected by copyright. Copying for private or commercial purposes, in part or in whole, is not permitted unless authorised by AUDI AG. AUDI AG does not guarantee or accept any liability with respect to the correctness of information in this document. Copyright by AUDI AG.

cardiagn.com

Coolant Level, Checking

Engine Coolant Circuit

- Coolant level must be at -MAX- marking when the engine is engine cold.
- Coolant level may be above -MAX- marking with engine at operating temperature.

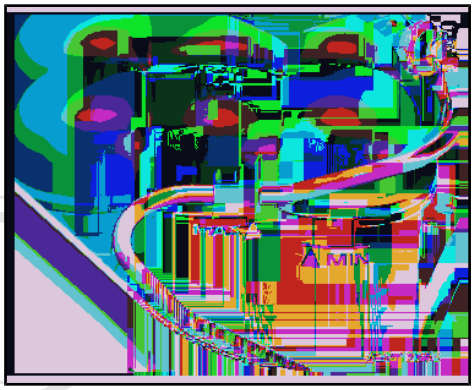

High-Voltage Coolant Circuit

- The coolant level must be up to the upper marking -arrow- when the engine is cold.
- The coolant level may be above the upper marking when the engine is at operating temperature.

Tightening Specifications

rotected by copyright. Copying for private or commercial purposes, permitted unless authorised by AUDI AG. AUDI AG does not guaran document. Co

♦ Refer to ⇒ Body Exterior; Rep. Gr. 66 ; Noise Insulation; Overview - Noise Insulation .

1.3.3 Coolant, Draining and Filling, Vehicle with High-Voltage System, High-Voltage System Coolant Circuit

Special tools and workshop equipment required

♦ Vehicle Diagnostic Tester

♦ Coolant Collection System - VAS5014- or Shop Crane - Drip Tray - VAS6208-

♦ Protective Eyewear

♦ Safety Gloves

⚠ CAUTION

The cooling system is under pressure when the engine is warm. Risk of scalding due to hot steam and hot coolant.

Scalding the skin and other parts of the body is possible.

– Wear safety gloves.

– Wear protective eyewear.

– Reduce the pressure by covering the coolant expansion tank cap with a cloth and carefully opening it.

cardiagn.com

– Open the coolant reservoir cap -arrow-.

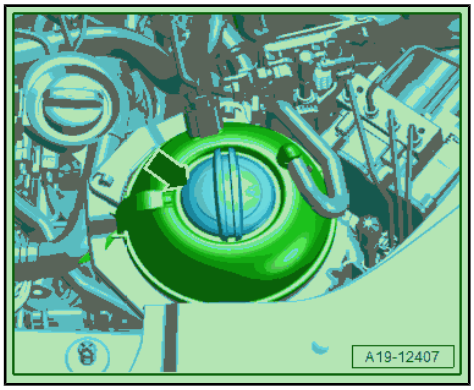

– Remove the noise insulation. Refer to ⇒ Body Exterior; Rep. Gr. 66 ; Noise Insulation; Noise Insulation, Removing and Installing .

– Place the -VAS5014- or -VAS6208- under the coolant hoses to the high-voltage battery under the underbody.

– Loosen the hose clamps -arrows- remove and let the coolant drain out.

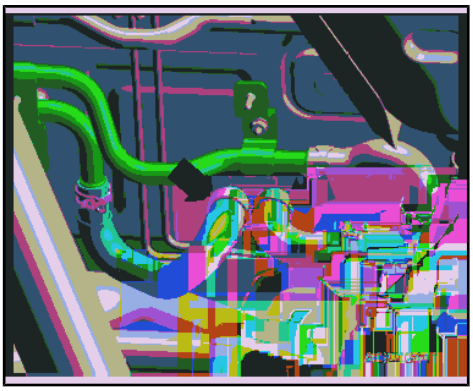

– Place the -VAS5014- or -VAS6208- under the High-Voltage Battery Coolant Pump - V590- to the left under the engine compartment.

Protected by copyright. Copying for private or commercial purposes, in part or in whole, is not permitted unless authorised by AUDI AG. AUDI AG does not guarantee or accept any liability with respect to the correctness of information in this document. Copyright by AUDI AG.

cardiagn.com

– Loosen the hose clamp -arrow-, remove the coolant hose and let the coolant drain out.

– Clean out the entire cooling circuit with compressed air.

– Reconnect all the coolant hoses.

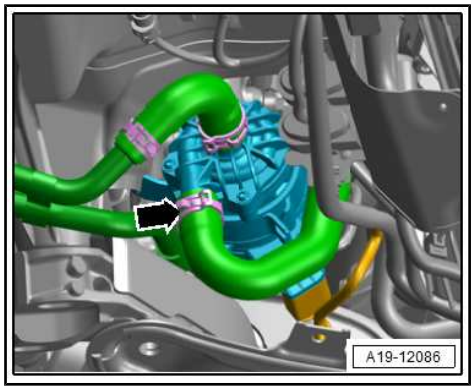

Mix and fill with Coolant

– Mix and fill with coolant. Refer to ⇒ Servicing – 6-Cylinder TDI Common Rail Engine; Rep. Gr. 19 ; Cooling System/Coolant; Coolant, Draining and Filling .

Bleed Cooling System

– Tighten the cap on the coolant expansion tank until it locks into place.

Note

Before starting the bleeding procedure, ensure that both coolant circuits (engine coolant circuit / high-voltage system coolant circuit) are filled with coolant.

– Connect the Vehicle Diagnostic Tester .

– Switch the ignition on.

– Select and start the `Diagnostic` operating mode.

– Select the `Test plan` tab.

– Select the `Select individual test` button and select the following tree structure consecutively:

- Body
- Heating, Ventilation and Air Conditioning
- 01 - OBD-capable systems
- C5 - Thermal Management Control Module J1024
- C5 - Thermal Management Control Module Functions
- C5 - Basic setting
- C5 - Bleeding the coolant circuit

– Start the selected program and follow the instructions on the Vehicle Diagnostic Tester display.

Protected by copyright. Copying for private or commercial purposes, in part or in whole, is not permitted unless authorised by AUDI AG. AUDI AG does not guarantee or accept any liability with respect to the correctness of information in this document. Copyright by AUDI AG.

Coolant Level, Checking

- The coolant level must be up to the upper marking -arrow- when the engine is cold.
- The coolant level may be above the upper marking when the engine is at operating temperature.

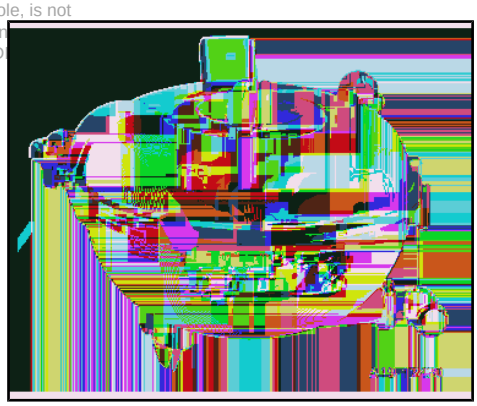

Tightening Specifications

- Refer to ⇒ Body Exterior; Rep. Gr. 66 ; Noise Insulation; Overview - Noise Insulation .

1.3.4 Coolant, Filling and Bleeding Coolant System, Vehicle with High-Voltage Sys-

cardiagn.com

tem, High-Voltage System Coolant Circuit

Special tools and workshop equipment required

- Vehicle Diagnostic Tester
- Protective Eyewear
- Safety Gloves

Bleed Cooling System

CAUTION

The cooling system is under pressure when the engine is warm. Risk of scalding due to hot steam and hot coolant.

Scalding the skin and other parts of the body is possible.

- **Wear safety gloves.**
- **Wear protective eyewear.**
- **Reduce the pressure by covering the coolant expansion tank cap with a cloth and carefully opening it.**

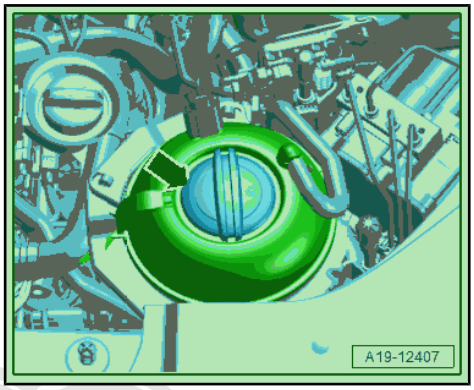

- Add coolant.
- Connect the Vehicle Diagnostic Tester .
- Switch the ignition on.
- Select and start the `Diagnostic` operating mode.
- Select the `Test plan` tab.
- Select the `Select individual test` button and select the following tree structure consecutively:

- Body
- Heating, Ventilation and Air Conditioning
- 01 - OBD-capable systems
- C5 - Thermal Management Control Module J1024
- C5 - Thermal Management Control Module Functions
- C5 - Basic setting
- C5 - Bleeding the coolant circuit

- Start the selected program and follow the instructions on the Vehicle Diagnostic Tester display.

Coolant Level, Checking

- Check the coolant level and fill with coolant.

Protected by copyright. Copying for private or commercial purposes, in part or in whole, is not permitted unless authorised by AUDI AG. AUDI AG does not guarantee or accept any liability with respect to the correctness of information in this document. Copyright by AUDI AG.

cardiagn.com

- The coolant level must be up to the upper marking -arrow- when the engine is cold.
- The coolant level may be above the upper marking when the engine is at operating temperature.

Protected by copyright. Copying for private or commercial purposes, in part or in whole, is not permitted unless authorised by AUDI AG. AUDI AG does not guarantee or accept any liability with respect to the correctness of information in this document. Copyright by AUDI AG.

cardiagn.com

2 Coolant Pump/Coolant Thermostat

⇒ “2.1 Overview - Coolant Pump”, page 151

⇒ “2.2 Overview - Electric Coolant Pump”, page 153

⇒ “2.3 Overview - Coolant Thermostat”, page 155

⇒ “2.4 Overview - Coolant Valve”, page 158

⇒ “2.5 Overview - Engine Coolant Temperature Sensor”, page 160

⇒ “2.6 Electric Coolant Pump, Removing and Installing”, page 163

⇒ “2.7 Coolant Pump, Removing and Installing”, page 166

⇒ “2.8 Map Controlled Engine Cooling Thermostat F265 , Removing and Installing”, page 166

⇒ “2.9 Engine Coolant Temperature Sensor G62 , Removing and Installing”, page 166

⇒ “2.10 Engine Temperature Control Temperature Sensor G694 , Removing and Installing”, page 166

⇒ “2.11 Coolant Temperature Sensor 2 G802 , Removing and Installing”, page 167

⇒ “2.12 High-Voltage System Engine Coolant Temperature Sensor, Removing and Installing”, page 167

⇒ “2.13 Coolant Valves, Removing and Installing”, page 173

2.1 Overview - Coolant Pump

cardiagn.com

Protected by copyright. Copying for private or commercial purposes, in part or in whole, is not permitted unless authorised by AUDI AG. AUDI AG does not guarantee or accept any liability with respect to the correctness of information in this document. Copyright by AUDI AG.

1 - Bolt

- ❑ Tightening specifications. Refer to ⇒ Servicing – 6-Cylinder TDI Common Rail Engine; Rep. Gr. 19 ; Coolant Pump/Coolant Regulation; Overview - Coolant Pump .

2 - Bolt

- ❑ Tightening specifications. Refer to ⇒ Servicing – 6-Cylinder TDI Common Rail Engine; Rep. Gr. 19 ; Coolant Pump/Coolant Regulation; Overview - Coolant Pump .

3 - Coolant Pump Ribbed Belt Pulley

- ❑ Installation instructions. Refer to ⇒ Servicing – 6-Cylinder TDI Common Rail Engine; Rep. Gr. 19 ; Coolant Pump/Coolant Regulation; Overview - Coolant Pump .

4 - Coolant Pump

- ❑ Removing and installing. Refer to ⇒ Servicing – 6-Cylinder TDI Common Rail Engine; Rep. Gr. 19 ; Coolant Pump/Coolant Regulation; Coolant Pump, Removing and Installing .

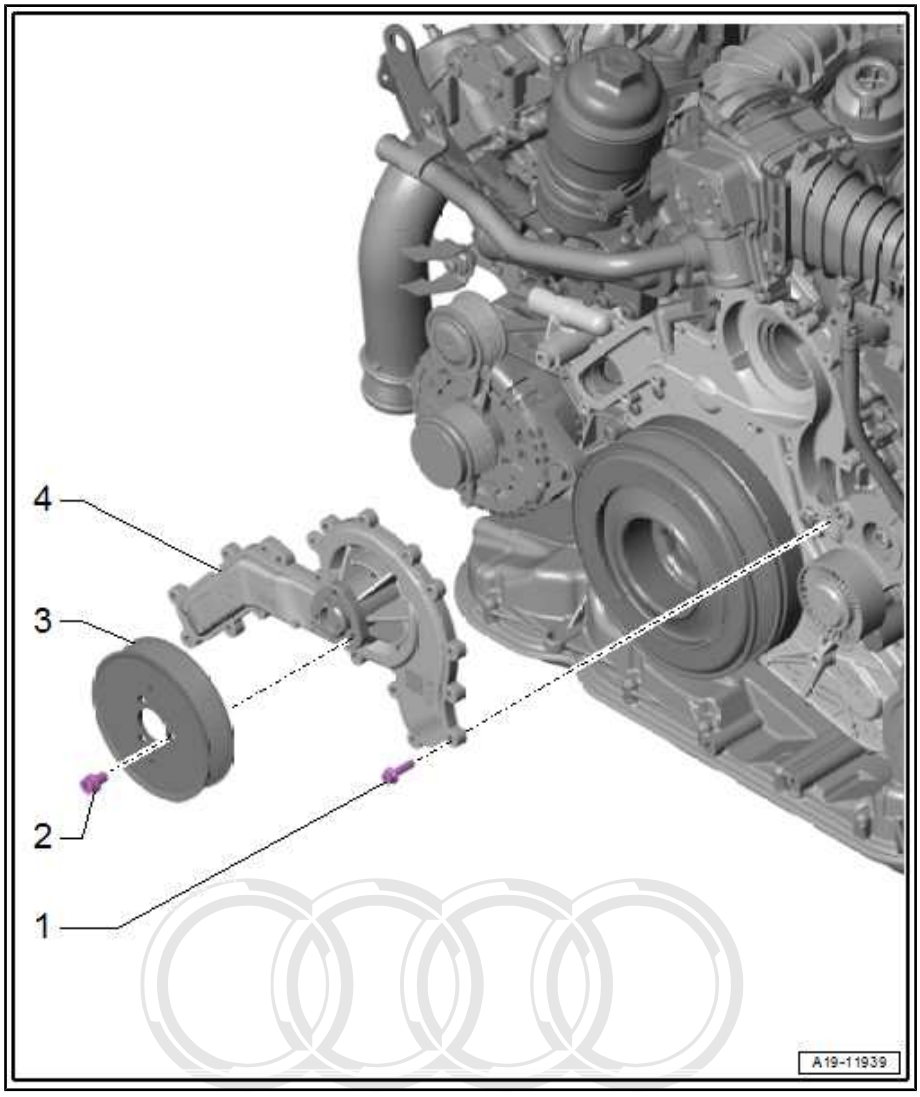

Protected by copyright. Copying for private or commercial purposes, in part or in whole, is not permitted unless authorised by AUDI AG. AUDI AG does not guarantee or accept any liability with respect to the correctness of information in this document. Copyright by AUDI AG.

cardiagn.com

2.2 Overview - Electric Coolant Pump

⇒ "2.2.1 Overview - Electric Coolant Pump, All Vehicles", page 153

2.2.1 Overview - Electric Coolant Pump, All Vehicles

1 - Left Longitudinal Member

2 - Bolt

- ❑ 1.5 Nm

3 - Support Base

4 - Bracket

- ❑ For the electric coolant pump

5 - Electric Coolant Pump

- ◆ Vehicle without high-voltage system: Coolant Recirculation Pump - V50- , removing and installing. Refer to ⇒ "2.6 Electric Coolant Pump, Removing and Installing", page 163 .
- ◆ Vehicle with high-voltage system: Thermal Management Coolant Pump 2 - V618- , removing and installing. Refer to ⇒ "2.6 Electric Coolant Pump, Removing and Installing", page 163 .
- ◆ Vehicle with parking heater: Recirculation Pump - V55- . Refer to ⇒ Heating, Ventilation and Air Conditioning; Rep. Gr. 82 ; Parking/Auxiliary Heater; Recirculation Pump -V55-, Removing and Installing .

6 - Coolant Hoses

7 - Transmission

8 - Coolant Hose

9 - Bracket

- ❑ For Transmission Fluid Cooling Valve - N509-

10 - Bolt

- ❑ 20 Nm

11 - Nut

- ❑ 9 Nm

12 - Transmission Fluid Cooling Valve - N509-

- ❑ Removing and installing. Refer to ⇒ "2.13.2 Transmission Fluid Cooling Valve N509, Removing and Installing", page 174 .

Protected by copyright. Copying for private or commercial purposes, in part or in whole, is not permitted unless authorised by AUDI AG. AUDI AG does not guarantee or accept any liability with respect to the correctness of information in this document. Copyright by AUDI AG.

cardiagn.com

13 - Coolant Hose

14 - Bolt

- ❑ 9 Nm

2.2.2 Overview - Electric Coolant Pump, Vehicle with High-Voltage System

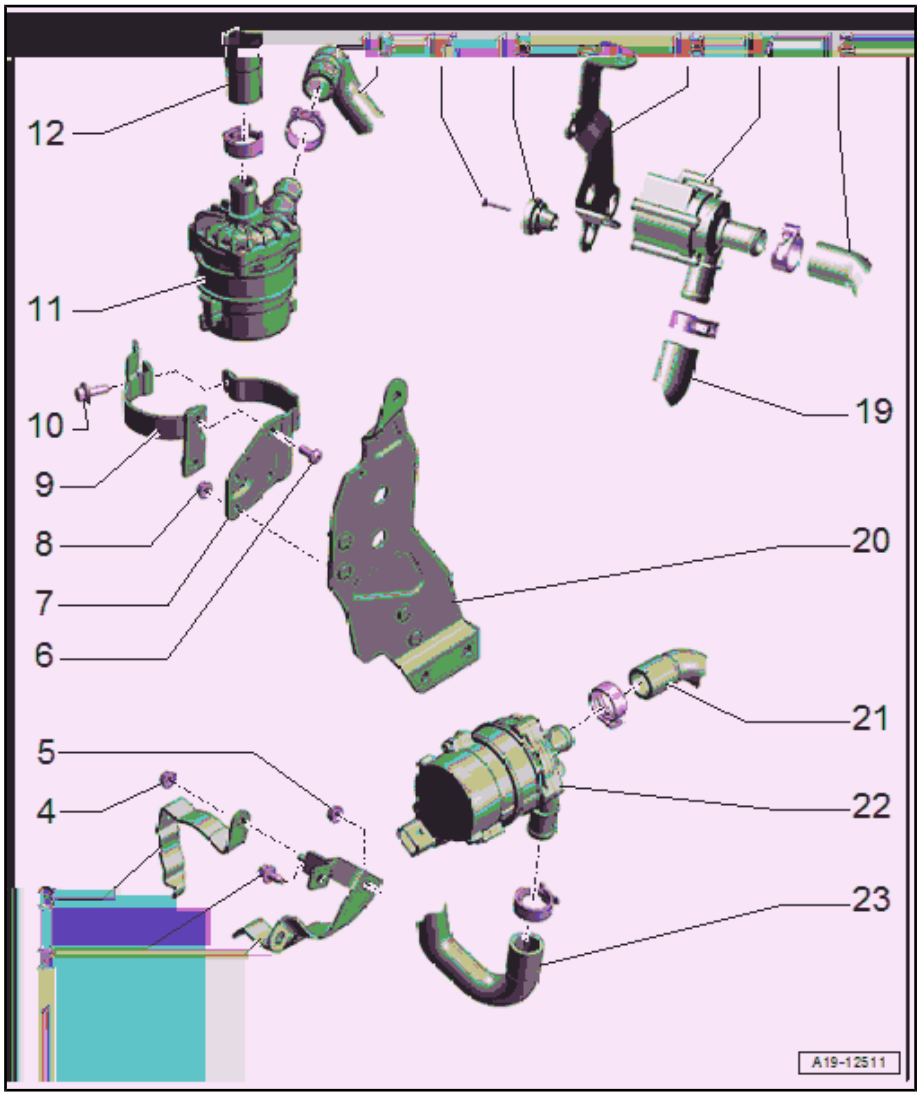

1 - Bracket

2 - Bolt

- ❑ 9 Nm

3 - Retaining Bracket

4 - Nut

- ❑ 9 Nm

5 - Nut

- ❑ 9 Nm

6 - Bolt

- ❑ 9 Nm

7 - Bracket

8 - Nut

- ❑ 9 Nm

9 - Retaining Bracket

10 - Bolt

- ❑ 9 Nm

11 - High-Voltage Battery Coolant Pump - V590-

- ❑ Component location: Lower left engine compartment
- ❑ Coolant hose connection diagram. Refer to ⇒ “1.1.4 Connection Diagram - Coolant Hoses, High-Voltage System Cooling Components”, page 132 .
- ❑ Removing and installing. Refer to ⇒ “2.6.3 High-Voltage Battery Coolant Pump V590 , Removing and Installing”, page 164 .

12 - Coolant Hose

13 - Coolant Hose

14 - Bolt

- ❑ 1.5 Nm

15 - Rubber Bushing

16 - Bracket

17 - Thermal Management Coolant Pump - V617-

- ❑ Component location: On the right side of the engine compartment, under the coolant expansion tank
- ❑ Removing and installing. Refer to ⇒ “2.6.2 Coolant Recirculation Pump V50 / Thermal Management Coolant Pump V617 , Removing and Installing, Vehicles with Parking Heater”, page 164 .

cardiagn.com

18 - Coolant Hose

19 - Coolant Hose

20 - Bracket

21 - Coolant Hose

22 - Thermal Management Coolant Pump 4 - V620-

- ❑ Component location: On the electric drive power and control electronics on the driver footwell underbody
- ❑ Coolant hose connection diagram. Refer to ⇒ “1.1.4 Connection Diagram - Coolant Hoses, High-Voltage System Cooling Components”, page 132 .
- ❑ Removing and installing. Refer to ⇒ “2.6.4 Thermal Management Coolant Pump 4 V620 , Removing and Installing”, page 165 .

23 - Coolant Hose

Copyright. Copying for private or commercial purposes, in part or in whole, is not permitted unless authorised by AUDI AG. AUDI AG does not guarantee or accept any liability with respect to the correctness of information in this document. Copyright by AUDI AG.

2.3 Overview - Coolant Thermostat

Map Controlled Engine Cooling Thermostat - F265-

1 - Bolt

- ❑ Tightening specifications. Refer to ⇒ Servicing – 6-Cylinder TDI Common Rail Engine; Rep. Gr. 19 ; Coolant Pipes; Overview - Coolant Pipes .

2 - Front Coolant Pipe

- ❑ Overview. Refer to ⇒ “3.1 Overview - Coolant Pipes”, page 180 .

3 - O-ring

- ❑ Installation instructions. Refer to ⇒ Servicing – 6-Cylinder TDI Common Rail Engine; Rep. Gr. 19 ; Coolant Pump/Coolant Regulation; Overview - Coolant Thermostat .

4 - Bolt

- ❑ Tightening specifications. Refer to ⇒ Servicing – 6-Cylinder TDI Common Rail Engine; Rep. Gr. 19 ; Coolant Pipes; Overview - Coolant Pipes .

5 - Map Controlled Engine Cooling Thermostat - F265-

- ❑ Removing and installing. Refer to ⇒ Servicing – 6-Cylinder TDI Common Rail Engine; Rep. Gr. 19 ; Coolant Pump/Coolant Regulation; Map Controlled Engine Cooling Thermostat - F265- , Removing and Installing .

cardiagn.com

6 - Seal

- ❑ Installation instructions. Refer to ⇒ Servicing – 6-Cylinder TDI Common Rail Engine; Rep. Gr. 19 ; Coolant Pump/Coolant Regulation; Overview - Coolant Thermostat .

7 - Seal

- ❑ Installation instructions. Refer to ⇒ Servicing – 6-Cylinder TDI Common Rail Engine; Rep. Gr. 19 ; Coolant Pump/Coolant Regulation; Overview - Coolant Thermostat .

8 - Bolt

- ❑ Tightening specifications. Refer to ⇒ Servicing – 6-Cylinder TDI Common Rail Engine; Rep. Gr. 19 ; Coolant Pipes; Overview - Coolant Pipes .

9 - Coolant Thermostat Housing

10 - O-Ring

- ❑ Installation instructions. Refer to ⇒ Servicing – 6-Cylinder TDI Common Rail Engine; Rep. Gr. 19 ; Coolant Pump/Coolant Regulation; Overview - Coolant Thermostat .

11 - Pressure Spring

- ❑ Removing and installing. Refer to ⇒ Servicing – 6-Cylinder TDI Common Rail Engine; Rep. Gr. 19 ; Coolant Pump/Coolant Regulation; Map Controlled Engine Cooling Thermostat - F265- , Removing and Installing .

12 - Slider

- ❑ For coolant valve
- ❑ Removing and installing. Refer to ⇒ Servicing – 6-Cylinder TDI Common Rail Engine; Rep. Gr. 19 ; Coolant Pump/Coolant Regulation; Map Controlled Engine Cooling Thermostat - F265- , Removing and Installing .

Protected by copyright. Copying for private or commercial purposes, in part or in whole, is not permitted unless authorised by AUDI AG. AUDI AG does not guarantee or accept any liability with respect to the correctness of information in this document. Copyright by AUDI AG.

13 - O-Ring

- ❑ Installation instructions. Refer to ⇒ Servicing – 6-Cylinder TDI Common Rail Engine; Rep. Gr. 19 ; Coolant Pump/Coolant Regulation; Overview - Coolant Thermostat .

Coolant Shut-Off Valve

cardiagn.com

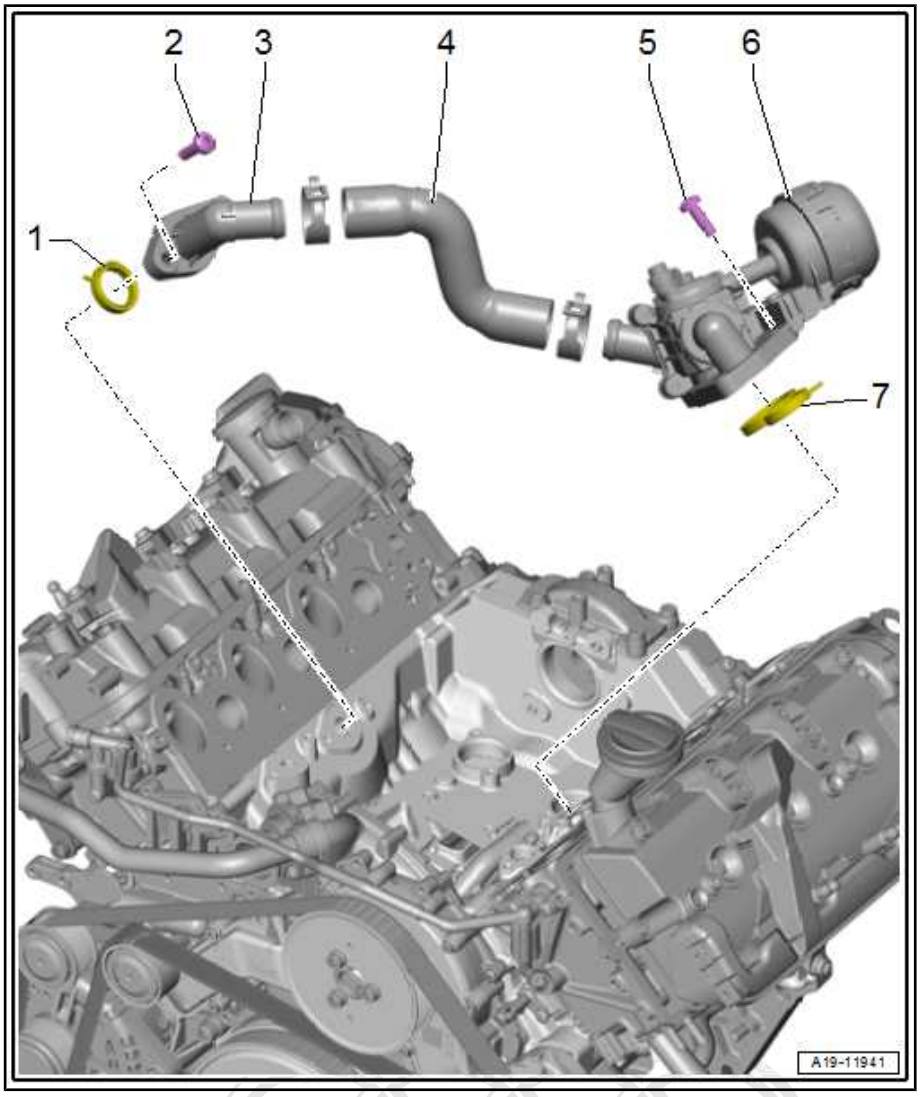

1 - Bolt

- ❑ Tightening specifications. Refer to ⇒ Servicing – 6-Cylinder TDI Common Rail Engine; Rep. Gr. 19 ; Coolant Pump/Coolant Regulation; Overview - Coolant Thermostat .

2 - Seal

- ❑ Installation instructions. Refer to ⇒ Servicing – 6-Cylinder TDI Common Rail Engine; Rep. Gr. 19 ; Coolant Pump/Coolant Regulation; Overview - Coolant Thermostat .

3 - Coolant Connection

4 - Coolant Hose

5 - Bolt

- ❑ Tightening specifications. Refer to ⇒ Servicing – 6-Cylinder TDI Common Rail Engine; Rep. Gr. 19 ; Coolant Pump/Coolant Regulation; Overview - Coolant Thermostat .

6 - Coolant Shut-Off Valve

- ❑ Removing and installing. Refer to ⇒ Servicing – 6-Cylinder TDI Common Rail Engine; Rep. Gr. 19 ; Coolant Pump/Coolant Regulation; Coolant Valves, Removing and Installing .

7 - Seal

- ❑ Installation instructions. Refer to ⇒ Servicing – 6-Cylinder TDI Common Rail Engine; Rep. Gr. 19 ; Coolant Pump/Coolant Regulation; Overview - Coolant Thermostat .

cardiagn.com

Protected by copyright. Copying for private or commercial purposes, in part or in whole, is not permitted unless authorised by AUDI AG. AUDI AG does not guarantee or accept any liability with respect to the correctness of information in this document. Copyright by AUDI AG.

2.4 Overview - Coolant Valve

Coolant Valves for Vehicle with High-Voltage System

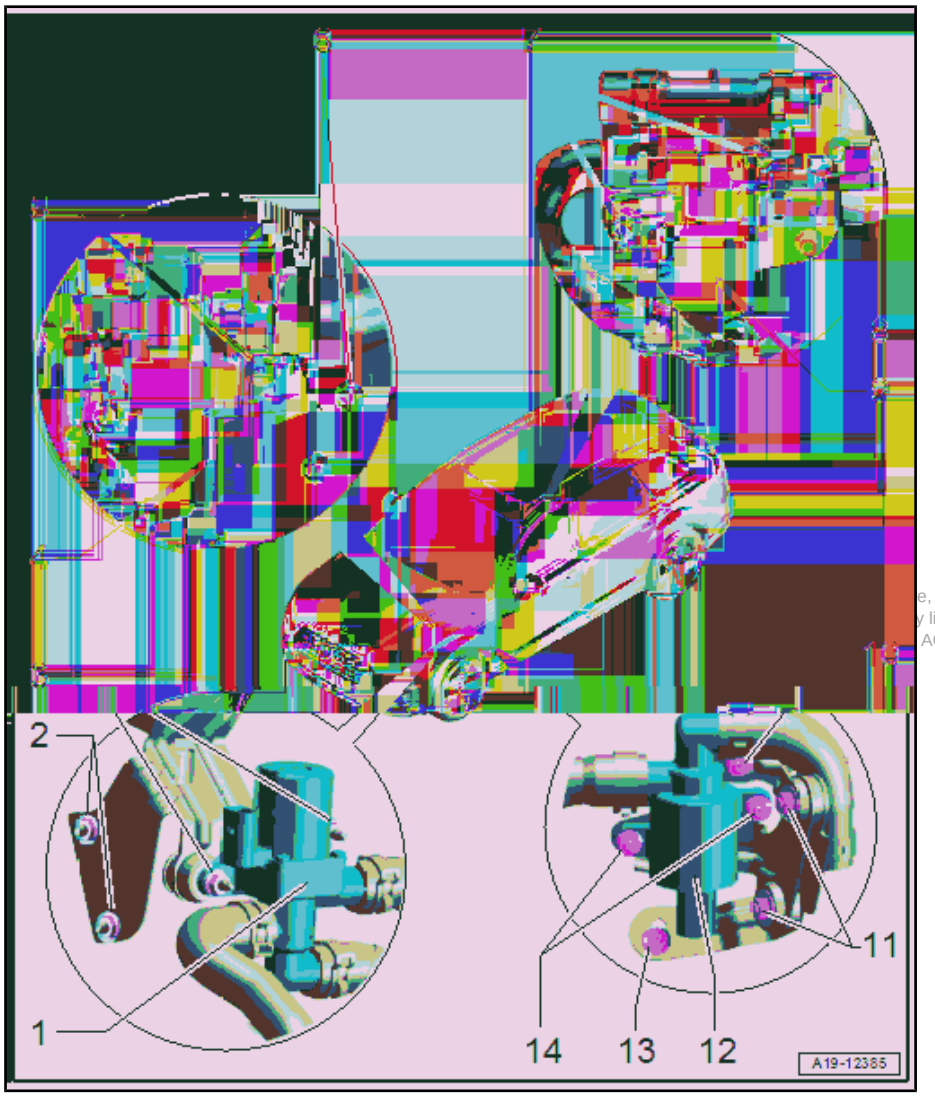

1 - Coolant Change-Over Valve 2 - N633-

- Installed location: In the front left engine compartment.
- Coolant hose connection diagram. Refer to ⇒ “1.1.4 Connection Diagram - Coolant Hoses, High-Voltage System Cooling Components”, page 132 .
- Removing and installing. Refer to ⇒ “2.13.4 Coolant Change-Over Valve 2 N633 , Removing and Installing, Vehicles with High-Voltage System”, page 176 .

2 - Nuts

- 8 Nm

3 - Nuts

- 8 Nm

4 - Coolant Change-Over Valve 1 - N632-

- Component location: in the left rear of the engine compartment.
- Coolant hose connection diagram. Refer to ⇒ “1.1.4 Connection Diagram - Coolant Hoses, High-Voltage System Cooling Components”, page 132 .
- Removing and installing. Refer to ⇒ “2.13.3 Coolant Change-Over Valve 1 N632 , Removing and Installing, Vehicles with High-Voltage System”, page 175 .

5 - Nuts

- 8 Nm

6 - Nuts

- 8 Nm

7 - Bolts

- 8 Nm

8 - Nuts

- 8 Nm

9 - Coolant Change-Over Valve 4 - N635-

- Component location: on the rear underbody
- Coolant hose connection diagram. Refer to ⇒ “1.1.4 Connection Diagram - Coolant Hoses, High-Voltage System Cooling Components”, page 132 .

e, is not
y liability
AG.

cardiagn.com

- ❑ Removing and installing. Refer to
  ⇒ “2.13.5 Coolant Change-Over Valve 4 N635 , Removing and Installing, Vehicles with High-Voltage System”, page 177 .

10 - Nuts

- ❑ 8 Nm

11 - Nuts

- ❑ 8 Nm

12 - Coolant Shut-Off Valve 2 - N645-

- ❑ Component location: Inside the left front wheel housing
- ❑ Coolant hose connection diagram. Refer to
  ⇒ “1.1.4 Connection Diagram - Coolant Hoses, High-Voltage System Cooling Components”, page 132 .
- ❑ Removing and installing. Refer to
  ⇒ “2.13.6 Coolant Shut-Off Valve 2 N645 , Removing and Installing, Vehicles with High-Voltage System”, page 178 .

13 - Nuts

- ❑ 8 Nm

14 - Nuts

- ❑ 8 Nm

Protected by copyright. Copying for private or commercial purposes, in part or in whole, is not permitted unless authorised by AUDI AG. AUDI AG does not guarantee or accept any liability with respect to the correctness of information in this document. Copyright by AUDI AG.

cardiagn.com

2.5 Overview - Engine Coolant Temperature Sensor

⇒ “2.5.1 Overview - Engine Coolant Temperature Sensor, All Vehicles”, page 160

⇒ “2.5.2 Overview - Engine Coolant Temperature Sensor, Vehicle with High-Voltage System”, page 161

2.5.1 Overview - Engine Coolant Temperature Sensor, All Vehicles

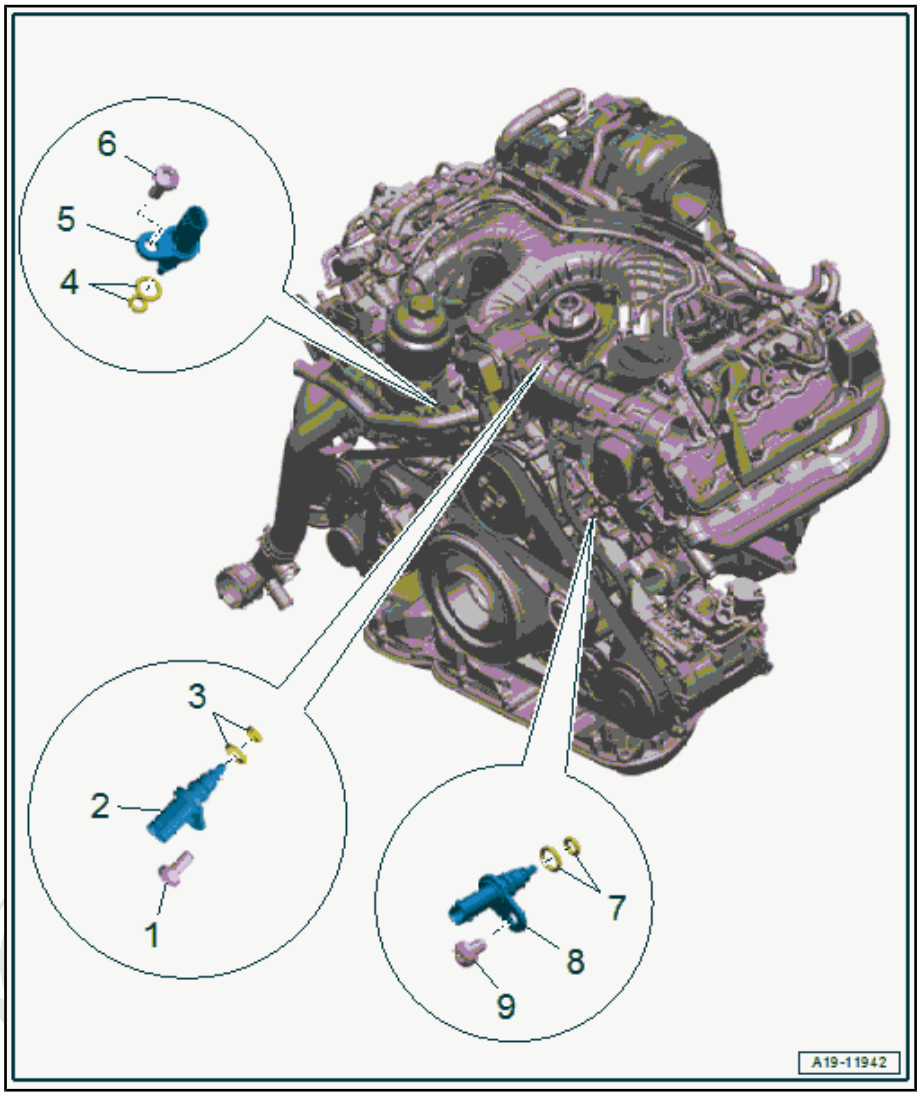

1 - Bolt

- ❑ Tightening specifications. Refer to ⇒ Servicing – 6-Cylinder TDI Common Rail Engine; Rep. Gr. 19 ; Coolant Pump/Coolant Regulation; Overview - Engine Coolant Temperature Sensor .

2 - Engine Coolant Temperature Sensor - G62-

- ❑ Removing and installing. Refer to ⇒ Servicing – 6-Cylinder TDI Common Rail Engine; Rep. Gr. 19 ; Coolant Pump/Coolant Regulation; Engine Coolant Temperature Sensor - G62- , Removing and Installing .

3 - O-Rings

- ❑ Installation instructions. Refer to ⇒ Servicing – 6-Cylinder TDI Common Rail Engine; Rep. Gr. 19 ; Coolant Pump/Coolant Regulation; Overview - Engine Coolant Temperature Sensor .

4 - O-Rings

- ❑ Installation instructions. Refer to ⇒ Servicing – 6-Cylinder TDI Common Rail Engine; Rep. Gr. 19 ; Coolant Pump/Coolant Regulation; Overview - Engine Coolant Temperature Sensor .

5 - Coolant Temperature Sensor 2 - G802-

- ❑ Removing and installing. Refer to ⇒ “2.11 Coolant Temperature Sensor 2 G802 , Removing and Installing”, page 167 .

6 - Bolt

- ❑ Tightening specifications. Refer to ⇒ Servicing – 6-Cylinder TDI Common Rail Engine; Rep. Gr. 19 ; Coolant Pump/Coolant Regulation; Overview - Engine Coolant Temperature Sensor .

7 - O-rings

- ❑ Installation instructions. Refer to ⇒ Servicing – 6-Cylinder TDI Common Rail Engine; Rep. Gr. 19 ; Coolant Pump/Coolant Regulation; Overview - Engine Coolant Temperature Sensor .

Protected by copyright. Copying for private or commercial purposes, in part or in whole, is not permitted unless authorised by AUDI AG. AUDI AG does not guarantee or accept any liability with respect to the correctness of information in this document. Copyright by AUDI AG.

cardiagn.com

8 - Engine Temperature Control Sensor - G694-

- Removing and installing. Refer to ⇒ “2.10 Engine Temperature Control Temperature Sensor G694 , Removing and Installing”, page 166 .

9 - Bolt

- Tightening specifications. Refer to ⇒ Servicing – 6-Cylinder TDI Common Rail Engine; Rep. Gr. 19 ; Coolant Pump/Coolant Regulation; Overview - Engine Coolant Temperature Sensor .

2.5.2 Overview - Engine Coolant Temperature Sensor, Vehicle with High-Voltage System

1 - Thermal Management Coolant Temperature Sensor 6 - G907-

- Replace the O-ring after removing
- Component location: In the left rear of the engine compartment.
- Coolant hose connection diagram. Refer to ⇒ “1.1.4 Connection Diagram - Coolant Hoses, High-Voltage System Cooling Components”, page 132 .
- Removing and installing. Refer to ⇒ “2.12.5 Thermal Management Coolant Temperature Sensors 6 and 8 G907 / G968 , Removing and Installing”, page 171 .
- Clamp checking for secure fit

2 - Thermal Management Coolant Temperature Sensor 8 - G968-

- Replace the O-ring after removing
- Component location: In the left rear of the engine compartment.
- Coolant hose connection diagram. Refer to ⇒ “1.1.4 Connection Diagram - Coolant Hoses, High-Voltage System Cooling Components”, page 132 .
- Removing and installing. Refer to ⇒ “2.12.5 Thermal Management Coolant Temperature Sensors 6 and 8 G907 / G968 , Removing and Installing”, page 171 .
- Clamp checking for secure fit

3 - Thermal Management Coolant Temperature Sensor 3 - G904-

- Replace the O-ring after removing
- Component location: on the drive motor top
- Coolant hose connection diagram. Refer to ⇒ “1.1.4 Connection Diagram - Coolant Hoses, High-Voltage System Cooling Components”, page 132 .

cardiagn.com

- Removing and installing. Refer to ⇒ “2.12.2 Thermal Management Coolant Temperature Sensor 3 G904 , Removing and Installing”, page 168 .
- Clamp checking for secure fit

4 - Thermal Management Coolant Temperature Sensor 7 - G908-

- Replace the O-ring after removing
- Component location: Inside the right wheel housing
- Coolant hose connection diagram. Refer to ⇒ “1.1.3 Connection Diagram - Coolant Hoses, Vehicle with High-Voltage System”, page 130 .
- Removing and installing. Refer to ⇒ “2.12.6 Thermal Management Coolant Temperature Sensor 7 G908 , Removing and Installing”, page 172 .
- Clamp checking for secure fit

5 - Thermal Management Coolant Temperature Sensor 4 - G905-

- Replace the O-ring after removing
- Component location: In the front right side of the engine compartment
- Coolant hose connection diagram. Refer to ⇒ “1.1.3 Connection Diagram - Coolant Hoses, Vehicle with High-Voltage System”, page 130 .
- Removing and installing. Refer to ⇒ “2.12.3 Thermal Management Coolant Temperature Sensor 4 G905 , Removing and Installing”, page 169 .
- Clamp checking for secure fit

6 - High-Voltage Battery Coolant Temperature Sensor 1 - G898-

- Replace the O-ring after removing
- Component location: On the front high-voltage battery (right)
- Coolant hose connection diagram. Refer to ⇒ “1.1.4 Connection Diagram - Coolant Hoses, High-Voltage System Cooling Components”, page 132 .
- Removing and installing. Refer to ⇒ “2.12.7 High-Voltage Battery Coolant Temperature Sensors 1 and 2 G898 / G899 , Removing and Installing”, page 173 .

7 - Bolts

- Tightening specifications. Refer to ⇒ “3.1 Overview - High-Voltage Battery”, page 308 .

8 - High-Voltage Battery Coolant Temperature Sensor 2 - G899-

- Replace the O-ring after removing
- Component location: On the front high-voltage battery (left)
- Coolant hose connection diagram. Refer to ⇒ “1.1.4 Connection Diagram - Coolant Hoses, High-Voltage System Cooling Components”, page 132 .
- Removing and installing. Refer to ⇒ “2.12.7 High-Voltage Battery Coolant Temperature Sensors 1 and 2 G898 / G899 , Removing and Installing”, page 173 .

9 - Thermal Management Coolant Temperature Sensor 5 - G906-

- Replace the O-ring after removing
- Component location: On the left front underbody
- Coolant hose connection diagram. Refer to ⇒ “1.1.4 Connection Diagram - Coolant Hoses, High-Voltage System Cooling Components”, page 132 .
- Removing and installing. Refer to ⇒ “2.12.1 Thermal Management Coolant Temperature Sensor 1 G902 , Removing and Installing”, page 167 .

10 - Thermal Management Coolant Temperature Sensor 1 - G902-

- Replace the O-ring after removing
- Component location: In the left plenum chamber
- Coolant hose connection diagram. Refer to ⇒ “1.1.4 Connection Diagram - Coolant Hoses, High-Voltage System Cooling Components”, page 132 .

Protected by copyright. Copying for private or commercial purposes, in part or in whole, is not permitted unless authorised by AUDI AG. AUDI AG does not guarantee or accept any liability with respect to the correctness of information in this document. Copyright by AUDI AG.

cardiagn.com

- ❑ Removing and installing. Refer to
  ⇒ “2.12.4 Thermal Management Coolant Temperature Sensor 5 G906 , Removing and Installing”, page 170 .
- ❑ Clamp checking for secure fit

2.6 Electric Coolant Pump, Removing and Installing

⇒ “2.6.1 Coolant Recirculation Pump V50 / Thermal Management Coolant Pump 2 V618 , Removing and Installing”, page 163

⇒ “2.6.2 Coolant Recirculation Pump V50 / Thermal Management Coolant Pump V617 , Removing and Installing, Vehicles with Parking Heater”, page 164

⇒ “2.6.3 High-Voltage Battery Coolant Pump V590 , Removing and Installing”, page 164

⇒ “2.6.4 Thermal Management Coolant Pump 4 V620 , Removing and Installing”, page 165

2.6.1 Coolant Recirculation Pump - V50- / Thermal Management Coolant Pump 2 - V618- , Removing and Installing

Special tools and workshop equipment required

- ♦ Hose Clamps - Up To 25mm - 3094-
- ♦ Hose Clip Pliers - VAS6362-

Removing

– Remove the right front section of the wheel housing liner. Refer to ⇒ Body Exterior; Rep. Gr. 66 ; Wheel Housing Liner; Front Wheel Housing Liner, Removing and Installing .

– Disconnect the connector -2-.

– Loosen the hose clamps -1-, then clamp off the coolant hoses with the -3094- and then remove them.

– Remove the bolts -3- and remove the coolant pump.

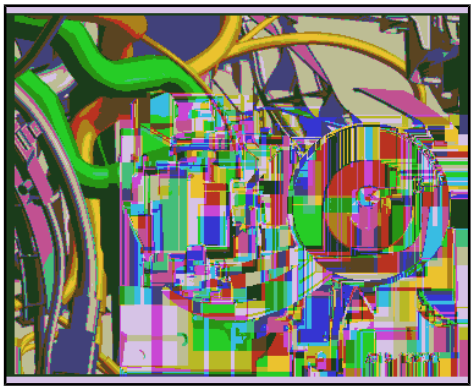

Installing

Install in reverse order of removal and note the following:

- Secure all hose connections with hose clamps that match the ones used in series production. Refer to the Parts Catalog.
- Used coolant cannot be used again.

– Fill with coolant. Refer to
⇒ “1.3 Coolant, Draining and Filling”, page 140 .

Tightening Specifications

- ♦ Refer to
  ⇒ “2.2.1 Overview - Electric Coolant Pump, All Vehicles”, page 153
- ♦ Refer to ⇒ Body Exterior; Rep. Gr. 66 ; Wheel Housing Liner; Overview - Front Wheel Housing Liner .

Protected by copyright. Copying for private or commercial purposes, in part or in whole, is not permitted unless authorized by AUDI AG. AUDI AG does not guarantee or accept any liability with respect to the correctness of information in this document. Copyright by AUDI AG.

cardiagn.com

2.6.2 Coolant Recirculation Pump -V50- / Thermal Management Coolant Pump - V617- , Removing and Installing, Vehicles with Parking Heater

Special tools and workshop equipment required

- Hose Clamps - Up To 25mm - 3094-
- Hose Clip Pliers - VAS6362-

Removing

– Remove the bolts -1 and 4-.

– Disconnect the connector -3- and move the coolant expansion tank -2- to the side.

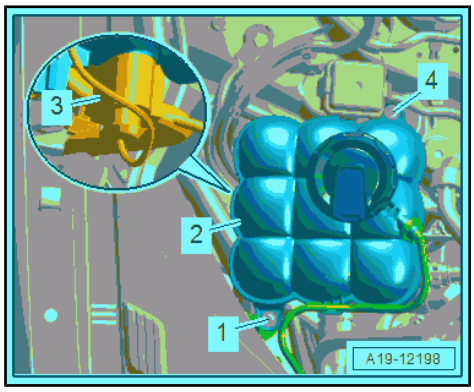

– Disconnect the connector -3-.

– Remove the bolts -arrows-.

– Loosen the hose clamps -4-, then clamp off the coolant hoses with the -3094- and then remove them.

– Remove the bolts -1- and remove the coolant pump from the bracket -2-.

Installing

Install in reverse order of removal and note the following:

- Secure all hose connections with hose clamps that match the ones used in series production. Refer to the Parts Catalog.
- Used coolant cannot be used again.

– Fill with coolant. Refer to ⇒ “1.3 Coolant, Draining and Filling”, page 140 .

Tightening Specifications

- Refer to ⇒ “2.2.1 Overview - Electric Coolant Pump, All Vehicles”, page 153
- Refer to ⇒ Fig. ““Coolant Expansion Tank - Tightening Specification”“ , page 182

Protected by copyright. Copyright or private and commercial purposes, in part or in whole, is not permitted unless authorised by AUDI AG. AUDI AG does not guarantee or accept any liability with respect to the correctness of information in this document. Copyright by AUDI AG.

2.6.3 High-Voltage Battery Coolant Pump - V590- , Removing and Installing

Special tools and workshop equipment required

- Hose Clamps - Up To 25mm - 3094-
- Hose Clip Pliers - VAS6362-

cardiagn.com

Removing

– Remove the emissions control module. Refer to ⇒ “2.2 Emissions Control Module, Removing and Installing”, page 268 .

– Remove the bolt -1- and the tab -2- for the emissions control module.

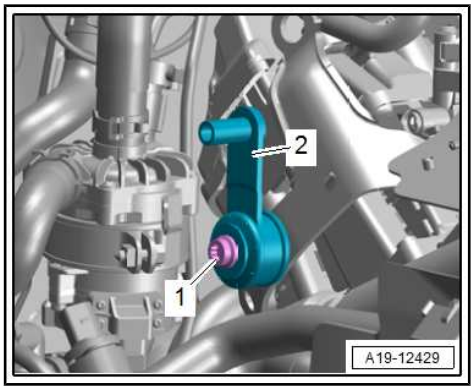

– Disconnect the connector -1-.

– Place a cloth underneath to catch any escaping coolant.

– Loosen the hose clamps -2- to clamp off the coolant hoses with the -3094- and remove them.

– Remove the nuts -3- and then remove the High-Voltage Battery Coolant Pump - V590- .

– Remove the bolts -arrows- and the bracket.

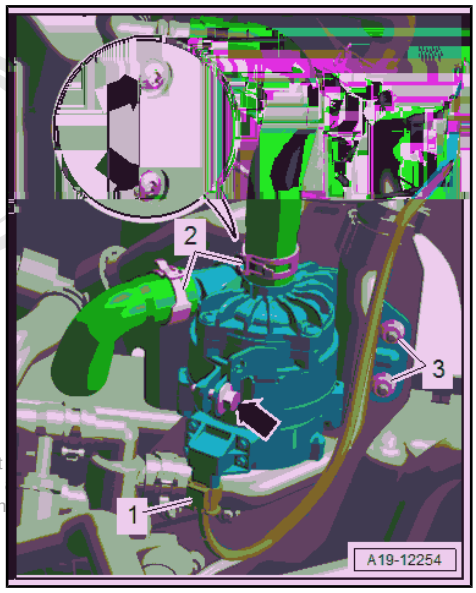

Installing

Install in reverse order of removal and note the following:

- Secure all hose connections with hose clamps that match the ones used in series production. Refer to the Parts Catalog.
- Used coolant cannot be used again.

– Install the emissions control module. Refer to ⇒ “2.2 Emissions Control Module, Removing and Installing”, page 268 .

– Fill with coolant. Refer to ⇒ “1.3.2 Coolant, Draining and Filling, Vehicle with High-Voltage System, Engine Coolant Circuit”, page 143 .

Tightening Specifications

♦ Refer to ⇒ “2.2.2 Overview - Electric Coolant Pump, Vehicle with High-Voltage System”, page 154

2.6.4 Thermal Management Coolant Pump 4 - V620- , Removing and Installing

Special tools and workshop equipment required

♦ Hose Clamps - Up To 25mm - 3094-

♦ Hose Clip Pliers - VAS6362-

Removing

– Remove the rear and left noise insulation. Refer to ⇒ Body Exterior; Rep. Gr. 66 ; Noise Insulation; Noise Insulation, Removing and Installing .

cardiagn.com

– Disconnect the connector -2-.
– Place a cloth underneath to catch any escaping coolant.
– Loosen the hose clamps -1-, then clamp off the coolant hoses with the -3094- and then remove them.
– Free up the coolant hose.
– Remove the nut -arrow-, open the retaining bracket and remove the Thermal Management Coolant Pump 4 - V620- .

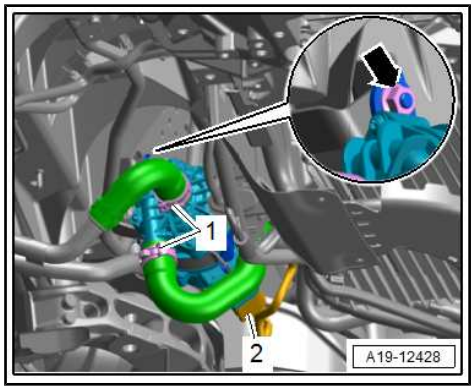

Installing

Install in reverse order of removal and note the following:

- Secure all hose connections with hose clamps that match the ones used in series production. Refer to the Parts Catalog.
- Used coolant cannot be used again.

– Fill with coolant. Refer to
⇒ “1.3.2 Coolant, Draining and Filling, Vehicle with High-Voltage System, Engine Coolant Circuit”, page 143.

Protected by copyright. Copying for private or commercial purposes, in part or in whole, is not permitted unless authorised by AUDI AG. AUDI AG does not guarantee or accept any liability with respect to the correctness of information in this document. Copyright by AUDI AG.

Tightening Specifications

♦ Refer to
⇒ “2.2.2 Overview - Electric Coolant Pump, Vehicle with High-Voltage System”, page 154

♦ Refer to ⇒ Body Exterior; Rep. Gr. 66 ; Noise Insulation; Overview - Noise Insulation .

2.7 Coolant Pump, Removing and Installing

All procedures are described. Refer to ⇒ Servicing – 6-Cylinder TDI Common Rail Engine; Rep. Gr. 19 ; Coolant Pump/Coolant Regulation; Coolant Pump, Removing and Installing .

2.8 Map Controlled Engine Cooling Thermostat - F265- , Removing and Installing

All procedures are described. Refer to ⇒ Servicing – 6-Cylinder TDI Common Rail Engine; Rep. Gr. 19 ; Coolant Pump/Coolant Regulation; Map Controlled Engine Cooling Thermostat - F265- , Removing and Installing .

2.9 Engine Coolant Temperature Sensor - G62- , Removing and Installing

All procedures are described. Refer to ⇒ Servicing – 6-Cylinder TDI Common Rail Engine; Rep. Gr. 19 ; Coolant Pump/Coolant Regulation; Engine Coolant Temperature Sensor - G62- , Removing and Installing .

2.10 Engine Temperature Control Temperature Sensor - G694- , Removing and Installing

– Remove the front noise insulation. Refer to ⇒ Body Exterior; Rep. Gr. 66 ; Noise Insulation; Noise Insulation, Removing and Installing .

All additional procedures are described. Refer to ⇒ Servicing – 6-Cylinder TDI Common Rail Engine; Rep. Gr. 19 ; Coolant Pump/Coolant Regulation; Engine Temperature Control Sensor - G694- , Removing and Installing .

cardiagn.com

Tightening Specifications

- Refer to ⇒ Body Exterior; Rep. Gr. 66 ; Noise Insulation; Overview - Noise Insulation .

2.11 Coolant Temperature Sensor 2 - G802- , Removing and Installing

Removing

– Remove the air filter housing. Refer to ⇒ "3.2 Air Filter Housing, Removing and Installing", page 229 .

All additional procedures are described. Refer to ⇒ Servicing – 6-Cylinder TDI Common Rail Engine; Rep. Gr. 19 ; Coolant Pump/Coolant Regulation; Coolant Temperature Sensor 2 - G802- , Removing and Installing .

Installing

Additional procedures:

– Install the air filter housing. Refer to ⇒ "3.2 Air Filter Housing, Removing and Installing", page 229 .

2.12 High-Voltage System Engine Coolant Temperature Sensor, Removing and Installing

⇒ "2.12.1 Thermal Management Coolant Temperature Sensor 1 G902 , Removing and Installing", page 167

⇒ "2.12.2 Thermal Management Coolant Temperature Sensor 3 G904 , Removing and Installing", page 168

⇒ "2.12.3 Thermal Management Coolant Temperature Sensor 4 G905 , Removing and Installing", page 169

⇒ "2.12.4 Thermal Management Coolant Temperature Sensor 5 G906 , Removing and Installing", page 170

⇒ "2.12.5 Thermal Management Coolant Temperature Sensors 6 and 8 G907 / G968 , Removing and Installing", page 171

⇒ "2.12.6 Thermal Management Coolant Temperature Sensor 7 G908 , Removing and Installing", page 172

⇒ "2.12.7 High-Voltage Battery Coolant Temperature Sensors 1 and 2 G898 / G899 , Removing and Installing", page 173

Reproduction, copying for private or commercial purposes, in part or in whole, is not permitted unless authorised by AUDI AG. AUDI AG does not guarantee or accept any liability with respect to the correctness of information in this document. Copyright by AUDI AG.

2.12.1 Thermal Management Coolant Temperature Sensor 1 - G902- , Removing and Installing

Procedure

- The engine is cold.

cardiagn.com

– To remove the residual pressure in the cooling system, open the coolant expansion tank cap -arrow-.

– Remove the windshield wiper motor. Refer to ⇒ Electrical Equipment; Rep. Gr. 92 ; Windshield Wiper System; Windshield Wiper Motor - V- Removing and Installing .

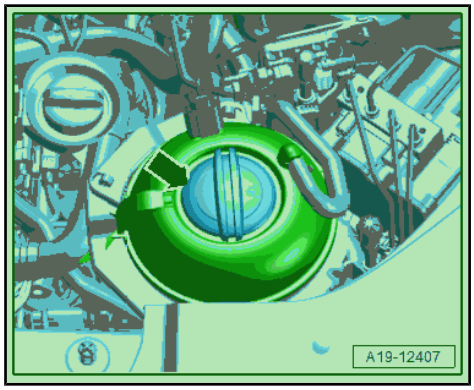

– Disconnect the connector -1-.

– Place a cloth underneath to catch any escaping coolant.

– Remove the clamp -2- and remove the engine coolant temperature sensor.

• Replace the O-ring after removing.

– To prevent coolant loss, install the new coolant temperature sensor immediately.

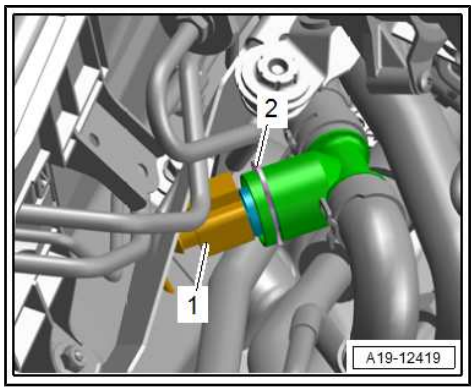

Further installation is performed in reverse order of removal, while noting the following:

– Fill with coolant. Refer to ⇒ “1.3.2 Coolant, Draining and Filling, Vehicle with High-Voltage System, Engine Coolant Circuit”, page 143 .

Tightening Specifications

♦ Refer to ⇒ Electrical Equipment; Rep. Gr. 92 ; Windshield Wiper System; Overview - Windshield Wiper System .

2.12.2 Thermal Management Coolant Temperature Sensor 3 - G904- , Removing and Installing

Procedure

• The engine is cold.

• When installing, install all heat shield boots back in the same positions.

Protected by Copyright. Copying for private or commercial purposes, in part or in whole, is not permitted unless authorised by AUDI AG. AUDI AG does not guarantee or accept any liability with respect to the correctness of information in this document. Copyright by AUDI AG.

– To remove the residual pressure in the cooling system, quickly open the coolant expansion tank cap -arrow-.

– Remove the left subframe shield upper section. Refer to ⇒ Suspension, Wheels, Steering; Rep. Gr. 40 ; Subframe; Subframe Shield, Removing and Installing .

– Remove the rear noise insulation. Refer to ⇒ Body Exterior; Rep. Gr. 66 ; Noise Insulation; Noise Insulation, Removing and Installing .

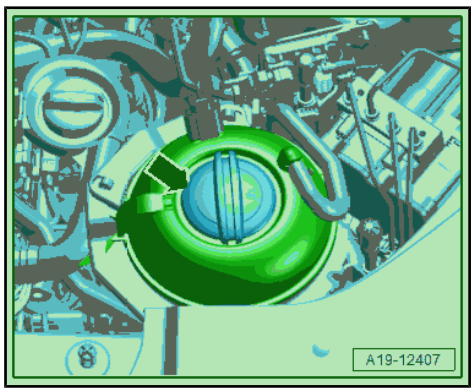

cardiagn.com

– Remove the heat shield boot and disconnect the connector -1-.

– Place a cloth underneath to catch any escaping coolant.

– Remove the clamp -2- and remove the engine coolant temperature sensor.

• Replace the O-ring after removing.

– To prevent coolant loss, install the new coolant temperature sensor immediately.

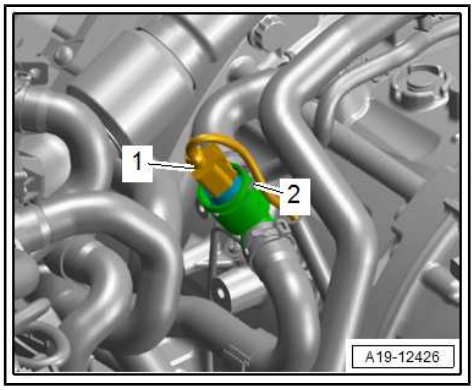

Further installation is performed in reverse order of removal, while noting the following:

– Fill with coolant. Refer to ⇒ “1.3.2 Coolant, Draining and Filling, Vehicle with High-Voltage System, Engine Coolant Circuit”, page 143 .

Tightening Specifications

Protected by copyright. Copying for private or commercial purposes, in part or in whole, is not permitted unless authorised by AUDI AG. AUDI AG does not guarantee or accept any liability with respect to the correctness of information in this document. Copyright by AUDI AG.

♦ Refer to ⇒ Suspension, Wheels, Steering; Rep. Gr. 40 ; Subframe; Overview - Subframe .

♦ Refer to ⇒ Body Exterior; Rep. Gr. 66 ; Noise Insulation; Overview - Noise Insulation .

2.12.3 Thermal Management Coolant Temperature Sensor 4 - G905- , Removing and Installing

Procedure

• The engine is cold.

– To reduce the residual pressure in the cooling system, open the coolant expansion tank cap -1- by releasing the catch in direction of -arrow-.

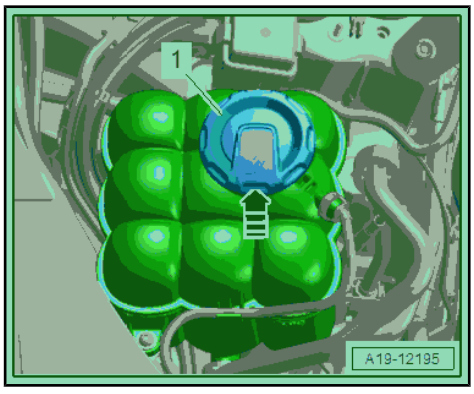

– Remove the bolts -1 and 4-.

– Disconnect the connector -3- and move the coolant expansion tank -2- to the side.

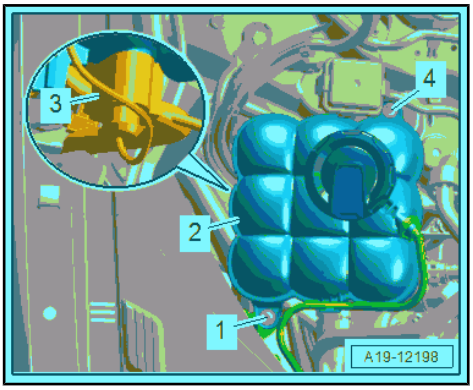

cardiagn.com

– Disconnect the connector -2-.

– Place a cloth underneath to catch any escaping coolant.

– Remove the clamp -1- and the Thermal Management Coolant Temperature Sensor 4 - G905- .

• Replace the O-ring after removing.

– To prevent coolant loss, install the new coolant temperature sensor immediately.

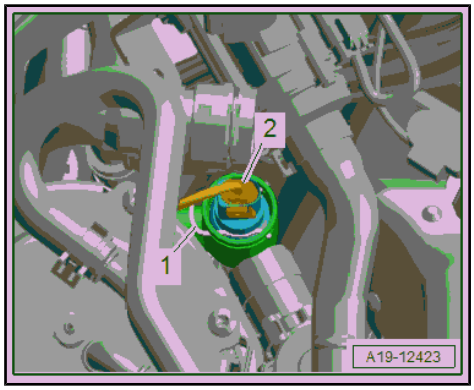

Further installation is performed in reverse order of removal, while noting the following:

– Fill with coolant. Refer to ⇒ “1.3.2 Coolant, Draining and Filling, Vehicle with High-Voltage System, Engine Coolant Circuit”, page 143 .

Tightening Specifications

♦ Refer to ⇒ Fig. ““Coolant Expansion Tank - Tightening Specification”“ , page 182

2.12.4 Thermal Management Coolant Temperature Sensor 5 - G906- , Removing and Installing

Procedure

• The engine is cold.

• When installing, install all heat shield boots back in the same positions.

– To remove the residual pressure in the cooling system, quickly open the coolant expansion tank cap -arrow-.

– Remove the left underbody trim panel. Refer to ⇒ Body Exterior; Rep. Gr. 66 ; Underbody Trim Panel; Underbody Trim Panels, Removing and Installing .

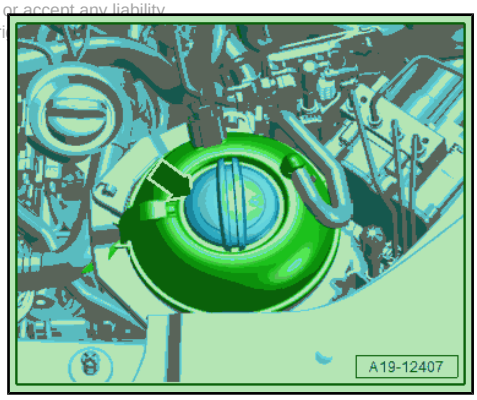

Protected by copyright. Copying for private or commercial purposes, in part or in whole, is not permitted unless authorised by AUDI AG. AUDI AG does not guarantee or accept any liability with respect to the correctness of information in this document. Copyright by AUDI AG.
cardiagn.com

– Disconnect the connector -1-.

– Place a cloth underneath to catch any escaping coolant.

– Remove the clamp -2- and remove the engine coolant temperature sensor.

• Replace the O-ring after removing.

– To prevent coolant loss, install the new coolant temperature sensor immediately.

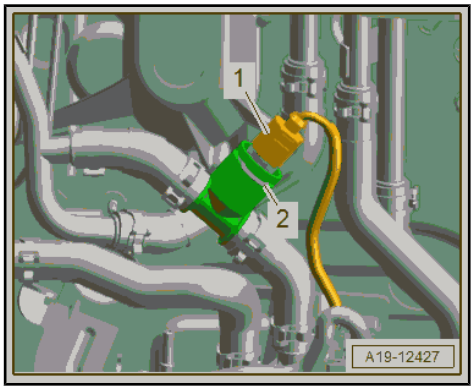

Further installation is performed in reverse order of removal, while noting the following:

Protected by copyright. Copying for private or commercial purposes, in part or in whole, is not permitted without the prior written consent of AUDI AG. AUDI AG does not guarantee or accept any liability with respect to the correctness of information in this document. Copyright by AUDI AG.

– Fill with coolant. Refer to ⇒ “1.3.2 Coolant, Draining and Filling, Vehicle with High-Voltage System, Engine Coolant Circuit”, page 143 .

Tightening Specifications

♦ Refer to ⇒ Body Exterior; Rep. Gr. 66 ; Underbody Trim Panel; Overview - Underbody Trim Panels .

2.12.5 Thermal Management Coolant Temperature Sensors 6 and 8 -G907- / -G968- , Removing and Installing

Procedure

• The engine is cold.

– To remove the residual pressure in the cooling system, open the coolant expansion tank cap -arrow-.

– Remove the air filter upper section. Refer to ⇒ “3.2 Air Filter Housing, Removing and Installing”, page 229 .

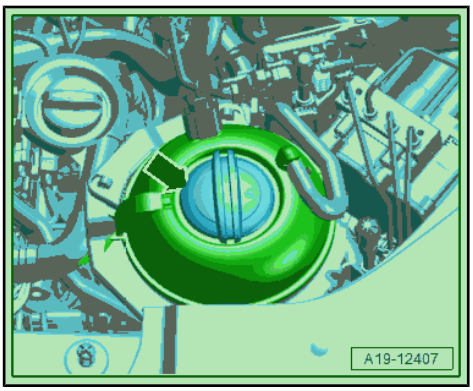

Thermal Management Coolant Temperature Sensor 6 - G907- :

– Disconnect the connector -1-.

– Place a cloth underneath to catch any escaping coolant.

– Remove the clamp -2- and the Thermal Management Coolant Temperature Sensor 6 - G907- .

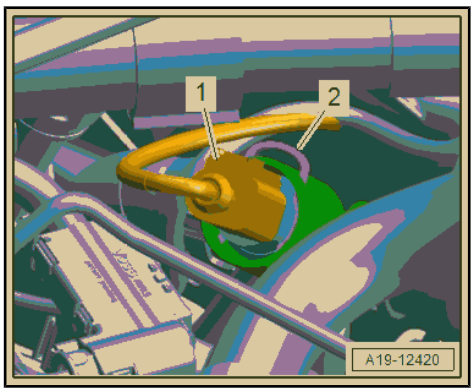

cardiagn.com

Thermal Management Coolant Temperature Sensor 8 - G968-

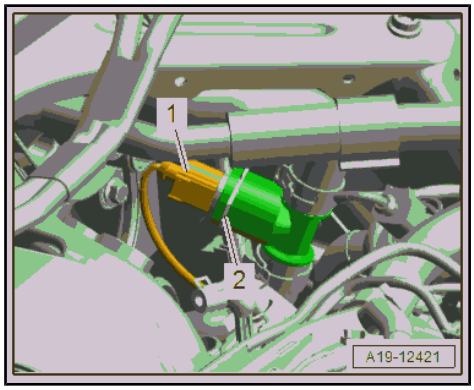

– Disconnect the connector -1-.
– Place a cloth underneath to catch any escaping coolant.
– Remove the clamp -2- and the Thermal Management Coolant Temperature Sensor 8 - G968- .

Continuation for Both Engine Coolant Temperature Sensors:

• Replace the O-ring after removing.
– To prevent coolant loss, install the new coolant temperature sensor immediately.

Further installation is performed in reverse order of removal, while noting the following:

– Install the air filter upper section. Refer to ⇒ “3.2 Air Filter Housing, Removing and Installing”, page 229 .
– Fill with coolant. Refer to ⇒ “1.3.2 Coolant, Draining and Filling, Vehicle with High-Voltage System, Engine Coolant Circuit”, page 143 .

2.12.6 Thermal Management Coolant Temperature Sensor 7 - G908- , Removing and Installing

Procedure

• The engine is cold.
– To reduce the residual pressure in the cooling system, open the coolant expansion tank cap -1- by releasing the catch in direction of -arrow-.

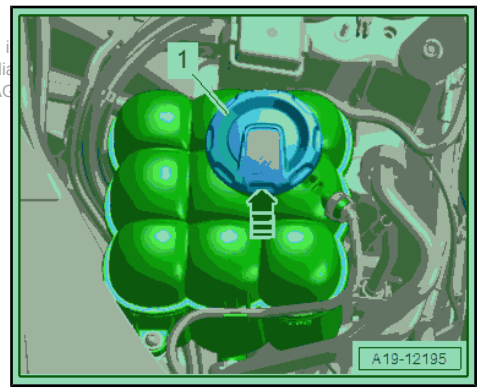

– Remove the front noise insulation. Refer to ⇒ Body Exterior; Rep. Gr. 66 ; Noise Insulation; Noise Insulation, Removing and Installing .

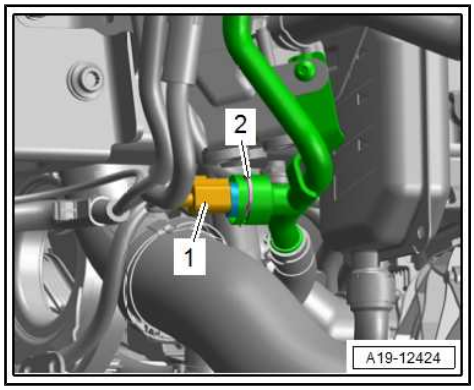

– Disconnect the connector -1-.
– Place a cloth underneath to catch any escaping coolant.
– Remove the clamp -2- and remove the engine coolant temperature sensor.
• Replace the O-ring after removing.
– To prevent coolant loss, install the new coolant temperature sensor immediately.

Further installation is performed in reverse order of removal, while noting the following:

– Fill with coolant. Refer to ⇒ “1.3.2 Coolant, Draining and Filling, Vehicle with High-Voltage System, Engine Coolant Circuit”, page 143 .

Tightening Specifications

◆ Refer to ⇒ Body Exterior; Rep. Gr. 66 ; Noise Insulation; Overview - Noise Insulation .

cardiagn.com

2.12.7 High-Voltage Battery Coolant Temperature Sensors 1 and 2 -G898- / -G899- , Removing and Installing

Procedure

- The engine is cold.

– To remove the residual pressure in the cooling system, open the coolant expansion tank cap -arrow-.

– Open the front cover in the luggage compartment floor and remove the tool kit.

– Disconnect the connectors:

1 - For the High-Voltage Battery Coolant Temperature Sensor 1 - G898-

4 - For the High-Voltage Battery Coolant Temperature Sensor 2 - G899-

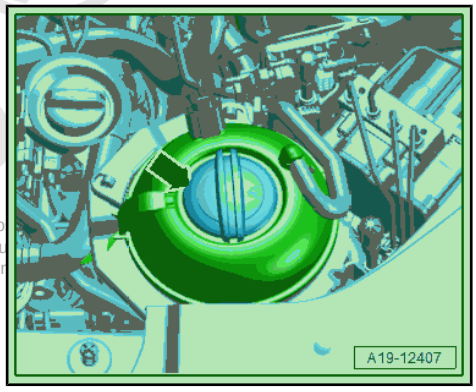

– Place a cloth underneath to catch any escaping coolant.

– Remove the bolt -2 or 3- and remove the corresponding engine coolant temperature sensor.

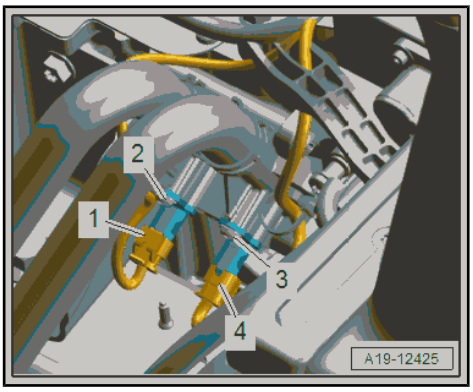

- Replace the O-ring after removing.

– To prevent coolant loss, install the new coolant temperature sensor immediately.

Further installation is performed in reverse order of removal, while noting the following:

– Fill with coolant. Refer to ⇒ “1.3.2 Coolant, Draining and Filling, Vehicle with High-Voltage System, Engine Coolant Circuit”, page 143 .

Tightening Specifications

♦ Refer to ⇒ “3.1 Overview - High-Voltage Battery”, page 308

2.13 Coolant Valves, Removing and Installing

⇒ “2.13.1 Coolant Shut-Off Valve, Removing and Installing”, page 173

⇒ “2.13.2 Transmission Fluid Cooling Valve N509 , Removing and Installing”, page 174

⇒ “2.13.3 Coolant Change-Over Valve 1 N632 , Removing and Installing, Vehicles with High-Voltage System”, page 175

⇒ “2.13.4 Coolant Change-Over Valve 2 N633 , Removing and Installing, Vehicles with High-Voltage System”, page 176

⇒ “2.13.5 Coolant Change-Over Valve 4 N635 , Removing and Installing, Vehicles with High-Voltage System”, page 177

⇒ “2.13.6 Coolant Shut-Off Valve 2 N645 , Removing and Installing, Vehicles with High-Voltage System”, page 178

2.13.1 Coolant Shut-Off Valve, Removing and Installing

Special tools and workshop equipment required

♦ Hose Clip Pliers - VAS6362-

Protected by copyright. Copying for private or commercial purpo
permitted unless authorised by AUDI AG. AUDI AG does not gu
with respect to the correctness of information in this documen

cardiagn.com

Removing

– Versions without an auxiliary radiator: remove the EGR cooler. Refer to ⇒ Servicing – 6-Cylinder TDI Common Rail Engine; Rep. Gr. 26 ; EGR System; EGR Cooler, Removing and Installing .

– Versions with an auxiliary radiator: Remove the EGR auxiliary cooler. Refer to ⇒ Servicing – 6-Cylinder TDI Common Rail Engine; Rep. Gr. 26 ; EGR System; EGR Cooler, Removing and Installing .

– Remove the vacuum hose -2-.

– Remove the bolts -arrows- and remove the shut-off valve -3-.

– Loosen the hose clamp -1- and remove the coolant hose.

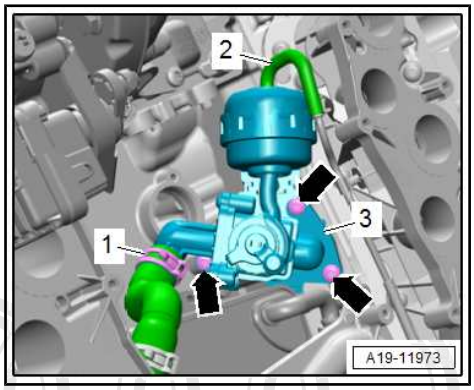

Installing

Install in reverse order of removal and note the following:

- Replace the seal after removal.
- Secure all hose connections with hose clamps that match the ones used in series production. Refer to the Parts Catalog.

– Install the EGR cooler or EGR auxiliary cooler. Refer to ⇒ Servicing – 6-Cylinder TDI Common Rail Engine; Rep. Gr. 26 ; EGR System; EGR Cooler, Removing and Installing .

Tightening Specifications

♦ Refer to ⇒ “2.3 Overview - Coolant Thermostat”, page 155

2.13.2 Transmission Fluid Cooling Valve - N509- , Removing and Installing

Special tools and workshop equipment required

♦ Hose Clamps - Up To 25mm - 3094-

♦ Hose Clip Pliers - VAS6340-

♦ Hose Clip Pliers - VAS6362-

Protected by copyright. Copying for private or commercial purposes, in part or in whole, is not permitted unless authorised by AUDI AG. AUDI AG does not guarantee or accept any liability with respect to the correctness of information in this document. Copyright by AUDI AG.

cardiagn.com

Procedure

– Remove the rear and left noise insulation. Refer to ⇒ Body Exterior; Rep. Gr. 66 ; Noise Insulation; Noise Insulation, Removing and Installing .

– Disconnect the connector -2-.

– Loosen the hose clamps -1-, then clamp off the coolant hoses with the -3094- and then remove them.

– Remove the bolts -arrows- and then remove the Transmission Fluid Cooling Valve - N509- .

– To prevent coolant loss, immediately insert the new Transmission Fluid Cooling Valve - N509- .

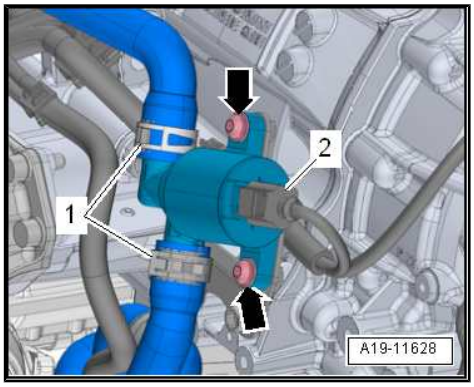

Further installation is performed in reverse order of removal, while noting the following:

• Secure all hose connections with hose clamps that match the ones used in series production. Refer to the Parts Catalog.

– Check the coolant level. Refer to ⇒ “1.3 Coolant, Draining and Filling”, page 140 .

Tightening Specifications

♦ Refer to ⇒ Body Exterior; Rep. Gr. 66 ; Noise Insulation; Overview - Noise Insulation .

2.13.3 Coolant Change-Over Valve 1 - N632- , Removing and Installing, Vehicles with High-Voltage System

Special tools and workshop equipment required

♦ Hose Clip Pliers - VAS6362-

♦ Hose Clip Pliers - VAS6340-

Removing

– Drain the coolant in the high-voltage system coolant circuit. Refer to ⇒ “1.3.2 Coolant, Draining and Filling, Vehicle with High-Voltage System, Engine Coolant Circuit”, page 143 .

– Remove the subframe crossbrace. Refer to ⇒ Suspension, Wheels, Steering; Rep. Gr. 40 ; Subframe; Subframe Crossbrace, Removing and Installing .

– Remove the steering intermediate shaft from the steering gear and push together. Refer to ⇒ Suspension, Wheels, Steering; Rep. Gr. 48 ; Steering Column; Steering Intermediate Shaft, Removing and Installing .

Protected by copyright. Copying for private or commercial purposes, in part or in whole, is not permitted unless authorised by AUDI AG. AUDI AG does not guarantee or accept any liability with respect to the correctness of information in this document. Copyright by AUDI AG.

cardiagn.com

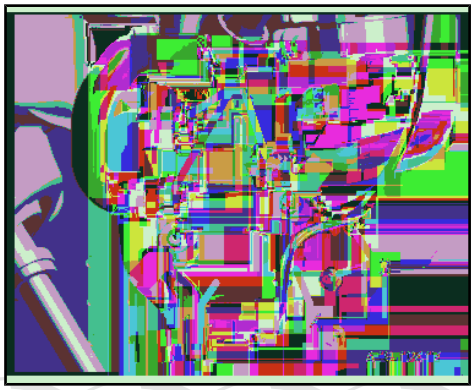

– Disconnect the connector -4-.
– Remove the nuts -3-.
– Place a cloth underneath to catch any escaping coolant.
– Loosen the hose clamps -2-, disconnect and free up the coolant hoses.
– Remove the Coolant Change-Over Valve 1 - N632- -1-.
– If the coolant valve is removed from the bracket, remove the nuts -arrows-.

Installing

Install in reverse order of removal and note the following:

- Secure all hose connections with hose clamps that match the ones used in series production. Refer to the Parts Catalog.
- Used coolant cannot be used again.

– Attach the steering intermediate shaft to the steering gear. Refer to ⇒ Suspension, Wheels, Steering; Rep. Gr. 48 ; Steering Column; Steering Intermediate Shaft, Removing and Installing .
– Fill with coolant. Refer to ⇒ “1.3.2 Coolant, Draining and Filling, Vehicle with High-Voltage System, Engine Coolant Circuit”, page 143 .

Tightening Specifications

♦ Refer to ⇒ “2.4 Overview - Coolant Valve”, page 158
♦ Refer to ⇒ Suspension, Wheels, Steering; Rep. Gr. 40 ; Subframe; Overview - Subframe .

2.13.4 Coolant Change-Over Valve 2 - N633- , Removing and Installing, Vehicles with High-Voltage System

Special tools and workshop equipment required

♦ Hose Clamps - Up To 25mm - 3094-
♦ Hose Clip Pliers - VAS6340-
♦ Hose Clip Pliers - VAS6362-

Removing

– Remove the left engine cover. Refer to ⇒ “3.1 Engine Cover, Removing and Installing”, page 77 .
– Remove the left front section of the wheel housing liner. Refer to ⇒ Body Exterior; Rep. Gr. 66 ; Wheel Housing Liner; Front Wheel Housing Liner, Removing and Installing .

Protected by copyright. Copying for private or commercial purposes, in part or in whole, is not permitted unless authorised by AUDI AG. AUDI AG does not guarantee or accept any liability with respect to the correctness of information in this document. Copyright by AUDI AG.

cardiagn.com

– Disconnect the connector -3-.

– Remove the nuts -1-, free up the bracket -2- and push slightly to the side.

– Clamp off the coolant hoses -4- with the -3094- and remove.

– Remove the nuts -arrows- and remove the Coolant Change-Over Valve 2 - N633- .

Installing

Install in reverse order of removal and note the following:

- Secure all hose connections with hose clamps that match the ones used in series production. Refer to the Parts Catalog.
- Used coolant cannot be used again.

– Install the engine cover. Refer to
⇒ “3.1 Engine Cover, Removing and Installing”, page 77 .

– Fill with coolant. Refer to
⇒ “1.3.2 Coolant, Draining and Filling, Vehicle with High-Voltage System, Engine Coolant Circuit”, page 143 .

Tightening Specifications

♦ Refer to ⇒ “2.4 Overview - Coolant Valve”, page 158

♦ Refer to ⇒ Body Exterior; Rep. Gr. 66 ; Wheel Housing Liner; Overview - Front Wheel Housing Liner .

2.13.5 Coolant Change-Over Valve 4 - N635- , Removing and Installing, Vehicles with High-Voltage System

Special tools and workshop equipment required

♦ Hose Clamps - Up To 25mm - 3094-

♦ Hose Clip Pliers - VAS6362-

Removing

– Clamp off the coolant hoses -1- with -3094- .

– Remove the nuts -arrows-.

– Place a cloth underneath to catch any escaping coolant.

– Loosen the hose clamp -3- and remove the coolant hose.

– Push the coolant pipe -2- slightly to the side.

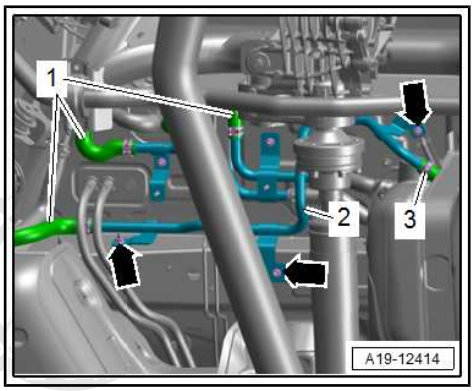

cardiagn.com

Protected by copyright. Copying for private or commercial purposes, in part or in whole, is not permitted unless authorised by AUDI AG. AUDI AG does not guarantee or accept any liability with respect to the correctness of information in this document. Copyright by AUDI AG.

– Remove the securing elements -arrows- and push the heat shield -1- slightly to the left side.

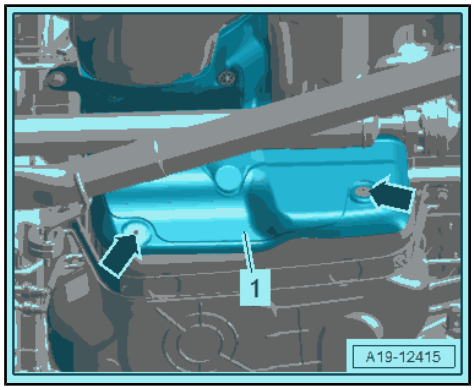

Protected by copyright. Copying for private or commercial purposes, in part or in whole, is not permitted without the prior written consent of AUDI AG. AUDI AG does not guarantee or accept any liability with respect to the correctness of information in this document. Copyright by AUDI AG.

– Disconnect the connector -3-.

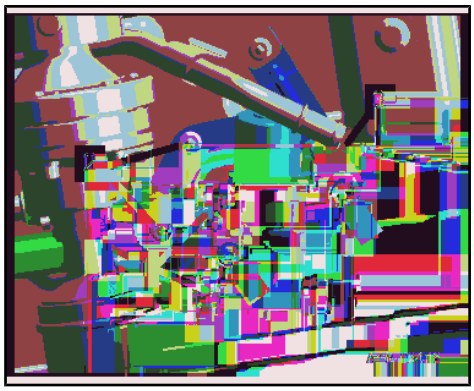

– Remove the nuts -2-.
– Place a cloth underneath to catch any escaping coolant.
– Loosen the hose clamps -1-, remove the coolant hoses and remove the Coolant Change-Over Valve 4 - N635- with the bracket.
– If the coolant valve is removed from the bracket, remove the bolts -arrows-.

Installing

Install in reverse order of removal and note the following:

- Secure all hose connections with hose clamps that match the ones used in series production. Refer to the Parts Catalog.
- Used coolant cannot be used again.

– Fill with coolant. Refer to ⇒ “1.3.2 Coolant, Draining and Filling, Vehicle with High-Voltage System, Engine Coolant Circuit”, page 143 .

Tightening Specifications

♦ Refer to ⇒ “2.4 Overview - Coolant Valve”, page 158

2.13.6 Coolant Shut-Off Valve 2 - N645- , Removing and Installing, Vehicles with High-Voltage System

Special tools and workshop equipment required

♦ Hose Clamps - Up To 25mm - 3094-
♦ Hose Clip Pliers - VAS6362-

Removing

– Remove the left front rear section of the wheel housing liner. Refer to ⇒ Body Exterior; Rep. Gr. 66 ; Wheel Housing Liner; Front Wheel Housing Liner, Removing and Installing .

cardiagn.com

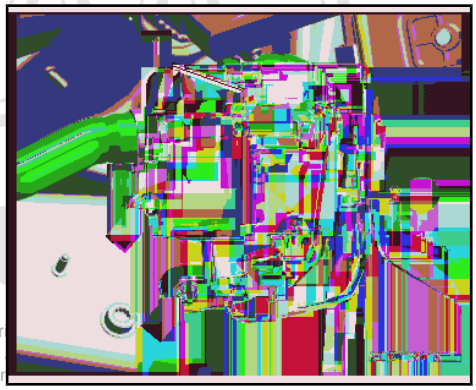

– Disconnect the connector -3-.
– Remove the bolts -arrows- and remove the bracket -2-.
– Place a cloth underneath to catch any escaping coolant.
– Loosen the hose clamps -1-, then clamp off the coolant hoses with the -3094- and then remove them.
– Remove the Coolant Shut-Off Valve 2 - N645- .

Installing

Install in reverse order of removal and note the following:

Protected by copyright. Copying for pri
permitted unless authorised by AUDI
with respect to the correctness of in

- Secure all hose connections with hose clamps that match the ones used in series production. Refer to the Parts Catalog.
- Used coolant cannot be used again.

– Fill with coolant. Refer to
⇒ “1.3.2 Coolant, Draining and Filling, Vehicle with High-Voltage System, Engine Coolant Circuit”, page 143 .

Tightening Specifications

♦ Refer to ⇒ “2.4 Overview - Coolant Valve”, page 158
♦ Refer to ⇒ Body Exterior; Rep. Gr. 66 ; Wheel Housing Liner; Overview - Front Wheel Housing Liner .

cardiagn.com

3 Coolant Pipes

⇒ “3.1 Overview - Coolant Pipes”, page 180

⇒ “3.2 Coolant Pipes, Removing and Installing”, page 182

3.1 Overview - Coolant Pipes

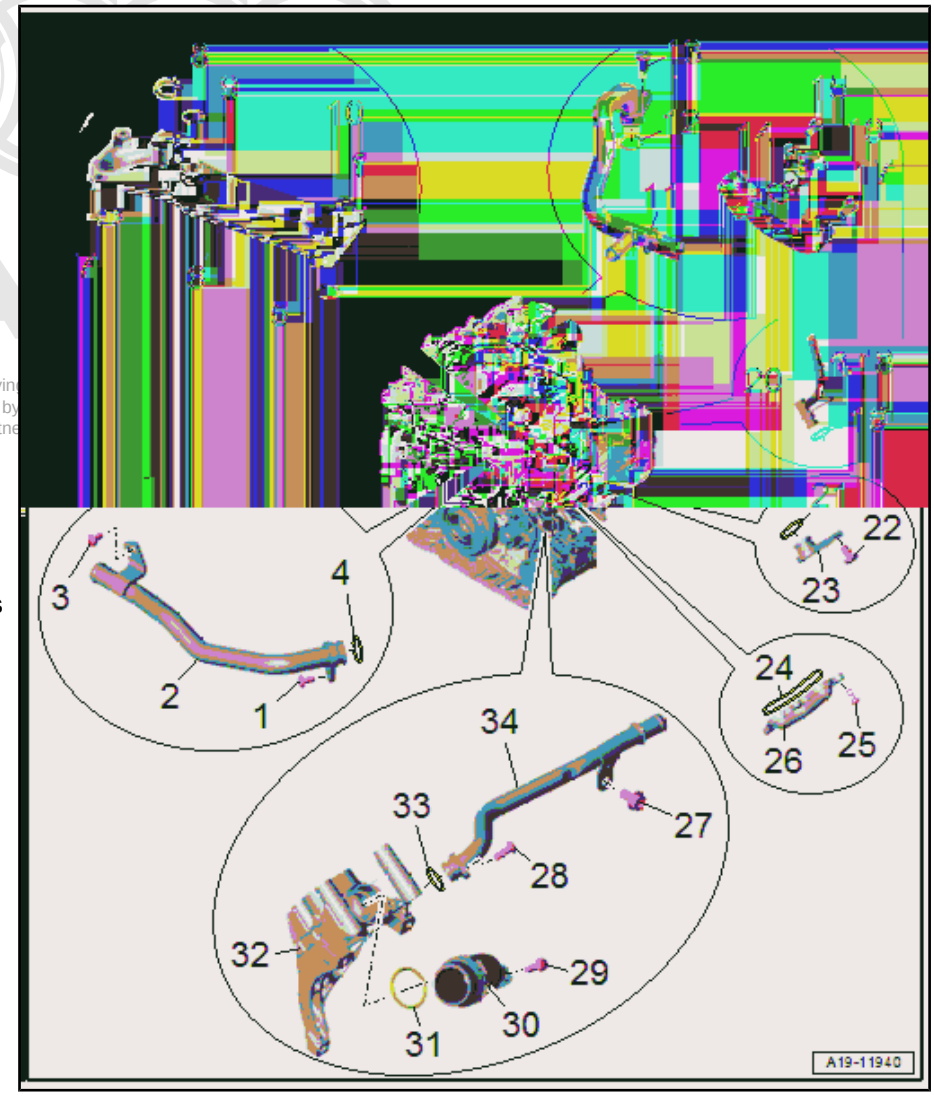

1 - Bolt

- ❑ 9 Nm

2 - Front Coolant Pipe

- ❑ Removing and installing. Refer to ⇒ “3.2.2 Front Coolant Pipe, Removing and Installing”, page 183 .

3 - Bolt

- ❑ 9 Nm

4 - O-Ring

- ❑ Replace after removing

5 - O-Ring

- ❑ Replace after removing

6 - Upper Coolant Pipe

- ❑ There are different versions. Refer to the Parts Catalog.
- ❑ Removing and installing. Refer to ⇒ “3.2.1 Upper Coolant Pipe, Removing and Installing”, page 182 .

7 - Seal

- ❑ Replace after removing

8 - Seal

- ❑ For versions with EGR auxiliary cooler
- ❑ Replace after removing

9 - O-Ring

- ❑ Replace after removing

10 - Bolt

- ❑ 9 Nm

11 - Front Coolant Pipe for Turbocharger

- ❑ There are different versions. Refer to the Parts Catalog.
- ❑ Removing and installing. Refer to ⇒ “3.2.4 Front Coolant Pipe for Turbocharger, Removing and Installing”, page 185 .

12 - O-Ring

- ❑ Replace after removing

13 - Bolt

- ❑ 9 Nm

14 - O-Ring

- ❑ Replace after removing

Protected by copyright. Copying permitted unless authorised by with respect to the correctne

cardiagn.com

15 - Bolt

- ❑ 9 Nm

16 - Rear Coolant Pipe for Turbocharger

- ❑ The illustration does not show the version in the vehicle.
- ❑ Removing and installing. Refer to ⇒ “3.2.5 Rear Coolant Pipe for Turbocharger, Removing and Installing”, page 186 .

17 - Bolt

- ❑ 9 Nm

18 - Bolt

- ❑ 9 Nm

19 - O-Ring

- ❑ Replace after removing

20 - Coolant Line

- ❑ For cylinder head

21 - O-Ring

- ❑ Replace after removing

22 - Bolt

- ❑ 9 Nm

23 - Plugs

- ❑ For cylinder block

24 - Seal

- ❑ Replace after removing

25 - Bolt

- ❑ 9 Nm

26 - Housing Cover

- ❑ For cylinder block

Protected by copyright. Copying for private or commercial purposes, in part or in whole, is not permitted unless authorised by AUDI AG. AUDI AG does not guarantee or accept any liability with respect to the correctness of information in this document. Copyright by AUDI AG.

27 - Bolt

- ❑ 9 Nm

28 - Bolt

- ❑ 9 Nm

29 - Bolt

- ❑ 9 Nm

30 - Connection

- ❑ For coolant hose

31 - O-Ring

- ❑ Replace after removing

32 - Bracket

- ❑ For the A/C compressor
- ❑ Removing and installing. Refer to ⇒ “1.6.1 A/C Compressor Bracket, Removing and Installing”, page 94 .

33 - O-Ring

- ❑ Replace after removing

34 - Left Coolant Pipe

- ❑ Removing and installing. Refer to ⇒ “3.2.3 Left Coolant Pipe, Removing and Installing”, page 184 .

cardiagn.com

Right Coolant Pipe - Tightening Specification

– Tighten the nuts -arrows- to 9 Nm.

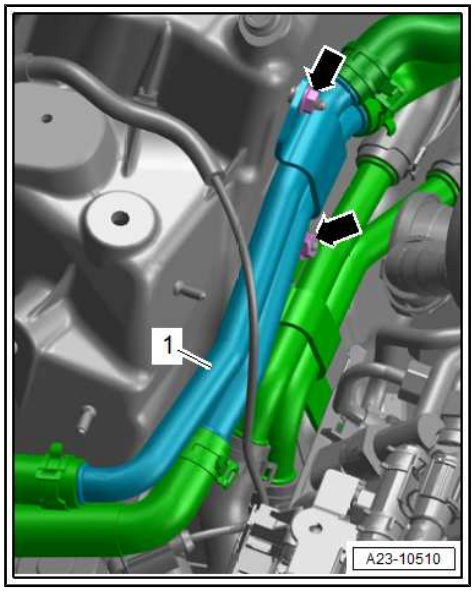

Coolant Expansion Tank - Tightening Specification

– Tighten the screw -1- to 2.5 Nm.

– Tighten the bolt -4- to 9 Nm.

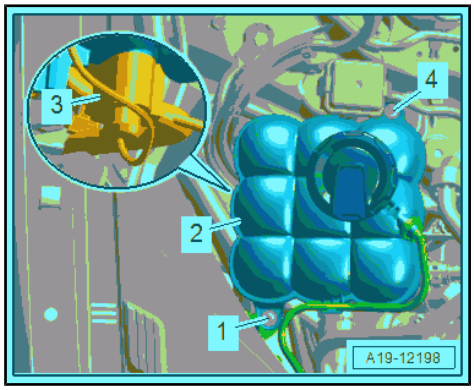

3.2 Coolant Pipes, Removing and Installing

⇒ “3.2.1 Upper Coolant Pipe, Removing and Installing”, page 182

⇒ “3.2.2 Front Coolant Pipe, Removing and Installing”, page 183

⇒ “3.2.3 Left Coolant Pipe, Removing and Installing”, page 184

⇒ “3.2.4 Front Coolant Pipe for Turbocharger, Removing and Installing”, page 185

⇒ “3.2.5 Rear Coolant Pipe for Turbocharger, Removing and Installing”, page 186

3.2.1 Upper Coolant Pipe, Removing and Installing

Removing

Protected by copyright. Copying for private or commercial purposes, in part or in whole, is not permitted unless authorised by AUDI AG. AUDI AG does not guarantee or accept any liability with respect to the correctness of information in this document. Copyright by AUDI AG.

– Versions without an auxiliary radiator: remove the EGR cooler. Refer to ⇒ Servicing – 6-Cylinder TDI Common Rail Engine; Rep. Gr. 26 ; EGR System; EGR Cooler, Removing and Installing .

– Versions with an auxiliary radiator: Remove the EGR auxiliary cooler. Refer to ⇒ Servicing – 6-Cylinder TDI Common Rail Engine; Rep. Gr. 26 ; EGR System; EGR Cooler, Removing and Installing .

cardiagn.com

– Remove the bolts -arrows- and remove the upper coolant pipe -1-.

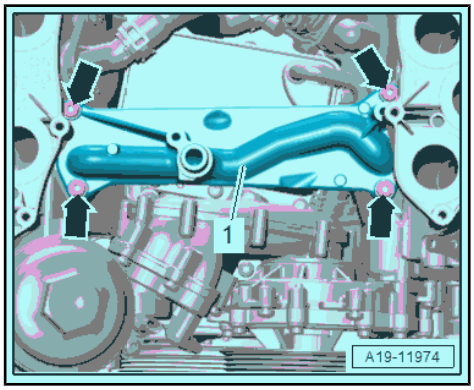

Installing

Install in reverse order of removal and note the following:

- Replace the gasket and O-ring after removal.
- Clean and/or smooth the sealing surfaces of the O-rings.
- Coat the O-ring with coolant and slide it onto the coolant pipe.
- Install the EGR cooler or EGR auxiliary cooler. Refer to ⇒ Servicing – 6-Cylinder TDI Common Rail Engine; Rep. Gr. 26 ; EGR System; EGR Cooler, Removing and Installing .

Tightening Specifications

♦ Refer to ⇒ “3.1 Overview - Coolant Pipes”, page 180

3.2.2 Front Coolant Pipe, Removing and Installing

Special tools and workshop equipment required

♦ Hose Clip Pliers - VAS6340-

♦ -VAS5014- or the Shop Crane - Drip Tray - VAS6208-

Removing

– To reduce the residual pressure in the cooling system, open the coolant expansion tank cap -1- by releasing the catch in the direction of -arrow-.

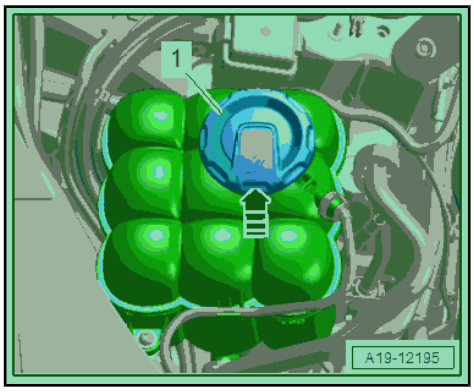

– Free up the fuel hoses -1, 2 and 3- on the right engine cover.

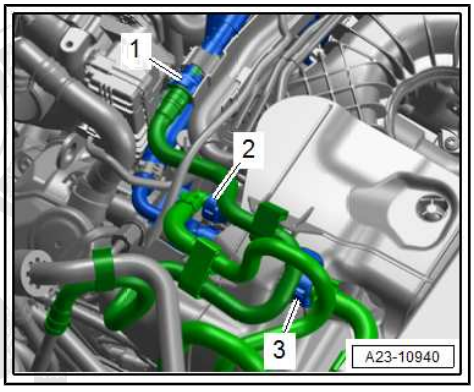

Protected by copyright. Copying for private or commercial purposes, in part or in whole, is not permitted unless authorised by AUDI AG. AUDI AG does not guarantee or accept any liability with respect to the correctness of information in this document. Copyright by AUDI AG.

cardiagn.com

– Remove the right engine cover -1- from the ball pins in the direction of -arrows- and push it slightly to the side.

– Remove the front noise insulation. Refer to ⇒ Body Exterior; Rep. Gr. 66 ; Noise Insulation; Noise Insulation, Removing and Installing .

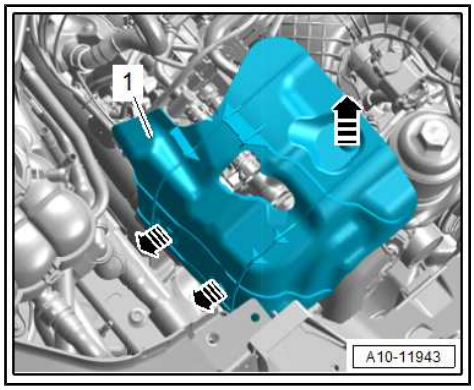

– Place the container of the -VAS5014- or the -VAS6208- underneath.

– Lift the clamp -arrow- and remove the coolant hose from the lower right of the radiator and drain the coolant.

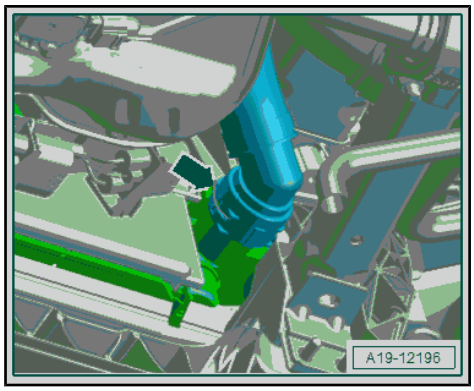

– Loosen the hose clamps -1 and 3- and remove the coolant hoses.

– Remove the bolts -arrows- and the front coolant pipe -2-.

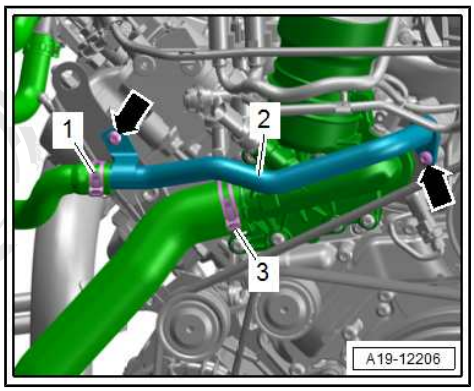

Installing

Install in reverse order of removal and note the following:

- Replace the O-ring after removing.
- Secure all hose connections with hose clamps that match the ones used in series production. Refer to the Parts Catalog.
- Used coolant cannot be used again.

– Clean and/or smooth the sealing surfaces of the O-rings.

– Coat the O-ring with coolant and slide it onto the coolant pipe.

– Install the engine cover. Refer to ⇒ “3.1 Engine Cover, Removing and Installing”, page 77 .

Protected by copyright. Copying for private or commercial purposes, in part or in whole, is not permitted unless authorised by AUDI AG. AUDI AG does not guarantee or accept any liability with respect to the correctness of information in this document. Copyright by AUDI AG.

– Connect the coolant hose to the connector coupling. Refer to ⇒ Fig. ““Connect the Coolant Hose to the Connector Coupling”“ , page 189 .

– Fill with coolant. Refer to ⇒ “1.3 Coolant, Draining and Filling”, page 140 .

Tightening Specifications

♦ Refer to ⇒ “3.1 Overview - Coolant Pipes”, page 180

♦ Refer to ⇒ Body Exterior; Rep. Gr. 66 ; Noise Insulation; Overview - Noise Insulation .

3.2.3 Left Coolant Pipe, Removing and Installing

Special tools and workshop equipment required

♦ Hose Clip Pliers - VAS6362-

cardiagn.com

Removing

– Drain the coolant. Refer to ⇒ “1.3 Coolant, Draining and Filling”, page 140 .

– Remove the noise insulation. Refer to ⇒ Body Exterior; Rep. Gr. 66 ; Noise Insulation; Noise Insulation, Removing and Installing .

Vehicles without High-Voltage System

– Remove the A/C compressor from the bracket and push it toward the front. Refer to ⇒ Heating, Ventilation and Air Conditioning; Rep. Gr. 87 ; A/C Compressor; A/C Compressor, Removing and Installing on Bracket .

Vehicles with High-Voltage System

– Remove the A/C compressor. Refer to ⇒ Heating, Ventilation and Air Conditioning; Rep. Gr. 87 ; A/C Compressor; A/C Compressor, Removing and Installing .

– Remove the coolant hose from the coolant pipe by loosening the hose clamp -2-.

– Remove the bolts -arrows-.

– Remove the left coolant pipe -1-. (shown with the engine support removed)

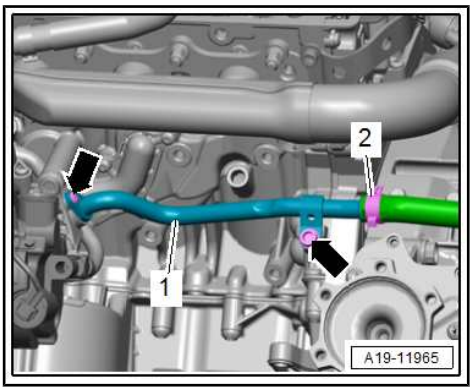

Protected by copyright. Copying for private or commercial purposes, in part or in whole, is not permitted unless authorised by AUDI AG. AUDI AG does not guarantee or accept any liability with respect to the accuracy of the information.

Installing

Install in reverse order of removal and note the following:

- Secure all hose connections with hose clamps that match the ones used in series production. Refer to the Parts Catalog.
- Used coolant cannot be used again.

– Fill with coolant. Refer to ⇒ “1.3 Coolant, Draining and Filling”, page 140 .

Tightening Specifications

♦ Refer to ⇒ “3.1 Overview - Coolant Pipes”, page 180

♦ Refer to ⇒ Heating, Ventilation and Air Conditioning; Rep. Gr. 87 ; A/C Compressor; Overview - A/C Compressor Power Unit .

♦ Refer to ⇒ Body Exterior; Rep. Gr. 66 ; Noise Insulation; Overview - Noise Insulation .

3.2.4 Front Coolant Pipe for Turbocharger, Removing and Installing

Special tools and workshop equipment required

♦ Hose Clamps - Up To 25mm - 3094-

♦ Hose Clip Pliers - VAS6362-

♦ Engine Bung Set - VAS6122-

Removing

– Remove the air filter housing. Refer to ⇒ “3.2 Air Filter Housing, Removing and Installing”, page 229 .

cardiagn.com

Versions without EGR Auxiliary Cooler

– Clamp off the coolant hose -arrow- with the -3094- .

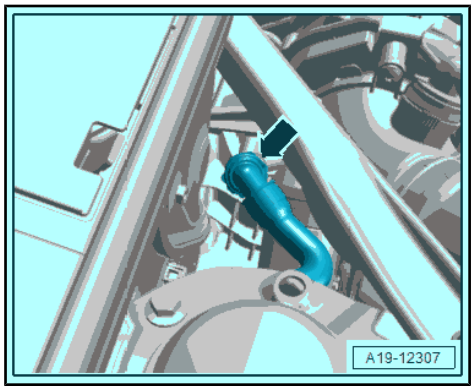

– Clamp off the coolant hose using the -3094- .
– Remove the bolt -2- and remove the coolant pipe -1- from the turbocharger.
– Always seal off any open connections with plugs that are thoroughly cleaned from the -VAS6122- .
– Loosen the hose clamp -3- and remove the coolant hose.

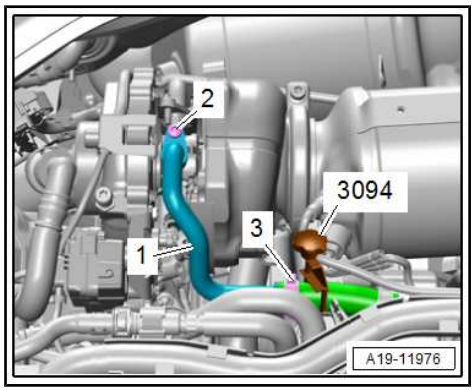

Versions with EGR Auxiliary Cooler

– Drain the coolant. Refer to ⇒ “1.3 Coolant, Draining and Filling”, page 140 .
– Remove the bolt -2- and remove the coolant pipe -1- from the turbocharger.
– Always seal off any open connections with plugs that are thoroughly cleaned from the -VAS6122- .
– Loosen the clamps -3- and remove the coolant hoses.

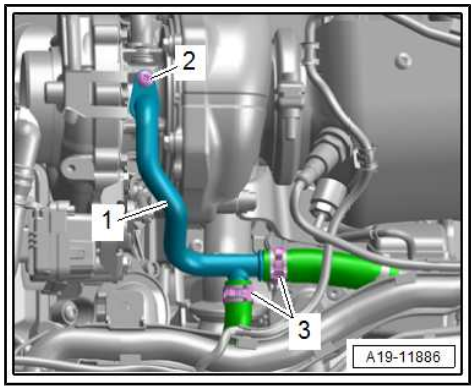

Installing

Install in reverse order of removal and note the following:

- Replace the O-ring after removing.
- Secure all hose connections with hose clamps that match the ones used in series production. Refer to the Parts Catalog.
- Used coolant cannot be used again.

– Install the air filter housing. Refer to ⇒ “3.2 Air Filter Housing, Removing and Installing”, page 229 .
– Check the coolant level and Fill with coolant. Refer to ⇒ “1.3 Coolant, Draining and Filling”, page 140 .

Tightening Specifications

♦ Refer to ⇒ “3.1 Overview - Coolant Pipes”, page 180

3.2.5 Rear Coolant Pipe for Turbocharger, Removing and Installing

Special tools and workshop equipment required

♦ Hose Clamps - Up To 25mm - 3094-

Protected by copyright. Copying for private or commercial purposes, in part or in whole, is not permitted unless authorised by AUDI AG. AUDI AG does not guarantee or accept any liability with respect to the correctness of information in this document. Copyright by AUDI AG.

cardiagn.com

Removing

– Remove the emissions control module. Refer to ⇒ “2.2 Emissions Control Module, Removing and Installing”, page 268 .

Versions without EGR Auxiliary Cooler

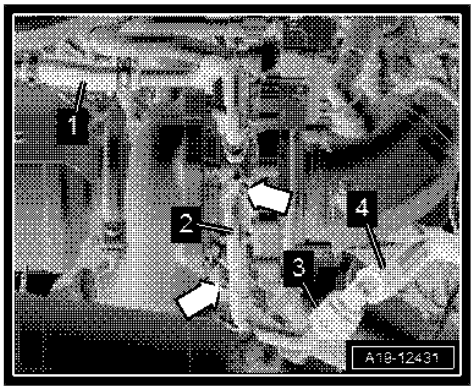

– Clamp off the coolant hose -1- with -3094- .

– Place a cloth underneath to catch any escaping coolant.

– Clamp off the coolant hose -4- with the -3094- and remove to do so lift up the clip -3-.

– Remove the bolts -arrows- and then remove the coolant pipe -2-.

Versions with EGR Auxiliary Cooler

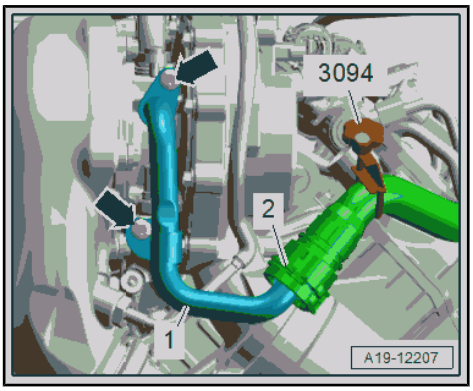

– Drain the coolant. Refer to ⇒ “1.3 Coolant, Draining and Filling”, page 140 .

– Lift the clamp -2- and remove the coolant hose.

– Remove the bolts -arrows- and remove the coolant pipe -1- from the turbocharger.

Installing

Install in reverse order of removal and note the following:

- Replace the O-ring after removing.
- Used coolant cannot be used again.

– Install the emissions control module. Refer to ⇒ “2.2 Emissions Control Module, Removing and Installing”, page 268 .

– Connect the coolant hose to the connector coupling. Refer to ⇒ Fig. ““Connect the Coolant Hose to the Connector Coupling”“ , page 189 .

– Check the coolant level and Fill with coolant. Refer to ⇒ “1.3 Coolant, Draining and Filling”, page 140 .

Tightening Specifications

◆ Refer to ⇒ “3.1 Overview - Coolant Pipes”, page 180

Protected by copyright. Copying for private or commercial purposes, in part or in whole, is not permitted unless authorised by AUDI AG. AUDI AG does not guarantee or accept any liability with respect to the correctness of information in this document. Copyright by AUDI AG.

cardiagn.com

4 Radiator/Radiator Fan

⇒ “4.1 Overview - Radiator/Radiator Fan”, page 188

⇒ “4.2 Radiator, Removing and Installing”, page 191

⇒ “4.3 Fan Shroud, Removing and Installing”, page 195

⇒ “4.4 Radiator Fan, Removing and Installing”, page 199

⇒ “4.5 Radiator Shutter, Removing and Installing”, page 199

⇒ “4.6 Radiator Shutter Motor, Removing and Installing”, page 201

⇒ “4.7 Radiator for High-Voltage System Coolant Circuit, Removing and Installing”, page 202

4.1 Overview - Radiator/Radiator Fan

Radiator

Protected by copyright. Copying for private or commercial purposes, in part or in whole, is not permi
wit

1 - Coolant Hose

- ❑ Lift the clamp to remove
- ❑ Connecting. Refer to ⇒ Fig. ““Connect the Coolant Hose to the Connector Coupling”“ , page 189 .

2 - Radiator

- ❑ Removing and installing. Refer to ⇒ “4.2 Radiator, Removing and Installing”, page 191 .

3 - O-Ring

- ❑ Replace after removing

4 - Plugs

- ❑ Lift the clamp to remove
- ❑ Connecting. Refer to ⇒ Fig. ““Connect the Coolant Hose to the Connector Coupling”“ , page 189 .

5 - O-Ring

- ❑ Replace after removing

6 - Coolant Hose

- ❑ Lift the clamp to remove
- ❑ Connecting. Refer to ⇒ Fig. ““Connect the Coolant Hose to the Connector Coupling”“ , page 189 .

7 - Coolant Hose

- ❑ To the coolant expansion tank
- ❑ To remove, press the release ring
- ❑ Connecting. Refer to ⇒ Fig. ““Connect the Coolant Hose to the Connector Coupling”“ , page 189 .

cardiagn.com

8 - O-Ring

- ❑ Replace after removing

9 - Rubber Bushing

- ❑ For the radiator

10 - Sleeve

11 - Retaining Pin

- ❑ Disengage and remove using the screwdriver

12 - Coolant Hose

- ❑ For vehicles with high-voltage system

13 - Radiator for High-Voltage System Coolant Circuit

- ❑ For vehicles with high-voltage system
- ❑ Removing and installing. Refer to
  ⇒ “4.7 Radiator for High-Voltage System Coolant Circuit, Removing and Installing”, page 202 .

14 - Coolant Hose

- ❑ For vehicles with high-voltage system

15 - Upper Air Duct

- ❑ There are different versions. Refer to the Parts Catalog.

16 - Side Air Duct

- ❑ There are different versions. Refer to the Parts Catalog.

17 - Rubber Bushing

- ❑ For the radiator

18 - Rubber Buffer

19 - Bolt

- ❑ 14 Nm

20 - O-Ring

- ❑ Replace after removing

Protected by copyright. Copying for private or commercial purposes, in part or in whole, is not permitted unless authorised by AUDI AG. AUDI AG does not guarantee or accept any liability with respect to the correctness of information in this document. Copyright by AUDI AG.

Connect the Coolant Hose to the Connector Coupling

- Replacing the damaged clip -4-.

– Remove the old O-ring -2- in the coolant hose -3-.

– Coat the new O-ring with coolant and insert it in the coolant hose.

– Press the coolant hose onto the connection -1- until it engages audibly.

– Press the coolant hose on again and pull to make sure the connector coupling is engaged correctly.

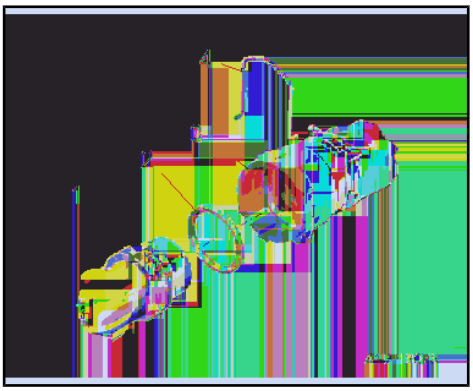

Fan Shroud and Radiator Fan

cardiagn.com

1 - Bolt

- ❑ 5 Nm

2 - Fan Shroud

- ❑ Removing and installing. Refer to ⇒ “4.3 Fan Shroud, Removing and Installing”, page 195 .

3 - Bolt

- ❑ 5 Nm

4 - Radiator Fan - V7-

- ❑ With Radiator Fan Control Module - J293-
- ❑ Removing and installing. Refer to ⇒ “4.4 Radiator Fan, Removing and Installing”, page 199 .

5 - Radiator Fan 2 - V177-

- ❑ With Radiator Fan Control Module 2 - J671-
- ❑ Removing and installing. Refer to ⇒ “4.4 Radiator Fan, Removing and Installing”, page 199 .

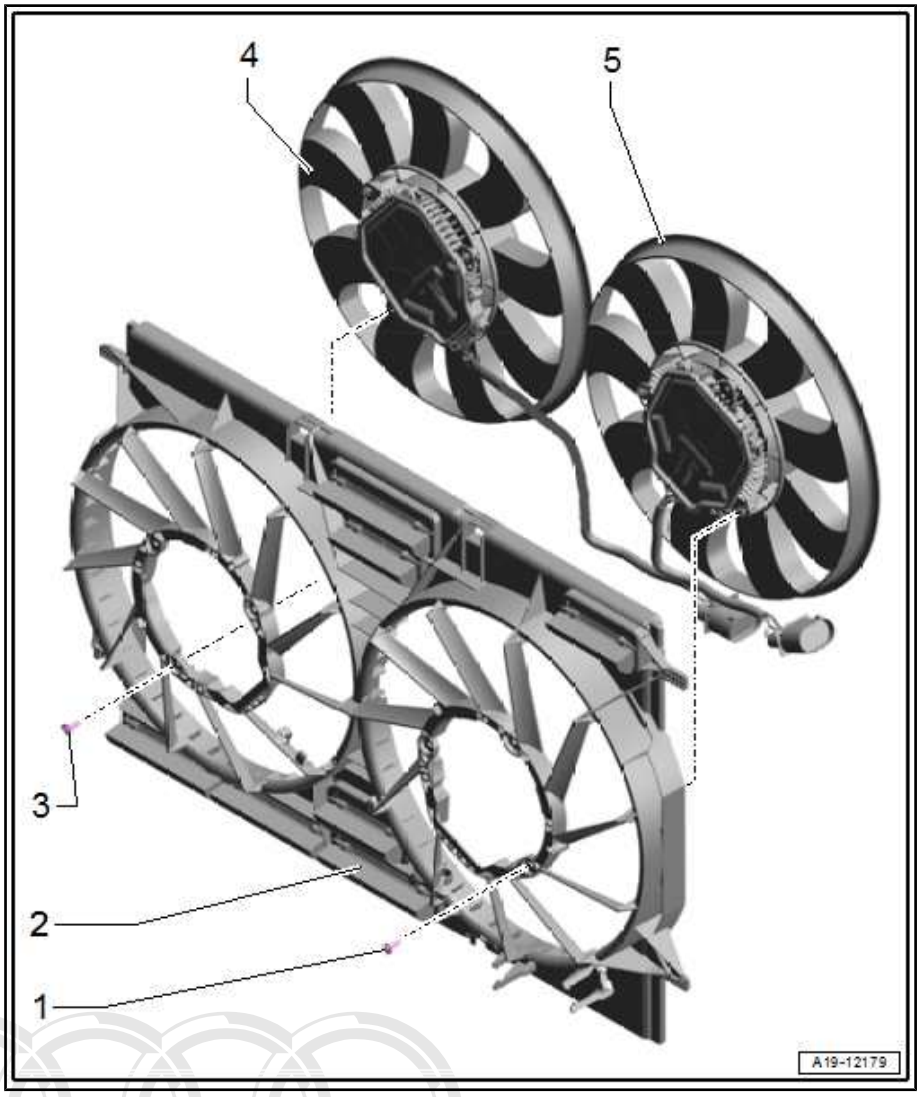

Radiator Shutter

Protected by copyright. Copying for private or commercial purposes, in part or in whole, is not permitted unless authorised by AUDI AG. AUDI AG does not guarantee or accept any liability with respect to the correctness of information in this document. Copyright by AUDI AG.

cardiagn.com

1 - Air Duct

2 - Cover

3 - Radiator Shutter

- ❑ Removing and installing. Refer to ⇒ “4.5 Radiator Shutter, Removing and Installing”, page 199 .

4 - Bolt

- ❑ 8 Nm

5 - Bolt

- ❑ 8 Nm

6 - Slat

7 - Driver

8 - Bracket

9 - Air Duct

10 - Connecting Panel

11 - Radiator Shutter Motor - V544-

- ❑ Removing and installing. Refer to ⇒ “4.6 Radiator Shutter Motor, Removing and Installing”, page 201 .

12 - Bolt

- ❑ 2.5 Nm

13 - Bolt

- ❑ 8 Nm

14 - Air Duct

4.2 Radiator, Removing and Installing

Special tools and workshop equipment required

- ♦ Coolant Collection System - VAS5014- or Shop Crane - Drip Tray - VAS6208-
- ♦ Hose Clip Pliers - VAS6362-
- ♦ Elbow Assembly Tool - T10118-

Removing

– Remove the front noise insulation. Refer to ⇒ Body Exterior; Rep. Gr. 66 ; Noise Insulation; Noise Insulation, Removing and Installing .

– Equipped on some models: remove the radiator shutter. Refer to ⇒ “4.5 Radiator Shutter, Removing and Installing”, page 199 .

– Remove the front impact member. Refer to ⇒ Body Exterior; Rep. Gr. 63 ; Front Bumper; Impact Member, Remove and Installing .

Protected by copyright. Copying for private or commercial purposes, in part or in whole, is not permitted unless authorised by AUDI AG. AUDI AG does not guarantee or accept any liability with respect to the correctness of information in this document. Copyright by AUDI AG.

cardiagn.com

– Place the container of the -VAS5014- or the -VAS6208- underneath.
– Lift the clamp -arrow- and remove the coolant hose from the lower right of the radiator and drain the coolant.

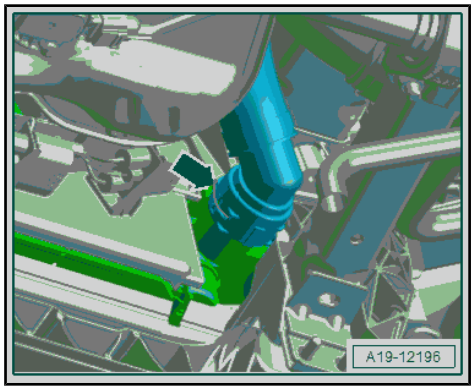

CAUTION

There is a risk of hand injury if the radiator fan turns on by itself.

– Do not reach into the radiator fan when disconnecting the connector.

– Disconnect the connectors -1 and 2- for the radiator fan.

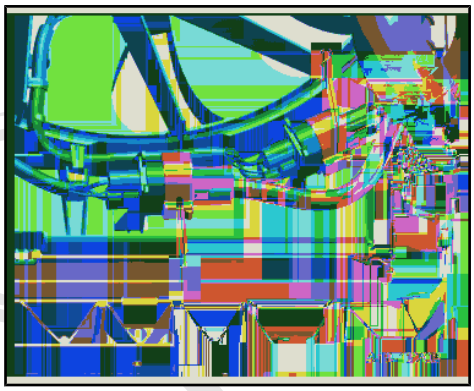

Versions with Side Charge Air Coolers

– Remove the left engine cover. Refer to ⇒ “3.1 Engine Cover, Removing and Installing”, page 77 .

Versions without Radiator Shutter

– Release the left and right catches with the -T10118- in the direction of -arrows- and remove the upper air ducts -1- and side air ducts -2-. (Shown with the radiator removed).

Protected by copyright. Copying f
permitted unless authorised by A
with respect to the correctness

cardiagn.com

Versions with Radiator Shutter

– Release the left and right catches using the -T10118- in the direction of -arrows- and remove the side air guide -1-. (Shown with the radiator removed).

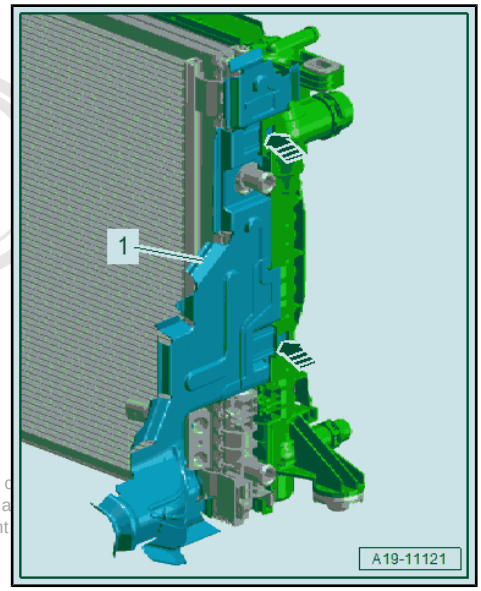

Protected by copyright. Copying for private or commercial purposes, in part c
permitted unless authorised by AUDI AG. AUDI AG does not guarantee or a
with respect to the correctness of information in this document. Copyright

Versions with Side Charge Air Cooler

– Remove the left and right bolts -1-.

– Loosen the hose clamp -2- on the left and right side and remove the lower air duct pipe.

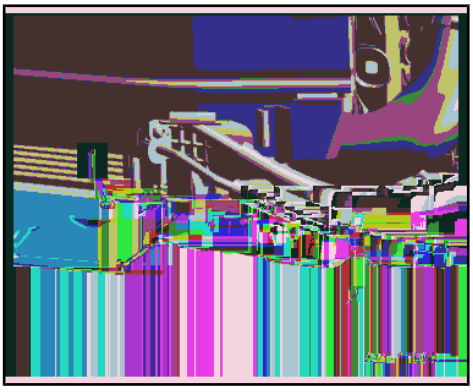

Continuation for All Vehicles

– Disconnect the connector -2- for the High Pressure Sensor -G65- .

NOTICE

Risk of damaging the refrigerant lines and hoses by removing and pivoting the A/C compressor.

– Do not bend, twist or stretch the refrigerant lines and hoses.

– Release the left and right catches in the direction of -arrows- disengage the condenser -1- from the radiator and tie up to the side.

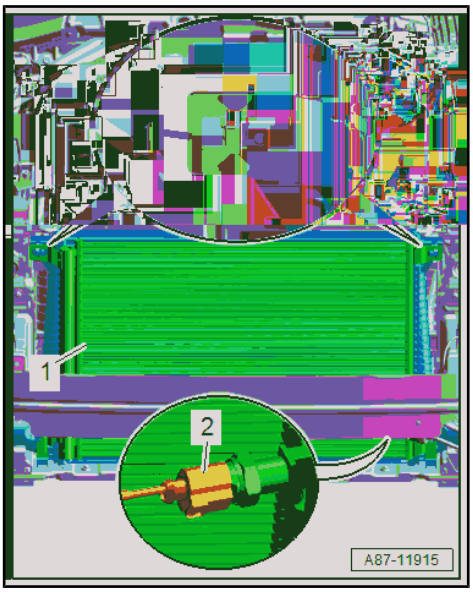

Versions with Charge Air Cooler in Center

– Remove the charge air cooler. Refer to
⇒ “2.3.1 Center Charge Air Cooler, Removing and Installing”, page 212 .

Vehicle with High-Voltage System

– Remove the radiator for the high-voltage system coolant circuit. Refer to
⇒ “4.7 Radiator for High-Voltage System Coolant Circuit, Removing and Installing”, page 202 .

cardiagn.com

Continuation for All Vehicles

– Lift the clips -1 and 2-, remove the coolant connection from the radiator and free it up.

Protected by copyright. Copying for private or com
permitted unless authorised by AUDI AG. AUDI A
with respect to the correctness of information in

– Release the left and right catches in direction of -arrows- and remove the retaining pin -1- for the radiator upward.

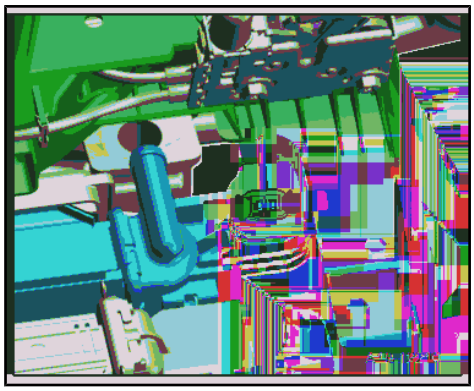

– Remove the bolt -arrow- on the left and right.
– Remove the radiator.

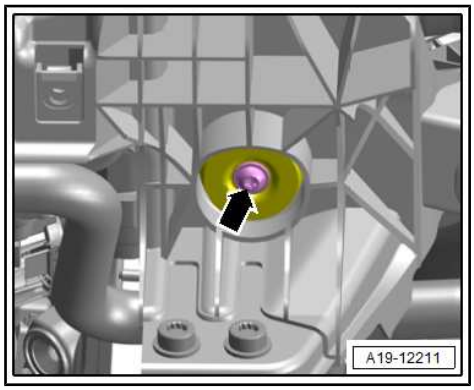

cardiagn.com

– Press the fan shroud left and right locking tabs at the same time in the direction of -arrow- and remove the fan shroud upward from the radiator.

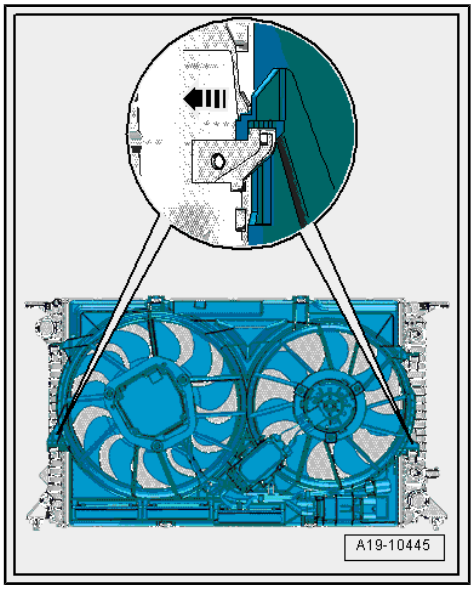

Installing

Install in reverse order of removal and note the following:

- If there are small impressions on the slats. Refer to ⇒ Servicing – 6-Cylinder TDI Common Rail Engine; Rep. Gr. 00 ; Repair Information; Radiator and Condenser Assembly .
- All of the coolant must be changed if the radiator was replaced.
- Used coolant cannot be used again.

– Connect the coolant hose to the connector coupling. Refer to ⇒ Fig. ""Connect the Coolant Hose to the Connector Coupling"" , page 189 .

– Install the engine cover. Refer to ⇒ "3.1 Engine Cover, Removing and Installing", page 77 .

– Fill with coolant. Refer to ⇒ "1.3 Coolant, Draining and Filling", page 140 .

Tightening Specifications

- Refer to ⇒ "4.1 Overview - Radiator/Radiator Fan", page 188
- Refer to ⇒ "2.1 Overview - Charge Air System", page 209
- Refer to ⇒ Body Exterior; Rep. Gr. 63 ; Front Bumper Cover; Overview - Impact Member .
- Refer to ⇒ Body Exterior; Rep. Gr. 66 ; Noise Insulation; Overview - Noise Insulation .

Protected by Copyright. Copying for private or commercial purposes, in part or in whole, is not permitted unless authorised by AUDI AG. AUDI AG does not guarantee or accept any liability with respect to the correctness of information in this document. Copyright by AUDI AG.

4.3 Fan Shroud, Removing and Installing

⇒ "4.3.1 Fan Shroud, Removing and Installing, Vehicle without High-Voltage System", page 195

⇒ "4.3.2 Fan Shroud, Removing and Installing, Vehicle with High-Voltage System", page 197

4.3.1 Fan Shroud, Removing and Installing, Vehicle without High-Voltage System

Special tools and workshop equipment required

- Coolant Collection System - VAS5014- or Shop Crane - Drip Tray - VAS6208-

Removing

– Remove the front noise insulation. Refer to ⇒ Body Exterior; Rep. Gr. 66 ; Noise Insulation; Noise Insulation, Removing and Installing .

cardiagn.com

– Place the container of the -VAS5014- or the -VAS6208- underneath.
– Lift the clamp -arrow- and remove the coolant hose from the lower right of the radiator and drain the coolant.

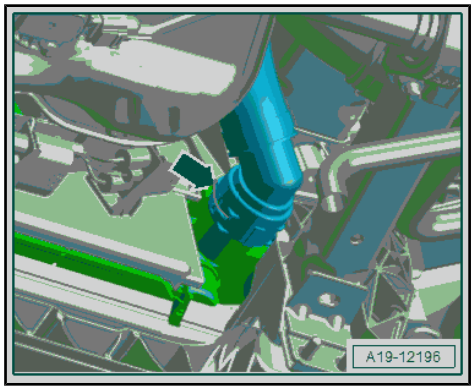

Protected by copyright. Copying for private or commercial purposes, in part or in whole, is not permitted unless authorised by AUDI AG. AUDI AG does not guarantee or accept any liability with respect to the correctness of information in this document. Copyright by AUDI AG.

– Lift the clip -arrow- and remove the plug.
– Remove the left engine cover. Refer to ⇒ “3.1 Engine Cover, Removing and Installing”, page 77 .
– Remove the lock carrier cover. Refer to ⇒ Body Exterior; Rep. Gr. 63 ; Front Bumper .

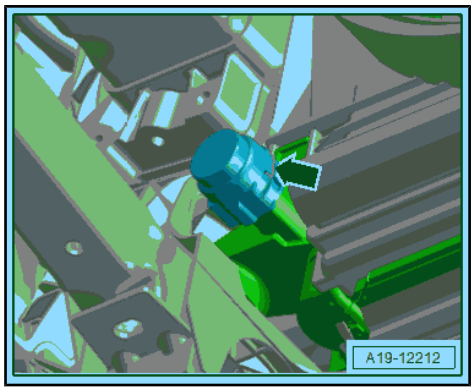

– Lift the clip -2- and remove the connection from the radiator and move to the side
– Free up the coolant line -1- at the fan shroud.

⚠ CAUTION

There is a risk of hand injury if the radiator fan turns on by itself.

– Do not reach into the radiator fan when disconnecting the connector.

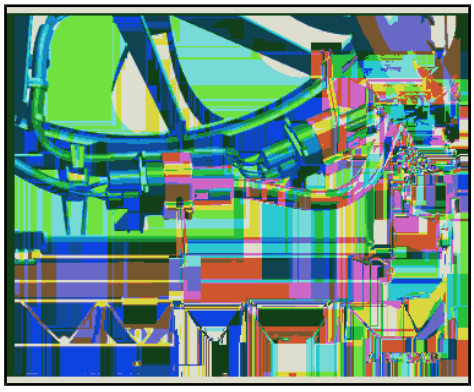

– Disconnect the connectors -1 and 2- for the radiator fan.

cardiagn.com

– Push the left and right locking latches for the fan shroud at the same time -arrow- and lift the fan shroud upward from the radiator and remove from downward.

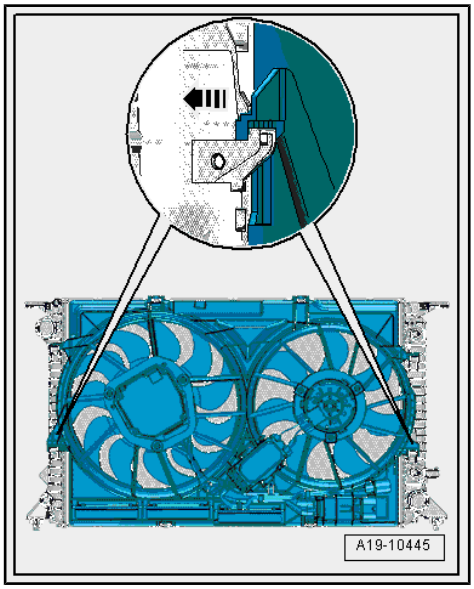

Installing

Install in reverse order of removal and note the following:

- Used coolant cannot be used again.

– Install the engine cover. Refer to ⇒ page 77 .

– Install the lock carrier cover. Refer to ⇒ Body Exterior; Rep. Gr. 63 ; Front Bumper .

– Connect the coolant hose to the connector coupling. Refer to ⇒ page 189 .

– Fill with coolant. Refer to ⇒ page 140 .

Tightening Specifications

♦ Refer to ⇒ Body Exterior; Rep. Gr. 66 ; Noise Insulation; Overview - Noise Insulation .

4.3.2 Fan Shroud, Removing and Installing, Vehicle with High-Voltage System

Special tools and workshop equipment required

♦ Coolant Collection System - VAS5014- or Shop Crane - Drip Tray - VAS6208-

Removing

– Lower longitudinal member, removing and installing, vehicles with high-voltage system. Refer to ⇒ Body Exterior; Rep. Gr. 50 ; Lock Carrier .

– Electrically-driven A/C compressor, removing and installing, vehicles with 6-cylinder engine. Refer to ⇒ Heating, Ventilation and Air Conditioning; Rep. Gr. 87 ; A/C Compressor; A/C Compressor, Removing and Installing .

– Place the container of the -VAS5014- or the -VAS6208- underneath.

– Lift the clamp -arrow- and remove the coolant hose from the lower right of the radiator and drain the coolant.

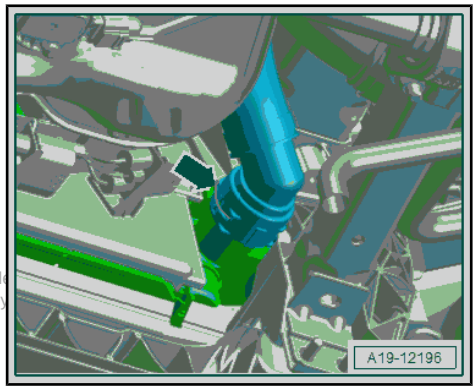

Protected by copyright. Copying for private or commercial purposes, in part or in whole, is not permitted unless authorised by AUDI AG. AUDI AG does not guarantee or accept any liability with respect to the correctness of information in this document. Copyright by AUDI AG.

cardiagn.com

– Lift the clip -arrow- and remove the plug.

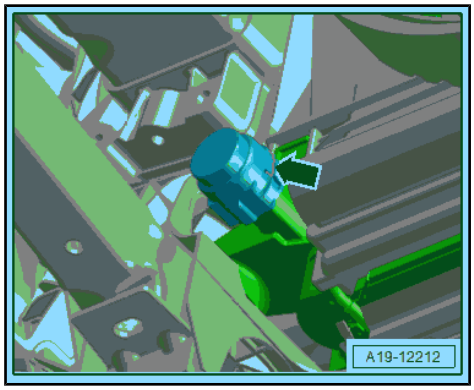

– Remove the low pressure side refrigerant line from the Electrical A/C Compressor -V470- and place toward the rear.
– Remove the left and right bolts -1-.
– Loosen the left and right hose clamps -arrows- and remove the coolant hoses from the coolant pipes.
– Remove the coolant pipes.
– Remove the left engine cover. Refer to ⇒ page 77 .
– Remove the lock carrier cover. Refer to ⇒ Body Exterior; Rep. Gr. 63 ; Front Bumper .

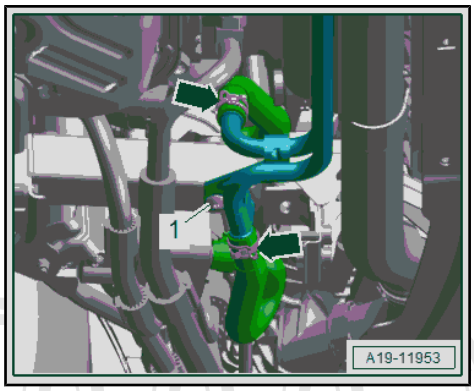

– Lift the clip -2- and remove the connection from the radiator and move to the side
– Free up the coolant line -1- at the fan shroud.

⚠ CAUTION

There is a risk of hand injury if the radiator fan turns on by itself.

– Do not reach into the radiator fan when disconnecting the connector.

Protected by copyri
permitted unless a
with respect to t
whole, is not
pt any liability
AUDI AG.

– Disconnect the connectors -1 and 2- for the radiator fan.

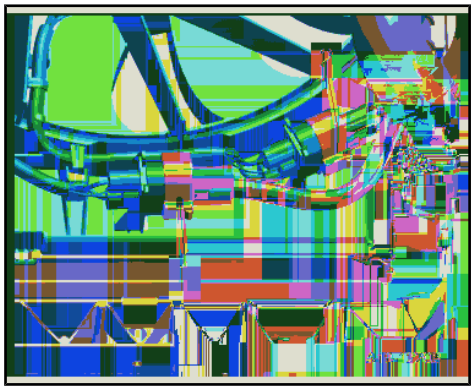

cardiagn.com

– Push the left and right locking latches for the fan shroud at the same time -arrow- and lift the fan shroud upward from the radiator and remove from downward.

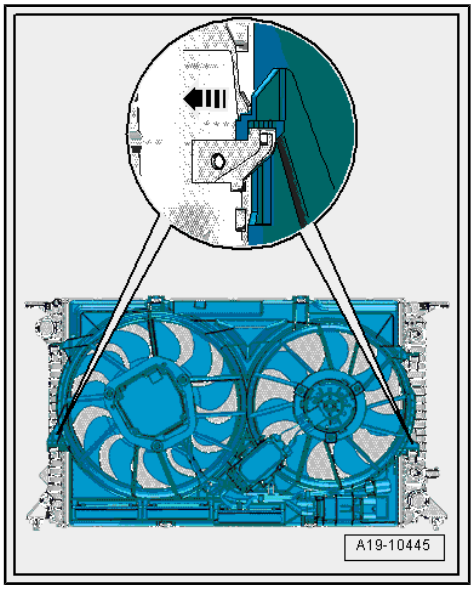

Installing

Install in reverse order of removal and note the following:

- Used coolant cannot be used again.

– Install the engine cover. Refer to ⇒ page 77 .

– Install the lock carrier cover. Refer to ⇒ Body Exterior; Rep. Gr. 63 ; Front Bumper .

– Connect the coolant hose to the connector coupling. Refer to ⇒ page 189 .

– Fill with coolant. Refer to ⇒ page 140 .

Protected by copyright. Copying for private or commercial purposes, in part or in whole, is not permitted unless authorised by AUDI AG. AUDI AG does not guarantee or accept any liability with respect to the correctness of information in this document. Copyright by AUDI AG.

Tightening Specifications

♦ Refer to ⇒ Body Exterior; Rep. Gr. 66 ; Noise Insulation; Overview - Noise Insulation .

4.4 Radiator Fan, Removing and Installing

Removing

- The securing components for the wires must correspond to the production series. Refer to Parts Catalog.

– Remove the fan shroud. Refer to ⇒ “4.3 Fan Shroud, Removing and Installing”, page 195 .

– Free up the wiring harness.

– Remove the bolts -1 or 2- and remove the corresponding radiator fan.

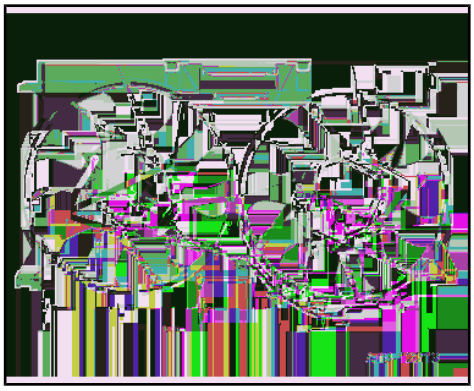

TIP:

Do not remove the counter-balancing clamps from the fan wheel. This can lead to noise generation due to a fan wheel imbalance.

Installing

Install in reverse order of removal and note the following:

– Install the fan shroud. Refer to ⇒ “4.3 Fan Shroud, Removing and Installing”, page 195 .

Tightening Specifications

♦ Refer to ⇒ “4.1 Overview - Radiator/Radiator Fan”, page 188

4.5 Radiator Shutter, Removing and Installing

Removing

– Remove the headlamps. Refer to ⇒ Electrical Equipment; Rep. Gr. 94 ; Headlamps; Headlamps, Removing and Installing .

cardiagn.com

– Open the cover in direction of -arrow- and disconnect the connector -1- on the Radiator Shutter Motor - V544- and free up the wire.

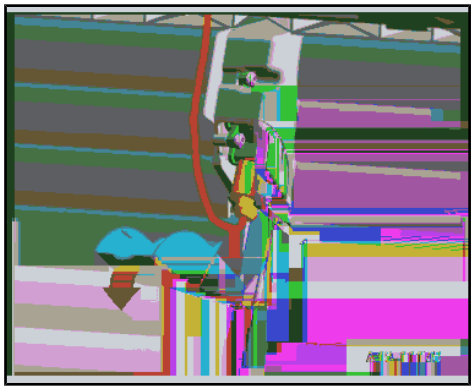

– Remove the bolts -arrows- and move the mounting bracket with release cable for the hook operating lever -1- to the side.

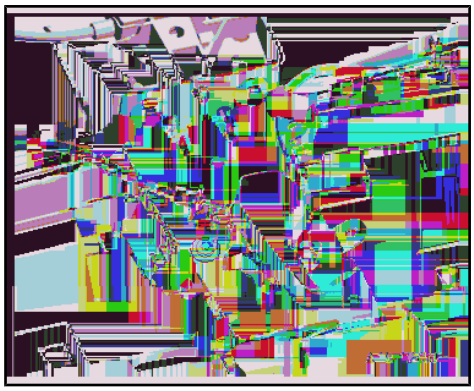

– Open the catches in direction of -arrows- and remove the air duct -1-.

Protected by copyright. Copying for private or commercial purposes, in part or in whole, is
permitted unless authorised by AUDI AG. AUDI AG does not guarantee or accept any lia
with respect to the correctness of information in this document. Copyright by AUDI AG

– Remove the bolts -arrows-.
– Free up the wiring harness.
– Remove the radiator shutter -1-.

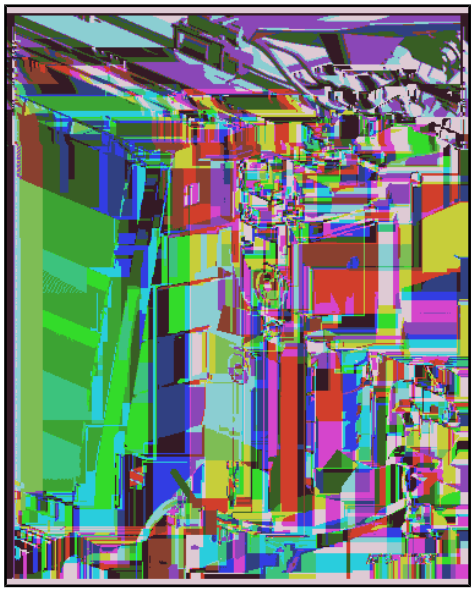

Installing

Install in reverse order of removal and note the following:

– Install the headlamps. Refer to ⇒ Electrical Equipment; Rep. Gr. 94 ; Headlamps; Headlamps Removing and Installing .

Tightening Specifications

♦ Refer to ⇒ “4.1 Overview - Radiator/Radiator Fan”, page 188

♦ Refer to ⇒ Body Exterior; Rep. Gr. 55 ; Hood; Overview - Release Cable .

cardiagn.com

4.6 Radiator Shutter Motor, Removing and Installing

Special tools and workshop equipment required

- Expanding pliers, commercially available

Removing

– Bring the radiator shutter as shown into the “half open” position.

– Remove the bolts -arrows-.

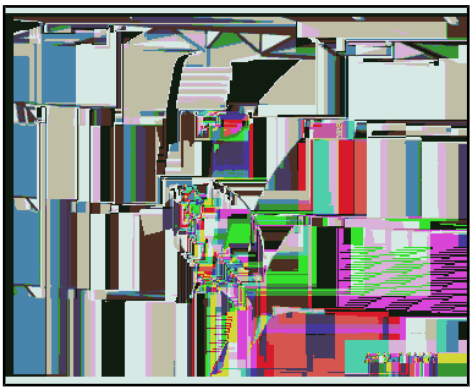

– Remove the connecting panel -2- with expanding pliers -1- from the slats.

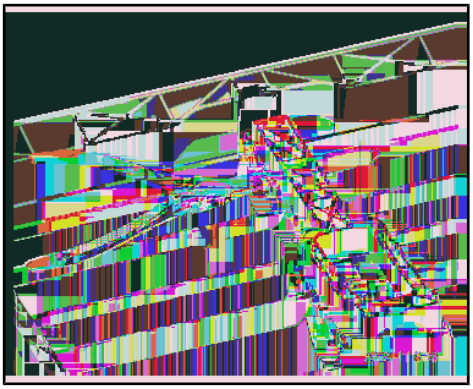

– Push the right upper slat -1- to the exterior in direction of -arrow A- and let it hang downward at the same time the driver -2- must remain in the adjustment motor -3-.

– Remove the driver from the adjustment motor.

– Pivot the adjustment motor in the direction of -arrow B- and remove from the mount.

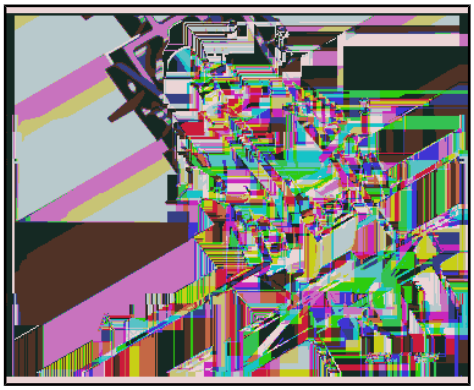

Installing

Install in reverse order of removal and note the following:

Protected by copyright. Copying for private and commercial purposes, in part or in whole, is not permitted unless authorised by AUDI AG. AUDI AG does not guarantee or accept any liability with respect to the correctness of information in this document. Copyright by AUDI AG.

cardiagn.com

– To push on the connecting panel -4- bring all slats as shown into the “closed” position.
– Push in the connecting panel in direction of -arrows- at the same time pay attention to the sequence -1, 2 and 3-.
– Install the radiator shutter. Refer to ⇒ “4.5 Radiator Shutter, Removing and Installing”, page 199 .

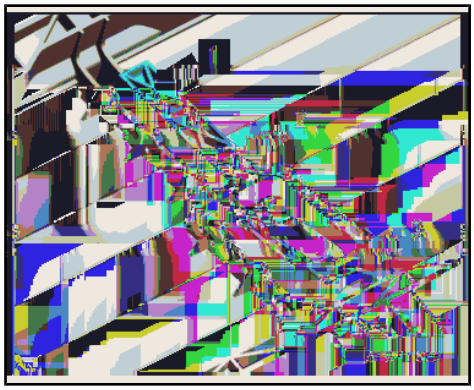

Tightening Specifications

♦ Refer to ⇒ “4.1 Overview - Radiator/Radiator Fan”, page 188

4.7 Radiator for High-Voltage System Coolant Circuit, Removing and Installing

Special tools and workshop equipment required

♦ Hose Clamps - Up To 25mm - 3094-
♦ Container of the Coolant Collection System -VAS5014- or the Shop Crane - Drip Tray - VAS6208-
♦ Hose Clip Pliers - VAS6362-
♦ Elbow Assembly Tool - T10118-

Removing

– Remove the front bumper cover. Refer to ⇒ Body Exterior; Rep. Gr. 63 ; Front Bumper; Bumper Cover, Removing and Installing .
– Release the left and right catches with the -T10118- in the direction of -arrows- and remove the upper air ducts -1- and side air ducts -2-. (Shown with the radiator removed).

Protected by copyright. Copying for private or commercial purposes, in part or in whole, is not permitted unless authorised by AUDI AG. AUDI AG does not guarantee or accept any liability with respect to the correctness of information in this document. Copyright by AUDI AG.

cardiagn.com

– Disconnect the connector -2- for the High Pressure Sensor - G65- .

NOTICE

Risk of damaging the refrigerant lines and hoses by removing and pivoting the A/C compressor.

– Do not bend, twist or stretch the refrigerant lines and hoses.

– Release the left and right catches in the direction of -arrows- disengage the condenser from the radiator and tie up to the side.

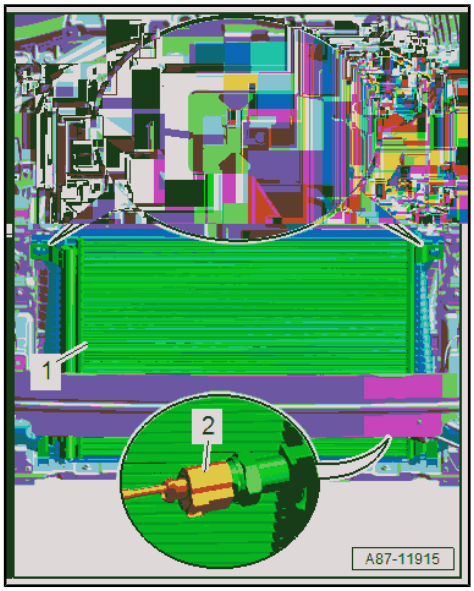

Protected by copyright. Copying for private or commercial purposes, in part or in whole, is not permitted unless authorised by AUDI AG. AUDI AG does not guarantee or accept any liability with respect to the correctness of information in this document. Copyright by AUDI AG.

– Loosen the hose clamps -1 and 2-, then clamp off the coolant hoses at the radiator for the high-voltage system coolant circuit with the -3094- and remove the them.

– Release the left and right catches -arrows- and remove the radiator for the high-voltage system coolant circuit.

Installing

Install in reverse order of removal and note the following:

- Secure all hose connections with hose clamps that match the ones used in series production. Refer to the Parts Catalog.
- All of the coolant must be changed if the radiator was replaced.
- Used coolant cannot be used again.

– Install the front bumper cover. Refer to ⇒ Body Exterior; Rep. Gr. 63 ; Front Bumper; Bumper Cover, Removing and Installing .

– Coolant, draining and filling, vehicle with high-voltage system, high-voltage system coolant circuit. Refer to ⇒ “1.3.3 Coolant, Draining and Filling, Vehicle with High-Voltage System, High-Voltage System Coolant Circuit”, page 146 .

cardiagn.com

5 Special Tools

Special tools and workshop equipment required

- Elbow Assembly Tool - T10118-

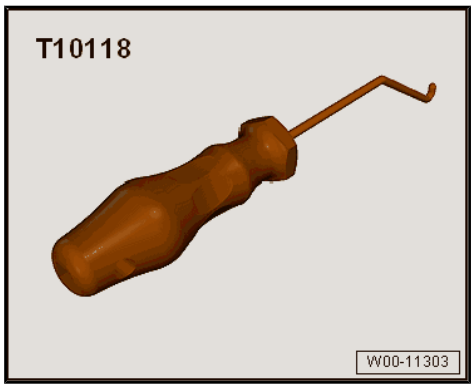

- Cooling System Tester - VAG1274B-

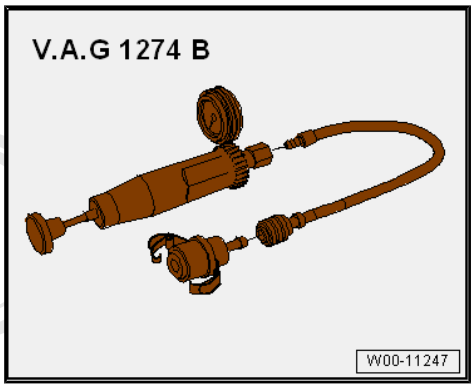

- Turbocharger Tester Kit - VAG1397A-

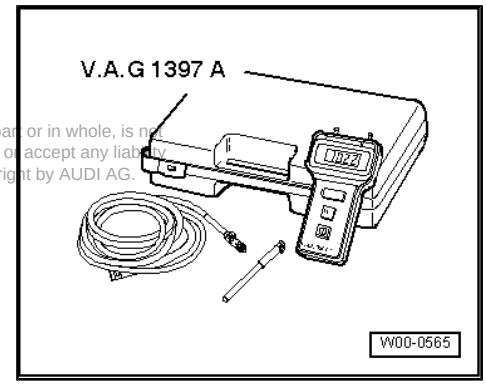

- Coolant Collection System - VAS5014- or Shop Crane - Drip Tray - VAS6208-

Protected by copyright. Copying for private or commercial purposes, in part or in whole, is not permitted unless authorised by AUDI AG. AUDI AG does not guarantee or accept any liability with respect to the correctness of information in this document. Copyright by AUDI AG.

cardiagn.com

- Hose Clip Pliers - VAS6340-

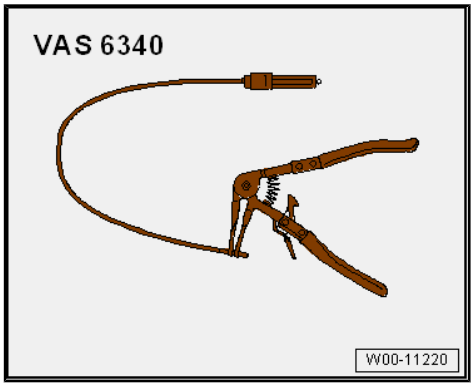

- Hose Clip Pliers - VAS6362-

- Cooling System Tester for High Voltage Batteries - VAS691005-

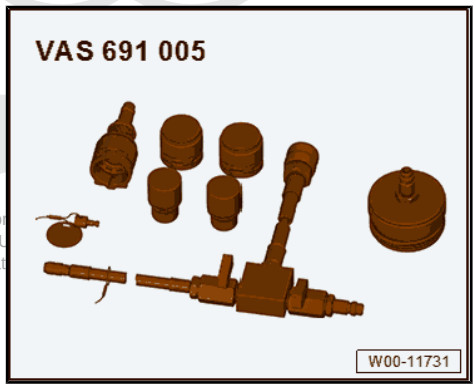

Protected by copyright. Copying for private or
permitted unless authorised by AUDI AG. AU
with respect to the correctness of informat

- Cooling System Tester - Directional Valve - VAS691005/1-
- Cooling System Tester for High Voltage Batteries - Plug - VAS691005/2-
- Hose Clamps - Up To 25mm - 3094-

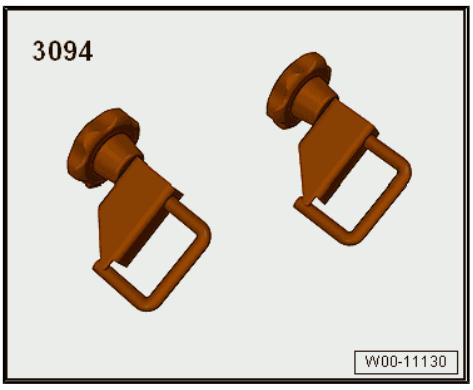

cardiagn.com

21 – Turbocharger, Supercharger

1 Turbocharger

⇒ "1.1 Overview - Turbocharger", page 206

⇒ "1.2 Turbocharger, Removing and Installing", page 208

1.1 Overview - Turbocharger

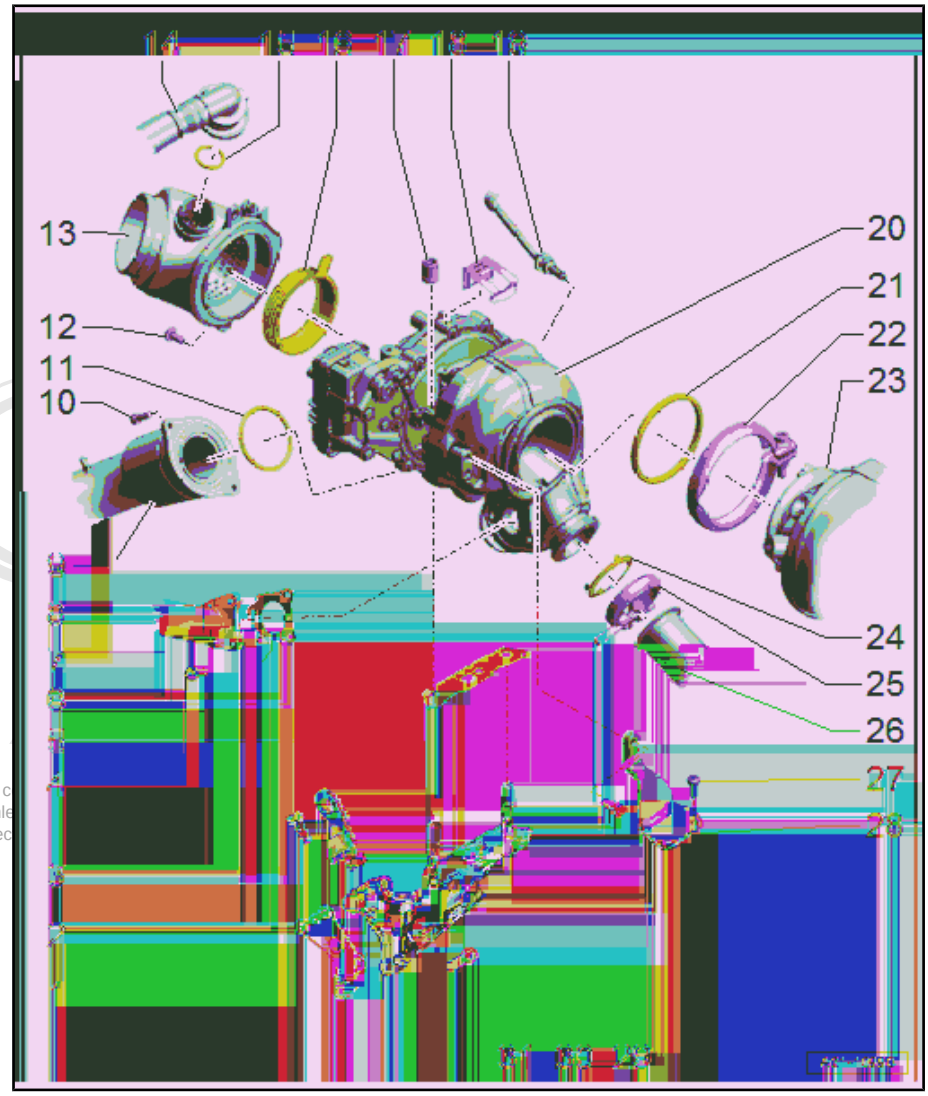

1 - Seal

- ❑ Installation instructions. Refer to ⇒ Servicing – 6-Cylinder TDI Common Rail Engine; Rep. Gr. 21 ; Turbocharger; Overview - Turbocharger .

2 - Engine Lifting Eye

3 - Bolt

- ❑ Tightening specifications. Refer to ⇒ Servicing – 6-Cylinder TDI Common Rail Engine; Rep. Gr. 21 ; Turbocharger; Overview - Turbocharger .

4 - Stud Bolts

- ❑ Tightening specifications. Refer to ⇒ Servicing – 6-Cylinder TDI Common Rail Engine; Rep. Gr. 21 ; Turbocharger; Overview - Turbocharger .

5 - Seal

- ❑ Installation instructions. Refer to ⇒ Servicing – 6-Cylinder TDI Common Rail Engine; Rep. Gr. 21 ; Turbocharger; Overview - Turbocharger .

6 - Seal

- ❑ Installation instructions. Refer to ⇒ Servicing – 6-Cylinder TDI Common Rail Engine; Rep. Gr. 21 ; Turbocharger; Overview - Turbocharger .

7 - Bolt

- ❑ Tightening specifications. Refer to ⇒ Servicing – 6-Cylinder TDI Common Rail Engine; Rep. Gr. 21 ; Turbocharger; Overview - Turbocharger .

8 - Pipe

- ❑ To the EGR pipe cooler

9 - Air Duct Pipe

10 - Bolt

- ❑ Tightening specifications. Refer to ⇒ Servicing – 6-Cylinder TDI Common Rail Engine; Rep. Gr. 21 ; Turbocharger; Overview - Turbocharger .

Protected by c
permitted unle
written spec

cardiagn.com

11 - O-ring

- ❑ Installation instructions. Refer to ⇒ Servicing – 6-Cylinder TDI Common Rail Engine; Rep. Gr. 21 ; Turbocharger; Overview - Turbocharger .

12 - Bolt

- ❑ Tightening specifications. Refer to ⇒ Servicing – 6-Cylinder TDI Common Rail Engine; Rep. Gr. 21 ; Turbocharger; Overview - Turbocharger .

13 - Connection

- ❑ For the air duct hose
- ❑ Installation instructions. Refer to ⇒ Servicing – 6-Cylinder TDI Common Rail Engine; Rep. Gr. 21 ; Turbocharger; Overview - Turbocharger .

14 - Hose

- ❑ For the crankcase ventilation

15 - O-ring

- ❑ Installation instructions. Refer to ⇒ Servicing – 6-Cylinder TDI Common Rail Engine; Rep. Gr. 21 ; Turbocharger; Overview - Turbocharger .

16 - Seal

- ❑ Installation instructions. Refer to ⇒ Servicing – 6-Cylinder TDI Common Rail Engine; Rep. Gr. 21 ; Turbocharger; Overview - Turbocharger .

Protected by copyright. Copying for private or commercial purposes, in part or in whole, is not permitted unless authorised by AUDI AG. AUDI AG does not guarantee or accept any liability with respect to the correctness of information in this document. Copyright by AUDI AG.

17 - Nut

- ❑ Tightening specifications. Refer to ⇒ Servicing – 6-Cylinder TDI Common Rail Engine; Rep. Gr. 21 ; Turbocharger; Overview - Turbocharger .

18 - Clip

19 - Exhaust Gas Temperature Sensor 1 - G235-

- ❑ Overview. Refer to ⇒ “4.1 Overview - Exhaust Temperature Regulation”, page 281 .

20 - Turbocharger

- ❑ With Turbocharger Control Module 1 - J724-
- ❑ Removing and installing. Refer to ⇒ Servicing – 6-Cylinder TDI Common Rail Engine; Rep. Gr. 21 ; Turbocharger; Turbocharger, Removing and Installing .

21 - Seal

- ❑ Installation instructions. Refer to ⇒ Servicing – 6-Cylinder TDI Common Rail Engine; Rep. Gr. 21 ; Turbocharger; Overview - Turbocharger .

22 - Screw-Type Clamp

- ❑ Installation instructions. Refer to ⇒ Servicing – 6-Cylinder TDI Common Rail Engine; Rep. Gr. 21 ; Turbocharger; Overview - Turbocharger .

23 - Emissions Control Module

- ❑ Overview. Refer to ⇒ “2.1 Overview - Emissions Control System”, page 266 .

24 - Seal

- ❑ Installation instructions. Refer to ⇒ Servicing – 6-Cylinder TDI Common Rail Engine; Rep. Gr. 21 ; Turbocharger; Overview - Turbocharger .

25 - Screw-Type Clamp

- ❑ Installation instructions. Refer to ⇒ Servicing – 6-Cylinder TDI Common Rail Engine; Rep. Gr. 21 ; Turbocharger; Overview - Turbocharger .

26 - Exhaust Manifold

- ❑ Overview. Refer to ⇒ “6.1 Overview - Exhaust Manifold”, page 291 .

27 - Bolt

- ❑ Tightening specifications. Refer to ⇒ Servicing – 6-Cylinder TDI Common Rail Engine; Rep. Gr. 21 ; Turbocharger; Overview - Turbocharger .

28 - Bracket

- ❑ For the turbocharger

cardiagn.com

29 - Bolt

- ❑ Tightening specifications. Refer to ⇒ Servicing – 6-Cylinder TDI Common Rail Engine; Rep. Gr. 21 ; Turbocharger; Overview - Turbocharger .

30 - Bracket

- ❑ For the turbocharger

31 - Bolt

- ❑ Tightening specifications. Refer to ⇒ Servicing – 6-Cylinder TDI Common Rail Engine; Rep. Gr. 21 ; Turbocharger; Overview - Turbocharger .

1.2 Turbocharger, Removing and Installing

All procedures are described. Refer to ⇒ Servicing – 6-Cylinder TDI Common Rail Engine; Rep. Gr. 21 ; Turbocharger; Turbocharger, Removing and Installing .

cardiagn.com

Protected by copyright. Copying for private or commercial purposes, in part or in whole, is not permitted unless authorised by AUDI AG. AUDI AG does not guarantee or accept any liability with respect to the correctness of information in this document. Copyright by AUDI AG.

2 Charge Air System

⇒ “2.1 Overview - Charge Air System”, page 209

⇒ “2.2 Overview - Charge Air Hose Connections”, page 212

⇒ “2.3 Charge Air Cooler, Removing and Installing”, page 212

⇒ “2.4 Charge Air Pressure Sensor G31 , Removing and Installing”, page 216

⇒ “2.5 Charge Air System, Checking for Leaks”, page 216

2.1 Overview - Charge Air System

⇒ “2.1.1 Overview - Charge Air System, Center Charge Air Cooler”, page 209

⇒ “2.1.2 Overview - Charge Air System, Left Charge Air Cooler”, page 210

⇒ “2.1.3 Overview - Charge Air System, Right Charge Air Cooler”, page 211

2.1.1 Overview - Charge Air System, Center Charge Air Cooler

1 - Center Charge Air Cooler

- ❑ Removing and installing. Refer to ⇒ “2.3.1 Center Charge Air Cooler, Removing and Installing”, page 212 .

2 - Air Duct Hose

- ❑ To charge air cooler
- ❑ Must be free of oil and grease before installing

3 - Bolt

- ❑ 9 Nm

4 - Spacer Sleeve

5 - Grommet

6 - Air Duct Pipe

7 - Bolt

- ❑ 9 Nm

8 - O-Ring

- ❑ Replace after removing

9 - From the Turbocharger

10 - To Intake Manifold

11 - Air Duct Hose

- ❑ Must be free of oil and grease before installing

12 - Air Duct Pipe

13 - O-Ring

- ❑ Replace after removing

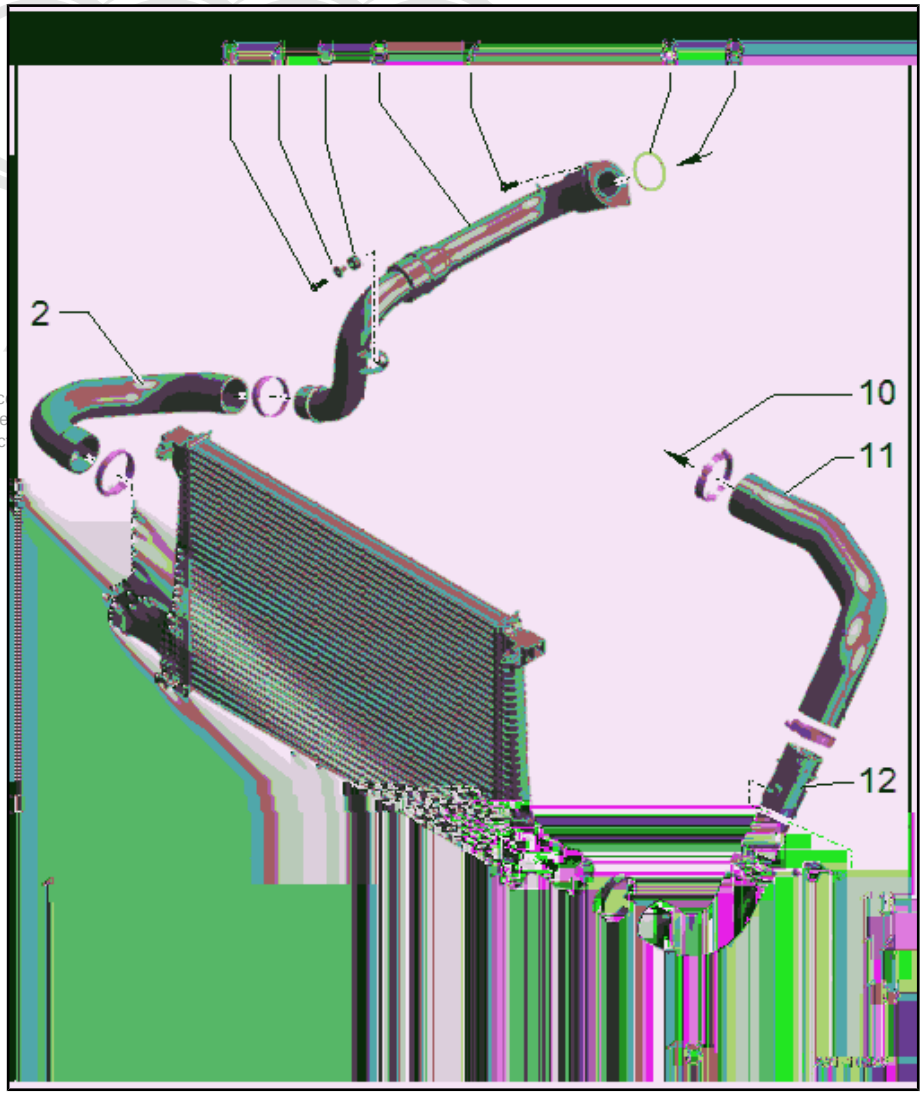

Protected by c
permitted unle
with respec

cardiagn.com

14 - Intake Air Temperature Sensor - G42-

- ❑ Removing and installing. Refer to ⇒ “6.1.2 Intake Air Temperature Sensor G42 , Removing and Installing, Versions with Side Charge Air Cooler”, page 241 .

15 - Bolt

- ❑ 5 Nm

16 - Air Duct Hose

- ❑ Must be free of oil and grease before installing

2.1.2 Overview - Charge Air System, Left Charge Air Cooler

1 - Air Duct

2 - From Right Charge Air Cooler

3 - Bolt

- ❑ 9 Nm

4 - Spacer Sleeve

5 - Rubber Bushing

6 - Metal Nut

7 - Air Duct Hose

- ❑ Must be free of oil and grease before installing

8 - Bolt

- ❑ 9 Nm

9 - Spacer Sleeve

10 - Rubber Bushing

11 - From Right Charge Air Cooler

12 - Upper Front Air Duct Pipe

- ❑ Must be free of oil and grease before installing

13 - To Intake Manifold

14 - Air Duct Hose

- ❑ Must be free of oil and grease before installing

15 - O-Ring

- ❑ Replace after removing

16 - Intake Air Temperature Sensor - G42-

- ❑ Removing and installing. Refer to ⇒ “6.1.2 Intake Air Temperature Sensor G42 , Removing and Installing, Versions with Side Charge Air Cooler”, page 241 .

17 - Bolt

- ❑ 5 Nm

18 - Bracket

19 - Bolt

- ❑ 9 Nm

e, is not permitted unless authorised by AUDI AG. AUDI AG does not guarantee or accept any liability with respect to the correctness of information in this document. Copyright by AUDI AG.

cardiagn.com

20 - Spacer Sleeve

21 - Grommet

22 - Link Washer

23 - Left Charge Air Cooler

- ❑ Removing and installing. Refer to ⇒ “2.3 Charge Air Cooler, Removing and Installing”, page 212 .

24 - Rubber Bushing

- ❑ For the charge air cooler

25 - Air Duct Hose

- ❑ Must be free of oil and grease before installing

2.1.3 Overview - Charge Air System, Right Charge Air Cooler

1 - Rubber Bushing

2 - Spacer Sleeve

3 - Bolt

- ❑ 9 Nm

4 - Lower Front Air Duct Pipe

- ❑ Must be free of oil and grease before installing

5 - Air Duct Hose

- ❑ Must be free of oil and grease before installing

6 - Air Duct

7 - Bolt

- ❑ 9 Nm

8 - Spacer Sleeve

9 - Rubber Bushing

10 - Right Charge Air Cooler

- ❑ Removing and installing. Refer to ⇒ “2.3 Charge Air Cooler, Removing and Installing”, page 212 .

11 - Metal Nut

12 - Bracket

13 - Link Washer

14 - Grommet

15 - Spacer Sleeve

16 - Bolt

- ❑ 9 Nm

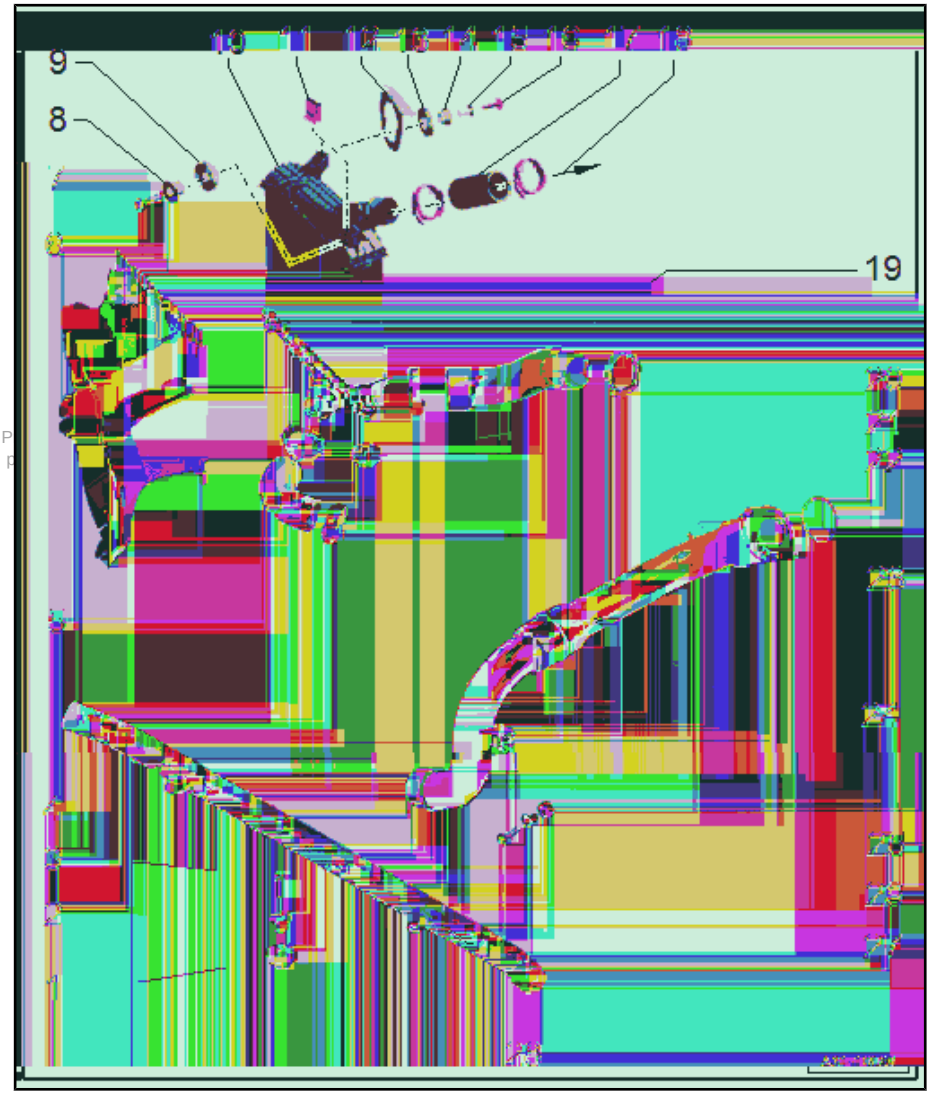

17 - Air Duct Hose

- ❑ To the turbocharger
- ❑ Must be free of oil and grease before installing

cardiagn.com

18 - To Intake Manifold

19 - Air Duct Hose

- ❑ Must be free of oil and grease before installing

20 - Rubber Bushing

- ❑ For the charge air cooler

21 - Bolt

- ❑ 9 Nm

22 - O-Ring

- ❑ Replace after removing

23 - From the Turbocharger

24 - Air Duct Pipe

- ❑ Must be free of oil and grease before installing

25 - Rubber Bushing

Protected by copyright. Copying for private or commercial purposes, in part or in whole, is not permitted unless authorised by AUDI AG. AUDI AG does not guarantee or accept any liability with respect to the correctness of information in this document. Copyright by AUDI AG.

26 - Spacer Sleeve

27 - Bolt

- ❑ 9 Nm

28 - To the Left Charge Air Cooler

2.2 Overview - Charge Air Hose Connections

All components are described. Refer to ⇒ Servicing – 6-Cylinder TDI Common Rail Engine; Rep. Gr. 21 ; Charge Air System; Overview - Charge Air Hose Connections .

2.3 Charge Air Cooler, Removing and Installing

⇒ "2.3.1 Center Charge Air Cooler, Removing and Installing", page 212

⇒ "2.3.2 Left Charge Air Cooler, Removing and Installing", page 214

⇒ "2.3.3 Right Charge Air Cooler, Removing and Installing", page 215

2.3.1 Center Charge Air Cooler, Removing and Installing

Special tools and workshop equipment required

- ♦ Elbow Assembly Tool - T10118-

Removing

– Pay attention to the guidelines for clean working conditions. Refer to ⇒ Servicing – 6-Cylinder TDI Common Rail Engine; Rep. Gr. 00 ; Repair Information; Guidelines for Clean Working Conditions .

– Remove the molded foam part. Refer to ⇒ Body Exterior; Rep. Gr. 63 ; Front Bumper .

cardiagn.com

– Release the left and right catches with the -T10118- in the direction of -arrows- and remove the upper air ducts -1- and side air ducts -2-. (Shown with the radiator removed).

Protected by copyright. Copying for private or commercial purposes, in part or in whole, is not permitted unless authorized by Audi AG. Audi AG does not guarantee or accept any liability with respect to the correctness of information in this document.

– Disconnect the connector -2- for the High Pressure Sensor - G65- .

NOTICE

Risk of damaging the refrigerant lines and hoses by removing and pivoting the A/C compressor.

– Do not bend, twist or stretch the refrigerant lines and hoses.

– Release the left and right catches in the direction of -arrows- disengage the condenser -1- from the radiator and tie up to the side.

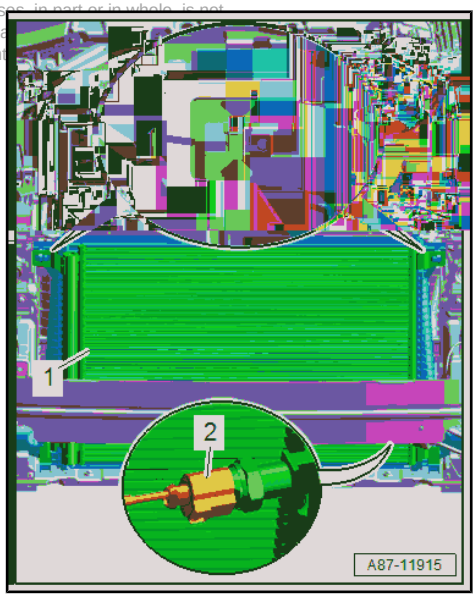

cardiagn.com

– Loosen the hose clamp -2- on the left and right sides and remove the air duct hose from the charge air cooler -1-.
– Release the retainers in direction of -arrows- on the left and right sides and disengage the charge air cooler from the radiator.
– Remove the charge air cooler downward.

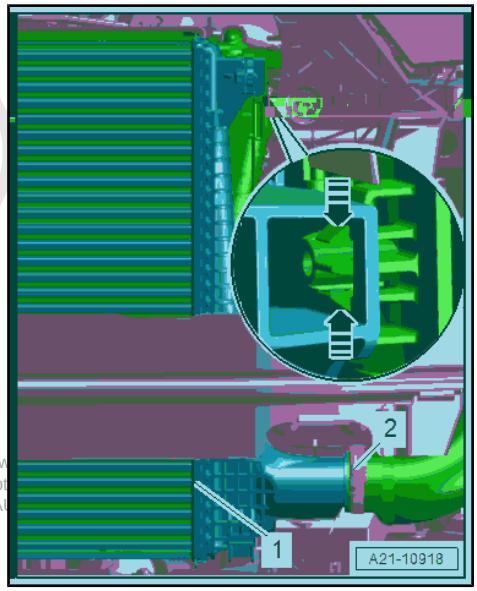

Installing

Install in reverse order of removal and note the following:

- If there are small impressions on the slats. Refer to ⇒ Servicing – 6-Cylinder TDI Common Rail Engine; Rep. Gr. 00 ; Repair Information; Radiator and Condenser Assembly .
- Secure all hose connections with hose clamps that match the ones used in series production. Refer to the Parts Catalog.

Protected by copyright. Copying for private or commercial purposes, in part or in w
permitted unless authorised by AUDI AG. AUDI AG does not guarantee or accept
any liability with respect to the correctness of information in this document. Copyright by AU

– Bring the charge air cooler into the installation position and install it on the radiator until it engages audibly.
– Install the molded foam part. Refer to ⇒ Body Exterior; Rep. Gr. 63 ; Front Bumper .

Tightening Specifications

◆ Refer to ⇒ Servicing – 6-Cylinder TDI Common Rail Engine; Rep. Gr. 21 ; Charge Air System; Overview - Charge Air Hose Connections .

2.3.2 Left Charge Air Cooler, Removing and Installing

Removing

– Pay attention to the guidelines for clean working conditions. Refer to ⇒ Servicing – 6-Cylinder TDI Common Rail Engine; Rep. Gr. 00 ; Repair Information; Guidelines for Clean Working Conditions .
– Remove the left headlamp. Refer to ⇒ Electrical Equipment; Rep. Gr. 94 ; Headlamps; Headlamps, Removing and Installing .
– Release the upper and lower retainers in the direction of -arrow A- and remove the air duct -1- to the left in the direction of -arrow B-.

cardiagn.com

– Disconnect the connector -2- for the Intake Air Temperature Sensor - G42- .

– Remove the bolts -1 and 3-.

– Loosen the hose clamps -arrows-, disengage the charge air cooler -4- upward from the lock carrier and remove it from the air duct hoses.

Installing

Install in reverse order of removal and note the following:

- If there are small impressions on the slats. Refer to ⇒ Servicing – 6-Cylinder TDI Common Rail Engine; Rep. Gr. 00 ; Repair Information; Radiator and Condenser Assembly .
- Secure all hose connections with hose clamps that match the ones used in series production. Refer to the Parts Catalog.

– Install the headlamps. Refer to ⇒ Electrical Equipment; Rep. Gr. 94 ; Headlamps; Headlamps Removing and Installing .

Tightening Specifications

♦ Refer to
⇒ “2.1.2 Overview - Charge Air System, Left Charge Air Cooler”, page 210

♦ Refer to ⇒ Servicing – 6-Cylinder TDI Common Rail Engine; Rep. Gr. 21 ; Charge Air System; Overview - Charge Air Hose Connections .

2.3.3 Right Charge Air Cooler, Removing and Installing

Removing

– Pay attention to the guidelines for clean working conditions. Refer to ⇒ Servicing – 6-Cylinder TDI Common Rail Engine; Rep. Gr. 00 ; Repair Information; Guidelines for Clean Working Conditions .

– Vehicle without parking heater: Remove the bumper cover. Refer to ⇒ Body Exterior; Rep. Gr. 63 ; Front Bumper; Bumper Cover, Removing and Installing .

– Vehicle with parking heater: Remove the right headlamp. Refer to ⇒ Electrical Equipment; Rep. Gr. 94 ; Headlamp; Headlamp, Removing and Installing .

– Release the upper and lower retainers in the direction of -arrow B- and remove the air duct -1- to the right in the direction of -arrow A-.

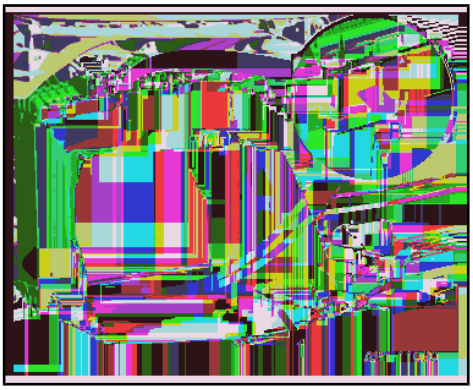

Protected by copyright. Copying for private or commercial purposes, in part or in whole, is not permitted unless authorised by AUDI AG. AUDI AG does not guarantee or accept any liability with respect to the correctness of information in this document. Copyright by AUDI AG.

cardiagn.com

– Remove the bolts -2 and 3-.

– Loosen the hose clamps -arrows-, disengage the charge air cooler -1- upward from the lock carrier and remove it from the air duct hoses.

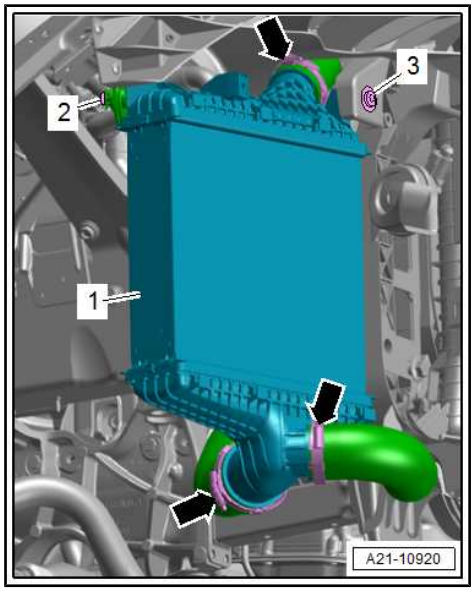

Installing

Install in reverse order of removal and note the following:

- If there are small impressions on the slats. Refer to ⇒ Servicing – 6-Cylinder TDI Common Rail Engine; Rep. Gr. 00 ; Repair Information; Radiator and Condenser Assembly .
- Secure all hose connections with hose clamps that match the ones used in series production. Refer to the Parts Catalog.

– Install the bumper cover. Refer to ⇒ Body Exterior; Rep. Gr. 63 ; Front Bumper; Bumper Cover, Removing and Installing .

– Install the headlamps. Refer to ⇒ Electrical Equipment; Rep. Gr. 94 ; Headlamps; Headlamps Removing and Installing .

Tightening Specifications

◆ Refer to ⇒ “2.1.3 Overview - Charge Air System, Right Charge Air Cooler”, page 211

◆ Refer to ⇒ Servicing – 6-Cylinder TDI Common Rail Engine; Rep. Gr. 21 ; Charge Air System; Overview - Charge Air Hose Connections .

2.4 Charge Air Pressure Sensor - G31- , Removing and Installing

Removing

– Remove the air filter housing. Refer to ⇒ “3.2 Air Filter Housing, Removing and Installing”, page 229 .

– Remove the left engine cover. Refer to ⇒ “3.1 Engine Cover, Removing and Installing”, page 77 .

All additional procedures are described. Refer to ⇒ Servicing – 6-Cylinder TDI Common Rail Engine; Rep. Gr. 21 ; Charge Air System; Charge Air Pressure Sensor - G31- , Removing and Installing .

Installing

Additional procedures:

- Replace the seal and O-ring after removal.
- Secure all hose connections with hose clamps that match the ones used in series production. Refer to the Parts Catalog.

– Install the engine cover. Refer to ⇒ “3.1 Engine Cover, Removing and Installing”, page 77 .

– Install the air filter housing. Refer to ⇒ “3.2 Air Filter Housing, Removing and Installing”, page 229 .

Protected by copyright. Copying for private or commercial purposes, in part or in whole, is not permitted unless authorised by AUDI AG. AUDI AG does not guarantee or accept any liability with respect to the correctness and completeness of this document. © AUDI AG

2.5 Charge Air System, Checking for Leaks

Procedure

– Pay attention to the guidelines for clean working conditions. Refer to ⇒ Servicing – 6-Cylinder TDI Common Rail Engine; Rep. Gr. 00 ; Repair Information; Guidelines for Clean Working Conditions .

cardiagn.com

– Remove the air filter upper section. Refer to ⇒ “3.2 Air Filter Housing, Removing and Installing”, page 229 .
– Disconnect the connector -2-.
– Loosen the hose clamp -1- and open the clips in direction of -arrows-.
– Remove the Mass Airflow Sensor - G70- -3- from the air filter lower section and remove with the air duct pipe.

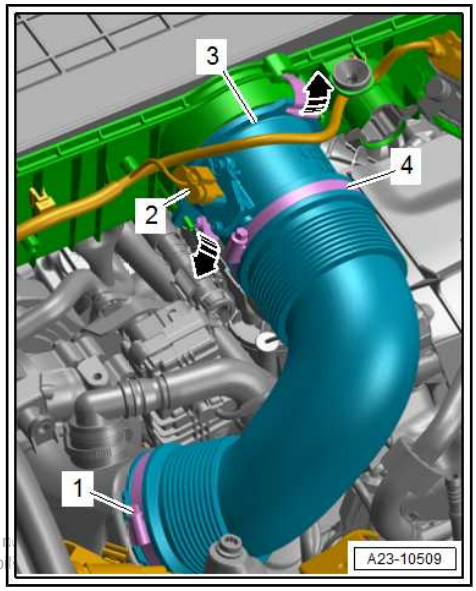

All additional procedures are described. Refer to ⇒ Servicing – 6-Cylinder TDI Common Rail Engine; Rep. Gr. 21 ; Charge Air System; Charge Air System, Checking for Leaks .

Assembling

Additional procedures:

– Install the air filter upper section. Refer to ⇒ “3.2 Air Filter Housing, Removing and Installing”, page 229 .

Tightening Specifications

♦ Refer to ⇒ Servicing – 6-Cylinder TDI Common Rail Engine; Rep. Gr. 21 ; Charge Air System; Overview - Charge Air Hose Connections .

Protected by copyright. Copying for private or commercial purposes, in part or in whole, is not permitted unless authorized by AUDI AG. AUDI AG does not guarantee or accept any liability with respect to the correctness of information in this document. Copyright by AUDI AG.

cardiagn.com

3 Special Tools

Special tools and workshop equipment required

- Elbow Assembly Tool - T10118-

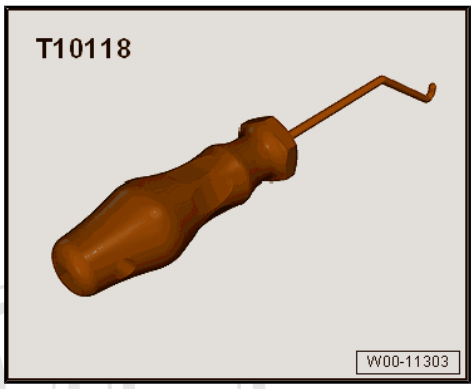

Protected by copyright. Copying for private or commercial purposes, in part or in whole, is not permitted unless authorised by AUDI AG. AUDI AG does not guarantee or accept any liability with respect to the correctness of information in this document. Copyright by AUDI AG.

cardiagn.com

23 – Diesel Fuel Injection

1 Injection System

⇒ “1.1 Schematic Overview - Fuel System”, page 219

⇒ “1.2 Component Location Overview - Injection System”, page 220

⇒ “1.3 Fuel System, Filling/Bleeding”, page 225

⇒ “1.4 Fuel System Leak Test”, page 225

1.1 Schematic Overview - Fuel System

1 - Fuel Injector

2 - High Pressure Reservoir (Rail)

- ❑ For cylinder bank 1 (right)

3 - Fuel Temperature Sensor - G81-

4 - Fuel Filter

5 - Fuel Tank

- ❑ With the Transfer Fuel Pump - G6-
- ❑ Overview. Refer to ⇒ Fuel Supply System; Rep. Gr. 20 ; Fuel Tank; Overview - Fuel Tank .

6 - Fuel Metering Valve - N290-

7 - High Pressure Pump

8 - Fuel Pressure Sensor - G247-

9 - High Pressure Reservoir (Rail)

- ❑ For cylinder bank 2 (left)

10 - Fuel Injector

11 - Restrictor

- ❑ There is residual pressure in the fuel return hoses

12 - Fuel Pressure Regulator Valve - N276-

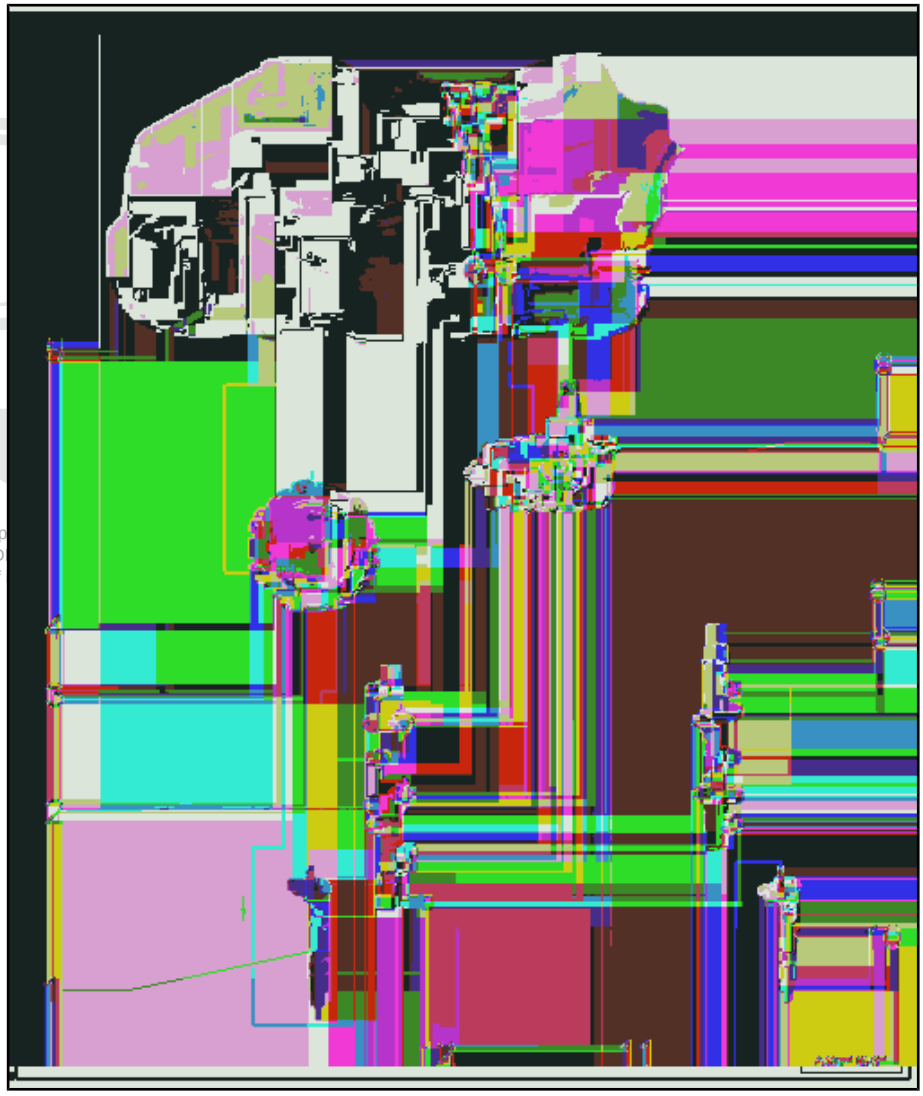

Protected by copyright. Copying for private or commercial purposes, in part or in whole, is not permitted unless authorised by AUDI AG. AUDI AG does not guarantee or accept any liability with respect to the correctness of information in this document. Copyright by AUDI AG.

cardiagn.com

1.2 Component Location Overview - Injection System

Engine Compartment

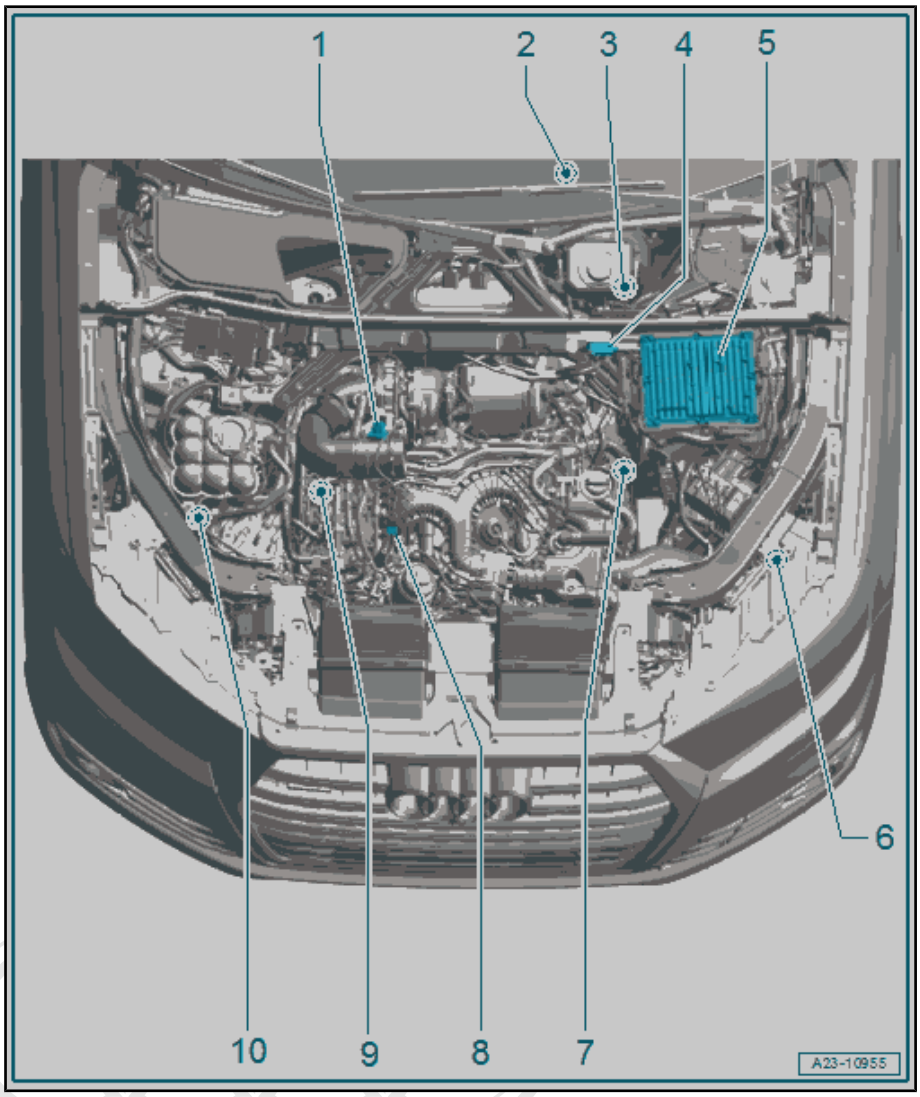

1 - Mass Airflow Sensor - G70-

- ❑ Overview. Refer to ⇒ “3.1 Overview - Air Filter Housing”, page 228 .

2 - Accelerator Pedal Module - GX2-

- ❑ With Accelerator Pedal Position Sensor - G79- / Accelerator Pedal Position Sensor 2 - G185-
- ❑ Vehicle with high-voltage system additionally with Active Accelerator Pedal Control Module - J1115-
- ❑ Component location. Refer to ⇒ Fig. “” Accelerator Pedal Position Sensor - G79- / Accelerator Pedal Position Sensor 2 - G185- Component Location”“ , page 221 .

3 - Brake Lamp Switch - F-

- ❑ Only for vehicle without high-voltage system
- ❑ Component location. Refer to ⇒ Fig. “” Brake Lamp Switch -F- Component Location”“ , page 221 .

4 - Differential Pressure Sensor - G505-

- ❑ Overview. Refer to ⇒ “8.1 Overview - Heated Oxygen Sensor”, page 247 .

5 - Engine Control Module - J623-

- ❑ Removing and installing. Refer to ⇒ “9.2 Engine Control Module J623 , Removing and Installing”, page 253 .

6 - Intake Air Temperature Sensor - G42-

- ❑ Component location. Refer to ⇒ Fig. “” Intake Air Temperature Sensor -G42- Component Location”“ , page 222 .

7 - Electrohydraulic Engine Mount Solenoid Valve/Left Subframe Mount Actuator

- ❑ Vehicle without high-voltage system

- ♦ Left Electrohydraulic Engine Mount Solenoid Valve - N144- in the engine mount. Refer to ⇒ Fig. ““Engine Mount Component Location/Engine Mount Actuator”“ , page 222 .
  - ❑ Vehicle with high-voltage system
- ♦ Subframe Mount Actuator 2 - N514- in the engine mount. Refer to ⇒ Fig. ““Engine Mount Component Location/Engine Mount Actuator”“ , page 222 .
- ♦ Subframe Mount Sensor 1 - G748- on the engine mount. Refer to ⇒ Fig. ““Subframe Mount Sensor Component Location”“ , page 222 .

Protected by copyright. Copying for private or commercial purposes, in part or in whole, is not permitted unless authorised by AUDI AG. AUDI AG does not guarantee or accept any liability with respect to the correctness of information in this document. Copyright by AUDI AG.

cardiagn.com

8 - Air Filter Bypass Door Valve - N275-

❑ Clipped onto the air filter housing

9 - Electrohydraulic Engine Mount Solenoid Valve/Right Subframe Mount Actuator

❑ Vehicle without high-voltage system

- Right Electrohydraulic Engine Mount Solenoid Valve - N145- in the engine mount. Refer to ⇒ Fig. ""Engine Mount Component Location/Engine Mount Actuator"" , page 222 .

❑ Vehicle with high-voltage system

- Subframe Mount Actuator 1 - N513- in the engine mount. Refer to ⇒ Fig. ""Engine Mount Component Location/Engine Mount Actuator"" , page 222 .
- Subframe Mount Sensor 2 - G749- on the engine mount. Refer to ⇒ Fig. ""Subframe Mount Sensor Component Location"" , page 222 .

10 - Coolant Recirculation Pump - V50-

Accelerator Pedal Position Sensor - G79- / Accelerator Pedal Position Sensor 2 - G185- Component Location

- Integrated in the accelerator pedal module -3-. Faulty accelerator pedal position sensors cannot be replaced separately.

Overview. Refer to ⇒ Fuel Supply System; Rep. Gr. 20 ; Accelerator Pedal Mechanism; Overview - Accelerator Pedal Module .

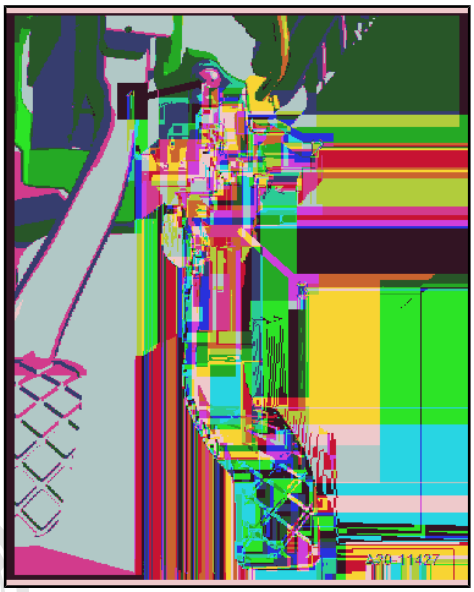

Brake Lamp Switch - F- Component Location

- In the engine compartment on the brake master cylinder.

1 - Brake Lamp Switch - F- Connector

Overview. Refer to ⇒ Brake System; Rep. Gr. 47 ; Brake Booster/Brake Master Cylinder; Overview - Brake Booster/Brake Master Cylinder .

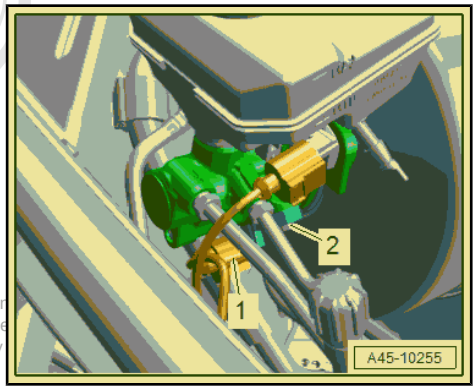

Protected by copyright. Copying for private or commercial purposes, in part or in
permitted unless authorised by AUDI AG. AUDI AG does not guarantee or acce
with respect to the correctness of information in this document. Copyright by

cardiagn.com

Intake Air Temperature Sensor - G42- Component Location

Versions with Charge Air Cooler in Center:

- On the air duct pipe.

2 - Connector for Intake Air Temperature Sensor - G42-

Overview. Refer to
⇒ “2.1.1 Overview - Charge Air System, Center Charge Air Cooler”, page 209 .

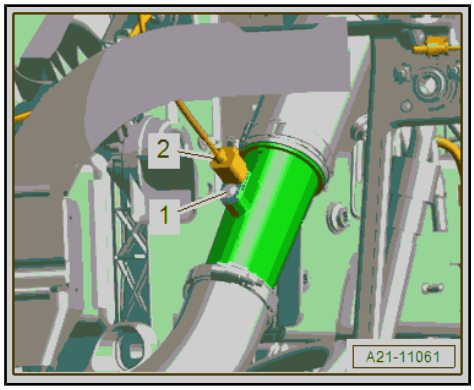

Versions with Side Charge Air Coolers:

- On the left charge air cooler.

Overview. Refer to
⇒ “2.1.2 Overview - Charge Air System, Left Charge Air Cooler”, page 210 .

Engine Mount Component Location/Engine Mount Actuator

- Integrated in the engine mount.

3 - Solenoid Valve Connector/Solenoid Valve Actuator

Overview. Refer to
⇒ “2.1 Overview - Subframe Mount”, page 61 .

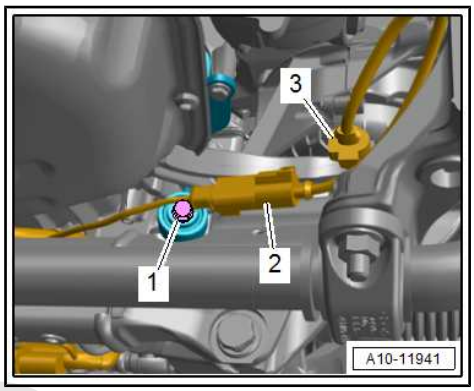

Subframe Mount Sensor Component Location

- On the engine mount.

1 - Connector for Subframe Mount Sensor

Overview. Refer to
⇒ “2.1 Overview - Subframe Mount”, page 61 .

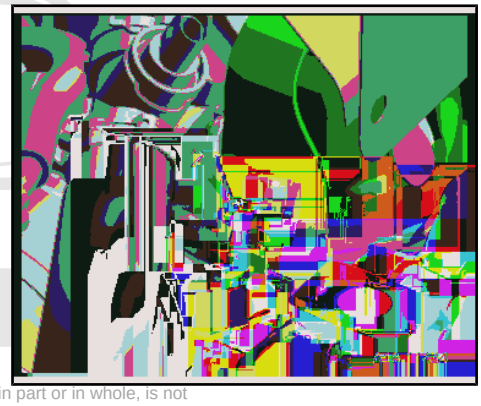

Engine Top

Protected by copyright. Copying for private or commercial purposes, in part or in whole, is not permitted unless authorised by AUDI AG. AUDI AG does not guarantee or accept any liability with respect to the correctness of information in this document. Copyright by AUDI AG.

cardiagn.com

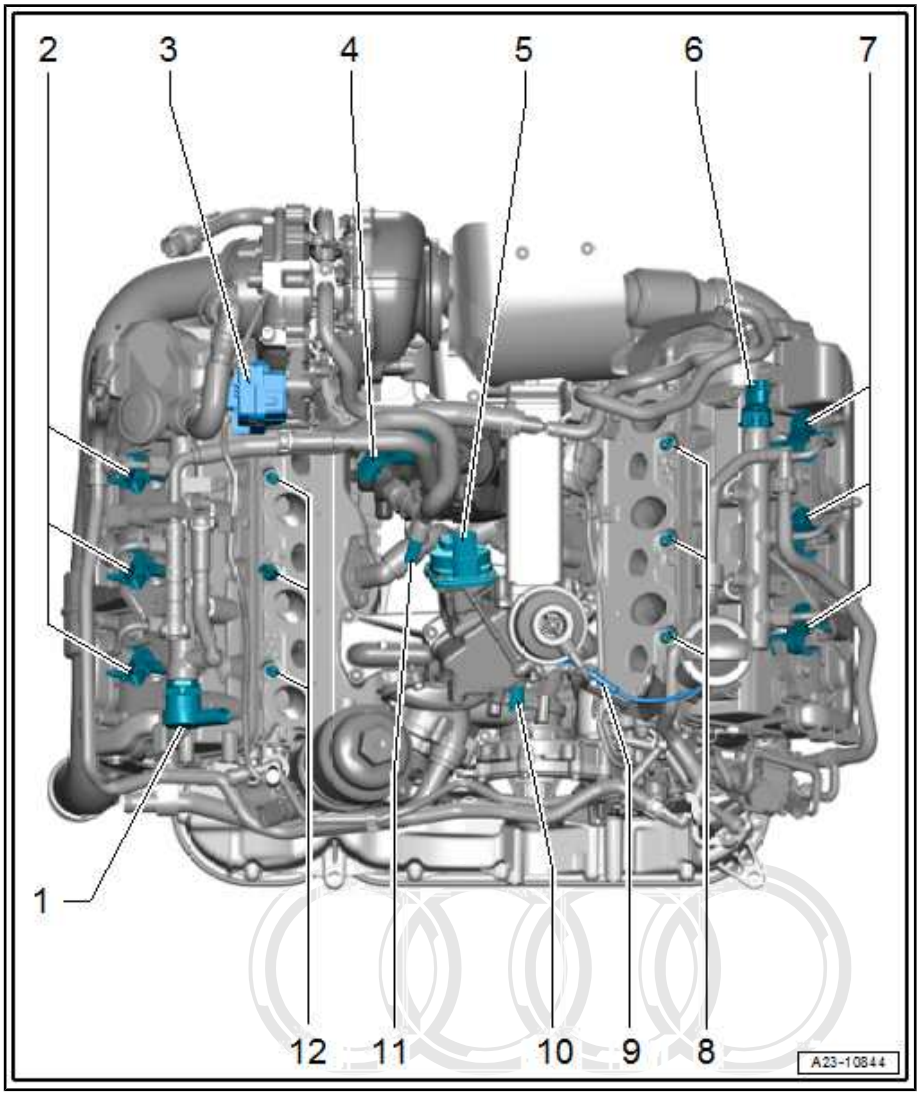

1 - Fuel Pressure Regulator Valve - N276-

2 - Cylinder Bank 1 Fuel Injectors (Right)

- Cylinder 1 Fuel Injector - N30-
- Cylinder 2 Fuel Injector - N31-
- Cylinder 3 Fuel Injector - N32-
  - ❑ Overview. Refer to ⇒ “5.1 Overview - Fuel Injectors”, page 235 .

3 - Turbocharger Control Module 1 - J724-

- ❑ On the turbocharger
- ❑ Overview. Refer to ⇒ “1.1 Overview - Turbocharger”, page 206 .

4 - Fuel Metering Valve - N290-

5 - EGR Motor - V338-

- ❑ With the EGR Potentiometer - G212-
- ❑ Overview. Refer to ⇒ “5.1.1 Overview - Exhaust Gas Recirculation (EGR), Versions without Auxiliary Radiator”, page 286 .

6 - Fuel Pressure Sensor - G247-

- ❑ Removing and installing. Refer to ⇒ “6.4 Fuel Pressure Sensor G247 , Removing and Installing”, page 242 .

7 - Cylinder Bank 2 Fuel Injectors (Left)

- Cylinder 6 Fuel Injector - N84-
- Cylinder 5 Fuel Injector - N83-
- Cylinder 4 Fuel Injector - N33-
  - ❑ Overview. Refer to ⇒ “5.1 Overview - Fuel Injectors”, page 235 .

8 - Cylinder Bank 2 Glow Plugs (Left)

- Glow Plug 6 - Q15-
- Glow Plug 5 - Q14-
- Glow Plug 4 - Q13-
  - ❑ Overview. Refer to ⇒ “1.1 Overview - Glow Plug System”, page 298 .

9 - EGR Temperature Sensor - G98-

- ❑ Overview. Refer to ⇒ “5.1.1 Overview - Exhaust Gas Recirculation (EGR), Versions without Auxiliary Radiator”, page 286 .

10 - Engine Coolant Temperature Sensor - G62-

- ❑ Overview. Refer to ⇒ “2.5 Overview - Engine Coolant Temperature Sensor”, page 160 .

Protected by copyright. Copying for private or commercial purposes, in part or in whole, is not permitted unless authorised by AUDI AG. AUDI AG does not guarantee or accept any liability with respect to the correctness of information in this document. Copyright by AUDI AG.
cardiagn.com

11 - Fuel Temperature Sensor - G81-

12 - Cylinder Bank 1 Glow Plugs (Right)

- Glow Plug 1 - Q10-
- Glow Plug 2 - Q11-
- Glow Plug 3 - Q12-
  - ❑ Overview. Refer to ⇒ “1.1 Overview - Glow Plug System”, page 298 .

Engine Front

1 - Map Controlled Engine Cooling Thermostat - F265-

2 - Oil Temperature Sensor 2 - G664-

- ❑ Overview. Refer to ⇒ “1.2 Overview - Belt Pulley Side Sealing Flange”, page 91 .

3 - Oil Pressure Sensor - G10-

4 - Coolant Temperature Sensor 2 - G802-

- ❑ Overview. Refer to ⇒ “2.5 Overview - Engine Coolant Temperature Sensor”, page 160 .

5 - EGR Cooling Bypass Valve 2 - N387-

6 - Intake Flap Motor - V157-

- ❑ Overview. Refer to ⇒ “4.1 Overview - Intake Manifold”, page 231 .

7 - Charge Air Pressure Sensor - G31-

- ❑ Overview. Refer to ⇒ “4.1 Overview - Intake Manifold”, page 231 .

8 - Throttle Valve Control Module - J338-

- ❑ Overview. Refer to ⇒ “4.1 Overview - Intake Manifold”, page 231 .

9 - Cylinder Head Coolant Valve - N489-

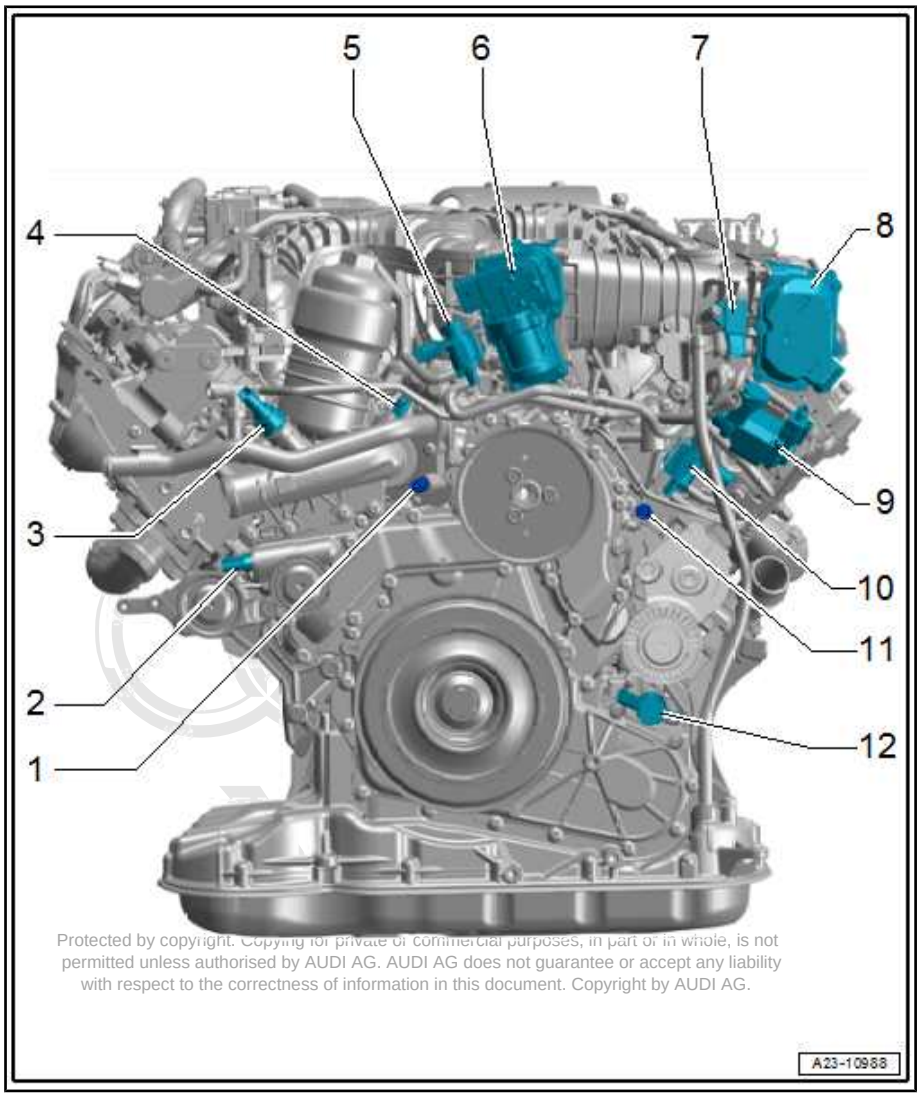

Protected by copyright. Copying for private or commercial purposes, in part or in whole, is not permitted unless authorised by AUDI AG. AUDI AG does not guarantee or accept any liability with respect to the correctness of information in this document. Copyright by AUDI AG.

10 - EGR Cooler Switch-Over Valve - N345-

11 - Engine Temperature Control Sensor - G694-

12 - Oil Pressure Regulation Valve - N428-

- ❑ Overview. Refer to ⇒ “1.1 Overview - Oil Pan/Oil Pump”, page 117 .

Engine Right

cardiagn.com

1 - Engine Speed Sensor - G28-

- ❑ Overview. Refer to ⇒ “1.1 Overview - Glow Plug System”, page 298 .

2 - Low Fuel Pressure Sensor - G410-

3 - Camshaft Position Sensor - G40-

- ❑ Overview. Refer to ⇒ “1.1 Overview - Glow Plug System”, page 298 .

4 - Oil Level Thermal Sensor - G266-

- ❑ Overview. Refer to ⇒ “1.1 Overview - Oil Pan/Oil Pump”, page 117 .

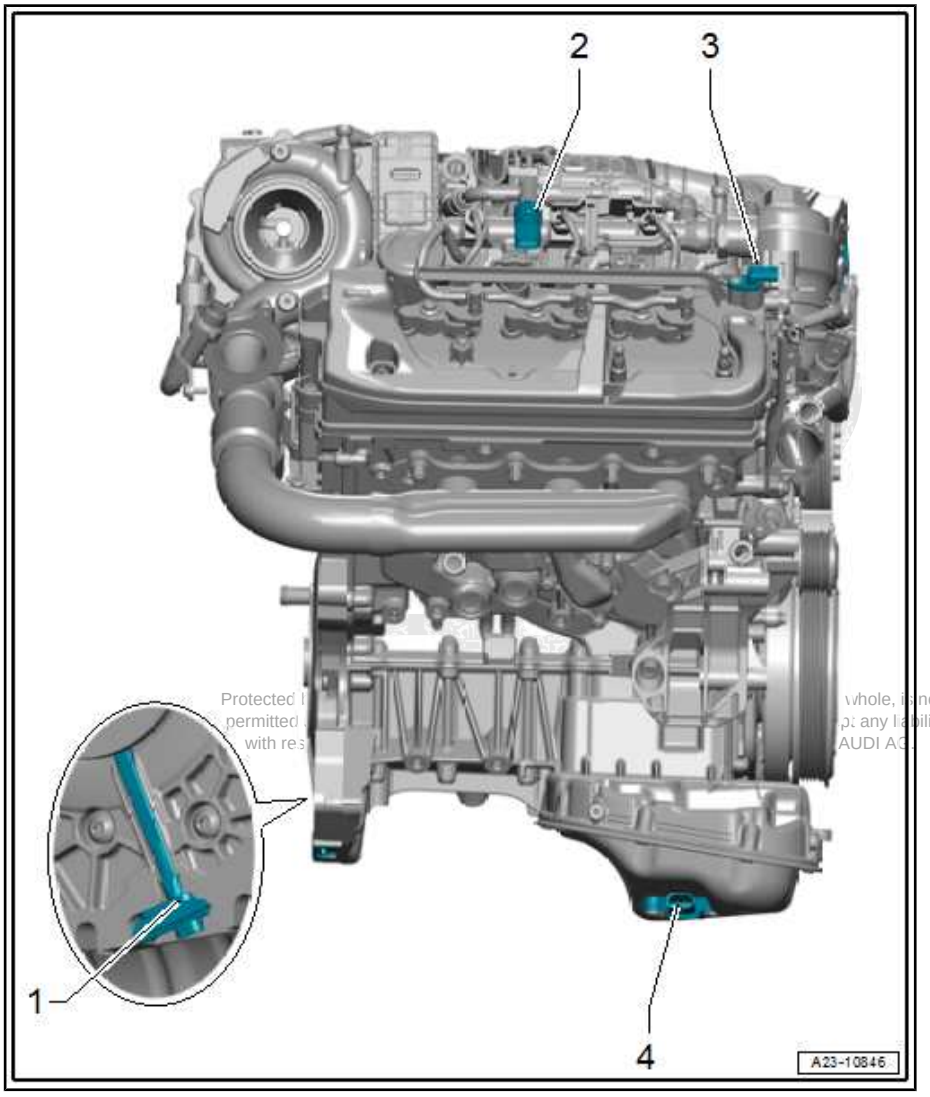

Protected
permitted
with res
whole, is not
any liability
AUDI AG

1.3 Fuel System, Filling/Bleeding

All procedures are described. Refer to ⇒ Servicing – 6-Cylinder TDI Common Rail Engine; Rep. Gr. 23 ; Injection System; Fuel System, Filling and Bleeding .

1.4 Fuel System Leak Test

All procedures are described. Refer to ⇒ Servicing – 6-Cylinder TDI Common Rail Engine; Rep. Gr. 23 ; Injection System; Fuel System Leak Test .

cardiagn.com

2 Vacuum System

⇒ “2.1 Connection Diagram - Vacuum System”, page 226

⇒ “2.2 Vacuum System, Checking”, page 227

2.1 Connection Diagram - Vacuum System

1 - Vacuum Actuator

- For air filter bypass door

2 - Vacuum Hose

- From the Air Filter Bypass Door Valve - N275- to the air filter bypass door

3 - EGR Cooling Bypass Valve 2 - N387-

- For versions with EGR auxiliary cooler

4 - Air Filter Bypass Door Valve - N275-

5 - EGR Cooler Switch-Over Valve - N345-

6 - Vacuum Actuator

- On the EGR cooler

7 - Vacuum Hose

- From the EGR Cooler Switch-Over Valve - N345- to the vacuum actuator on the EGR cooler

8 - Vacuum Actuator

- On the coolant shut-off valve

9 - Vacuum Line

- From the Cylinder Head Coolant Valve - N489- to the vacuum actuator on the coolant shut-off valve

10 - Cylinder Head Coolant Valve - N489-

11 - Vacuum Supply Hose

- With check valve
- From the vacuum pump to the brake booster

12 - Vacuum Supply Hose

- With check valve
- To the Cylinder Head Coolant Valve - N489- , Air Filter Bypass Door Valve - N275- and EGR Cooler Switch-Over Valve - N345-

13 - Vacuum Hose

- From EGR Cooling Bypass Valve 2 - N387- to vacuum actuator on the EGR auxiliary cooler

14 - Vacuum Actuator

- For versions with EGR auxiliary cooler

cardiagn.com

2.2 Vacuum System, Checking

Special tools and workshop equipment required

- Hand Vacuum Pump - VAS6213-

Procedure

– Check all vacuum lines in the entire vacuum system for:

- Cracks
- Damage caused by animals
- Pinching
- Porous locations and other leaks

– Check the vacuum line leading both to and from the solenoid valve to the respective component.

– If there is a DTC memory entry, check the vacuum lines for the named component, but also check all the vacuum lines.

– If using the -VAS6213- does not produce any vacuum or if the vacuum drops again right away, then check the hand vacuum pump and the connection hoses for leaks.

Protected by copyright. Copying for private or commercial purposes, in part or in whole, is not permitted unless authorised by AUDI AG. AUDI AG does not guarantee or accept any liability with respect to the correctness of information in this document. Copyright by AUDI AG.

cardiagn.com

3 Air Filter

⇒ “3.1 Overview - Air Filter Housing”, page 228

⇒ “3.2 Air Filter Housing, Removing and Installing”, page 229

3.1 Overview - Air Filter Housing

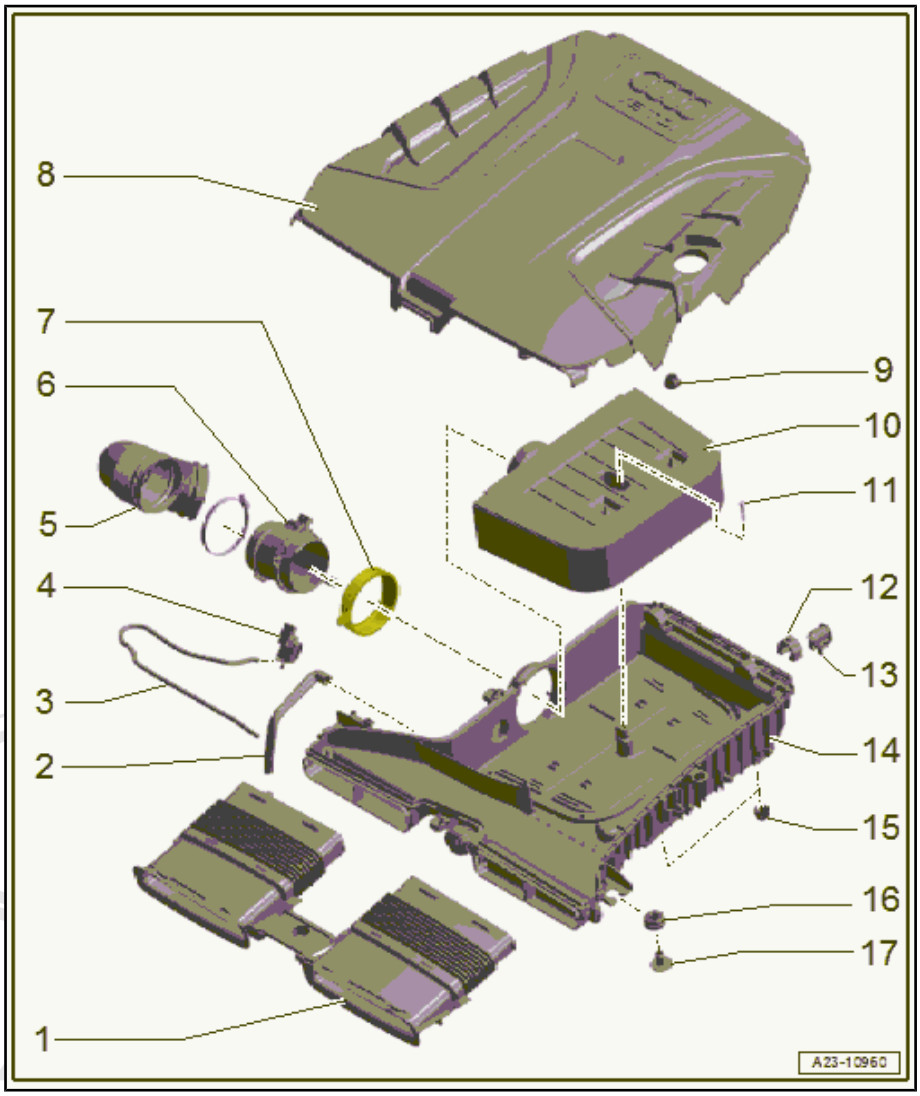

1 - Air Duct

- ❑ On the lock carrier
- ❑ Remove any dirt, leaves and salt residue.

2 - Water Drain Hose

- ❑ Clean

3 - Vacuum Hose

- ❑ From the Air Filter By-pass Door Valve - N275- to the air filter bypass door

4 - Air Filter Bypass Door Valve - N275-

- ❑ Clipped onto the air filter lower section

5 - Air Duct Pipe

- ❑ Tightening specification for hose clamps. Refer to ⇒ Servicing – 6-Cylinder TDI Common Rail Engine; Rep. Gr. 21 ; Charge Air System; Overview - Charge Air Hose Connections .

6 - Mass Airflow Sensor - G70-

- ❑ Removing and installing. Refer to ⇒ “6.2 Mass Airflow Sensor G70 , Removing and Installing”, page 241 .

7 - Seal

- ❑ Replace if damaged

8 - Air Filter Upper Section

- ❑ Clean off any salt and dirt
- ❑ Removing and installing. Refer to ⇒ “3.2 Air Filter Housing, Removing and Installing”, page 229 .

Protected by copyright. Copying for private or commercial purposes, in part or in whole, is not permitted unless authorised by AUDI AG. AUDI AG does not guarantee or accept any liability with respect to the correctness of information in this document. Copyright by AUDI AG.

9 - Grommet

10 - Air Filter Element

- ❑ Use an original air filter element. Refer to the Parts Catalog.
- ❑ Replacement intervals. Refer to the ⇒ Maintenance Intervals; Rep. Gr. 03
- ❑ Removing and installing. Refer to ⇒ Maintenance ; Booklet 413 .

11 - Bolt

- ❑ 3.5 Nm

12 - Stop Buffer

- ❑ Replace if damaged

cardiagn.com

13 - Mount

- ❑ For the air filter housing

14 - Air Filter Lower Section

- ❑ Remove any dirt, leaves and salt residue.
- ❑ Removing and installing. Refer to ⇒ “3.2 Air Filter Housing, Removing and Installing”, page 229 .

15 - Grommet

16 - Grommet

17 - Mount

- ❑ For the air filter housing

3.2 Air Filter Housing, Removing and Installing

Removing

– Open the left and right clip in the direction of -arrow B-.

– Remove the air filter upper section -1- in the center toward the rear from the ball pins in the direction of -arrow A- and disengage from the air filter lower section.

– Remove the air filter upper section.

Protected by copyright. Copying for private or commercial purposes, in pa
permitted unless authorized by AUDI AG. AUDI AG does not guarantee o
with respect to the correctness of information in this document. Copyrig

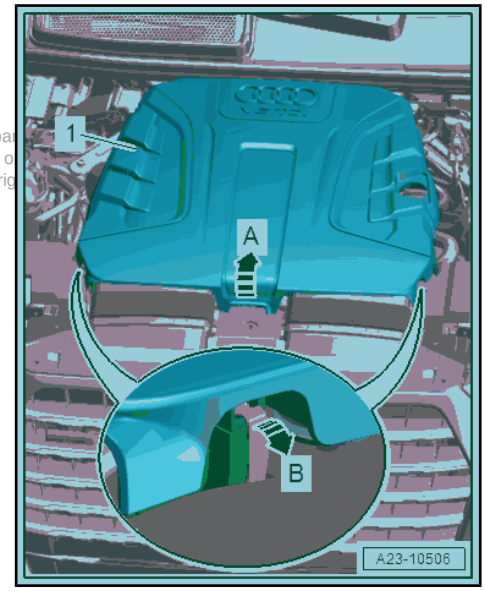

– Disconnect the connectors and free up the wires.

2 - For the Mass Airflow Sensor - G70-

3 - For the Air Filter Bypass Door Valve - N275-

– Loosen the hose clamp -1- and remove the air duct pipe.

– Disconnect the vacuum hose -4-.

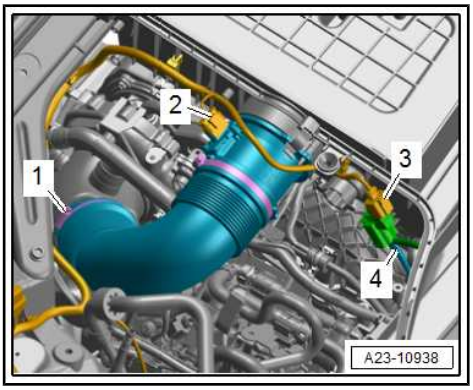

cardiagn.com

– Release the retainer in the direction of -arrow- and oil filler tube -1- upward from the air filter lower section -2-.

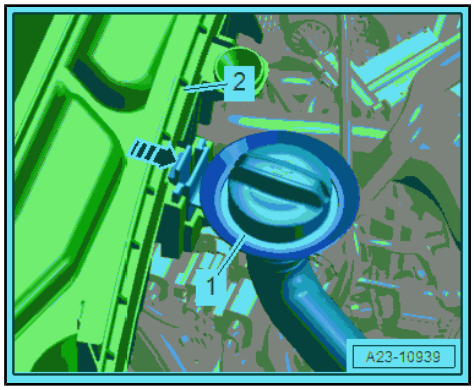

– Release the retainer in the direction of -arrow A- and remove the air ducts -1- from the air filter lower section -2-.

– Remove the front air filter lower section from the ball pin upward in direction of -B arrows- and then remove the rear mount toward the front in direction of -C arrows-.

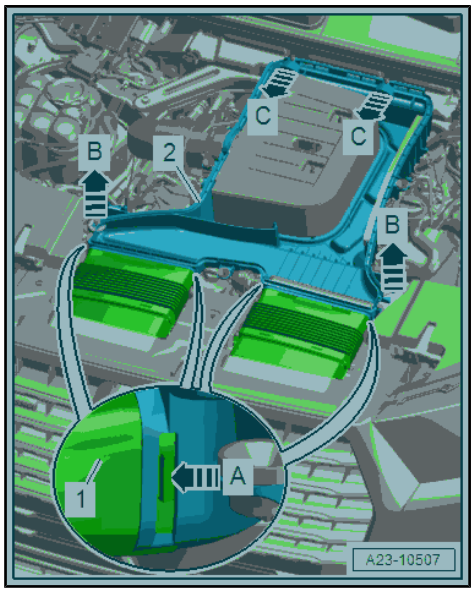

Installing

- The air filter housing must always be clean.
- To avoid malfunctions, the critical airflow components such as the mass airflow sensor, air duct pipes, etc. must be covered with a clean cloth when blowing out the air filter housing with compressed air.
- The hose connections as well as air duct pipes and hoses must be free of oil and grease before installing.
- Use a silicone-free lubricant for installing the air duct hoses.
- Secure all hose connections with hose clamps that match the ones used in series production. Refer to the arts Catalog.

– Check the air duct pipe (intake air side) for salt residue, dirt and leaves.

– Check the air duct from the lock carrier to the air filter housing for dirt and leaves.

Install in reverse order of removal.

– Do not hit the air filter upper section with a fist or a tool to avoid damaging it.

– Insert the air filter upper section into the back of the air filter lower section and use both hands to push it onto the retaining pins.

– Secure the air filter upper section with the clips.

Tightening Specifications

♦ Refer to ⇒ Servicing – 6-Cylinder TDI Common Rail Engine; Rep. Gr. 21 ; Charge Air System; Overview - Charge Air Hose Connections .

Protected by copyright. Copying for private or commercial purposes, in part or in whole, is not permitted unless authorised by AUDI AG. AUDI AG does not guarantee or accept any liability with respect to the correctness of information in this document. Copyright by AUDI AG.

cardiagn.com

4 Intake Manifold

⇒ “4.1 Overview - Intake Manifold”, page 231

⇒ “4.2 Intake Manifold Upper Section, Removing and Installing”, page 233

⇒ “4.3 Intake Manifold Lower Section, Removing and Installing”, page 234

⇒ “4.4 Intake Flap Motor V157 , Removing and Installing”, page 234

⇒ “4.5 Throttle Valve Control Module J338 , Removing and Installing”, page 234

4.1 Overview - Intake Manifold

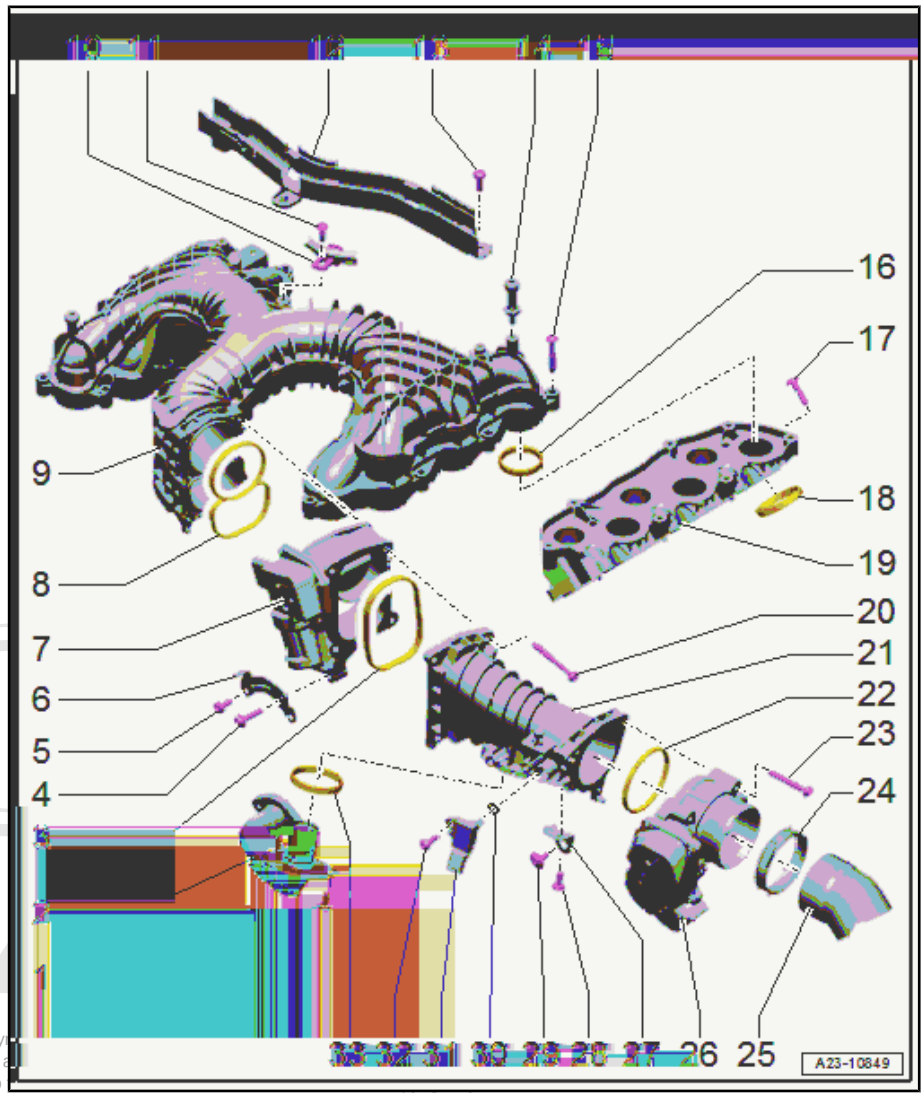

1 - Bolt

- ❑ Tightening specifications. Refer to ⇒ Servicing – 6-Cylinder TDI Common Rail Engine; Rep. Gr. 23 ; Intake Manifold, Overview - Intake Manifold .

2 - Pipe

- ❑ For the EGR

3 - Seal

- ❑ Installation instructions. Refer to ⇒ Servicing – 6-Cylinder TDI Common Rail Engine; Rep. Gr. 23 ; Intake Manifold, Overview - Intake Manifold .

4 - Bolt

- ❑ Tightening specifications. Refer to ⇒ Servicing – 6-Cylinder TDI Common Rail Engine; Rep. Gr. 23 ; Intake Manifold, Overview - Intake Manifold .

5 - Bolt

- ❑ Tightening specifications. Refer to ⇒ Servicing – 6-Cylinder TDI Common Rail Engine; Rep. Gr. 23 ; Intake Manifold, Overview - Intake Manifold .

Protected by copy
permitted unless
with respect to

6 - Bracket

- ❑ For the air duct pipe

7 - Intake Flap Motor - V157-

- ❑ Removing and installing. Refer to ⇒ “4.4 Intake Flap Motor V157 , Removing and Installing”, page 234 .

8 - Seal

- ❑ Installation instructions. Refer to ⇒ Servicing – 6-Cylinder TDI Common Rail Engine; Rep. Gr. 23 ; Intake Manifold, Overview - Intake Manifold .

cardiagn.com

9 - Intake Manifold Upper Section

- ❑ Removing and installing. Refer to ⇒ “4.2 Intake Manifold Upper Section, Removing and Installing”, page 233 .

10 - Bracket

- ❑ For the high pressure line

11 - Bolt

- ❑ Tightening specifications. Refer to ⇒ Servicing – 6-Cylinder TDI Common Rail Engine; Rep. Gr. 23 ; Intake Manifold, Overview - Intake Manifold .

12 - Cable Guide

13 - Bolt

- ❑ Tightening specifications. Refer to ⇒ Servicing – 6-Cylinder TDI Common Rail Engine; Rep. Gr. 23 ; Intake Manifold, Overview - Intake Manifold .

14 - Mounting Pins

- ❑ Tightening specifications. Refer to ⇒ Servicing – 6-Cylinder TDI Common Rail Engine; Rep. Gr. 23 ; Intake Manifold, Overview - Intake Manifold .

15 - Bolt

- ❑ Tightening specifications. Refer to ⇒ Servicing – 6-Cylinder TDI Common Rail Engine; Rep. Gr. 23 ; Intake Manifold, Overview - Intake Manifold .

Protected by copyright. Copying for private or commercial purposes, in part or in whole, is not permitted unless authorised by AUDI AG. AUDI AG does not guarantee or accept any liability with respect to the correctness of information in this document. Copyright by AUDI AG.

16 - Seal

- ❑ Installation instructions. Refer to ⇒ Servicing – 6-Cylinder TDI Common Rail Engine; Rep. Gr. 23 ; Intake Manifold, Overview - Intake Manifold .

17 - Bolt

- ❑ Tightening specifications. Refer to ⇒ Servicing – 6-Cylinder TDI Common Rail Engine; Rep. Gr. 23 ; Intake Manifold, Overview - Intake Manifold .

18 - Seal

- ❑ Installation instructions. Refer to ⇒ Servicing – 6-Cylinder TDI Common Rail Engine; Rep. Gr. 23 ; Intake Manifold, Overview - Intake Manifold .

19 - Intake Manifold Lower Section

- ❑ Removing and installing. Refer to ⇒ Servicing – 6-Cylinder TDI Common Rail Engine; Rep. Gr. 23 ; Intake Manifold; Intake Manifold Lower Section, Removing and Installing .

20 - Bolt

- ❑ Tightening specifications. Refer to ⇒ Servicing – 6-Cylinder TDI Common Rail Engine; Rep. Gr. 23 ; Intake Manifold, Overview - Intake Manifold .

21 - Air Duct Pipe

22 - Seal

- ❑ Installation instructions. Refer to ⇒ Servicing – 6-Cylinder TDI Common Rail Engine; Rep. Gr. 23 ; Intake Manifold, Overview - Intake Manifold .

23 - Bolt

- ❑ Tightening specifications. Refer to ⇒ Servicing – 6-Cylinder TDI Common Rail Engine; Rep. Gr. 23 ; Intake Manifold, Overview - Intake Manifold .

24 - Screw-Type Clamp

- ❑ Tightening specifications. Refer to ⇒ Servicing – 6-Cylinder TDI Common Rail Engine; Rep. Gr. 21 ; Charge Air System; Overview - Charge Air Hose Connections .

25 - Air Duct Hose

26 - Throttle Valve Control Module - J338-

- ❑ Removing and installing. Refer to ⇒ “4.5 Throttle Valve Control Module J338 , Removing and Installing”, page 234 .

27 - Bracket

- ❑ For the air duct pipe

cardiagn.com

28 - Bolt

- ❑ Tightening specifications. Refer to ⇒ Servicing – 6-Cylinder TDI Common Rail Engine; Rep. Gr. 23 ; Intake Manifold, Overview - Intake Manifold .

29 - Bolt

- ❑ Tightening specifications. Refer to ⇒ Servicing – 6-Cylinder TDI Common Rail Engine; Rep. Gr. 23 ; Intake Manifold, Overview - Intake Manifold .

30 - O-ring

- ❑ Installation instructions. Refer to ⇒ Servicing – 6-Cylinder TDI Common Rail Engine; Rep. Gr. 23 ; Intake Manifold, Overview - Intake Manifold .

31 - Charge Air Pressure Sensor - G31-

- ❑ Removing and installing. Refer to ⇒ “2.4 Charge Air Pressure Sensor G31 , Removing and Installing”, page 216 .

32 - Bolt

- ❑ Tightening specifications. Refer to ⇒ Servicing – 6-Cylinder TDI Common Rail Engine; Rep. Gr. 23 ; Intake Manifold, Overview - Intake Manifold .

33 - Seal

- ❑ Installation instructions. Refer to ⇒ Servicing – 6-Cylinder TDI Common Rail Engine; Rep. Gr. 23 ; Intake Manifold, Overview - Intake Manifold .

4.2 Intake Manifold Upper Section, Removing and Installing

Removing

– Remove the air filter housing. Refer to ⇒ “3.2 Air Filter Housing, Removing and Installing”, page 229 .

– Remove the front noise insulation. Refer to ⇒ Body Exterior; Rep. Gr. 66 ; Noise Insulation; Noise Insulation, Removing and Installing .

– Remove the upper reinforcement brace. Refer to ⇒ Body Exterior; Rep. Gr. 50 ; Lock Carrier; Lock Carrier, Removing and Installing .

– Remove the right engine cover. Refer to ⇒ “3.1 Engine Cover, Removing and Installing”, page 77 .

All additional procedures are described. Refer to ⇒ Servicing – 6-Cylinder TDI Common Rail Engine; Rep. Gr. 23 ; Intake Manifold; Intake Manifold Upper Section, Removing and Installing .

Installing

Additional procedures:

– Install the engine cover. Refer to ⇒ “3.1 Engine Cover, Removing and Installing”, page 77 .

– Install the air filter housing. Refer to ⇒ “3.2 Air Filter Housing, Removing and Installing”, page 229 .

Protected by copyright. Copying for private or commercial purposes, in part or in whole, is not permitted unless authorised by AUDI AG. AUDI AG does not guarantee or accept any liability with respect to the correctness of information in this document. Copyright by AUDI AG.

Tightening Specifications

◆ Refer to ⇒ Body Exterior; Rep. Gr. 50 ; Lock Carrier; Overview - Lock Carrier .

cardiagn.com

4.3 Intake Manifold Lower Section, Removing and Installing

All procedures are described. Refer to ⇒ Servicing – 6-Cylinder TDI Common Rail Engine; Rep. Gr. 23 ; Intake Manifold; Intake Manifold Lower Section, Removing and Installing .

4.4 Intake Flap Motor - V157- , Removing and Installing

Removing

– Remove the air filter housing. Refer to ⇒ "3.2 Air Filter Housing, Removing and Installing", page 229 .

– Remove the upper reinforcement brace. Refer to ⇒ Body Exterior; Rep. Gr. 50 ; Lock Carrier; Overview - Lock Carrier .

All additional procedures are described. Refer to ⇒ Servicing – 6-Cylinder TDI Common Rail Engine; Rep. Gr. 23 ; Intake Manifold; Intake Flap Motor - V157- , Removing and Installing .

Installing

Additional procedures:

– Install the air filter housing. Refer to ⇒ "3.2 Air Filter Housing, Removing and Installing", page 229 .

Tightening Specifications

◆ Upper reinforcement brace. Refer to ⇒ Body Exterior; Rep. Gr. 50 ; Lock Carrier; Overview - Lock Carrier .

4.5 Throttle Valve Control Module - J338- , Removing and Installing

Removing

– Remove the left engine cover. Refer to ⇒ "3.1 Engine Cover, Removing and Installing", page 77 .

All additional procedures are described. Refer to ⇒ Servicing – 6-Cylinder TDI Common Rail Engine; Rep. Gr. 23 ; Intake Manifold; Throttle Valve Control Module - J338- , Removing and Installing .

Installing

Additional procedures:

– Install the engine cover. Refer to ⇒ "3.1 Engine Cover, Removing and Installing", page 77 .

Protected by copyright. Copying for private or commercial purposes, in part or in whole, is not permitted unless authorised by AUDI AG. AUDI AG does not guarantee or accept any liability with respect to the correctness of information in this document. Copyright by AUDI AG.

cardiagn.com

5 Fuel Injectors/High Pressure Reservoir (Rail)

⇒ "5.1 Overview - Fuel Injectors", page 235

⇒ "5.2 Fuel Injectors, Checking", page 236

⇒ "5.3 Fuel Injectors, Adapting Correction Values", page 236

⇒ "5.4 Open Fuel Injectors, Checking", page 237

⇒ "5.5 Fuel Injectors, Checking Return Quantity with Engine Running", page 237

⇒ "5.6 Fuel Injectors, Checking Return Quantity at Cranking Speed", page 237

⇒ "5.7 Fuel Return Line Restrictor, Checking", page 237

⇒ "5.8 Fuel Injectors, Removing and Installing", page 238

⇒ "5.9 High Pressure Lines, Removing and Installing", page 239

⇒ "5.10 High Pressure Reservoir (Rail), Removing and Installing", page 239

5.1 Overview - Fuel Injectors

Protected by copyright. Copying for private or permitted commercial use is not permitted unless authorized by AUDI AG. AUDI with respect to the correctness of informatio

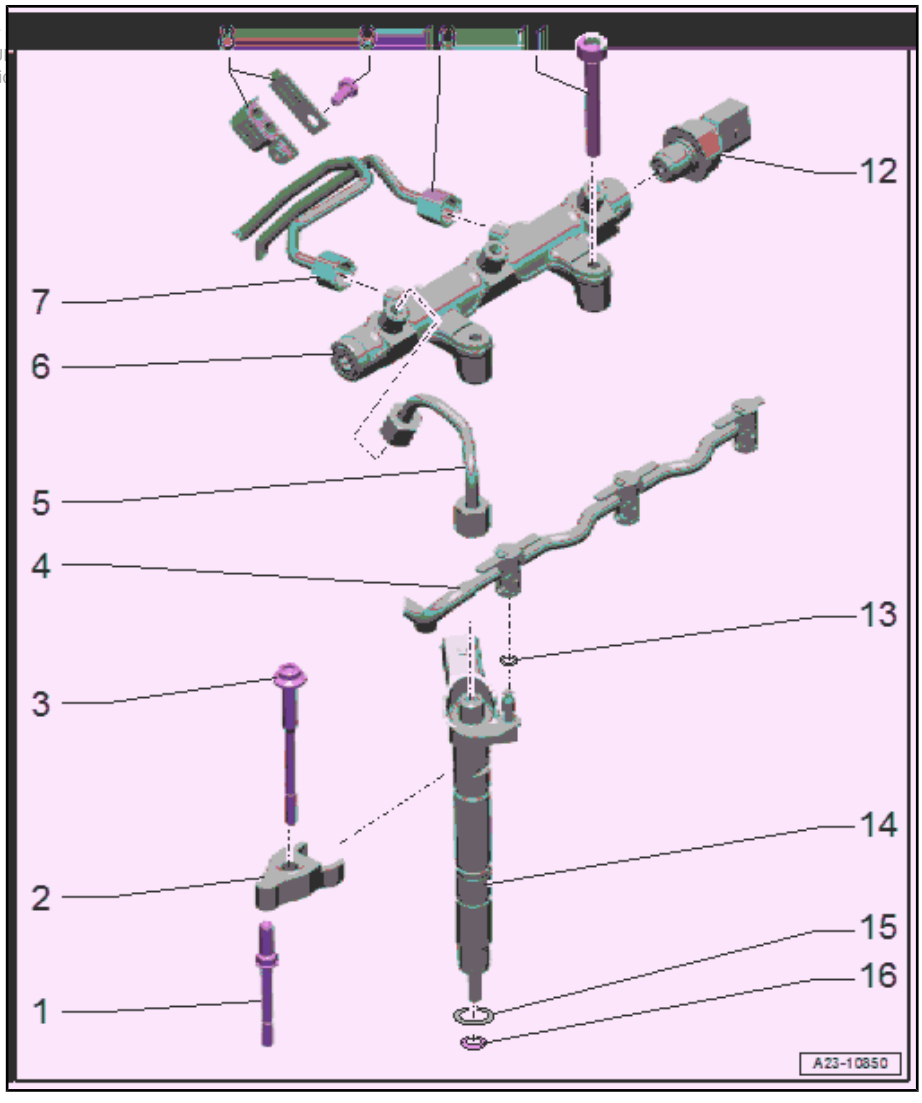

1 - Mounting Bracket

- ❑ For the tensioning claw
- ❑ Tightening specifications. Refer to ⇒ Servicing – 6-Cylinder TDI Common Rail Engine; Rep. Gr. 23 ; Fuel Injectors/High Pressure Reservoir (Rail); Overview - Fuel Injectors (Injectors) .

2 - Tensioning Claw

- ❑ Installation instructions. Refer to ⇒ Servicing – 6-Cylinder TDI Common Rail Engine; Rep. Gr. 23 ; Fuel Injectors/High Pressure Reservoir (Rail); Overview - Fuel Injectors (Injectors) .

3 - Bolt

- ❑ Tightening specifications. Refer to ⇒ Servicing – 6-Cylinder TDI Common Rail Engine; Rep. Gr. 23 ; Fuel Injectors/High Pressure Reservoir (Rail); Overview - Fuel Injectors (Injectors) .

4 - Fuel Return Hose

- ❑ From the fuel injectors
- ❑ Installation instructions. Refer to ⇒ Servicing – 6-Cylinder TDI Com-

cardiagn.com

mon Rail Engine; Rep.
Gr. 23 ; Fuel Injectors/High Pressure Reservoir (Rail); Overview - Fuel Injectors (Injectors) .

5 - High Pressure Line

- ❑ From the high pressure reservoir (rail) to the fuel injector
- ❑ Installation instructions. Refer to ⇒ Servicing – 6-Cylinder TDI Common Rail Engine; Rep. Gr. 23 ; Fuel Injectors/High Pressure Reservoir (Rail); Overview - Fuel Injectors (Injectors) .

6 - High Pressure Reservoir (Rail)

- ❑ Removing and installing. Refer to
⇒ “5.10 High Pressure Reservoir (Rail), Removing and Installing”, page 239 .

7 - High Pressure Line

- ❑ From the high pressure reservoir (rail) on the opposite side
- ❑ Installation instructions. Refer to ⇒ Servicing – 6-Cylinder TDI Common Rail Engine; Rep. Gr. 23 ; Fuel Injectors/High Pressure Reservoir (Rail); Overview - Fuel Injectors (Injectors) .

8 - Clamp

- ❑ For the high pressure line

9 - Bolt

- ❑ Tightening specifications. Refer to ⇒ Servicing – 6-Cylinder TDI Common Rail Engine; Rep. Gr. 23 ; Fuel Injectors/High Pressure Reservoir (Rail); Overview - Fuel Injectors (Injectors) .

10 - High Pressure Line

- ❑ From high pressure pump to high pressure reservoir (rail)
- ❑ Installation instructions. Refer to ⇒ Servicing – 6-Cylinder TDI Common Rail Engine; Rep. Gr. 23 ; Fuel Injectors/High Pressure Reservoir (Rail); Overview - Fuel Injectors (Injectors) .

11 - Bolt

- ❑ Tightening specifications. Refer to ⇒ Servicing – 6-Cylinder TDI Common Rail Engine; Rep. Gr. 23 ; Fuel Injectors/High Pressure Reservoir (Rail); Overview - Fuel Injectors (Injectors) .

12 - Fuel Pressure Sensor - G247-

- ❑ Removing and installing. Refer to
⇒ “6.4 Fuel Pressure Sensor G247 , Removing and Installing”, page 242 .

13 - O-Ring

- ❑ Installation instructions. Refer to ⇒ Servicing – 6-Cylinder TDI Common Rail Engine; Rep. Gr. 23 ; Fuel Injectors/High Pressure Reservoir (Rail); Overview - Fuel Injectors (Injectors) .

14 - Fuel Injector

- ❑ Removing and installing. Refer to ⇒ “5.8 Fuel Injectors, Removing and Installing”, page 238 .

Protected by copyright. Copying for private or commercial purposes, in part or in whole, is not permitted unless authorised by AUDI AG. AUDI AG does not guarantee or accept any liability with respect to the correctness of information in this document. Copyright by AUDI AG.

15 - O-Ring

- ❑ Installation instructions. Refer to ⇒ Servicing – 6-Cylinder TDI Common Rail Engine; Rep. Gr. 23 ; Fuel Injectors/High Pressure Reservoir (Rail); Overview - Fuel Injectors (Injectors) .

16 - Copper Gasket

- ❑ Installation instructions. Refer to ⇒ Servicing – 6-Cylinder TDI Common Rail Engine; Rep. Gr. 23 ; Fuel Injectors/High Pressure Reservoir (Rail); Overview - Fuel Injectors (Injectors) .

5.2 Fuel Injectors, Checking

All procedures are described. Refer to ⇒ Servicing – 6-Cylinder TDI Common Rail Engine; Rep. Gr. 23 ; Fuel Injectors/High Pressure Reservoir (Rail); Fuel Injectors, Checking .

5.3 Fuel Injectors, Adapting Correction Values

All procedures are described. Refer to ⇒ Servicing – 6-Cylinder TDI Common Rail Engine; Rep. Gr. 23 ; Fuel Injectors/High Pressure Reservoir (Rail); Fuel Injectors, Adapting Correction Values .

cardiagn.com

5.4 Open Fuel Injectors, Checking

Procedure

– Remove the corresponding engine cover. Refer to ⇒ “3.1 Engine Cover, Removing and Installing”, page 77 .

– If necessary connect the fuel hoses.

All additional procedures are described. Refer to ⇒ Servicing – 6-Cylinder TDI Common Rail Engine; Rep. Gr. 23 ; Fuel Injectors/ High Pressure Reservoir (Rail); Open Fuel Injectors, Checking .

Assembling

Additional procedures:

– Install the engine covers. Refer to ⇒ “3.1 Engine Cover, Removing and Installing”, page 77 .

Protected by copyright. Copying for private or commercial purposes, in part or in whole, is not permitted unless authorised by AUDI AG. AUDI AG does not guarantee or accept any liability with respect to the correctness of information in this document. Copyright by AUDI AG.

5.5 Fuel Injectors, Checking Return Quantity with Engine Running

Procedure

– Remove the corresponding engine cover. Refer to ⇒ “3.1 Engine Cover, Removing and Installing”, page 77 .

– If necessary connect the fuel hoses.

All additional procedures are described. Refer to ⇒ Servicing – 6-Cylinder TDI Common Rail Engine; Rep. Gr. 23 ; Fuel Injectors/ High Pressure Reservoir (Rail); Fuel Injector Return Quantity, Checking with Engine Running .

Assembling

Additional procedures:

– Install the engine covers. Refer to ⇒ “3.1 Engine Cover, Removing and Installing”, page 77 .

5.6 Fuel Injectors, Checking Return Quantity at Cranking Speed

Procedure

– Remove the corresponding engine cover. Refer to ⇒ “3.1 Engine Cover, Removing and Installing”, page 77 .

– If necessary connect the fuel hoses.

All additional procedures are described. Refer to ⇒ Servicing – 6-Cylinder TDI Common Rail Engine; Rep. Gr. 23 ; Fuel Injectors/ High Pressure Reservoir (Rail); Fuel Injector Return Quantity, Checking with Cranking Speed .

Assembling

Additional procedures:

– Install the engine covers. Refer to ⇒ “3.1 Engine Cover, Removing and Installing”, page 77 .

5.7 Fuel Return Line Restrictor, Checking

Procedure

– Remove the left engine cover. Refer to ⇒ “3.1 Engine Cover, Removing and Installing”, page 77 .

All additional procedures are described. Refer to ⇒ Servicing – 6-Cylinder TDI Common Rail Engine; Rep. Gr. 23 ; Fuel Injectors/

cardiagn.com

High Pressure Reservoir (Rail); Restrictor in Fuel Return Line, Checking .

Assembling

Additional procedures:

– Install the engine cover. Refer to ⇒ “3.1 Engine Cover, Removing and Installing”, page 77 .

5.8 Fuel Injectors, Removing and Installing

Removing

- The securing components for the wires must correspond to the production series. Refer to Parts Catalog.

Cylinder Bank 1 (Right):

– Remove the right engine cover. Refer to ⇒ “3.1 Engine Cover, Removing and Installing”, page 77 .

Cylinder Bank 1 (Right), Fuel Injector Cylinder “1”:

– Remove the fuel filter from the bracket and move it to the side. Refer to ⇒ Fuel Supply System; Rep. Gr. 20 ; Fuel Filter; Fuel Filter, Removing and Installing .

Cylinder Bank 1 (Right), Fuel Injector Cylinder “3”:

– Remove the nuts -arrows-, remove the coolant pipes -1- from the upper threaded pin and pivot slightly forward.

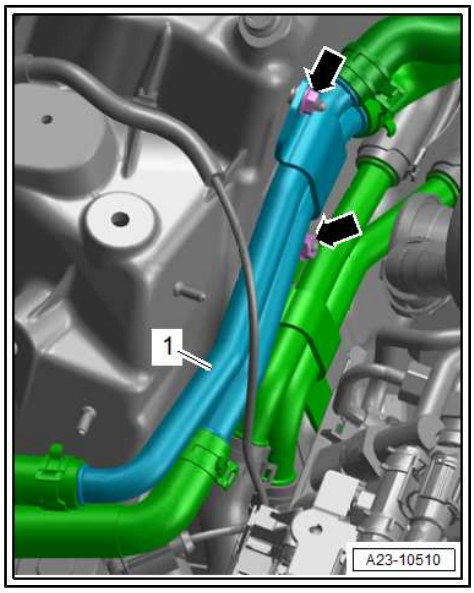

Cylinder Bank 1 (right), Fuel Injector Cylinder “2 and 3”:

– Remove the bolts -1 and 4-.

– Disconnect the connector -3-, remove the coolant expansion tank -2- and move to the side.

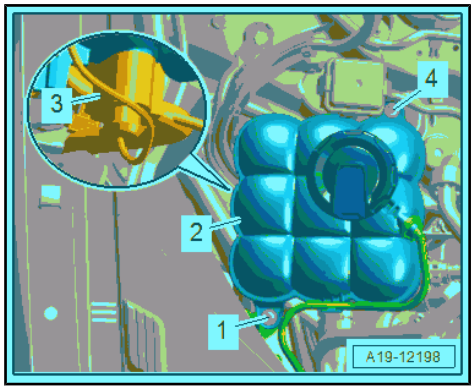

Protected by copyright. Copying for private or commercial purposes, in part or in whole, is not permitted unless authorised by AUDI AG. AUDI AG does not guarantee or accept any liability with respect to the correctness of information in this document. Copyright by AUDI AG.

Cylinder Bank 2 (Left)

– Remove the left engine cover. Refer to ⇒ “3.1 Engine Cover, Removing and Installing”, page 77 .

Cylinder Bank 2 (left), Fuel Injector Cylinder “5”

– Remove the low pressure side refrigerant line. Refer to ⇒ Heating, Ventilation and Air Conditioning; Rep. Gr. 87 ; Refrigerant Circuit .

cardiagn.com

Cylinder Bank 2 (left), Fuel Injector Cylinder "6"

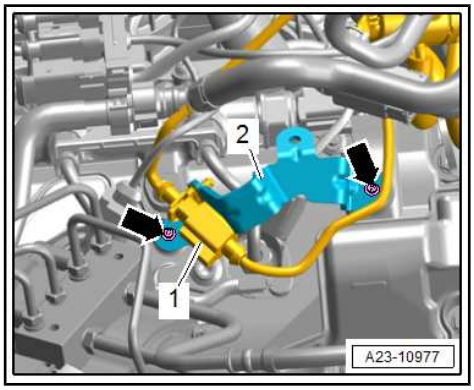

– Free up the connector -1- for the Reducing Agent Injector - N474- from the bracket -2-.

– Free up the wiring harness.

– Remove the bolts -arrows- and the bracket.

All additional procedures are described. Refer to ⇒ Servicing – 6-Cylinder TDI Common Rail Engine; Rep. Gr. 23 ; Fuel Injectors/ High Pressure Reservoir (Rail); Fuel Injectors, Checking .

Installing

Additional procedures:

– Install the right coolant pipe. Refer to ⇒ Fig. ""Right Coolant Pipe - Tightening Specification"" , page 182 .

– Install the fuel filter. Refer to ⇒ Fuel Supply System; Rep. Gr. 20 ; Fuel Filter; Fuel Filter, Removing and Installing .

– Install the engine covers. Refer to ⇒ "3.1 Engine Cover, Removing and Installing", page 77 .

Tightening Specifications

- Refer to ⇒ Fig. ""Coolant Expansion Tank - Tightening Specification"" , page 182
- Refer to ⇒ Servicing – 6-Cylinder TDI Common Rail Engine; Rep. Gr. 15 ; Cylinder Head; Overview - Cylinder Head Cover .
- Low pressure side refrigerant line. Refer to ⇒ Heating, Ventilation and Air Conditioning; Rep. Gr. 87 ; Refrigerant Circuit .

5.9 High Pressure Lines, Removing and Installing

All procedures are described. Refer to ⇒ Servicing – 6-Cylinder TDI Common Rail Engine; Rep. Gr. 23 ; Fuel Injectors/High Pressure Reservoir (Rail); Fuel Injectors, Checking .

5.10 High Pressure Reservoir (Rail), Removing and Installing

Removing

– Remove the corresponding engine cover. Refer to ⇒ "3.1 Engine Cover, Removing and Installing", page 77 .

All additional procedures are described. Refer to ⇒ Servicing – 6-Cylinder TDI Common Rail Engine; Rep. Gr. 23 ; Fuel Injectors/ High Pressure Reservoir (Rail); High Pressure Reservoir (Rail), Removing and Installing .

Installing

Additional procedures:

– Install the engine covers. Refer to ⇒ "3.1 Engine Cover, Removing and Installing", page 77 .

Protected by copyright. Copying for private or commercial purposes, in part or in whole, is not permitted unless authorised by AUDI AG. AUDI AG does not guarantee or accept any liability with respect to the correctness of information in this document. Copyright by AUDI AG.

cardiagn.com

6 Sensors

⇒ “6.1 Intake Air Temperature Sensor G42 , Removing and Installing”, page 240

⇒ “6.2 Mass Airflow Sensor G70 , Removing and Installing”, page 241

⇒ “6.3 Fuel Temperature Sensor G81 , Removing and Installing”, page 242

⇒ “6.4 Fuel Pressure Sensor G247 , Removing and Installing”, page 242

⇒ “6.5 Low Fuel Pressure Sensor G410 , Removing and Installing”, page 242

⇒ “6.6 Differential Pressure Sensor G505 , Removing and Installing”, page 243

⇒ “6.7 Fuel Pressure Regulator Valve N276 , Checking”, page 243

⇒ “6.8 Fuel Pressure Regulator Valve N276 , Removing and Installing”, page 245

6.1 Intake Air Temperature Sensor - G42- , Removing and Installing

⇒ “6.1.1 Intake Air Temperature Sensor G42 , Removing and Installing, Versions with Center Charge Air Cooler”, page 240

⇒ “6.1.2 Intake Air Temperature Sensor G42 , Removing and Installing, Versions with Side Charge Air Cooler”, page 241

6.1.1 Intake Air Temperature Sensor - G42- , Removing and Installing, Versions with Center Charge Air Cooler

Removing

– Remove the left air intake grille. Refer to ⇒ Body Exterior; Rep. Gr. 63 ; Front Bumper .

– Equipped on some models: remove the air intake grille cap. Refer to ⇒ Body Exterior; Rep. Gr. 63 ; Front Bumper .

– Disconnect the connector -2-.

– Remove the bolt -1- and then remove the Intake Air Temperature Sensor - G42- .

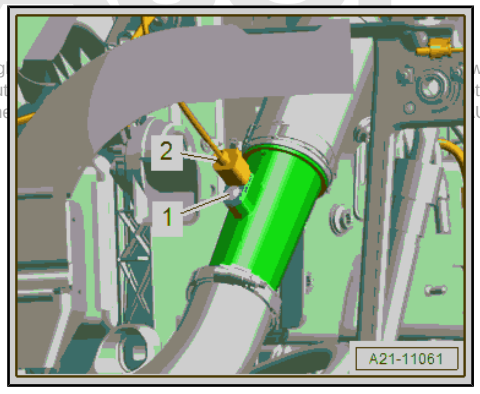

Installing

Install in reverse order of removal and note the following:

• Replace the O-ring after removing.

– Install the cap for the air intake grille and the air intake grille. Refer to ⇒ Body Exterior; Rep. Gr. 63 ; Front Bumper .

Tightening Specifications

♦ Refer to ⇒ “2.1 Overview - Charge Air System”, page 209

cardiagn.com
Audi
...y copyrig... ...whole, is not
permitted unless aut... ...t any liability
with respect to the... ...UDI AG.

6.1.2 Intake Air Temperature Sensor - G42- , Removing and Installing, Versions with Side Charge Air Cooler

Removing

– Remove the left front section of the wheel housing liner. Refer to ⇒ Body Exterior; Rep. Gr. 66 ; Wheel Housing Liner; Front Wheel Housing Liner, Removing and Installing .

– Disconnect the connector -2-.

– Remove the bolt -1- and then remove the Intake Air Temperature Sensor - G42- .

Installing

Install in reverse order of removal and note the following:

- Replace the O-ring after removing.

Tightening Specifications

♦ Refer to ⇒ “2.1 Overview - Charge Air System”, page 209

♦ Refer to ⇒ Body Exterior; Rep. Gr. 66 ; Wheel Housing Liner; Overview - Front Wheel Housing Liner .

6.2 Mass Airflow Sensor - G70- , Removing and Installing

Removing

– Remove the air filter upper section. Refer to ⇒ “3.2 Air Filter Housing, Removing and Installing”, page 229 .

– Disconnect the connector -2-.

– Loosen the hose clamp -4- and open the clips in direction of -arrows-.

– Remove the Mass Airflow Sensor - G70- -3- from the air filter lower section and the air duct pipe.

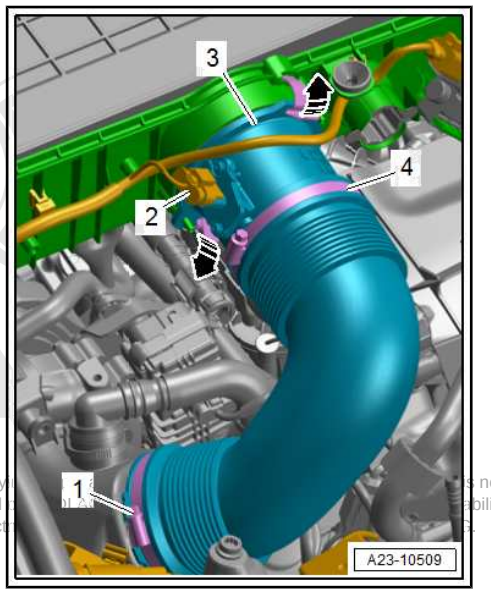

Installing

Install in reverse order of removal and note the following:

The following information and procedures must be followed exactly to ensure that the Mass Airflow Sensor - G70- works correctly.

TIP:

If the air filter element is very dirty or soaked, dirt particles or moisture may have contaminated the mass airflow sensor and may be causing false mass airflow values. This results in reduced performance, since a lower injection quantity is calculated.

- Secure all hose connections with hose clamps that match the ones used in series production. Refer to the Parts Catalog.

– Install the air filter upper section. Refer to ⇒ “3.2 Air Filter Housing, Removing and Installing”, page 229 .

Tightening Specifications

♦ Refer to ⇒ Servicing – 6-Cylinder TDI Common Rail Engine; Rep. Gr. 21 ; Charge Air System; Overview - Charge Air Hose Connections .

cardiagn.com

6.3 Fuel Temperature Sensor - G81- , Removing and Installing

⇒ “6.3.1 Fuel Temperature Sensor G81 , Removing and Installing, Equipment Versions without EGR Auxiliary Cooler”, page 242

⇒ “6.3.2 Fuel Temperature Sensor G81 , Removing and Installing, Equipment Versions with EGR Auxiliary Cooler”, page 242

6.3.1 Fuel Temperature Sensor - G81- , Removing and Installing, Equipment Versions without EGR Auxiliary Cooler

Removing

– Remove the air filter housing. Refer to ⇒ “3.2 Air Filter Housing, Removing and Installing”, page 229 .

All additional procedures are described. Refer to ⇒ Servicing – 6-Cylinder TDI Common Rail Engine; Rep. Gr. 23 ; Sensors; Fuel Temperature Sensor - G81- , Removing and Installing .

Installing

Additional procedures:

– Install the air filter housing. Refer to ⇒ “3.2 Air Filter Housing, Removing and Installing”, page 229 .

6.3.2 Fuel Temperature Sensor - G81- , Removing and Installing, Equipment Versions with EGR Auxiliary Cooler

All procedures are described. Refer to ⇒ Servicing – 6-Cylinder TDI Common Rail Engine; Rep. Gr. 23 ; Sensors; Fuel Temperature Sensor - G81- , Removing and Installing .

6.4 Fuel Pressure Sensor - G247- , Removing and Installing

Removing

– Remove the air filter upper section. Refer to ⇒ “3.2 Air Filter Housing, Removing and Installing”, page 229 .

All additional procedures are described. Refer to ⇒ Servicing – 6-Cylinder TDI Common Rail Engine; Rep. Gr. 23 ; Sensors; Fuel Pressure Sensor - G247- , Removing and Installing .

Installing

Additional procedures:

– Install the air filter upper section. Refer to ⇒ “3.2 Air Filter Housing, Removing and Installing”, page 229 .

6.5 Low Fuel Pressure Sensor - G410- , Removing and Installing

Removing

– Remove the right engine cover. Refer to ⇒ “3.1 Engine Cover, Removing and Installing”, page 77 .

cardiagn.com

Protected by copyright. Copying for private or commercial purposes, in part or in whole, is not permitted unless authorised by AUDI AG. AUDI AG does not guarantee or accept any liability with respect to the correctness of information in this document. Copyright by AUDI AG.

All additional procedures are described. Refer to ⇒ Servicing – 6-Cylinder TDI Common Rail Engine; Rep. Gr. 23 ; Sensors; Low Fuel Pressure Sensor - G410- , Removing and Installing .

Installing

Additional procedures:

– Install the engine cover. Refer to ⇒ “3.1 Engine Cover, Removing and Installing”, page 77 .

6.6 Differential Pressure Sensor - G505- , Removing and Installing

Protected by copyright. Copying for private or commercial purposes, in part or in whole, is not permitted unless authorized by AUDI AG. AUDI AG does not guarantee or accept any liability with respect to the correctness of information in this document. Copyright by AUDI AG.

Special tools and workshop equipment required

♦ Vehicle Diagnostic Tester

Removing

– Remove the air filter upper section. Refer to ⇒ “3.2 Air Filter Housing, Removing and Installing”, page 229 .

– Disconnect the connector -3-.

– Remove the bolt -2- and free up the Differential Pressure Sensor - G505- from the clip -1-.

– Open the hose clamps -4- and spray the hoses with silicone-free lubricant.

– To prevent the connection from breaking, carefully and evenly pull the hoses off of the connection.

Installing

Install in reverse order of removal and note the following:

- To clear away any blockage or ice build-up due to condensation water, blow through the hose with compressed air in the direction of the emissions control module.
- Check the hoses for secure fit and leaks.
- If the pressure lines at the emissions control module were loosened, tighten them to their tightening specification.
- Secure all hose connections with hose clamps that match the ones used in series production. Refer to the Parts Catalog.
- If the Differential Pressure Sensor - G505- is replaced, the adaptation value must be adapted. Refer to Vehicle Diagnostic Tester .

– Install the air filter upper section. Refer to ⇒ “3.2 Air Filter Housing, Removing and Installing”, page 229 .

Tightening Specifications

♦ Refer to ⇒ Fig. “” Differential Pressure Sensor -G505- - Tightening Specification”“ , page 248

6.7 Fuel Pressure Regulator Valve - N276- , Checking

Special tools and workshop equipment required

♦ Hose Clamps - Up To 25mm - 3094-

♦ Diesel Pressure Tester Kit - Test Hose 3 - VAS6551/3- from Diesel Pressure Tester Kit - VAS6551-

cardiagn.com

- Fuel-Resistant Measuring Container
- Assisting hose for return connection

Procedure

- Fuel temperature greater than 15 °C (59 °F).

– Pay attention to the guidelines for clean working conditions for procedures on the fuel supply. Refer to ⇒ Servicing – 6-Cylinder TDI Common Rail Engine; Rep. Gr. 00 ; Repair Information; Guidelines For Clean Working Conditions .

– Remove the air filter upper section. Refer to ⇒ "3.2 Air Filter Housing, Removing and Installing", page 229 .

– Clamp off the fuel return hose -arrow- using a -3094- and disconnect it. Refer to ⇒ Fuel Supply System; Rep. Gr. 20 ; Connector Couplings; Connector Couplings, Disconnecting .

– Free up the fuel return hose and set it aside.

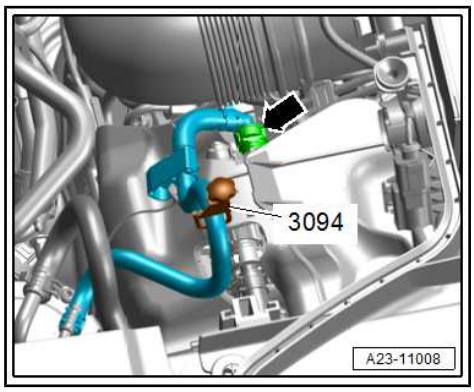

Protected by copyright. Copying for private or commercial purposes, in part or in whole, is not permitted unless authorised by AUDI AG. AUDI AG does not guarantee or accept any liability with respect to the correctness of information in this document. Copyright by AUDI AG.

cardiagn.com

– Connect the -VAS6551/3- to the return hose -arrow- and hold it in a measuring container as shown.
– Start the engine and let it idle for a one minute:
• Return quantity during the start procedure: 0 ml.
– Let the engine idle longer.
– While the engine is running, empty the measuring container or switch it with an empty measuring container and start to measure.
– Let the engine idle for two minutes then measure the return quantity.
• Return quantity in two minutes: 0 to 60 ml.

If the specified values are attained, then the Fuel Pressure Regulator Valve - N276- is OK.

If the Specified Values are Not Attained:

The Fuel Pressure Regulator Valve - N276- and the fuel injectors were checked with the previous measurements.

• To find out which component is faulty, the fuel injector return quantity must be measured.
– Measure the fuel injector return quantity with the engine running. Refer to
⇒ “5.5 Fuel Injectors, Checking Return Quantity with Engine Running”, page 237 .
– If the fuel injector return quantity is OK, then replace the Fuel Pressure Regulator Valve - N276- .
– If the fuel injector return quantity is not OK, then replace the faulty fuel injector.

Assembling

Assemble in the reverse order of removal. Note the following:

– Connect the fuel return hose. Refer to ⇒ Fuel Supply System; Rep. Gr. 20 ; Connector Couplings; Connector Couplings, Disconnecting .
– Install the air filter upper section. Refer to
⇒ “3.2 Air Filter Housing, Removing and Installing”, page 229 .

6.8 Fuel Pressure Regulator Valve - N276- , Removing and Installing

Removing

– Remove the right engine cover. Refer to
⇒ “3.1 Engine Cover, Removing and Installing”, page 77 .

Protected by copyright. Copying for private or commercial purposes, in part or in whole, is not permitted unless authorised by AUDI AG. AUDI AG does not guarantee or accept any liability with respect to the correctness of information in this document. Copyright by AUDI AG.

All additional procedures are described. Refer to ⇒ Servicing – 6-Cylinder TDI Common Rail Engine; Rep. Gr. 23 ; Sensors; Fuel Pressure Regulator Valve - N276- , Removing and Installing .

Assembling

Additional procedures:

– Install the engine cover. Refer to
⇒ “3.1 Engine Cover, Removing and Installing”, page 77 .

cardiagn.com

7 High Pressure Pump

All procedures and components are described. Refer to ⇒ Servicing – 6-Cylinder TDI Common Rail Engine; Rep. Gr. 23 ; High Pressure Pump .

Protected by copyright. Copying for private or commercial purposes, in part or in whole, is not permitted unless authorised by AUDI AG. AUDI AG does not guarantee or accept any liability with respect to the correctness of information in this document. Copyright by AUDI AG.

cardiagn.com

8 Heated Oxygen Sensor

⇒ “8.1 Overview - Heated Oxygen Sensor”, page 247

⇒ “8.2 Heated Oxygen Sensor, Removing and Installing”, page 249

⇒ “8.3 NOx Sensor, Removing and Installing”, page 249

⇒ “8.4 Particulate Sensor G784 , Removing and Installing”, page 251

8.1 Overview - Heated Oxygen Sensor

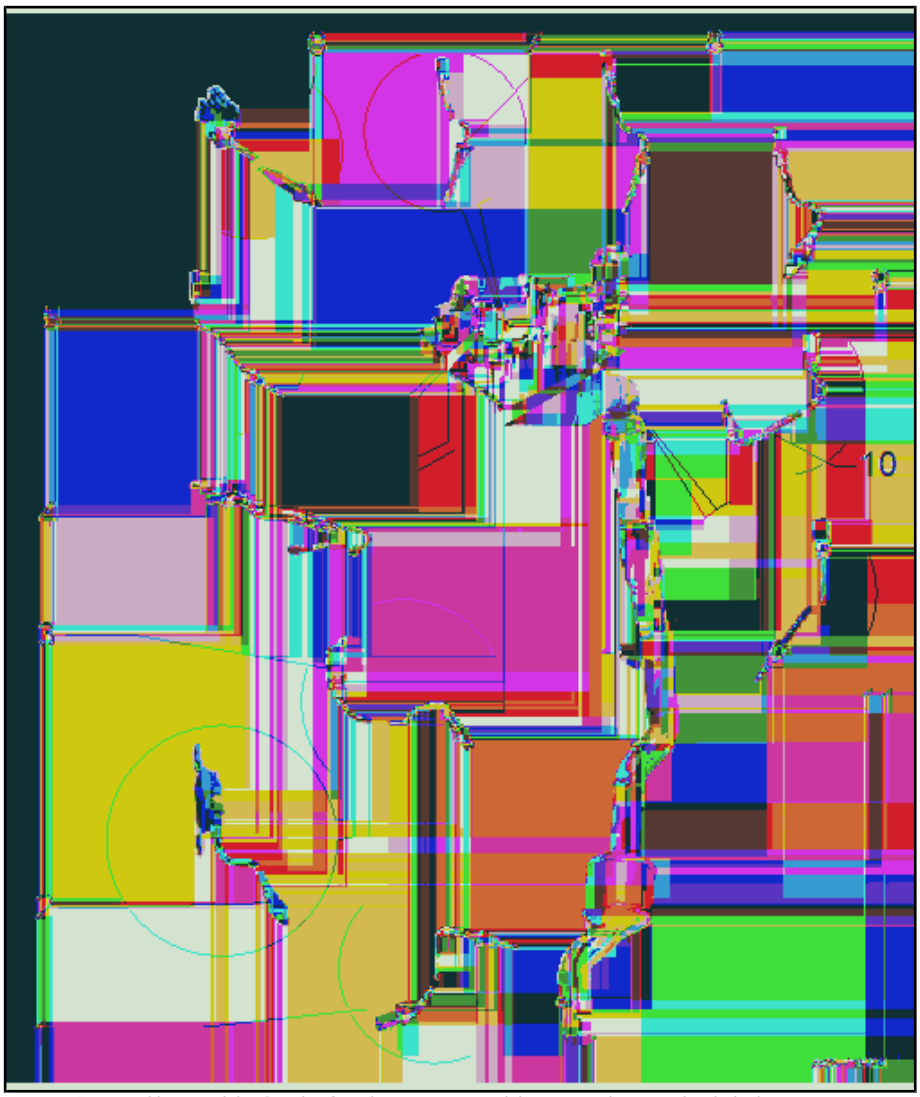

1 - Exhaust Gas Temperature Sensor 5 - G815-

- ❑ Discontinued with newer versions
- ❑ Removing and installing. Refer to ⇒ “4.2.5 Exhaust Gas Temperature Sensor 5 G815 , Removing and Installing”, page 283 .

2 - NOx Sensor 2 - G687- with NOx Sensor Control Module 2 - J881-

- ❑ Removing and installing. Refer to ⇒ “8.3.2 NOx Sensor 2 G687 , Removing and Installing”, page 250 .
- ❑ Bracket tightening specification. Refer to ⇒ Fig. ““Bracket for NOx Sensor Control Module 2 -J881- and Particulate Sensor -G784- - Tightening Specification”“ , page 249 .
- ❑ Tightening specifications. Refer to ⇒ Servicing – 6-Cylinder TDI Common Rail Engine; Rep. Gr. 23 ; Heated Oxygen Sensor, Overview - Heated Oxygen Sensor .

3 - Particulate Sensor - G784-

- ❑ Removing and installing. Refer to ⇒ “8.4 Particulate Sensor G784 , Removing and Installing”, page 251 .
- ❑ Different installation position
- ❑ Bracket tightening specification. Refer to ⇒ Fig. ““Bracket for NOx Sensor Control Module 2 -J881- and Particulate Sensor -G784- - Tightening Specification”“ , page 249 .
- ❑ Tightening specifications. Refer to ⇒ Servicing – 6-Cylinder TDI Common Rail Engine; Rep. Gr. 23 ; Heated Oxygen Sensor, Overview - Heated Oxygen Sensor .

4 - Differential Pressure Sensor - G505-

- ❑ Removing and installing. Refer to ⇒ “6.6 Differential Pressure Sensor G505 , Removing and Installing”, page 243 .

Protected by copyright. Copying for private or commercial purposes, in part or in whole, is not permitted unless authorised by AUDI AG. AUDI AG does not guarantee or accept any liability with respect to the correctness of information in this document. Copyright by AUDI AG.

cardiagn.com

- ❑ Tightening specifications. Refer to ⇒ Servicing – 6-Cylinder TDI Common Rail Engine; Rep. Gr. 23 ; Heated Oxygen Sensor, Overview - Heated Oxygen Sensor .

5 - Exhaust Gas Temperature Sensor 3 - G495-

- ❑ Removing and installing. Refer to ⇒ Servicing – 6-Cylinder TDI Common Rail Engine; Rep. Gr. 26 ; Exhaust Gas Temperature Sensor; Exhaust Gas Temperature Sensor, Removing and Installing .

6 - NOx Sensor - G295- with NOx Sensor Control Module - J583-

- ❑ Removing and installing. Refer to ⇒ "8.3.1 NOx Sensor G295 , Removing and Installing", page 249 .
- ❑ Tightening specifications. Refer to ⇒ Servicing – 6-Cylinder TDI Common Rail Engine; Rep. Gr. 23 ; Heated Oxygen Sensor, Overview - Heated Oxygen Sensor .

7 - Catalyst Temperature Sensor 1 - G20-

- ❑ Market-Specific Version
- ❑ Removing and installing. Refer to ⇒ "4.3 Catalyst Temperature Sensor 1 G20 , Removing and Installing", page 284 .
- ❑ Tightening specifications. Refer to ⇒ Servicing – 6-Cylinder TDI Common Rail Engine; Rep. Gr. 23 ; Heated Oxygen Sensor, Overview - Heated Oxygen Sensor .

8 - Exhaust Gas Temperature Sensor 2 - G448-

- ❑ Removing and installing. Refer to ⇒ Servicing – 6-Cylinder TDI Common Rail Engine; Rep. Gr. 26 ; Exhaust Gas Temperature Sensor; Exhaust Gas Temperature Sensor, Removing and Installing .

9 - Heated Oxygen Sensor - G39- with Oxygen Sensor Heater - Z19-

- ❑ Removing and installing. Refer to ⇒ "8.2 Heated Oxygen Sensor, Removing and Installing", page 249 .
- ❑ Tightening specifications and installation instructions. Refer to ⇒ Servicing – 6-Cylinder TDI Common Rail Engine; Rep. Gr. 23 ; Heated Oxygen Sensor, Overview - Heated Oxygen Sensor .

Protected by copyright. Copying for private or commercial purposes, in part or in whole, is not permitted unless authorized by AUDI AG. AUDI AG does not guarantee or accept any liability with respect to the correctness of information in this document. Copyright by AUDI AG.

10 - Exhaust Gas Temperature Sensor 1 - G235-

- ❑ Removing and installing. Refer to ⇒ Servicing – 6-Cylinder TDI Common Rail Engine; Rep. Gr. 26 ; Exhaust Gas Temperature Sensor; Exhaust Gas Temperature Sensor, Removing and Installing .

11 - Exhaust Gas Temperature Sensor 4 - G648-

- ❑ Removing and installing. Refer to ⇒ "4.2.4 Exhaust Gas Temperature Sensor 4 G648 , Removing and Installing", page 283 .

Differential Pressure Sensor - G505- - Tightening Specification

– Tighten the bolt -2- to 9 Nm.

NOx Sensor Control Module - J583- - Tightening Specification

– Tighten the nut -2- to 9 Nm.

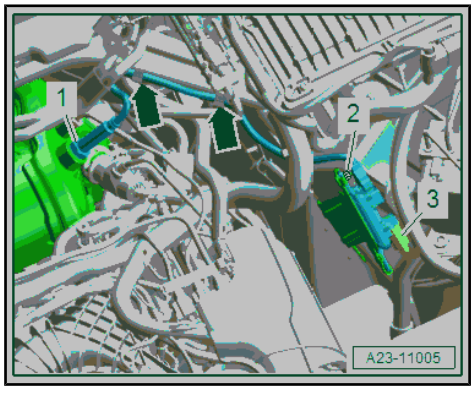

cardiagn.com

Bracket for NOx Sensor Control Module 2 - J881- and Particulate Sensor - G784- - Tightening Specification

– Tighten the bolts -arrows- to 4.5 Nm.

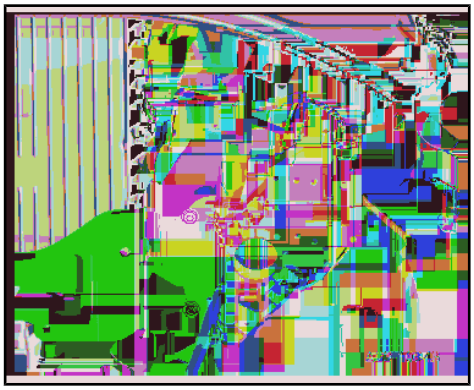

8.2 Heated Oxygen Sensor, Removing and Installing

Removing

– Remove the air filter housing. Refer to ⇒ "3.2 Air Filter Housing, Removing and Installing", page 229 .

All additional procedures are described. Refer to ⇒ Servicing – 6-Cylinder TDI Common Rail Engine; Rep. Gr. 23 ; Heated Oxygen Sensor; Heated Oxygen Sensor, Removing and Installing .

Installing

Additional procedures:

– Install the air filter housing. Refer to ⇒ "3.2 Air Filter Housing, Removing and Installing", page 229 .

8.3 NOx Sensor, Removing and Installing

⇒ "8.3.1 NOx Sensor G295 , Removing and Installing", page 249

⇒ "8.3.2 NOx Sensor 2 G687 , Removing and Installing", page 250

Protected by copyright. Copying for private or commercial purposes, in part or in whole, is not permitted unless authorised by AUDI AG. AUDI AG does not guarantee or accept any liability with respect to the correctness of information in this document. Copyright by AUDI AG.

8.3.1 NOx Sensor - G295- , Removing and Installing

Special tools and workshop equipment required

♦ Ring Wrench 7-Piece Set - 3337-

Removing

– Remove the air filter housing. Refer to ⇒ "3.2 Air Filter Housing, Removing and Installing", page 229 .

cardiagn.com

Vehicle without High-Voltage System

– Disconnect the connector -3-.

– Remove the bolt -2-, free up the wiring harness at the clips -arrows- and remove the NOx Sensor Control Module - J583- from the bracket.

– Remove the NOx Sensor - G295- -1- using a tool from the -3337- .

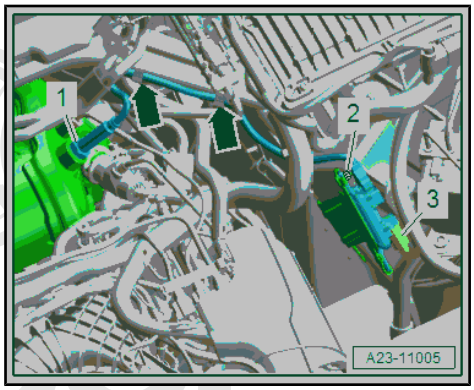

Vehicle with High-Voltage System

– Disconnect the connector -3-.

– Remove the nut -2- and remove the NOx Sensor Control Module - J583- from the bracket.

– Remove the NOx Sensor - G295- -1- using a tool from the -3337- .

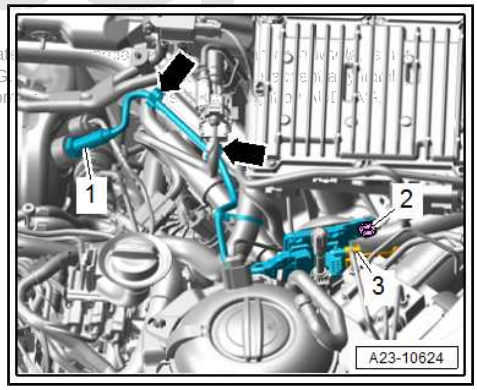

Installing

Install in reverse order of removal and note the following:

• Coat the threads with hot bolt paste. Refer to the Parts Catalog.

– Install the air filter housing. Refer to ⇒ “3.2 Air Filter Housing, Removing and Installing”, page 229 .

Tightening Specifications

♦ Refer to ⇒ “8.1 Overview - Heated Oxygen Sensor”, page 247

8.3.2 NOx Sensor 2 - G687- , Removing and Installing

Special tools and workshop equipment required

♦ Ring Wrench 7-Piece Set - 3337-

Removing

– Remove the rear and left noise insulation. Refer to ⇒ Body Exterior; Rep. Gr. 66 ; Noise Insulation; Noise Insulation, Removing and Installing .

Vehicle without High-Voltage System:

– Remove the NOx Sensor 2 - G687- -2- using a tool from the -3337- .

– Free up the wire from the clips -arrows-.

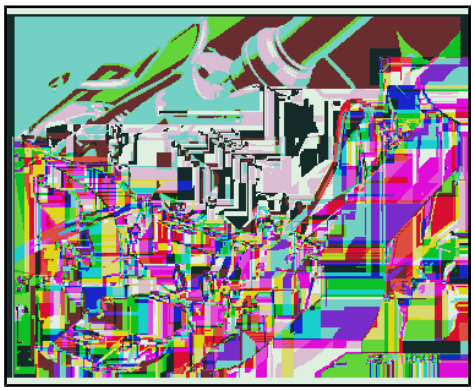

Protected by copyright. Copying for private or commercial purposes, in part or in whole, is not permitted unless authorised by AUDI AG. AUDI AG does not guarantee or accept any liability with respect to the correctness of information in this document.
cardiagn.com

Vehicle with High-Voltage System

– Remove the NOx Sensor 2 - G687- -1- using a tool from the -3337- .

– Free up the wire from the clips -arrows-.

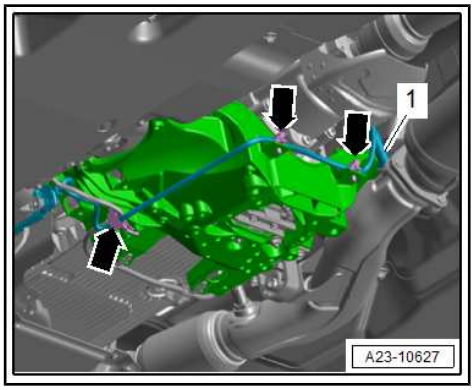

Continuation for All Vehicles

– Disconnect the connectors -1 and 2-.

– Remove the bolts -arrows- and remove the bracket with the NOx Sensor Control Module 2 - J881- and Particulate Sensor - G784- from the tunnel crossmember.

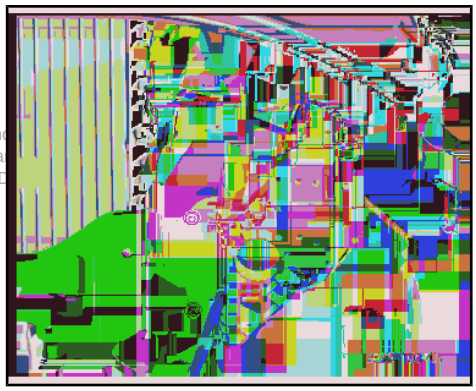

– Release the retainer in the direction of -arrow B- and remove the NOx Sensor Control Module 2 - J881- -2- from the bracket -3-.

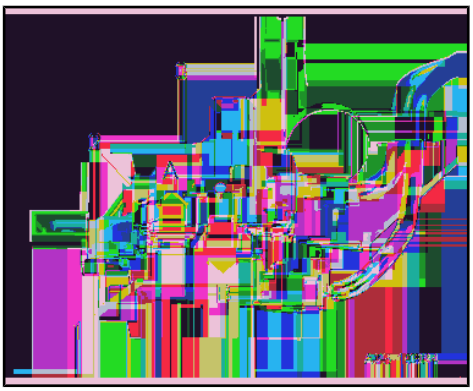

Installing

Install in reverse order of removal and note the following:

- Coat the threads with hot bolt paste. Refer to the Parts Catalog.

Tightening Specifications

♦ Refer to
⇒ “8.1 Overview - Heated Oxygen Sensor”, page 247

♦ Refer to
⇒ Fig. ““Bracket for NOx Sensor Control Module 2 -J881- and Particulate Sensor -G784- - Tightening Specification”“ , page 249

♦ Refer to ⇒ Body Exterior; Rep. Gr. 66 ; Noise Insulation; Overview - Noise Insulation .

8.4 Particulate Sensor - G784- , Removing and Installing

Special tools and workshop equipment required

♦ Ring Wrench 7-Piece Set - 3337-

Removing

– Remove the rear and left noise insulation. Refer to ⇒ Body Exterior; Rep. Gr. 66 ; Noise Insulation; Noise Insulation, Removing and Installing .

Vehicle without High-Voltage System

– Remove the Particulate Sensor - G784- -1- using a tool from the -3337- .

cardiagn.com

– Free up the wire from the clips -arrows-.

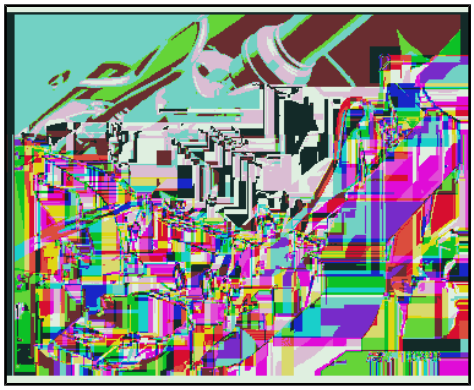

Vehicle with High-Voltage System

– Remove the Particulate Sensor - G784- -1- using a tool from the -3337- .

– Free up the wire from the clips -arrows-.

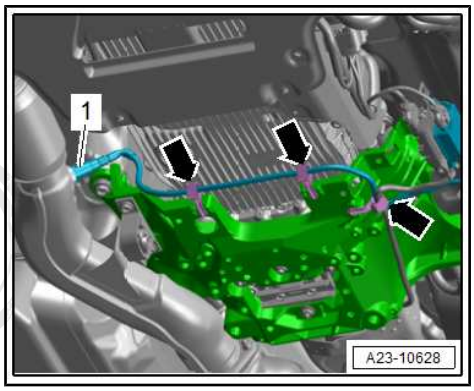

Continuation for All Vehicles

– Disconnect the connectors -1 and 2-.

– Remove the bolts -arrows-.

– Free up the wires.

– Tie up the bracket with the NOx Sensor Control Module 2 - J881- and the Particulate Sensor - G784- from the tunnel crossmember.

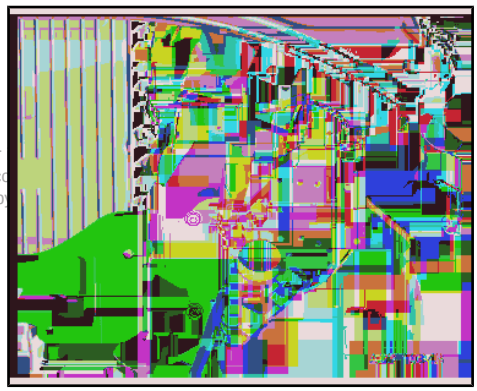

Protected by copyright. Copying for private or commercial purposes, in part or
permitted unless authorised by AUDI AG. AUDI AG does not guarantee or acc
with regards to the correctness of information in this document. Copyright by

– Release the retainer in direction of -arrow A- and remove the Particulate Sensor - G784- -1- from the bracket -3-.

Installing

Install in reverse order of removal and note the following:

- Coat the threads with hot bolt paste. Refer to the Parts Catalog.

Tightening Specifications

♦ Refer to
⇒ “8.1 Overview - Heated Oxygen Sensor”, page 247

♦ Refer to
⇒ Fig. ““Bracket for NOx Sensor Control Module 2 -J881- and Particulate Sensor -G784- - Tightening Specification”“ , page 249

♦ Refer to ⇒ Body Exterior; Rep. Gr. 66 ; Noise Insulation; Overview - Noise Insulation .

cardiagn.com

9 Engine Control Module

⇒ “9.1 Overview - Engine Control Module”, page 253

⇒ “9.2 Engine Control Module J623 , Removing and Installing”, page 253

9.1 Overview - Engine Control Module

1 - Suspension Strut Tower

2 - Mount

- ❑ for the Engine Control Module - J623-

3 - Nut

- ❑ 3.5 Nm

4 - Engine Control Module - J623-

- ❑ Removing and installing. Refer to ⇒ “9.2 Engine Control Module J623 , Removing and Installing”, page 253 .

5 - Bolt

- ❑ 5 Nm

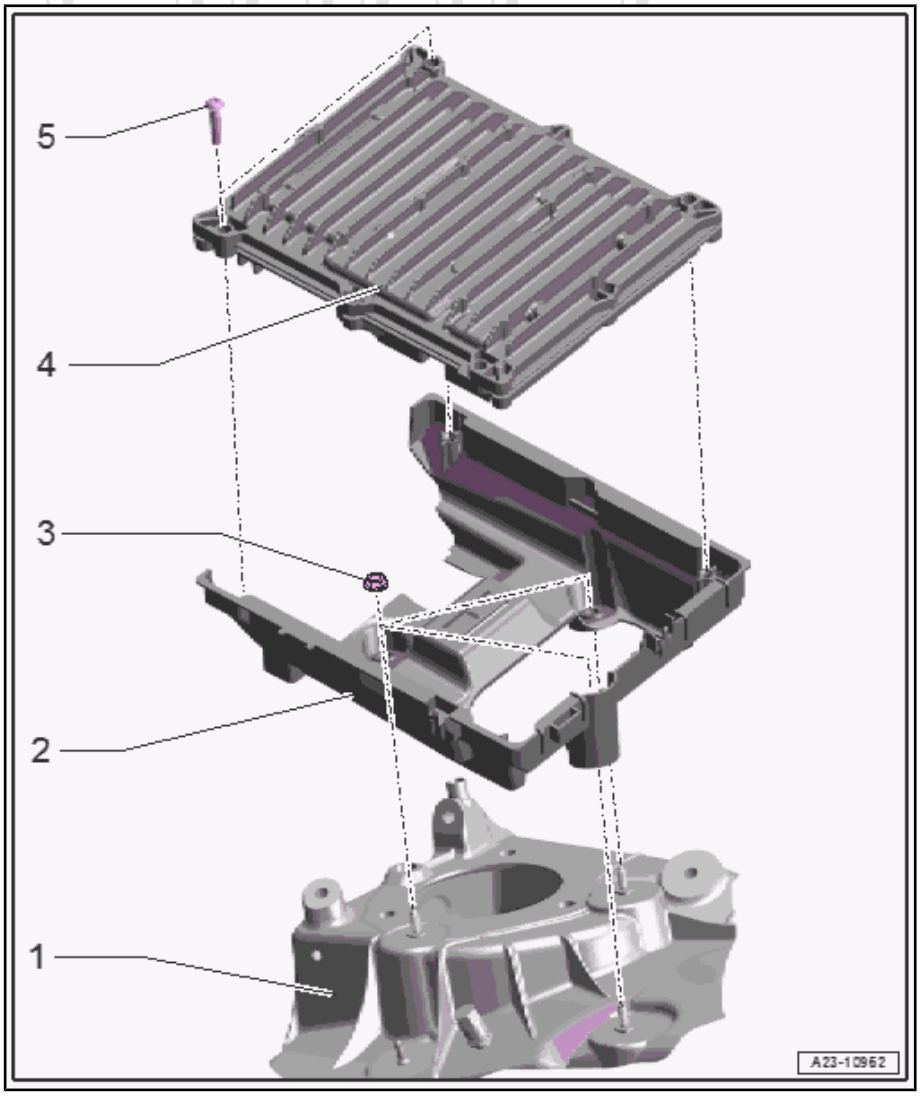

9.2 Engine Control Module - J623- , Removing and Installing

Special tools and workshop equipment required

- ♦ Vehicle Diagnostic Tester

Removing

- If the engine control module is replaced, the adaptation must be performed. Refer to Vehicle Diagnostic Tester .
- If the fuel injector adaptation values from the old (faulty) engine control unit are no longer readable, they must be manually entered and adapted in the new engine control module.

cardiagn.com

– Remove the bolts -arrows- and remove the Engine Control Module - J623- -1-.

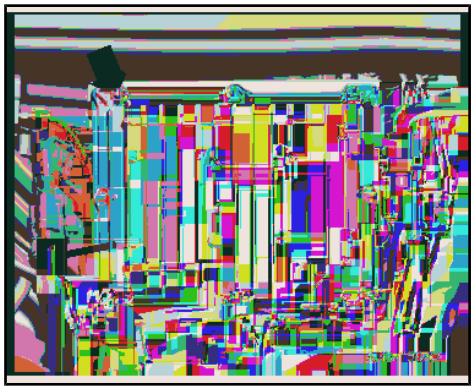

– Disconnect the connectors -arrows- and remove the Engine Control Module - J623- .

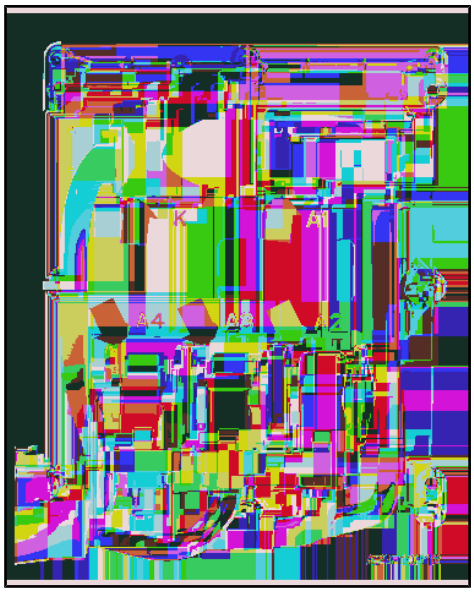

Installing

Install in reverse order of removal and note the following:

- If the Engine Control Module - J623- was replaced, it must be activated. Refer to Vehicle Diagnostic Tester .
- If the Engine Control Module - J623- is replaced, the adaptation values must be additionally adapted. Refer to Vehicle Diagnostic Tester .

Tightening Specifications

◆ Refer to
⇒ “9.1 Overview - Engine Control Module”, page 253

cardiagn.com

Protected by copyright. Copying for private or commercial purposes, in part or in whole, is not permitted unless authorised by AUDI AG. AUDI AG does not guarantee or accept any liability with respect to the correctness of information in this document. Copyright by AUDI AG.

10 Special Tools

Special tools and workshop equipment required

- Hand Vacuum Pump - VAS6213-

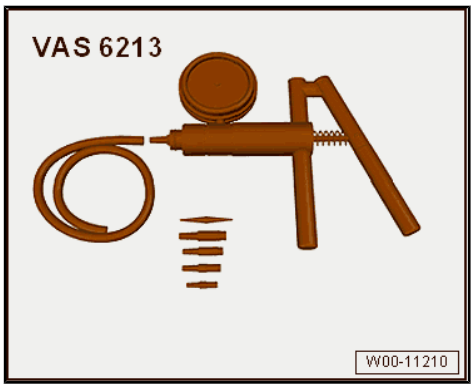

- Diesel Pressure Tester Kit - Test Hose 3 - VAS6551/3- from Diesel Pressure Tester Kit - VAS6551-

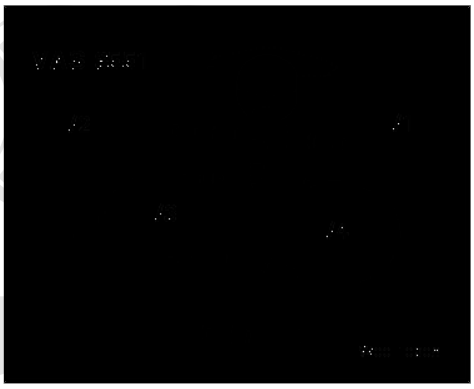

- Hose Clamps - Up To 25mm - 3094-

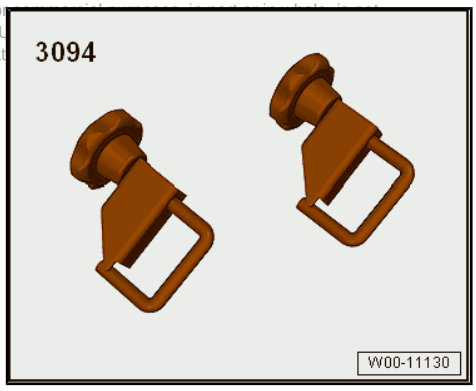

- Ring Wrench 7-Piece Set - 3337-

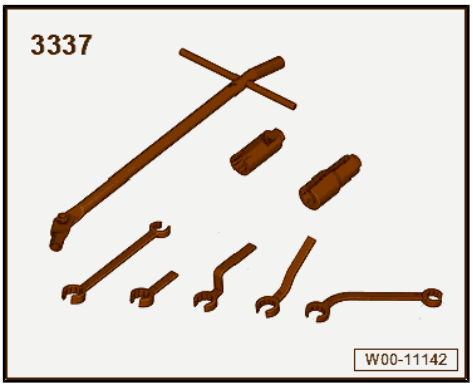

Protected by copyright. Copying for private or
permitted unless authorised by AUDI AG. AU
with respect to the correctness of informat
cardiagn.com

26 – Exhaust System, Emission Controls

1 Exhaust Pipes/Mufflers

⇒ “1.1 Overview - Muffler”, page 256

⇒ “1.2 Front Exhaust Pipe, Removing and Installing”, page 259

⇒ “1.3 Muffler, Removing and Installing”, page 263

⇒ “1.4 Exhaust System, Installing without Tension”, page 264

⇒ “1.5 Exhaust System, Checking for Leaks”, page 265

1.1 Overview - Muffler

⇒ “1.1.1 Overview - Muffler, Vehicles without High-Voltage System”, page 256

⇒ “1.1.2 Overview - Muffler, Vehicles with High-Voltage System”, page 258

Protected by copyright. Copying for private or commercial purposes, in part or in whole, is not permitted unless authorised by AUDI AG. AUDI AG does not guarantee or accept any liability with respect to the correctness of information in this document. Copyright by AUDI AG.

1.1.1 Overview - Muffler, Vehicles without High-Voltage System

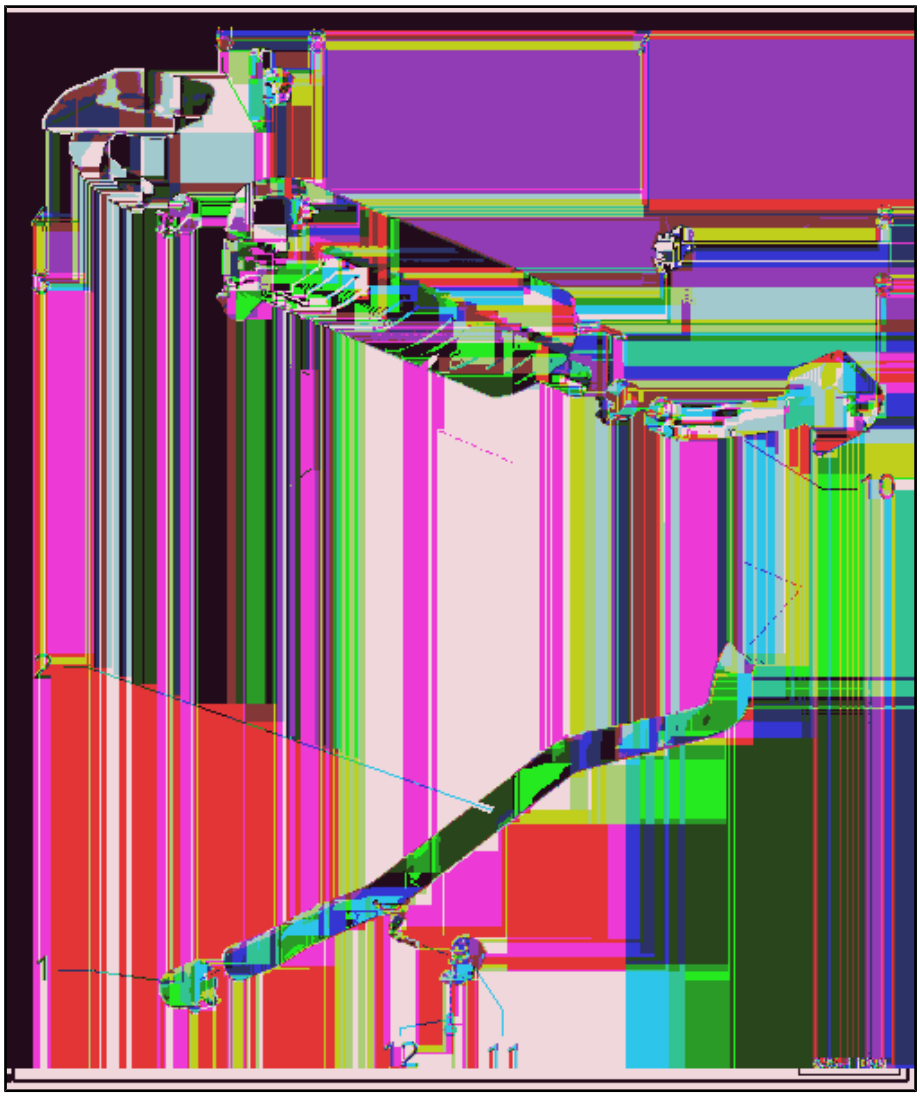

1 - Front Clamping Sleeve

- ❑ 30 Nm
- ❑ Before tightening, align the exhaust system without tension. Refer to ⇒ “1.4 Exhaust System, Installing without Tension”, page 264 .
- ❑ Installation position. Refer to ⇒ Fig. ““Clamping Sleeve Locations”“ , page 257 .
- ❑ Tighten threaded connections evenly.

2 - Rear Muffler

- ❑ Removing and installing. Refer to ⇒ “1.3 Muffler, Removing and Installing”, page 263 .
- ❑ Exhaust system, installing without tension. Refer to ⇒ “1.4 Exhaust System, Installing without Tension”, page 264 .

3 - Screw-Type Clamp

- ❑ 60 Nm

4 - Left Tail Pipe

5 - Bolt

- ❑ 23 Nm

6 - Mount

- ❑ Replace if damaged
- ❑ Check the pretension. Refer to ⇒ “1.4 Exhaust System, Installing without Tension”, page 264 .

cardiagn.com

7 - Mount

- ❑ Replace if damaged
- ❑ Check the pretension. Refer to ⇒ “1.4 Exhaust System, Installing without Tension”, page 264 .

8 - Bolt

- ❑ 23 Nm

9 - Screw-Type Clamp

- ❑ 60 Nm

10 - Right Tail Pipe

11 - Mount

- ❑ Replace if damaged
- ❑ Check the pretension. Refer to ⇒ “1.4 Exhaust System, Installing without Tension”, page 264 .

12 - Bolt

- ❑ Tightening specification. Refer to ⇒ Body Exterior; Rep. Gr. 66 ; Underbody Panel .

Clamping Sleeve Locations

– Install the clamping sleeve in the position shown.

- Installed position: the threaded connections face outward.
- Angle -α- = approximately 20°.

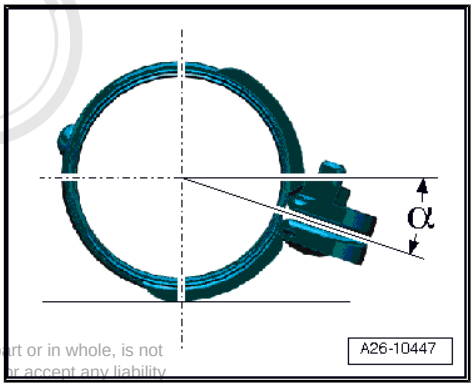

Protected by copyright. Copying for private or commercial purposes, in part or in whole, is not permitted unless authorised by AUDI AG. AUDI AG does not guarantee or accept any liability with respect to the correctness of information in this document. Copyright by AUDI AG.

cardiagn.com

1.1.2 Overview - Muffler, Vehicles with High-Voltage System

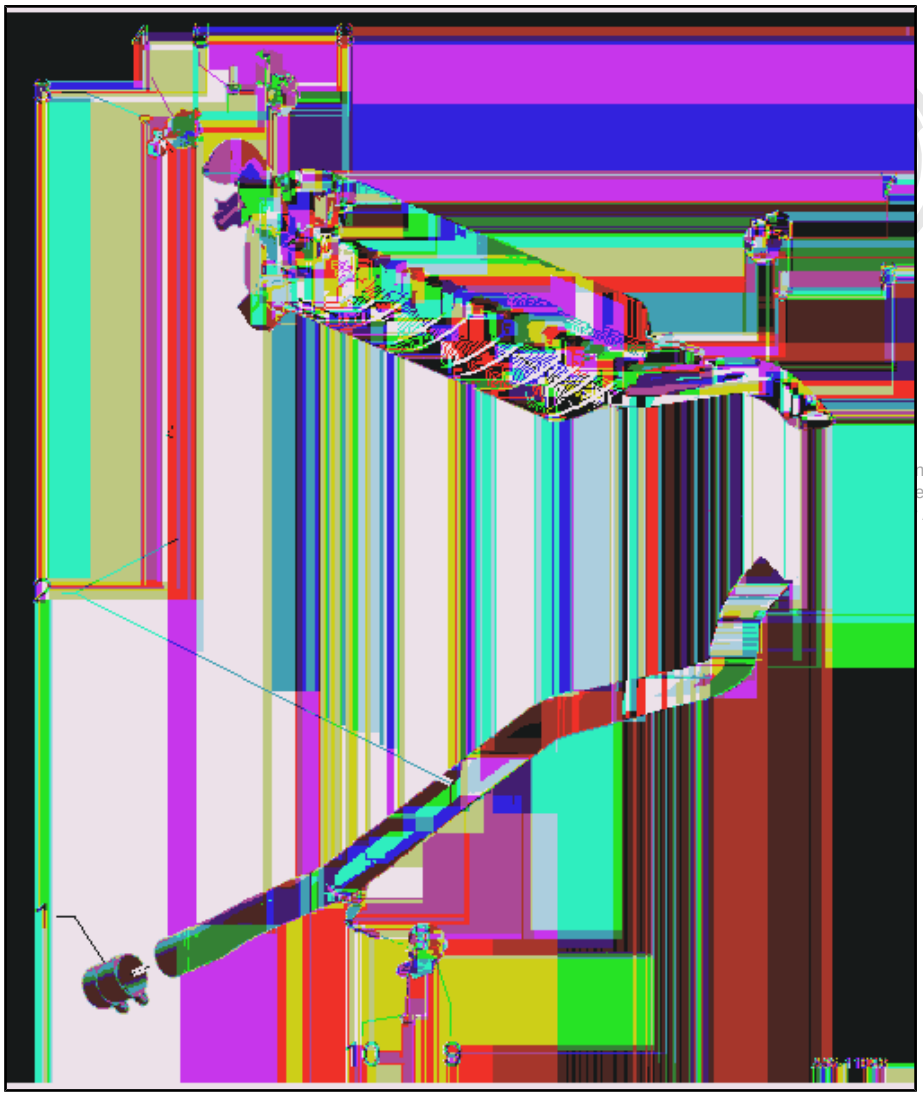

1 - Front Clamping Sleeve

- ❑ 30 Nm
- ❑ Before tightening, align the exhaust system without tension. Refer to ⇒ “1.4 Exhaust System, Installing without Tension”, page 264 .
- ❑ Installation position. Refer to ⇒ Fig. ““Clamping Sleeve Locations”“ , page 257 .
- ❑ Tighten threaded connections evenly.

2 - Rear Muffler

- ❑ Removing and installing. Refer to ⇒ “1.3 Muffler, Removing and Installing”, page 263 .
- ❑ Exhaust system, installing without tension. Refer to ⇒ “1.4 Exhaust System, Installing without Tension”, page 264 .

3 - Nut

- ❑ 3 Nm
- ❑ Replace after removing

4 - Exhaust Door Control Unit - J883-

- ❑ Removing and installing. Refer to ⇒ “2.4 Exhaust Door Control Unit J883 , Removing and Installing”, page 273 .

5 - Bolt

- ❑ 23 Nm

6 - Mount

- ❑ Replace if damaged
- ❑ Check the pretension. Refer to ⇒ “1.4 Exhaust System, Installing without Tension”, page 264 .

7 - Mount

- ❑ Replace if damaged
- ❑ Check the pretension. Refer to ⇒ “1.4 Exhaust System, Installing without Tension”, page 264 .

8 - Bolt

- ❑ 23 Nm

9 - Mount

- ❑ Replace if damaged
- ❑ Check the pretension. Refer to ⇒ “1.4 Exhaust System, Installing without Tension”, page 264 .

10 - Bolt

- ❑ Tightening specification. Refer to ⇒ Body Exterior; Rep. Gr. 66 ; Underbody Panel .

n whole, is not
ept any liability
AUDI AG.
cardiagn.com

1.2 Front Exhaust Pipe, Removing and Installing

⇒ “1.2.1 Front Exhaust Pipe, Removing and Installing, Front Exhaust Pipe as a Unit with SCR Catalytic Converter”, page 259

⇒ “1.2.2 Front Exhaust Pipe, Removing and Installing, Separate Front Exhaust Pipe”, page 261

1.2.1 Front Exhaust Pipe, Removing and Installing, Front Exhaust Pipe as a Unit with SCR Catalytic Converter

Special tools and workshop equipment required

- Vehicle Diagnostic Tester

Removing

- Wear safety gloves during the entire procedure.

– Remove the air filter housing. Refer to ⇒ “3.2 Air Filter Housing, Removing and Installing”, page 229 .

Protected by copyright. Copying for private or commercial purposes, in part or in whole, is not permitted unless authorised by AUDI AG. AUDI AG does not guarantee or accept any liability with respect to the correctness of information in this document. Copyright by AUDI AG.

– Remove the nuts that are accessible -2- from above for the front exhaust pipe. (-1 and 3- are removed later.)

– Remove the rear and left noise insulation. Refer to ⇒ Body Exterior; Rep. Gr. 66 ; Noise Insulation; Noise Insulation, Removing and Installing .

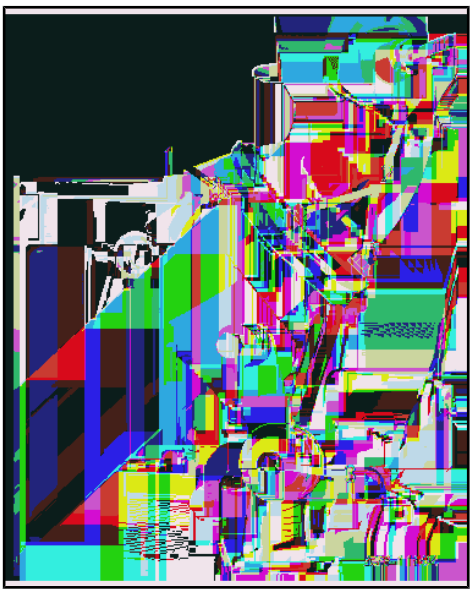

– Disconnect the connectors -1 and 2-.

– Remove the bolts -arrows- and free up the wires.

– Tie up the bracket with the NOx Sensor Control Module 2 - J881- and Particulate Sensor - G784- to the front exhaust pipe.

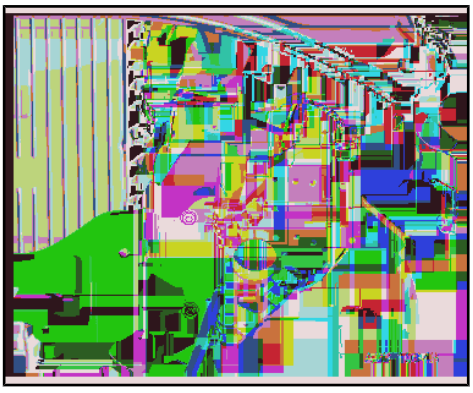

cardiagn.com

Versions with Exhaust Gas Temperature Sensor 5 - G815- :

– Loosen the left underbody trim panel -3- on the inside.

– Free up and disconnect the connector -2- for the Exhaust Gas Temperature Sensor 5 - G815- .

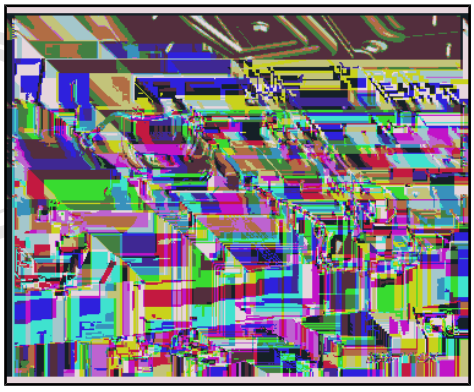

Continuation for All Vehicles

Protected by copyright. Copying for private or commercial purposes, in pa
arantee
t. Copyr

NOTICE

Risk of damaging the coupling due to improper handling.

- **Coupling must not be bent more than 10°.**
- **Do not load the coupling on the cable.**

– Remove the bolts -arrows-.

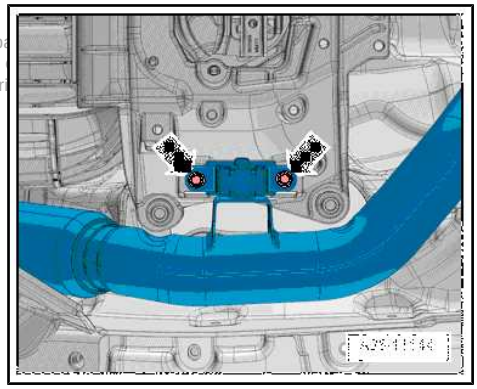

– Remove the bolts -arrows- and the subframe shield upper section -1-.

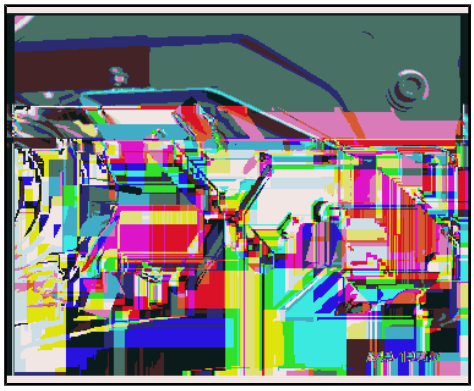

cardiagn.com

– Remove the nut -1- and the bolt -3-.

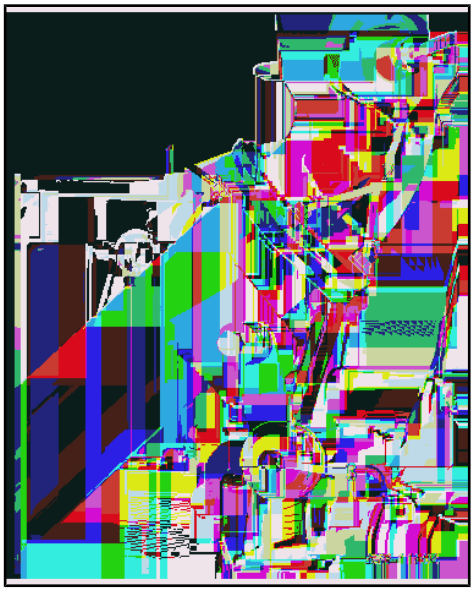

– Loosen the clamping sleeve -arrows- and push toward the rear.

– Remove the front exhaust pipe.

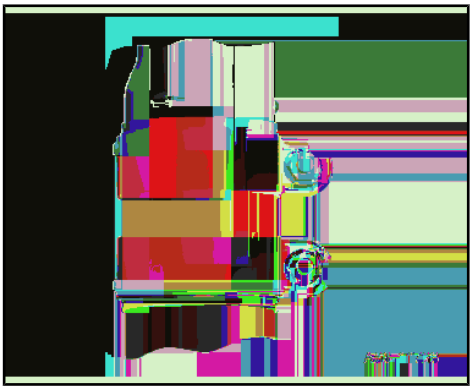

Installing

Install in reverse order of removal and note the following:

- Replace seals and self-locking nuts after disassembly.
- If the front exhaust pipe with integrated SCR catalytic converter is replaced, the adaptation values must be adapted. Refer to Vehicle Diagnostic Tester .

– Install the exhaust system without tension. Refer to ⇒ “1.4 Exhaust System, Installing without Tension”, page 264 .

– Install the air filter housing. Refer to ⇒ “3.2 Air Filter Housing, Removing and Installing”, page 229 .

Tightening Specifications

♦ Refer to ⇒ “1.1 Overview - Muffler”, page 256

♦ Refer to ⇒ “2.1 Overview - Emissions Control System”, page 266

♦ Refer to ⇒ Fig. ““Bracket for NOx Sensor Control Module 2 -J881- and Particulate Sensor -G784- - Tightening Specification”“ , page 249

♦ Refer to ⇒ Body Exterior; Rep. Gr. 66 ; Noise Insulation; Overview - Noise Insulation .

♦ Refer to ⇒ Body Exterior; Rep. Gr. 66 ; Underbody Trim Panel; Overview - Underbody Trim Panels .

1.2.2 Front Exhaust Pipe, Removing and Installing, Separate Front Exhaust Pipe

Protected by copyright. Copyright by AUDI AG. Reproduction or commercial purposes, in part or in whole, is not permitted unless authorised by AUDI AG. AUDI AG does not guarantee or accept any liability with respect to the use of information in this document. Copyright by AUDI AG.

Removing

– Remove the air filter housing. Refer to ⇒ “3.2 Air Filter Housing, Removing and Installing”, page 229 .

cardiagn.com

- Wear safety gloves during the entire procedure.

– Remove the nuts that are accessible -2- from above for the front exhaust pipe. (-1 and 3- are removed later.)

– Remove the rear and left noise insulation. Refer to ⇒ Body Exterior; Rep. Gr. 66 ; Noise Insulation; Noise Insulation, Removing and Installing .

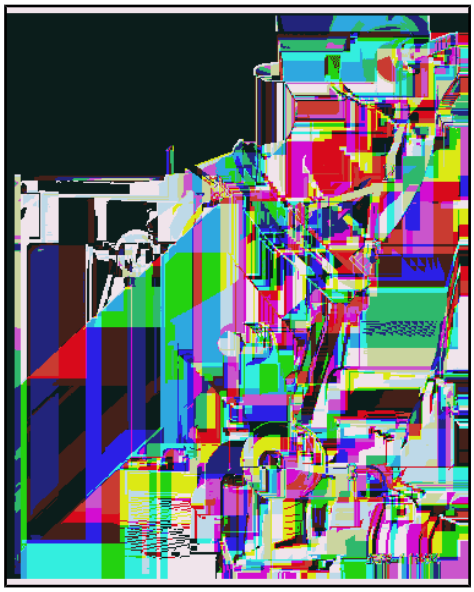

– Disconnect the connectors -1 and 2-.

– Remove the bolts -arrows-.

– Free up the wires.

– Tie up the bracket with the NOx Sensor Control Module 2 - J881- and Particulate Sensor - G784- to the front exhaust pipe.

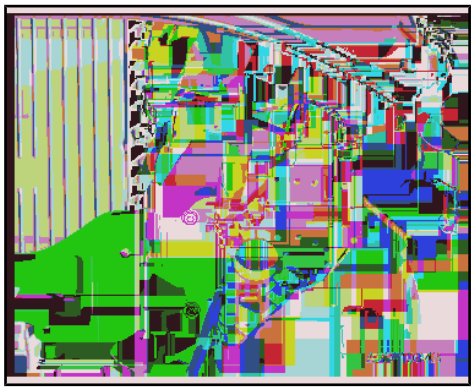

– Market version: release the retainer in the direction of -arrow A- and remove the Particulate Sensor - G784- -1- from the bracket -3-.

Protected by copyright. Copying for priva
permitted unless authorised by AUDI A
ss of info

Continuation for All Vehicles:

NOTICE

Risk of damaging the coupling due to improper handling.

– Coupling must not be bent more than 10°.

– Do not load the coupling on the cable.

– Remove the bolts -1- and nuts -2-.

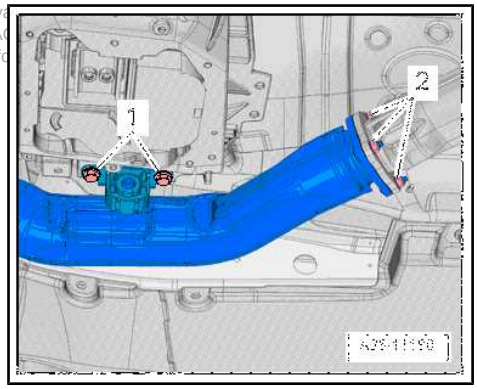

cardiagn.com

– Remove the nut -1- and the bolt -3-.

– Remove the front exhaust pipe.

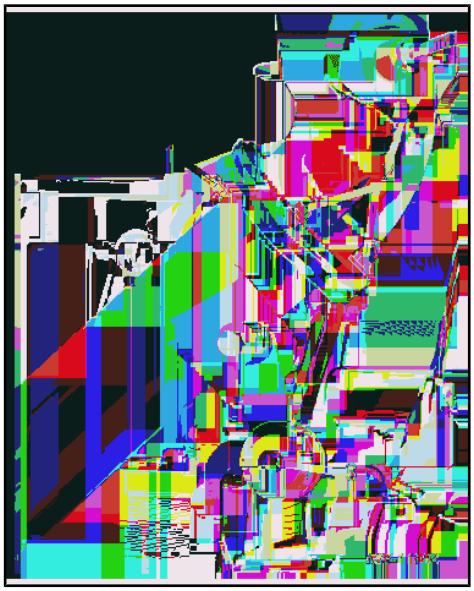

Installing

Install in reverse order of removal and note the following:

- Replace seals and self-locking nuts after disassembly.

– Install the exhaust system without tension. Refer to ⇒ “1.4 Exhaust System, Installing without Tension”, page 264 .

– Install the air filter housing. Refer to ⇒ “3.2 Air Filter Housing, Removing and Installing”, page 229 .

Tightening Specifications

♦ Refer to ⇒ “1.1 Overview - Muffler”, page 256

♦ Refer to ⇒ “2.1 Overview - Emissions Control System”, page 266

♦ Refer to ⇒ Fig. “Bracket for NOx Sensor Control Module 2 -J881- and Particulate Sensor -G784- - Tightening Specification”, page 249

♦ Refer to ⇒ Body Exterior; Rep. Gr. 66 ; Noise Insulation; Overview - Noise Insulation .

Protected by copyright. Copying for private or commercial purposes, in part or in whole, is not permitted unless authorised by AUDI AG. AUDI AG does not guarantee or accept any liability with respect to the correctness of information in this document. Copyright by AUDI AG.

1.3 Muffler, Removing and Installing

Removing

– Remove the left underbody trim panel. Refer to ⇒ Body Exterior; Rep. Gr. 66 ; Underbody Trim Panel; Underbody Trim Panels, Removing and Installing .

– Remove the bolts -arrows- on the rear diffuser.

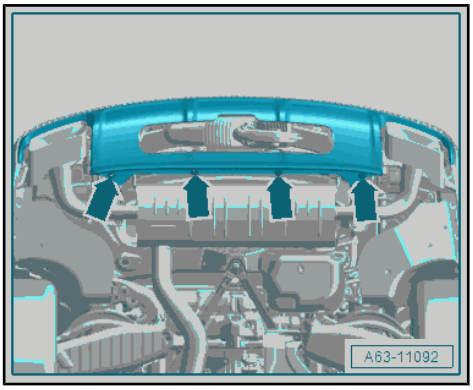

– Equipped on some models: disconnect the connector -arrow- for the Exhaust Door Control Unit - J883- .

• Wear safety gloves during the entire procedure.

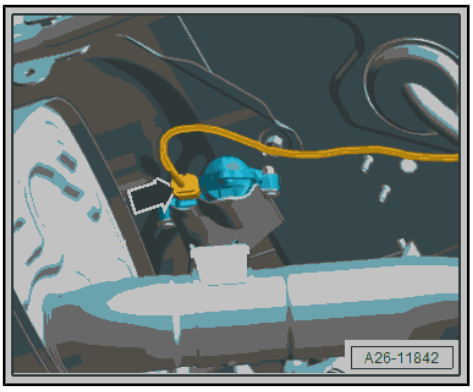

cardiagn.com

– Loosen the front clamping sleeve -arrows- and push toward the rear.
– Slightly lower the front exhaust pipe and remove the clamping sleeve.

– Remove the left and right bolts -2-.
– Remove the bolt -3- and the muffler -1-. While doing so, pay attention to the diffuser.

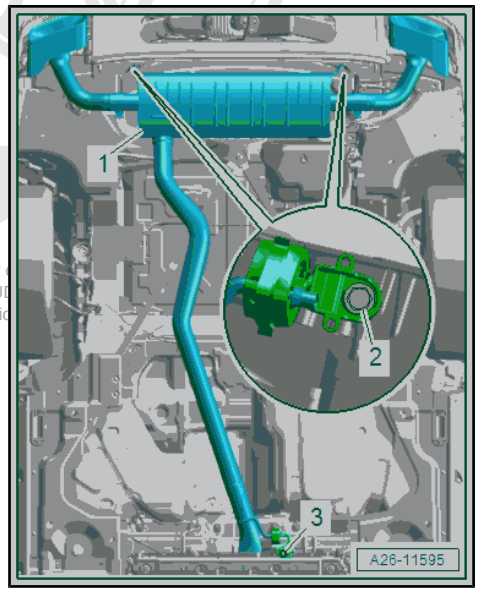

Installing

Install in reverse order of removal and note the following:

– Install the exhaust system without tension. Refer to ⇒ “1.4 Exhaust System, Installing without Tension”, page 264 .

Protected by copyright. Copying for private or
permitted unless authorised by AUDI AG. AU
with respect to the correctness of informatio

Tightening Specifications

♦ Refer to ⇒ “1.1 Overview - Muffler”, page 256
♦ Refer to ⇒ Body Exterior; Rep. Gr. 66 ; Underbody Trim Panel; Overview - Underbody Trim Panels .
♦ Refer to ⇒ Body Exterior; Rep. Gr. 63 ; Rear Bumper; Overview - Bumper Cover .

1.4 Exhaust System, Installing without Tension

Procedure

• Align the exhaust system when cold.

Exhaust System, Aligning

• Wear safety gloves during the entire procedure.
– Loosen the threaded connections on the front clamping sleeve.
– Push the exhaust system far enough forward -arrow- until the pretension on the retaining loop at the exhaust pipe is -a- = 6 to 10 mm.
– Position the front clamping sleeve (refer to ⇒ Fig. ““Clamping Sleeve Locations”“ , page 257) and tighten the threaded connections evenly.

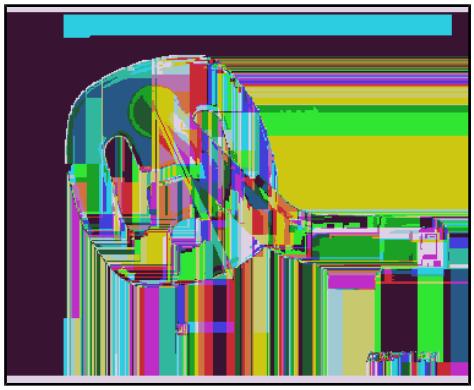

cardiagn.com

Aligning Tail Pipes - Only Vehicle without High-Voltage System

– Check the distance of left and right tail pipes to bumper:

- Dimension -a- 16 mm.
- Dimension -b- left = dimension -b- right.

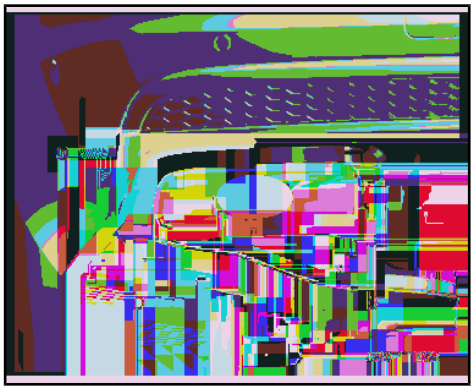

Tightening Specifications

◆ Refer to ⇒ “1.1 Overview - Muffler”, page 256

1.5 Exhaust System, Checking for Leaks

All procedures are described. Refer to ⇒ Servicing – 6-Cylinder TDI Common Rail Engine; Rep. Gr. 26 ; Exhaust Pipes/Mufflers; Cooling System, Exhaust System, Checking for Leaks .

Protected by copyright. Copying for private or commercial purposes, in part or in whole, is not permitted unless authorised by AUDI AG. AUDI AG does not guarantee or accept any liability with respect to the correctness of information in this document. Copyright by AUDI AG.

cardiagn.com

2 Emissions Control System

⇒ “2.1 Overview - Emissions Control System”, page 266

⇒ “2.2 Emissions Control Module, Removing and Installing”, page 268

⇒ “2.3 Catalytic Converter, Removing and Installing”, page 271

⇒ “2.4 Exhaust Door Control Unit J883 , Removing and Installing”, page 273

2.1 Overview - Emissions Control System

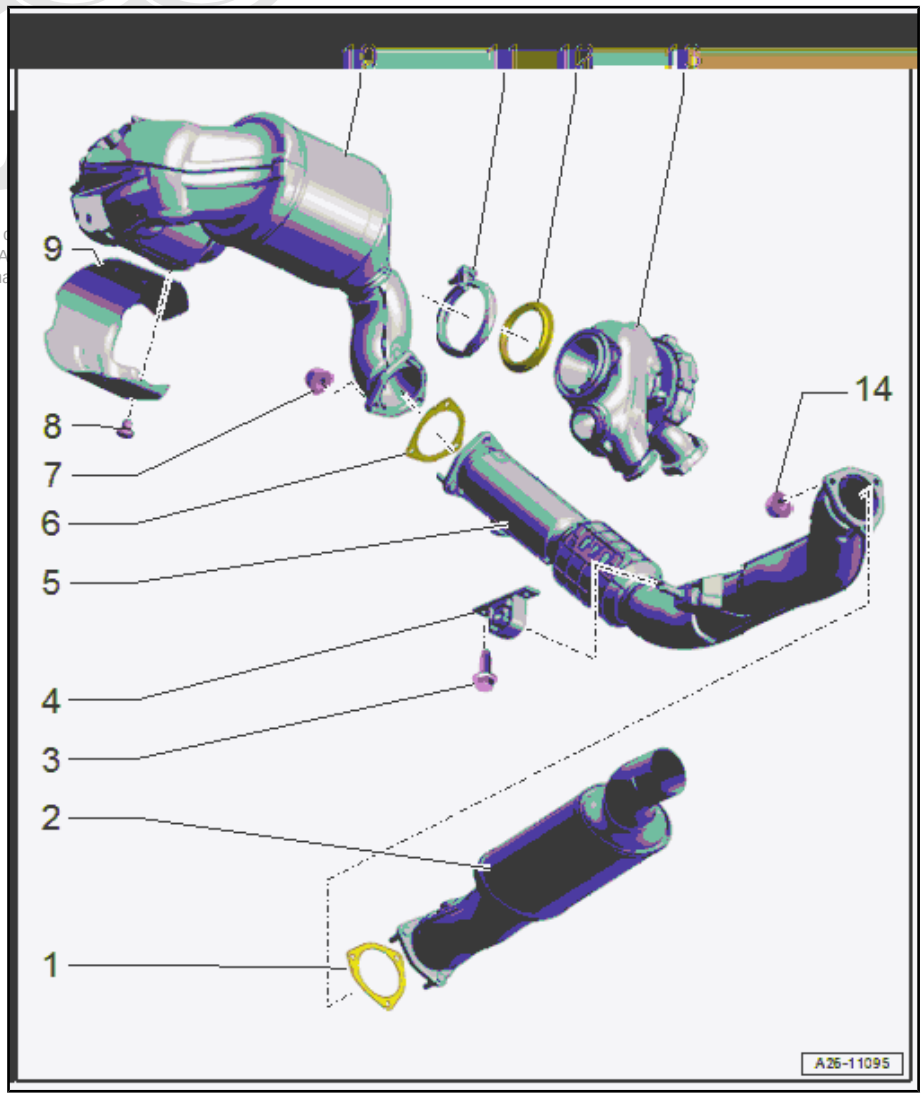

1 - Seal

- ❑ Replace after removing

2 - SCR Catalytic Converter

- ❑ Depending on the version unit with front exhaust pipe
- ❑ Protect from shocks and impact stress
- ❑ Removing and Installing

◆ For the unit with front exhaust pipe. Refer to ⇒ “1.2.1 Front Exhaust Pipe, Removing and Installing, Front Exhaust Pipe as a Unit with SCR Catalytic Converter”, page 259 .

◆ With separated SCR catalytic converter and front exhaust pipe. Refer to ⇒ “2.3 Catalytic Converter, Removing and Installing”, page 271 .

- ❑ Exhaust System, Installing without Tension. Refer to ⇒ “1.4 Exhaust System, Installing without Tension”, page 264 .

3 - Bolt

- ❑ 23 Nm

4 - Mount

- ❑ Replace if damaged
- ❑ Check the pretension. Refer to ⇒ “1.4 Exhaust System, Installing without Tension”, page 264 .

5 - Front Exhaust Pipe

- ❑ With a flex joint. Do not bend the decoupling element more than 10° or it will be damaged.
- ❑ Depending on the version unit with catalytic converter
- ❑ Removing and installing. Refer to ⇒ “1.2 Front Exhaust Pipe, Removing and Installing”, page 259 .
- ❑ Exhaust System, Installing without Tension. Refer to ⇒ “1.4 Exhaust System, Installing without Tension”, page 264 .

6 - Seal

- ❑ Replace after removing

cardiagn.com

7 - Nut

- ❑ 23 Nm
- ❑ Replace after removing

8 - Bolt

- ❑ 9 Nm
- ❑ Replace after removing

9 - Heat Shield

10 - Emissions Control Module

- ❑ With pressure line for Differential Pressure Sensor - G505- -item 4- ⇒ Item 4 (page 247)
- ❑ Removing and installing. Refer to ⇒ “2.2 Emissions Control Module, Removing and Installing”, page 268 .
- ❑ Perform the adaptation after replacing. Refer to Vehicle Diagnostic Tester

11 - Screw-Type Clamp

- ❑ Replace after removing
- ❑ Installation position. Refer to ⇒ Fig. ““Installation Position of Emissions Control Module Screw-Type Clamp”“ , page 268 .
- ❑ Tightening specification 15 Nm

12 - Seal

- ❑ Replace after removing

13 - Turbocharger

14 - Nut

- ❑ 23 Nm
- ❑ Replace after removing

Front Individual Mounting Components for Front Exhaust Pipe to Transmission

1 - Spacer Sleeve
2 - Pressure Spring
3 - Washer
4 - Bolt - 23 Nm
5 - Bolt - 23 Nm
6 - Spacer Sleeve
7 - Rubber Buffer
8 - Tab
9 - Spacer Sleeve

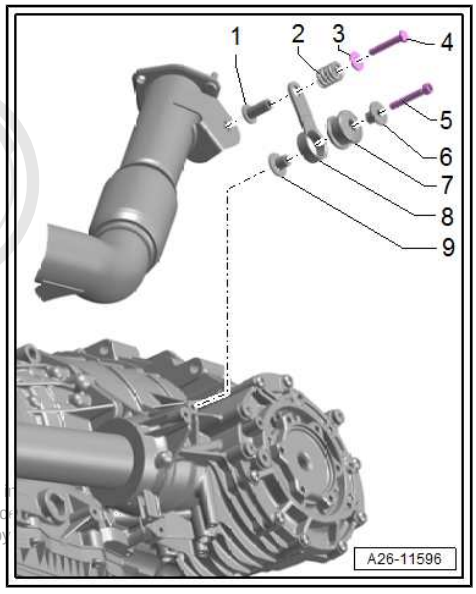

Protected by copyright. Copying for private or commercial purposes, in part or
permitted unless authorised by AUDI AG. AUDI AG does not guarantee or acc
with respect to the correctness of information in this document. Copyright by

cardiagn.com

Installation Position of Emissions Control Module Screw-Type Clamp

- Angle -α- = 10 ± 10°.

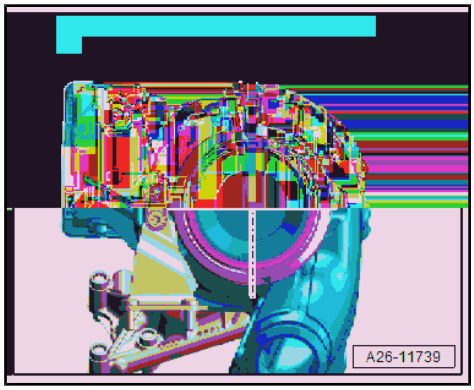

Individual Mounting Components for Emissions Control Module

1 - Captive Nut (Integrated in Emissions Control Module)
2 - Spacer Sleeve
3 - Pressure Spring
4 - Washer
5 - Bolt - 23 Nm
6 - Bolt - 23 Nm
7 - Spacer Sleeve
8 - Rubber Buffer
9 - Tab
10 - Spacer Sleeve

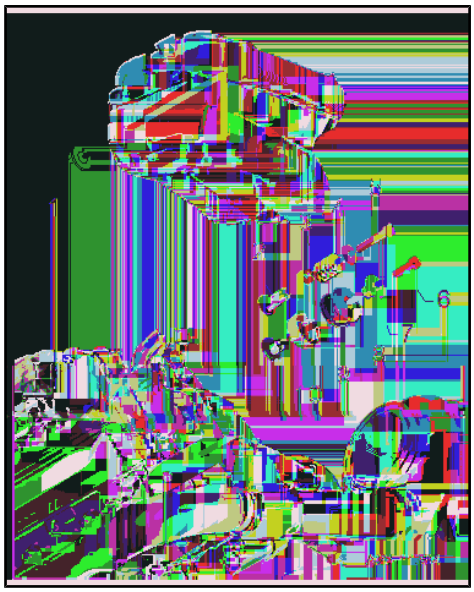

2.2 Emissions Control Module, Removing and Installing

Special tools and workshop equipment required

♦ Vehicle Diagnostic Tester

Removing

– Remove the rear noise insulation. Refer to ⇒ Body Exterior; Rep. Gr. 66 ; Noise Insulation; Noise Insulation, Removing and Installing .

Protected by copyright. Copying for private or commercial purposes, in part or in whole, is not permitted unless authorised by AUDI AG. AUDI AG does not guarantee or accept any liability with respect to the correctness of information in this document. Copyright by AUDI AG.

cardiagn.com

- Wear safety gloves during the entire procedure.

– Remove the nut -1-. (The nuts -2- will be removed later.)

– Remove the plenum chamber bulkhead. Refer to ⇒ Body Exterior; Rep. Gr. 50 ; Bulkhead; Plenum Chamber Bulkhead, Removing and Installing .

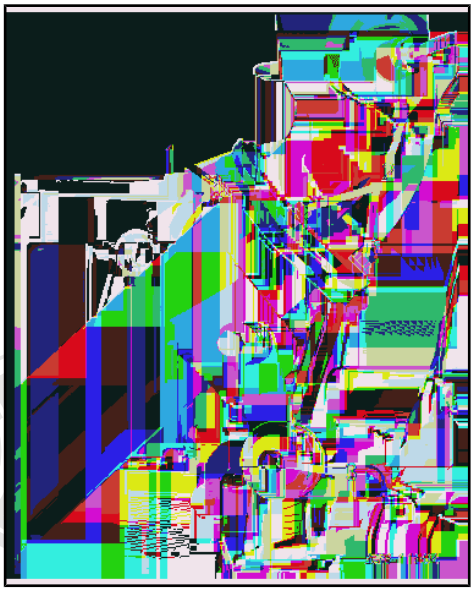

– Remove the Exhaust Gas Temperature Sensor 4 - G648- -1-.

Protected by copyright. Copying for private or
permitted unless authorised by AUDI AG. AUD
with respect to the correctness of informatio

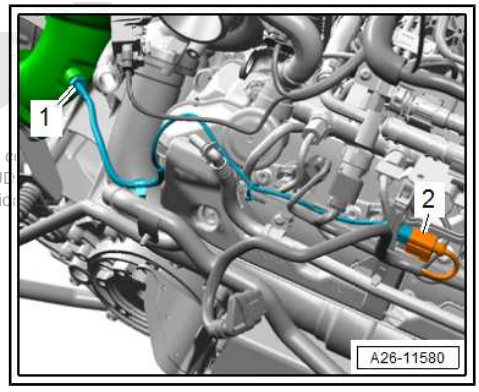

– Market-specific: remove the Catalyst Temperature Sensor 1 - G20- -1-. (Shown with the engine removed.)

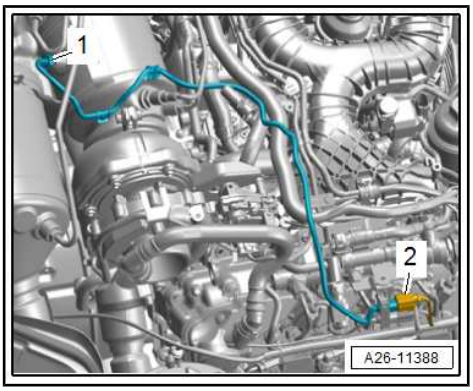

– Remove the connectors -1, 2 and 3- from the bracket and disconnect them. Then free up the wires.

cardiagn.com

– Remove the bolt -2- and loosen the clamp.
– Remove the Reducing Agent Injector - N474- -1- and move it to the side.

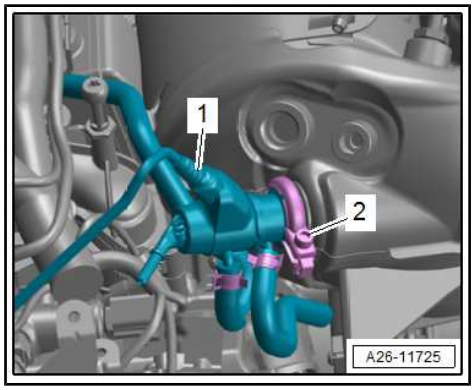

Protected by copyright. Copying for private or commercial purposes, in part or in whole, is not permitted unless authorised by AUDI AG. AUDI AG does not guarantee or accept any liability with respect to the correctness of information in this document. Copyright by AUDI AG.

Vehicle without High-Voltage System

– Disconnect the connector -3-.
– Remove the bolt -2-, free up the wiring harness at the clips -arrows- and remove the NOx Sensor Control Module - J583- from the bracket.

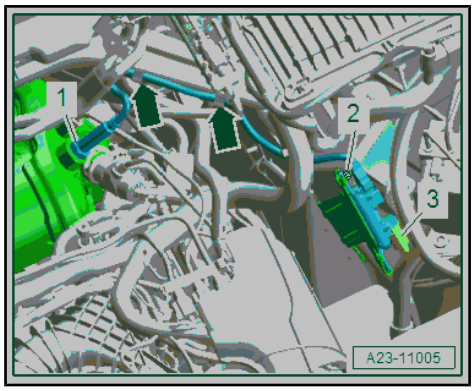

Vehicle with High-Voltage System

– Disconnect the connector -3-.
– Remove the nut -2- and remove the NOx Sensor Control Module - J583- from the bracket.

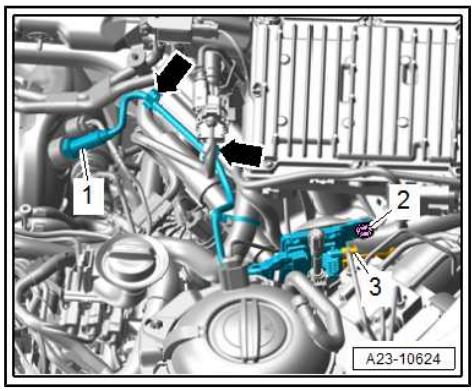

Continuation for All Vehicles

– Remove the nuts that are accessible -2- from above for the front exhaust pipe.

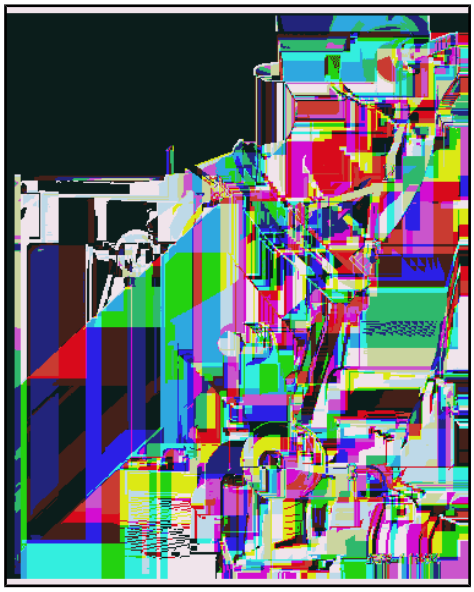

cardiagn.com

– Remove the bolt -3- from the tab.

– Open the screw-type clamp -1- and position on the emissions control module entrance funnel.

– Remove the emissions control module -2-.

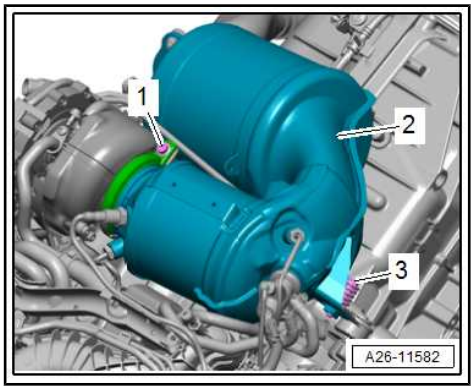

Installing

Install in reverse order of removal and note the following:

- Replace seals and self-locking nuts after disassembly.
- If the emissions control module is replaced the adaptation value must be adapted. Refer to Vehicle Diagnostic Tester .

– Install the Reducing Agent Injector - N474- . Refer to ⇒ “3.6 Reducing Agent Injector N474 , Removing and Installing”, page 279 .

Tightening Specifications

- Refer to ⇒ “1.1 Overview - Muffler”, page 256
- Refer to ⇒ “2.1 Overview - Emissions Control System”, page 266
- Refer to ⇒ “4.1 Overview - Exhaust Temperature Regulation”, page 281
- Refer to ⇒ “8.1 Overview - Heated Oxygen Sensor”, page 247
- Refer to ⇒ Body Exterior; Rep. Gr. 50 ; Bulkhead; Overview - Bulkhead .
- Refer to ⇒ Body Exterior; Rep. Gr. 66 ; Noise Insulation; Overview - Noise Insulation .

2.3 Catalytic Converter, Removing and Installing

Special tools and workshop equipment required

- Vehicle Diagnostic Tester

Only Vehicles with SCR Catalytic Converter and Separate Front Exhaust Pipe.

Removing

– Remove the left noise insulation. Refer to ⇒ Body Exterior; Rep. Gr. 66 ; Noise Insulation; Noise Insulation, Removing and Installing .

Vehicle without High-Voltage System

– Disconnect the connectors -1 and 2-.

– Remove the bolts -arrows-.

– Free up the wires.

– Tie up the bracket with the NOx Sensor Control Module 2 - J881- and the Particulate Sensor - G784- from the tunnel crossmember.

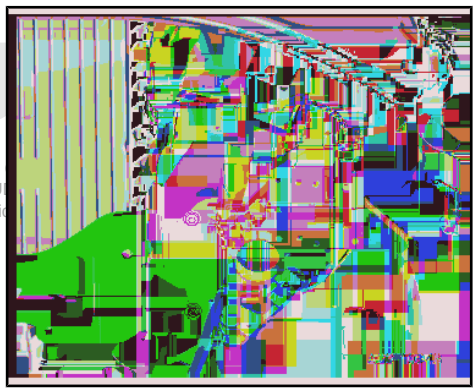

Protected by copyright. Copying for private or commercial purposes, in part, is not permitted unless authorized by AUDI AG. AUDI AG does not guarantee or accept any liability with respect to the correctness of information in this document.
cardiagn.com

– Release the retainer in the direction of -arrow A- and remove the Particulate Sensor - G784- -1- from the bracket -3-.

Continuation for All Vehicles

• Wear safety gloves during the entire procedure.

– Remove the nuts -2-.

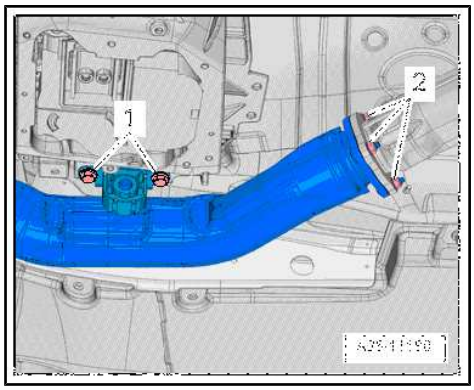

– Loosen the clamping sleeve -arrows- and push toward the rear.

– Remove the SCR catalytic converter.

Installing

Install in reverse order of removal and note the following:

Protected by copyright. Copying for private or commercial purposes, in part or in whole, is not permitted unless authorised by AUDI AG. AUDI AG does not guarantee or accept any liability with respect to the correctness of information in this document. Copyright by AUDI AG.

• Replace seals and self-locking nuts after disassembly.

• If the SCR catalytic converter is replaced the adaptation value must be adapted using. Refer to Vehicle Diagnostic Tester .

– Install the Reducing Agent Injector - N474- . Refer to ⇒ “3.6 Reducing Agent Injector N474 , Removing and Installing”, page 279 .

Tightening Specifications

♦ Refer to ⇒ “2.1 Overview - Emissions Control System”, page 266

♦ Refer to ⇒ Body Exterior; Rep. Gr. 66 ; Noise Insulation; Overview - Noise Insulation .

cardiagn.com

2.4 Exhaust Door Control Unit - J883- , Removing and Installing

Removing

– Disconnect the connector -1-.

– Remove the nuts -arrows-, and remove the Exhaust Door Control Unit - J883- .

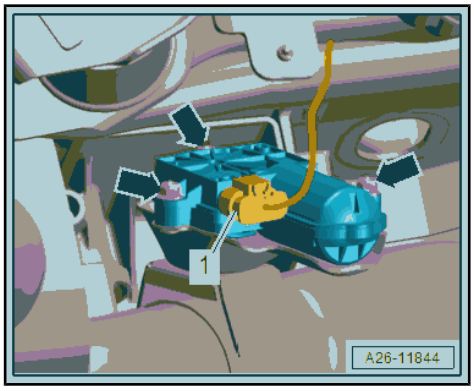

Installing

Install in reverse order of removal and note the following:

• Replace the nuts after removing.

– Bring the Exhaust Door Control Unit - J883- into the installation position.

• The spring -2- must engage the groves -arrows- of the exhaust door -1-.

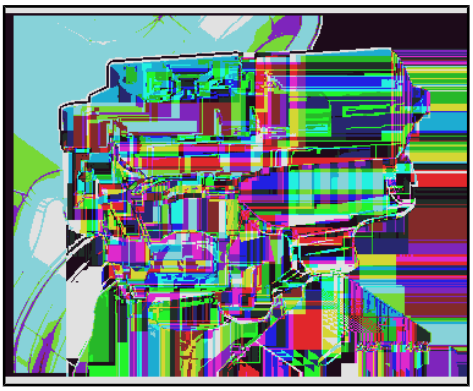

Tightening Specifications

♦ Refer to
⇒ “1.1.2 Overview - Muffler, Vehicles with High-Voltage System”, page 258

Protected by copyright. Copying for private or commercial purposes, in part or in whole, is not permitted unless authorised by AUDI AG. AUDI AG does not guarantee or accept any liability with respect to the correctness of information in this document. Copyright by AUDI AG.

cardiagn.com

3 Selective Catalytic Reduction System

⇒ “3.1 Overview - Reducing Agent Tank”, page 274

⇒ “3.2 Overview - Reducing Agent Delivery Line”, page 275

⇒ “3.3 Overview - Reducing Agent Metering System Control Module J880 ”, page 276

⇒ “3.4 Reducing Agent Tank, Draining”, page 276

⇒ “3.5 Reducing Agent Tank, Removing and Installing”, page 277

⇒ “3.6 Reducing Agent Injector N474 , Removing and Installing”, page 279

⇒ “3.7 Reducing Agent Metering System Control Module J880 , Removing and Installing”, page 279

⇒ “3.8 Reducing Agent Quality Sensor G849 , Removing and Installing”, page 280

3.1 Overview - Reducing Agent Tank

1 - Bolt

- ❑ 2 Nm

2 - Reducing Agent Quality Sensor - G849-

- ❑ Market-Specific Version
- ❑ Removing and installing. Refer to ⇒ “3.8 Reducing Agent Quality Sensor G849 , Removing and Installing”, page 280 .

3 - Seal

- ❑ Replace after removing

4 - Reducing Agent Tank

- ❑ With Reducing Agent Metering System Delivery Unit - GX19-
- ❑ The following components are integrated in the Reducing Agent Metering System Delivery Unit - GX19- :

- ◆ Filter
- ◆ Reducing Agent Tank Sensor - G684-
- ◆ Reducing Agent Temperature Sensor - G685-
- ◆ Reducing Agent Metering System Pressure Sensor - G686-
- ◆ Reducing Agent Pump - V437-
- ◆ Reducing Agent Tank Heater (Heating Circuit 1) - Z102-

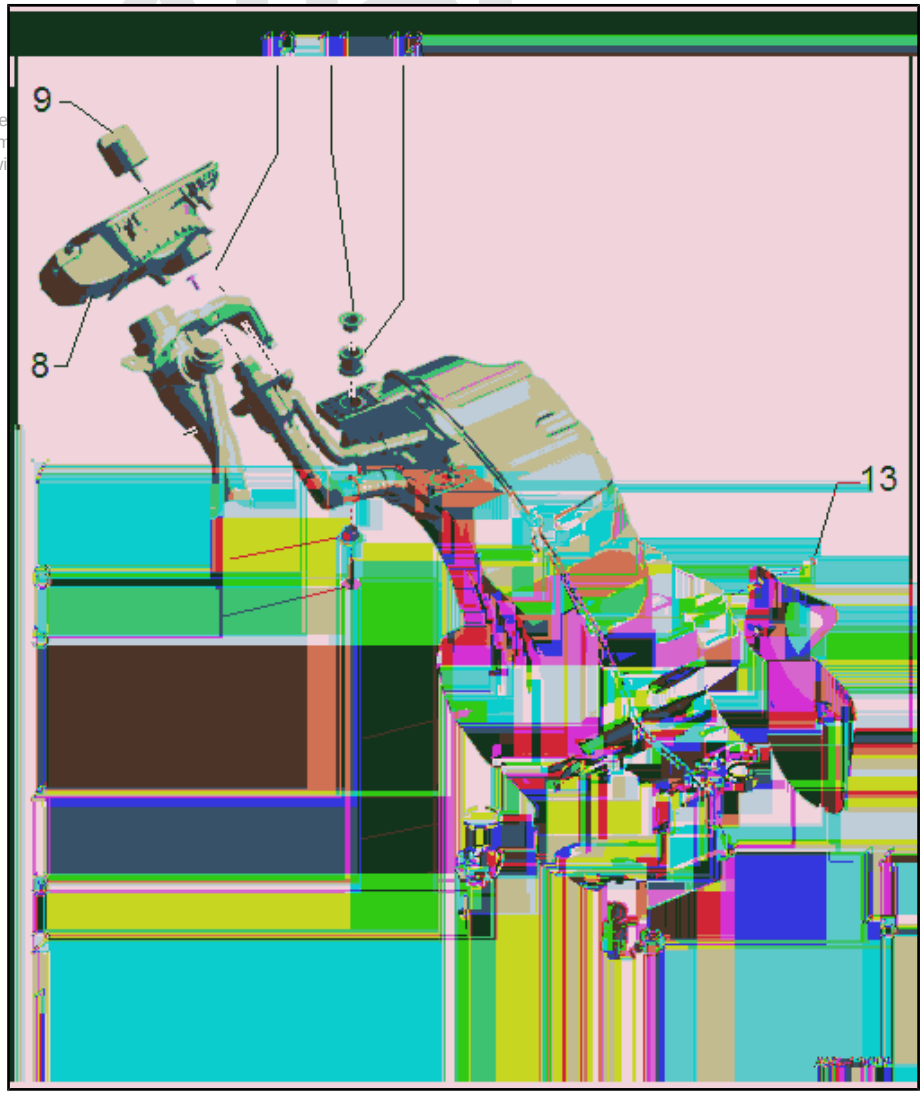

cardiagn.com

- Reducing Agent Tank Heater 2 (Heating Circuit 3) - Z167-
  - Component location: Behind the right rear wheel housing liner
  - Removing and installing. Refer to ⇒ “3.5 Reducing Agent Tank, Removing and Installing”, page 277 .

5 - Bolt
- 20 Nm

6 - Spacer Sleeve

7 - Filler Neck

8 - Fuel Filler Door Unit

9 - Cap

10 - Bolt
- 8 Nm

11 - Grommet

12 - Spacer Sleeve

13 - Bolt
- 8 Nm

14 - Heat Shield
- For the reducing agent tank

15 - Delivery Line
- For the reducing agent

3.2 Overview - Reducing Agent Delivery Line

All components are described. Refer to ⇒ Servicing – 6-Cylinder TDI Common Rail Engine; Rep. Gr. 26 ; SCR System (Selective Catalytic Reduction); Overview - Reducing Agent Delivery Line .

Protected by copyright. Copying for private or commercial purposes, in part or in whole, is not permitted unless authorised by AUDI AG. AUDI AG does not guarantee or accept any liability with respect to the correctness of information in this document. Copyright by AUDI AG.

cardiagn.com

3.3 Overview - Reducing Agent Metering System Control Module - J880-

1 - Connector

2 - Base Plate

- ❑ For the Reducing Agent Metering System Control Module - J880-
- ❑ Reducing agent tank component

3 - Nut

- ❑ 8 Nm

4 - Reducing Agent Metering System Control Module - J880-

- ❑ At the bottom of the reducing agent tank
- ❑ Checking. Refer to Vehicle Diagnostic Tester .
- ❑ After replacing, the Reducing Agent Metering System Control Module - J880- must be parameterized. Refer to Vehicle Diagnostic Tester .
- ❑ Removing and installing. Refer to ⇒ “3.7 Reducing Agent Metering System Control Module J880 , Removing and Installing”, page 279 .

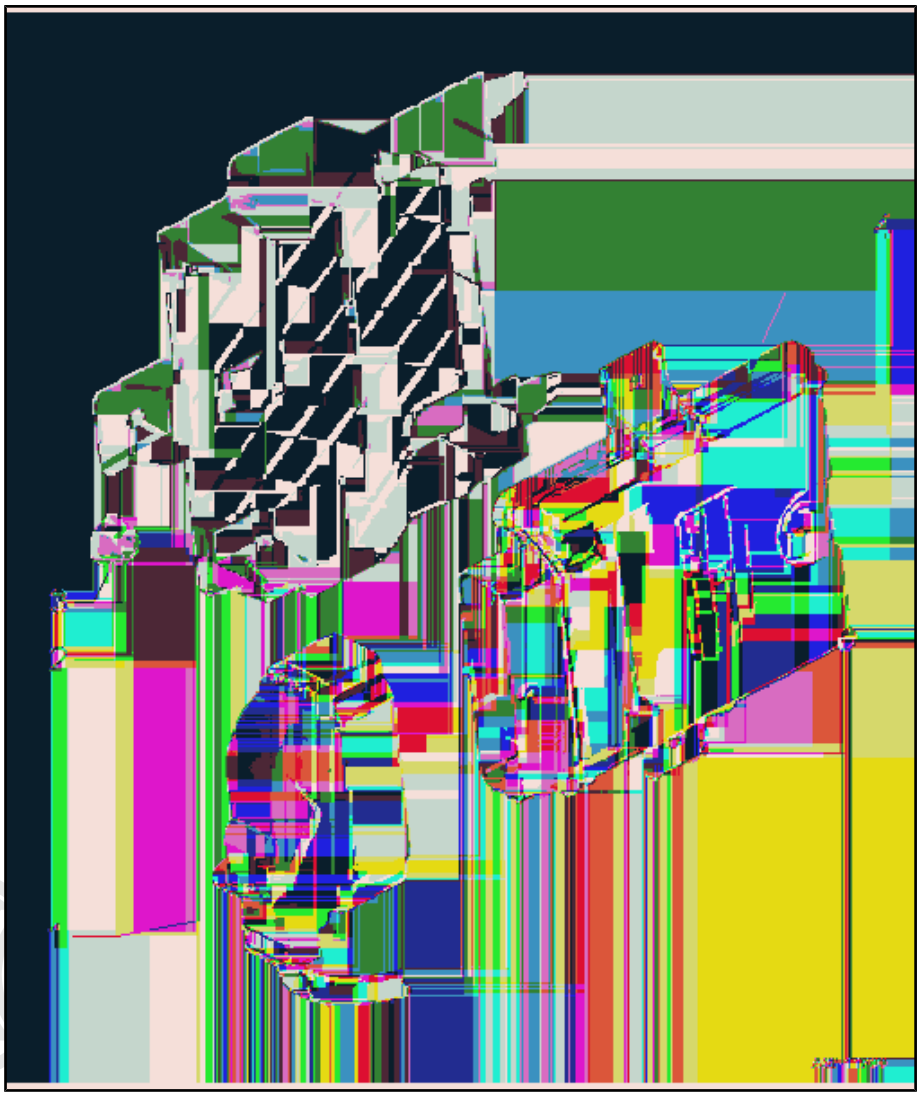

3.4 Reducing Agent Tank, Draining

Procedure

CAUTION

There is a risk on injury due to escaping reducing agent when opening the lines.

Reducing agents may cause eye and skin irritation as well as injury to the respiratory system and possible poisoning.

- **Wear protective eyewear.**
- **Wear safety gloves.**
- **Reduce the pressure: place clean cloths around the connection point and carefully open the connection point.**

– Switch off the ignition.

– Open the fuel filler door.

permitted unless authorised by AUDI AG. AUDI AG does not guarantee or accept any liability
or in whole, is not
ght by AUDI AG.
cardiagn.com

– Remove the cap -arrow- for the reducing agent filler neck.

– Remove the right rear wheel housing liner. Refer to ⇒ Body Exterior; Rep. Gr. 66 ; Wheel Housing Liner; Rear Wheel Housing Liner, Removing and Installing .

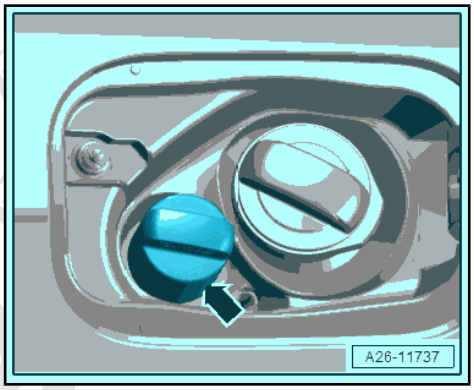

– Place the drip tray underneath.

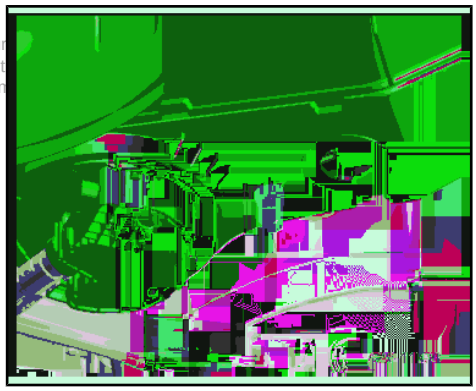

Protected by copyright. Copying for private or commercial pur
oes not
s docun

CAUTION

There is a risk of injury due to escaping reducing agent.

Reducing agents may cause eye and skin irritation as well as injury to the respiratory system and possible poisoning.

- **Wear protective eyewear.**
- **Wear safety gloves.**
- **Wear protective work clothing.**
- **Make sure there is a fresh air supply. Turn on exhaust extraction when in closed spaces.**

– Remove cap -arrow-, by pressing the release button, drain the reducing agent into the drip tray, and remount the cap.

Assembling

Assemble in the reverse order of removal. Note the following:

– After filling with reducing agent or replacing the components “adapt the adaptation value”. Refer to ⇒ Servicing – 6-Cylinder TDI Common Rail Engine; Rep. Gr. 00 ; Repair Information; Adaptation Value for SCR System, Adapting .

Tightening Specifications

♦ Refer to ⇒ Body Exterior; Rep. Gr. 66 ; Wheel Housing Liner; Overview - Rear Wheel Housing Liner .

3.5 Reducing Agent Tank, Removing and Installing

Special tools and workshop equipment required

♦ Engine Bung Set - VAS6122-

Removing

CAUTION

There is a risk of injury due to escaping reducing agent.

Reducing agents may cause eye and skin irritation as well as injury to the respiratory system and possible poisoning.

- **Wear protective eyewear.**
- **Wear safety gloves.**
- **Wear protective work clothing.**
- **Make sure there is a fresh air supply. Turn on exhaust extraction when in closed spaces.**

cardiagn.com

– Drain the reducing agent tank. Refer to ⇒ “3.4 Reducing Agent Tank, Draining”, page 276 .

– Disconnect the delivery line -2-. Refer to ⇒ Servicing – 6-Cylinder TDI Common Rail Engine; Rep. Gr. 26 ; SCR System (Selective Catalytic Reduction); Overview - Reducing Agent Delivery Line .

– Disconnect the connectors -1 and 3- and free up the wiring harness.

– Always seal the open lines and connections with clean plugs from the -VAS6122- .

– Market-specific: disconnect the connector -arrow- for the Reducing Agent Quality Sensor - G849- .

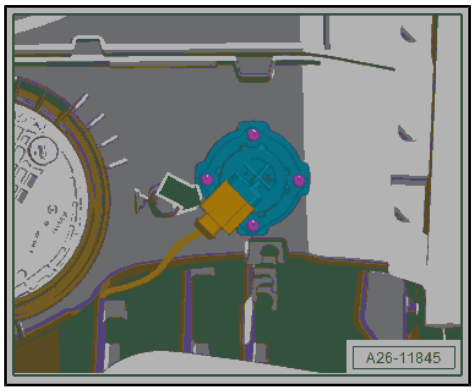

Protected by copyright. Copying for private or commercial purposes, in part or in whole, is not permitted without prior written consent of AUDI AG. AUDI AG does not guarantee or accept any liability with respect to the correctness of information in this document. Copyright by AUDI AG.

– Remove the nuts -arrows-, and remove the cover -1- for the air supply unit.

– Free up the hose -3-.

– Remove the bolts -arrows- and carefully remove the filler neck -1- from the fuel filler door unit -2-.

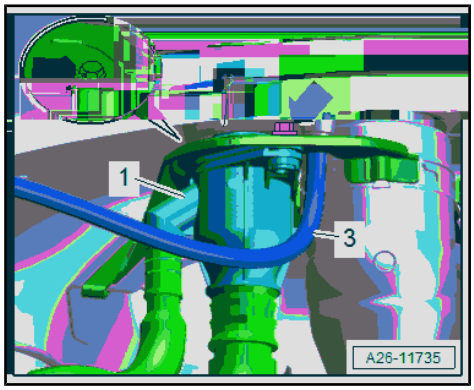

cardiagn.com

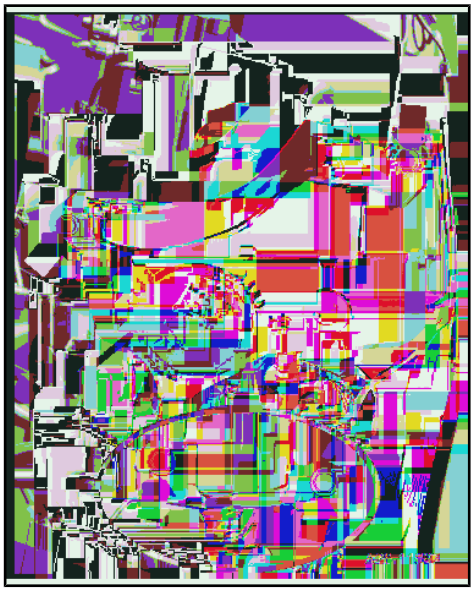

- The reducing agent tank must be empty to remove it.

– With a second technician holding the reducing agent tank -1-, remove the bolts -arrow-.

– Remove the reducing agent tank.

– Always seal the open lines and connections with clean plugs from the -VAS6122- .

Installing

Install in reverse order of removal and note the following:

– Connect the delivery line. Refer to ⇒ Servicing – 6-Cylinder TDI Common Rail Engine; Rep. Gr. 26 ; SCR System (Selective Catalytic Reduction); Overview - Reducing Agent Delivery Line .

– Make sure the lines are clipped to the reducing agent tank.

– Install the cover for the air supply unit. Refer to ⇒ Suspension, Wheels, Steering; Rep. Gr. 43 ; Air Suspension; Air Supply Unit, Removing and Installing .

– After filling with reducing agent or replacing the components “adapt the adaptation value”. Refer to ⇒ Servicing – 6-Cylinder TDI Common Rail Engine; Rep. Gr. 00 ; Repair Information; Adaptation Value for SCR System, Adapting .

Tightening Specifications

♦ Refer to ⇒ “3.1 Overview - Reducing Agent Tank”, page 274

3.6 Reducing Agent Injector - N474- , Removing and Installing

Removing

– Remove the air filter housing. Refer to ⇒ “3.2 Air Filter Housing, Removing and Installing”, page 229 .

All additional procedures are described. Refer to ⇒ Servicing – 6-Cylinder TDI Common Rail Engine; Rep. Gr. 26 ; SCR System (Selective Catalytic Reduction); Reducing Agent Injector - N474- , Removing and Installing .

Installing

Additional procedures:

– Install the air filter housing. Refer to ⇒ “3.2 Air Filter Housing, Removing and Installing”, page 229 .

3.7 Reducing Agent Metering System Control Module - J880- , Removing and Installing

Special tools and workshop equipment required

♦ Vehicle Diagnostic Tester

Removing

– Switch off the ignition.

– Remove the right luggage compartment side trim panel. Refer to ⇒ Body Interior; Rep. Gr. 70 ; Luggage Compartment Trim Panels; Luggage Compartment Side Trim Panel, Removing and Installing .

Protected by copyright. Copying for private or commercial purposes, in part or in whole, is not permitted unless authorised by AUDI AG. AUDI AG does not guarantee or accept any liability with regard to the correctness of information in this document. Copyright by AUDI AG.

cardiagn.com

– Release the retainers in the direction of -arrow- and remove the Reducing Agent Metering System Control Module - J880- -2-.

– Disconnect the connector -1-.

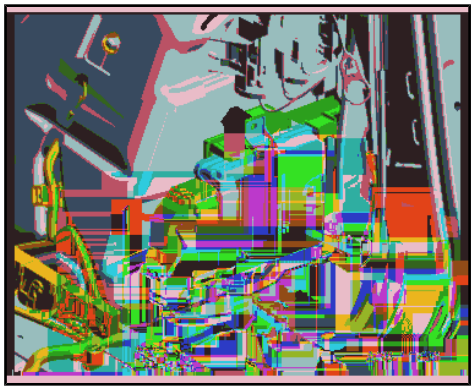

Installing

Install in reverse order of removal and note the following:

- If the Reducing Agent Metering System Control Module - J880- is replaced the adaptation value must be adapted. Refer to ⇒ Servicing – 6-Cylinder TDI Common Rail Engine; Rep. Gr. 00 ; Repair Information; SCR System Adaptation Value, Adapting .

Tightening Specifications

♦ Refer to ⇒ Body Interior; Rep. Gr. 70 ; Luggage Compartment Trim Panels; Overview - Luggage Compartment Side Trim Panel .

3.8 Reducing Agent Quality Sensor - G849- , Removing and Installing

Removing

– Drain the reducing agent tank. Refer to ⇒ “3.4 Reducing Agent Tank, Draining”, page 276 .

– Disconnect the connector -1-.

– Remove the bolts -arrows- and the Reducing Agent Quality Sensor - G849- .

Installing

Install in reverse order of removal and note the following:

- Replace the seal after removal.

– After filling with reducing agent or replacing the components “adapt the adaptation value”. Refer to ⇒ Servicing – 6-Cylinder TDI Common Rail Engine; Rep. Gr. 00 ; Repair Information; Adaptation Value for SCR System, Adapting .

Tightening Specifications

♦ Refer to ⇒ “3.1 Overview - Reducing Agent Tank”, page 274

cardiagn.com

4 Exhaust Temperature Regulation

⇒ “4.1 Overview - Exhaust Temperature Regulation”, page 281

⇒ “4.2 Exhaust Gas Temperature Sensor, Removing and Installing”, page 282

⇒ “4.3 Catalyst Temperature Sensor 1 G20 , Removing and Installing”, page 284

4.1 Overview - Exhaust Temperature Regulation

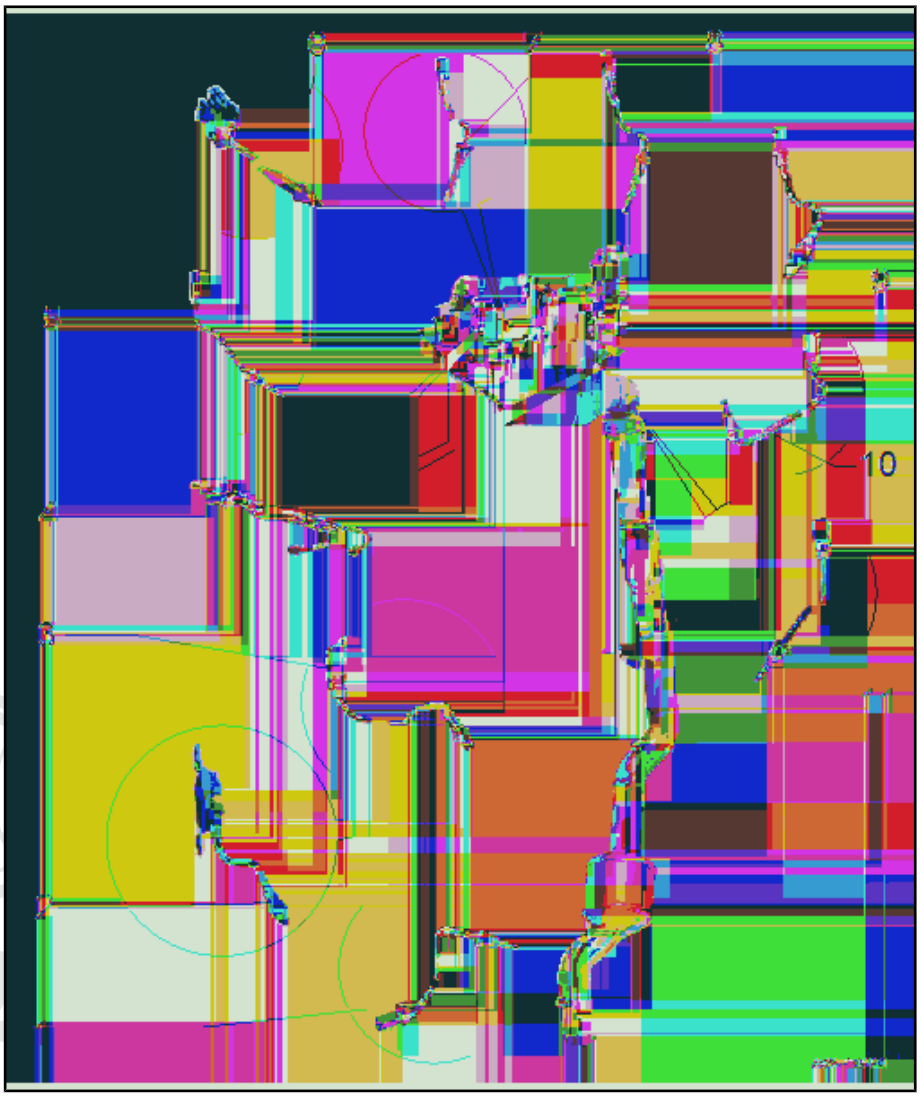

1 - Exhaust Gas Temperature Sensor 5 - G815-

- Discontinued with newer versions
- Removing and installing. Refer to ⇒ “4.2.5 Exhaust Gas Temperature Sensor 5 G815 , Removing and Installing”, page 283 .
- Tightening specifications. Refer to ⇒ Servicing – 6-Cylinder TDI Common Rail Engine; Rep. Gr. 26 ; Exhaust Temperature Regulation; Overview - Exhaust Temperature Regulation .

2 - NOx Sensor 2 - G687- with NOx Sensor Control Module 2 - J881-

- Removing and installing. Refer to ⇒ “8.3 NOx Sensor, Removing and Installing”, page 249 .

3 - Particulate Sensor - G784-

- Different installation position
- Removing and installing. Refer to ⇒ “8.4 Particulate Sensor G784 , Removing and Installing”, page 251 .

4 - Differential Pressure Sensor - G505-

- Removing and installing. Refer to ⇒ “6.6 Differential Pressure Sensor G505 , Removing and Installing”, page 243 .

5 - Exhaust Gas Temperature Sensor 3 - G495-

- Removing and installing. Refer to ⇒ Servicing – 6-Cylinder TDI Common Rail Engine; Rep. Gr. 26 ; Exhaust Gas Temperature Sensor; Exhaust Gas Temperature Sensor, Removing and Installing .
- Tightening specifications. Refer to ⇒ Servicing – 6-Cylinder TDI Common Rail Engine; Rep. Gr. 26 ; Exhaust Temperature Regulation; Overview - Exhaust Temperature Regulation .

6 - NOx Sensor - G295- with NOx Sensor Control Module - J583-

- Removing and installing. Refer to ⇒ “8.3.1 NOx Sensor G295 , Removing and Installing”, page 249 .

cardiagn.com
Copyright. Copying for private or commercial purposes, in part or in whole, is not permitted unless authorised by AUDI AG. AUDI AG does not guarantee or accept any liability with respect to the correctness of information in this document. Copyright by AUDI AG.

7 - Catalyst Temperature Sensor 1 - G20-

- ❑ 45 Nm
- ❑ Market-Specific Version
- ❑ Removing and installing. Refer to ⇒ “4.3 Catalyst Temperature Sensor 1 G20 , Removing and Installing”, page 284 .

8 - Exhaust Gas Temperature Sensor 2 - G448-

- ❑ Removing and installing. Refer to ⇒ Servicing – 6-Cylinder TDI Common Rail Engine; Rep. Gr. 26 ; Exhaust Gas Temperature Sensor; Exhaust Gas Temperature Sensor, Removing and Installing .
- ❑ Tightening specifications. Refer to ⇒ Servicing – 6-Cylinder TDI Common Rail Engine; Rep. Gr. 26 ; Exhaust Temperature Regulation; Overview - Exhaust Temperature Regulation .

9 - Heated Oxygen Sensor - G39- with Oxygen Sensor Heater - Z19-

- ❑ Removing and installing. Refer to ⇒ “8.2 Heated Oxygen Sensor, Removing and Installing”, page 249 .

10 - Exhaust Gas Temperature Sensor 1 - G235-

- ❑ Removing and installing. Refer to ⇒ Servicing – 6-Cylinder TDI Common Rail Engine; Rep. Gr. 26 ; Exhaust Gas Temperature Sensor; Exhaust Gas Temperature Sensor, Removing and Installing .
- ❑ Tightening specifications. Refer to ⇒ Servicing – 6-Cylinder TDI Common Rail Engine; Rep. Gr. 26 ; Exhaust Temperature Regulation; Overview - Exhaust Temperature Regulation .

11 - Exhaust Gas Temperature Sensor 4 - G648-

- ❑ Removing and installing. Refer to ⇒ “4.2.4 Exhaust Gas Temperature Sensor 4 G648 , Removing and Installing”, page 283 .
- ❑ Tightening specifications. Refer to ⇒ Servicing – 6-Cylinder TDI Common Rail Engine; Rep. Gr. 26 ; Exhaust Temperature Regulation; Overview - Exhaust Temperature Regulation .

4.2 Exhaust Gas Temperature Sensor, Removing and Installing

⇒ “4.2.1 Exhaust Gas Temperature Sensor 1 G235 , Removing and Installing”, page 282

⇒ “4.2.2 Exhaust Gas Temperature Sensor 2 G448 , Removing and Installing”, page 282

⇒ “4.2.3 Exhaust Gas Temperature Sensor 3 G495 , Removing and Installing”, page 283

⇒ “4.2.4 Exhaust Gas Temperature Sensor 4 G648 , Removing and Installing”, page 283

Protected by copyright. Copying for private or commercial purposes, in part or in whole, is not permitted unless authorized by AUDI AG. AUDI AG does not guarantee or accept any liability whatsoever with respect to the contents of information in this document. Copyright by AUDI AG.

4.2.1 Exhaust Gas Temperature Sensor 1 - G235- , Removing and Installing

All procedures are described. Refer to ⇒ Servicing – 6-Cylinder TDI Common Rail Engine; Rep. Gr. 26 ; Exhaust Gas Temperature Sensor; Exhaust Gas Temperature Sensor, Removing and Installing .

4.2.2 Exhaust Gas Temperature Sensor 2 - G448- , Removing and Installing

Removing

– Remove the air filter housing. Refer to ⇒ “3.2 Air Filter Housing, Removing and Installing”, page 229 .

All additional procedures are described. Refer to ⇒ Servicing – 6-Cylinder TDI Common Rail Engine; Rep. Gr. 26 ; Exhaust Gas Temperature Sensor; Exhaust Gas Temperature Sensor, Removing and Installing .

cardiagn.com

Installing

Additional procedures:

– Install the air filter housing. Refer to ⇒ “3.2 Air Filter Housing, Removing and Installing”, page 229 .

4.2.3 Exhaust Gas Temperature Sensor 3 - G495- , Removing and Installing

– Remove the air filter upper section. Refer to ⇒ “3.2 Air Filter Housing, Removing and Installing”, page 229 .

All procedures are described. Refer to ⇒ Servicing – 6-Cylinder TDI Common Rail Engine; Rep. Gr. 26 ; Exhaust Gas Temperature Sensor; Exhaust Gas Temperature Sensor, Removing and Installing .

4.2.4 Exhaust Gas Temperature Sensor 4 - G648- , Removing and Installing

Removing

– Remove the right engine cover. Refer to ⇒ “3.1 Engine Cover, Removing and Installing”, page 77 .

All additional procedures are described. Refer to ⇒ Servicing – 6-Cylinder TDI Common Rail Engine; Rep. Gr. 26 ; Exhaust Gas Temperature Sensor; Exhaust Gas Temperature Sensor, Removing and Installing .

Installing

Additional procedures:

– Install the engine cover. Refer to ⇒ “3.1 Engine Cover, Removing and Installing”, page 77 .

4.2.5 Exhaust Gas Temperature Sensor 5 - G815- , Removing and Installing

Removing

- The securing components for the wires must correspond to the production series. Refer to Parts Catalog.
- When removing the wire do not cut it, in this case a fault diagnosis will no longer be possible.

cardiagn.com

Protected by copyright. Copying for private or commercial purposes, in part or in whole, is not permitted unless authorised by AUDI AG. AUDI AG does not guarantee or accept any liability with respect to the correctness of information in this document. Copyright by AUDI AG.

– Loosen the left underbody trim panel -3- on the inside.

– Disconnect the connector -2- and free it up.

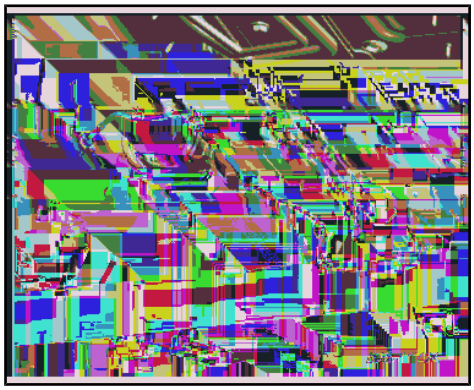

CAUTION

Risk of injury due to flying soot particles.
Irritation and injury to skin and eyes possible.
– Wear protective eyewear.
– Wear safety gloves.

– Remove the Exhaust Gas Temperature Sensor 5 - G815- -1-.

Installing

Install in reverse order of removal and note the following:

- Protect the exhaust gas temperature sensor against knocks and impacts. A dropped exhaust gas temperature sensor may not be used again.
- Coat the thread with hot bolt paste. Refer to the Parts Catalog.

Tightening Specifications

♦ Refer to ⇒ Servicing – 6-Cylinder TDI Common Rail Engine; Rep. Gr. 26 ; Exhaust Temperature Regulation; Overview - Exhaust Temperature Regulation .

4.3 Catalyst Temperature Sensor 1 - G20- , Removing and Installing

Removing

– Remove the air filter housing. Refer to ⇒ “3.2 Air Filter Housing, Removing and Installing”, page 229 .

– Remove the right engine cover. Refer to ⇒ “3.1 Engine Cover, Removing and Installing”, page 77 .

All additional procedures are described. Refer to ⇒ Servicing – 6-Cylinder TDI Common Rail Engine; Rep. Gr. 26 ; Exhaust Temperature Regulation; Catalyst Temperature Sensor 1 - G20- , Removing and Installing .

Protected by copyright. Copying for private or commercial purposes, in part or in whole, is not permitted unless authorised by AUDI AG. AUDI AG does not guarantee or accept any liability with respect to the correctness of information in this document. Copyright by AUDI AG.

cardiagn.com

Installing

Additional procedures:

– Install the engine cover. Refer to
⇒ “3.1 Engine Cover, Removing and Installing”, page 77 .

– Install the air filter housing. Refer to
⇒ “3.2 Air Filter Housing, Removing and Installing”, page 229 .

Protected by copyright. Copying for private or commercial purposes, in part or in whole, is not permitted unless authorised by AUDI AG. AUDI AG does not guarantee or accept any liability with respect to the correctness of information in this document. Copyright by AUDI AG.

cardiagn.com

5 Exhaust Gas Recirculation (EGR)

⇒ “5.1 Overview - Exhaust Gas Recirculation (EGR)”, page 286

⇒ “5.2 EGR Cooler, Removing and Installing”, page 289

⇒ “5.3 EGR Temperature Sensor G98 , Removing and Installing”, page 289

5.1 Overview - Exhaust Gas Recirculation (EGR)

⇒ “5.1.1 Overview - Exhaust Gas Recirculation (EGR), Versions without Auxiliary Radiator”, page 286

⇒ “5.1.2 Overview - Exhaust Gas Recirculation (EGR), Versions with Auxiliary Radiator”, page 288

5.1.1 Overview - Exhaust Gas Recirculation (EGR), Versions without Auxiliary Radiator

1 - EGR Pipe

- ❑ To Intake Manifold

2 - Bolt

- ❑ Tightening specifications. Refer to ⇒ Servicing – 6-Cylinder TDI Common Rail Engine; Rep. Gr. 26 ; EGR; Overview - EGR .

3 - Seal

- ❑ Installation instructions. Refer to ⇒ Servicing – 6-Cylinder TDI Common Rail Engine; Rep. Gr. 26 ; EGR; Overview - EGR .

4 - Bolt

- ❑ Tightening specifications. Refer to ⇒ Servicing – 6-Cylinder TDI Common Rail Engine; Rep. Gr. 26 ; EGR; Overview - EGR .

5 - Engine Coolant Temperature Sensor - G62-

- ❑ Removing and installing. Refer to ⇒ Servicing – 6-Cylinder TDI Common Rail Engine; Rep. Gr. 19 ; Coolant Pump/Coolant Regulation; Engine Coolant Temperature Sensor - G62- , Removing and Installing .

6 - O-rings

- ❑ Installation instructions. Refer to ⇒ Servicing – 6-Cylinder TDI Common Rail Engine; Rep. Gr. 26 ; EGR; Overview - EGR .

cardiagn.com

7 - EGR Cooler

- ❑ With EGR Motor - V338-
- ❑ Removing and installing. Refer to ⇒ Servicing – 6-Cylinder TDI Common Rail Engine; Rep. Gr. 26 ; EGR; EGR Cooler, Removing and Installing .

8 - Nut

- ❑ Tightening specifications. Refer to ⇒ Servicing – 6-Cylinder TDI Common Rail Engine; Rep. Gr. 26 ; EGR; Overview - EGR .

9 - Seal

- ❑ Installation instructions. Refer to ⇒ Servicing – 6-Cylinder TDI Common Rail Engine; Rep. Gr. 26 ; EGR; Overview - EGR .

10 - EGR Pipe

- ❑ From the Turbocharger

11 - EGR Temperature Sensor - G98-

- ❑ Removing and installing. Refer to ⇒ “5.3 EGR Temperature Sensor G98 , Removing and Installing”, page 289 .
- ❑ Tightening specifications. Refer to ⇒ Servicing – 6-Cylinder TDI Common Rail Engine; Rep. Gr. 26 ; EGR; Overview - EGR .

12 - Coolant Hose

13 - Bolt

- ❑ Tightening specifications. Refer to ⇒ Servicing – 6-Cylinder TDI Common Rail Engine; Rep. Gr. 26 ; EGR; Overview - EGR .

Protected by copyright. Copying for private or commercial purposes, in part or in whole, is not permitted unless authorised by AUDI AG. AUDI AG does not guarantee or accept any liability with respect to the correctness of information in this document. Copyright by AUDI AG.

14 - Coolant Hose

15 - Bolt

- ❑ Tightening specifications. Refer to ⇒ Servicing – 6-Cylinder TDI Common Rail Engine; Rep. Gr. 26 ; EGR; Overview - EGR .

16 - Vacuum Hose

17 - O-Ring

- ❑ Installation instructions. Refer to ⇒ Servicing – 6-Cylinder TDI Common Rail Engine; Rep. Gr. 26 ; EGR; Overview - EGR .

18 - Upper Coolant Pipe

- ❑ Removing and installing. Refer to ⇒ “3.2.1 Upper Coolant Pipe, Removing and Installing”, page 182 .

19 - Bolt

- ❑ Tightening specifications. Refer to ⇒ Servicing – 6-Cylinder TDI Common Rail Engine; Rep. Gr. 26 ; EGR; Overview - EGR .

cardiagn.com

5.1.2 Overview - Exhaust Gas Recirculation (EGR), Versions with Auxiliary Radiator

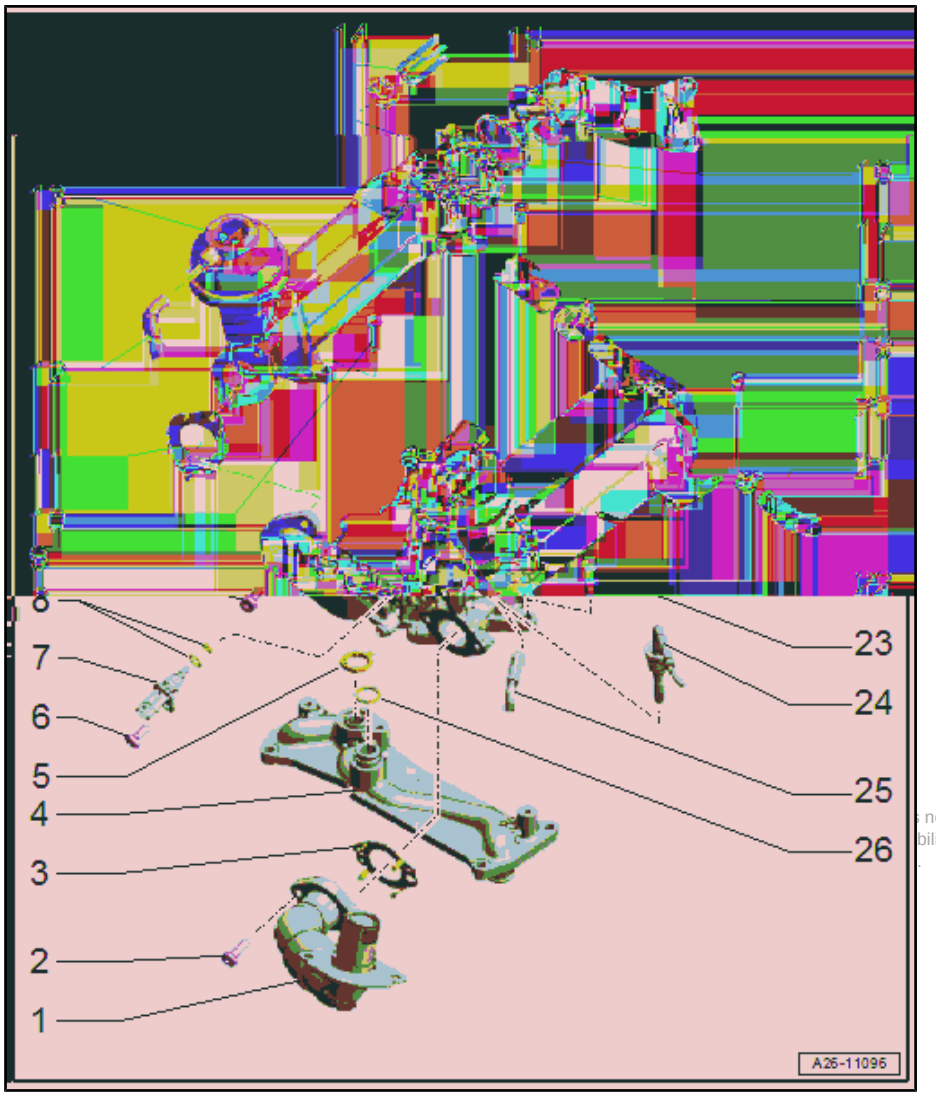

1 - EGR Pipe

- ❑ to Intake Manifold

2 - Bolt

- ❑ Tightening specifications. Refer to ⇒ Servicing – 6-Cylinder TDI Common Rail Engine; Rep. Gr. 26 ; EGR; Overview - EGR .

3 - Seal

- ❑ Installation instructions. Refer to ⇒ Servicing – 6-Cylinder TDI Common Rail Engine; Rep. Gr. 26 ; EGR; Overview - EGR .

4 - Upper Coolant Pipe

- ❑ Removing and installing. Refer to ⇒ “3.2.1 Upper Coolant Pipe, Removing and Installing”, page 182 .

5 - Seal

- ❑ Installation instructions. Refer to ⇒ Servicing – 6-Cylinder TDI Common Rail Engine; Rep. Gr. 26 ; EGR; Overview - EGR .

6 - Bolt

- ❑ Tightening specifications. Refer to ⇒ Servicing – 6-Cylinder TDI Common Rail Engine; Rep. Gr. 26 ; EGR; Overview - EGR .

7 - Engine Coolant Temperature Sensor - G62-

- ❑ Removing and installing. Refer to ⇒ “2.9 Engine Coolant Temperature Sensor G62 , Removing and Installing”, page 166 .

8 - O-rings

- ❑ Installation instructions. Refer to ⇒ Servicing – 6-Cylinder TDI Common Rail Engine; Rep. Gr. 26 ; EGR; Overview - EGR .

9 - Bolt

- ❑ Tightening specifications. Refer to ⇒ Servicing – 6-Cylinder TDI Common Rail Engine; Rep. Gr. 26 ; EGR; Overview - EGR .

10 - Bolt

- ❑ Tightening specifications. Refer to ⇒ Servicing – 6-Cylinder TDI Common Rail Engine; Rep. Gr. 26 ; EGR; Overview - EGR .

11 - Seal

- ❑ Replace after removing

cardiagn.com

12 - Vacuum Hose

13 - Auxiliary EGR Cooler

- ❑ From the Turbocharger
- ❑ Removing and installing. Refer to ⇒ Servicing – 6-Cylinder TDI Common Rail Engine; Rep. Gr. 26 ; EGR; EGR Cooler, Removing and Installing .

14 - Coolant Hose

15 - EGR Pipe

- ❑ From the Turbocharger

16 - Seal

- ❑ Installation instructions. Refer to ⇒ Servicing – 6-Cylinder TDI Common Rail Engine; Rep. Gr. 26 ; EGR; Overview - EGR .

17 - Screw-Type Clamp

- ❑ Tightening specifications. Refer to ⇒ Servicing – 6-Cylinder TDI Common Rail Engine; Rep. Gr. 26 ; EGR; Overview - EGR .

18 - Bolt

- ❑ Tightening specifications. Refer to ⇒ Servicing – 6-Cylinder TDI Common Rail Engine; Rep. Gr. 26 ; EGR; Overview - EGR .

19 - Coolant Hose

20 - Bolt

- ❑ Tightening specifications. Refer to ⇒ Servicing – 6-Cylinder TDI Common Rail Engine; Rep. Gr. 26 ; EGR; Overview - EGR .

21 - Coolant Hose

22 - EGR Cooler

- ❑ With EGR Motor - V338-
- ❑ Removing and installing. Refer to ⇒ Servicing – 6-Cylinder TDI Common Rail Engine; Rep. Gr. 26 ; EGR; EGR Cooler, Removing and Installing .

23 - Coolant Hose

24 - EGR Temperature Sensor - G98-

- ❑ Removing and installing. Refer to ⇒ "5.3 EGR Temperature Sensor G98 , Removing and Installing", page 289 .
- ❑ Tightening specifications. Refer to ⇒ Servicing – 6-Cylinder TDI Common Rail Engine; Rep. Gr. 26 ; EGR; Overview - EGR .

25 - Vacuum Hose

26 - O-Ring

- ❑ Installation instructions. Refer to ⇒ Servicing – 6-Cylinder TDI Common Rail Engine; Rep. Gr. 26 ; EGR; Overview - EGR .

Protected by copyright. Copying for private or commercial purposes, in part or in whole, is not permitted unless authorised by AUDI AG. AUDI AG does not guarantee or accept any liability with respect to the correctness of information in this document. Copyright by AUDI AG.

5.2 EGR Cooler, Removing and Installing

All procedures are described. Refer to ⇒ Servicing – 6-Cylinder TDI Common Rail Engine; Rep. Gr. 26 ; EGR; EGR Cooler, Removing and Installing .

5.3 EGR Temperature Sensor - G98- , Removing and Installing

Removing

– Remove the air filter housing. Refer to ⇒ "3.2 Air Filter Housing, Removing and Installing", page 229 .

cardiagn.com

All additional procedures are described. Refer to ⇒ Servicing – 6-Cylinder TDI Common Rail Engine; Rep. Gr. 26 ; EGR; EGR Temperature Sensor - G98- , Removing and Installing .

Installing

Additional procedures:

– Install the air filter housing. Refer to ⇒ “3.2 Air Filter Housing, Removing and Installing”, page 229 .

Protected by copyright. Copying for private or commercial purposes, in part or in whole, is not permitted unless authorised by AUDI AG. AUDI AG does not guarantee or accept any liability with respect to the correctness of information in this document. Copyright by AUDI AG.

cardiagn.com

6 Exhaust Manifold

⇒ “6.1 Overview - Exhaust Manifold”, page 291

⇒ “6.2 Exhaust Manifold, Removing and Installing”, page 292

6.1 Overview - Exhaust Manifold

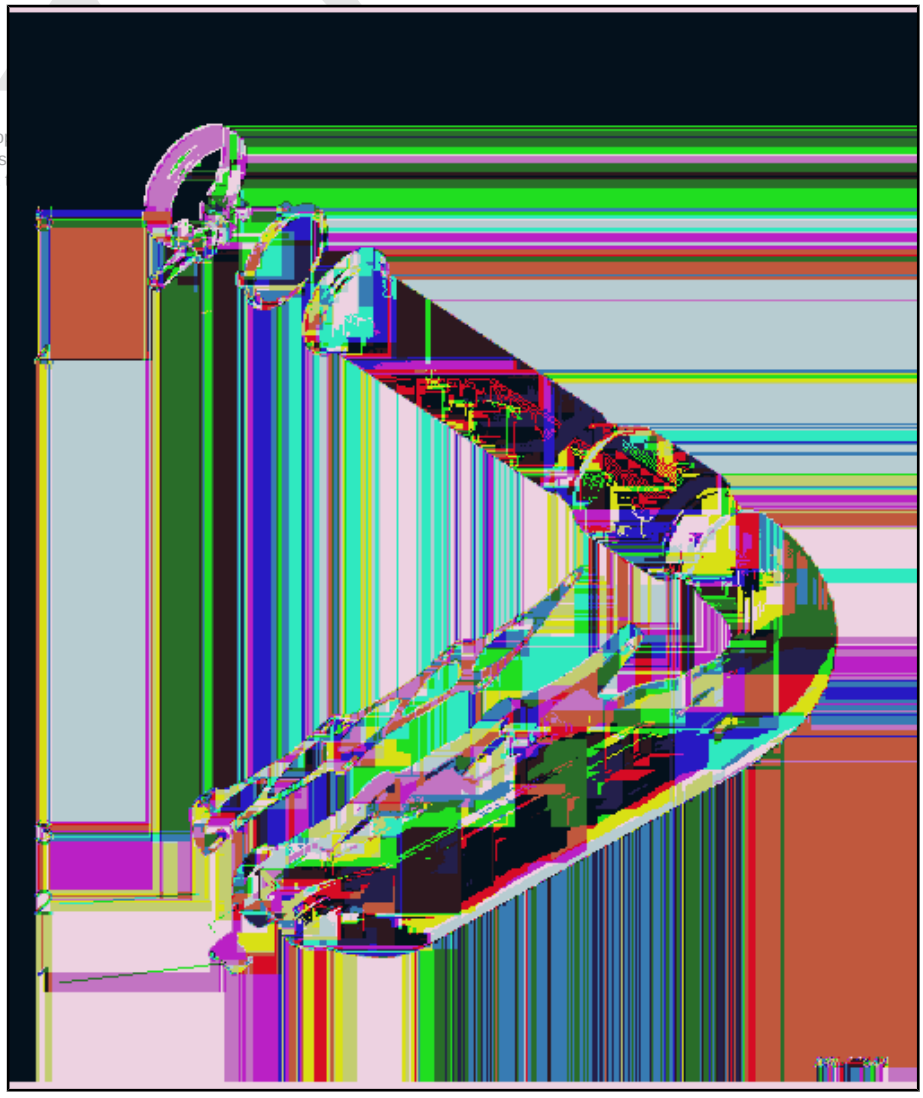

1 - Nut

- ❑ Tightening specifications and installation instructions. Refer to ⇒ Servicing – 6-Cylinder TDI Common Rail Engine; Rep. Gr. 26 ; Exhaust Manifold, Overview - Exhaust Manifold .
- ❑ 25 Nm

2 - Exhaust Manifold

- ❑ Shown for cylinder bank 2 (left)
- ❑ Removing and installing. Refer to ⇒ “6.2 Exhaust Manifold, Removing and Installing”, page 292 .

3 - Gasket

- ❑ Installation instructions. Refer to ⇒ Servicing – 6-Cylinder TDI Common Rail Engine; Rep. Gr. 26 ; Exhaust Manifold, Overview - Exhaust Manifold .

4 - Seal

- ❑ Installation instructions. Refer to ⇒ Servicing – 6-Cylinder TDI Common Rail Engine; Rep. Gr. 26 ; Exhaust Manifold, Overview - Exhaust Manifold .

5 - Clamp

- ❑ Tightening specifications. Refer to ⇒ Servicing – 6-Cylinder TDI Common Rail Engine; Rep. Gr. 21 ; Turbocharger; Overview - Turbocharger .

cardiagn.com

6.2 Exhaust Manifold, Removing and Installing

⇒ “6.2.1 Left Exhaust Manifold, Removing and Installing”, page 292

⇒ “6.2.2 Right Exhaust Manifold, Removing and Installing, Vehicle without High-Voltage System”, page 293

⇒ “6.2.3 Right Exhaust Manifold, Removing and Installing, Vehicle with High-Voltage System”, page 294

6.2.1 Left Exhaust Manifold, Removing and Installing

Special tools and workshop equipment required

- Engine Bung Set - VAS6122-
- Hose Clip Pliers - VAS6362-

Removing

Vehicle without High-Voltage System:

– Remove the ribbed belt from the A/C compressor belt pulley. Refer to ⇒ Servicing – 6-Cylinder TDI Common Rail Engine; Rep. Gr. 13 ; Cylinder Block Belt Pulley Side; Ribbed Belt, Removing and Installing .

– Remove the front exhaust pipe. Refer to ⇒ “1.2 Front Exhaust Pipe, Removing and Installing”, page 259 .

– Remove the lower left longitudinal member. Refer to ⇒ Body Exterior; Rep. Gr. 50 ; Lock Carrier; Overview - Lock Carrier .

Vehicle with High-Voltage System:

– Remove the emissions control module. Refer to ⇒ “2.2 Emissions Control Module, Removing and Installing”, page 268 .

– Remove the bolts -arrows- and remove the heat shield -1-.

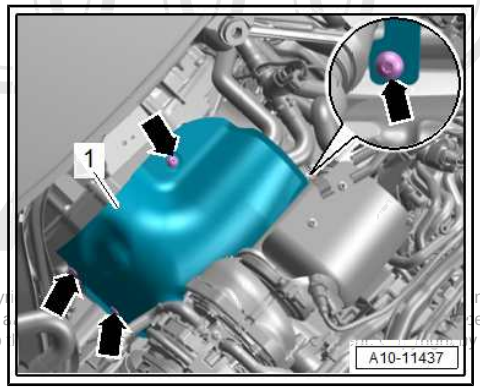

Continuation for All Vehicles:

– Remove the A/C compressor from the bracket and tie it up on the left side. Refer to ⇒ Heating, Ventilation and Air Conditioning; Rep. Gr. 87 ; A/C Compressor; A/C Compressor, Removing and Installing at Bracket .

– Remove the left subframe shield or for vehicle with high-voltage system the left subframe shield upper section. Refer to ⇒ Suspension, Wheels, Steering; Rep. Gr. 40 ; Subframe; Subframe Shield, Removing and Installing .

– Loosen the screw-type clamp -1- and slide onto the turbocharger entrance funnel.

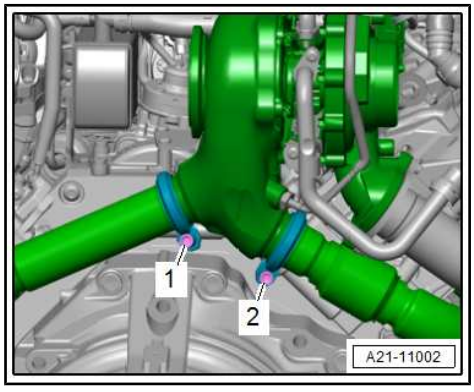

Protected by copyright. Copying for private or commercial purposes, in whole, is not permitted unless authorised by AUDI AG. AUDI AG does not guarantee or accept any liability with respect to the correctness of information in this document. Copyright by AUDI AG.
cardiagn.com

– Remove the nuts -arrows- and remove the exhaust manifold toward the rear.

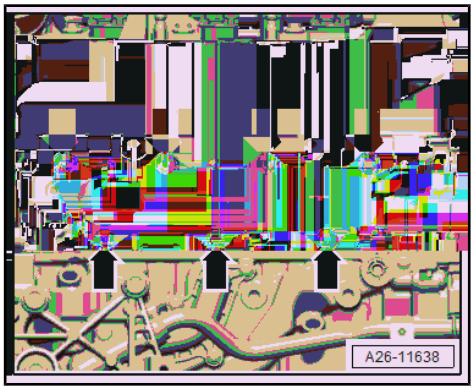

Installing

Install in reverse order of removal and note the following:

- Replace the seals, self locking nuts, and screw-type clamp after removing.

– Install the front exhaust pipe. Refer to ⇒ “1.2 Front Exhaust Pipe, Removing and Installing”, page 259 .

– Install the emissions control module. Refer to ⇒ “2.2 Emissions Control Module, Removing and Installing”, page 268 .

– Install the ribbed belt. Refer to ⇒ Servicing – 6-Cylinder TDI Common Rail Engine; Rep. Gr. 13 ; Cylinder Block Belt Pulley Side; Ribbed Belt, Removing and Installing .

Tightening Specifications

♦ Refer to ⇒ “5.1 Overview - Electric Drive Motor”, page 327

♦ Refer to ⇒ Servicing – 6-Cylinder TDI Common Rail Engine; Rep. Gr. 26 ; Exhaust Manifold, Overview - Exhaust Manifold .

Protected by copyright. Copying for private or commercial purposes, in part or in whole, is not permitted unless authorised by AUDI AG. AUDI AG does not guarantee or accept any liability with respect to the accuracy of the information in this document. Copyright by AUDI AG.

♦ Refer to ⇒ Suspension, Wheels, Steering; Rep. Gr. 40 ; Subframe; Overview - Subframe .

♦ Refer to ⇒ Body Exterior; Rep. Gr. 50 ; Lock Carrier; Overview - Lock Carrier .

♦ Refer to ⇒ Heating, Ventilation and Air Conditioning; Rep. Gr. 87 ; A/C Compressor; Overview - A/C Compressor Power Unit .

6.2.2 Right Exhaust Manifold, Removing and Installing, Vehicle without High-Voltage System

Removing

– Remove the front exhaust pipe. Refer to ⇒ “1.2 Front Exhaust Pipe, Removing and Installing”, page 259 .

– Remove the right subframe shield. Refer to ⇒ Suspension, Wheels, Steering; Rep. Gr. 40 ; Subframe; Subframe Shield, Removing and Installing .

– Remove the right engine support. Refer to ⇒ “1.7 Engine Support, Removing and Installing”, page 94 .

– Remove the bolts -1 and 3- and push the air duct pipe -2- slightly upward.

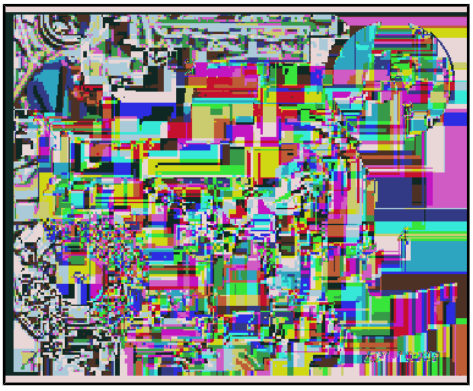

cardiagn.com

– Loosen the screw-type clamp -2- and slide onto the turbo-charger entrance funnel.

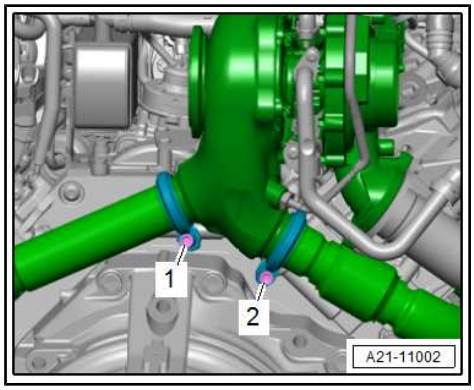

– Remove the nuts -arrows- and remove the exhaust manifold toward the rear.

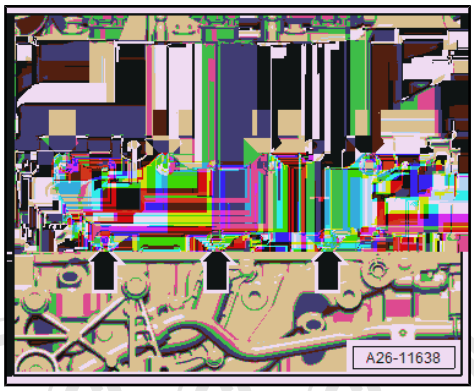

Installing

Install in reverse order of removal and note the following:

- Replace the O-ring, bolts and screw-type clamp after removal.

– Install the engine support. Refer to ⇒ “1.7 Engine Support, Removing and Installing”, page 94 .

– Install the front exhaust pipe. Refer to ⇒ “1.2 Front Exhaust Pipe, Removing and Installing”, page 259 .

Tightening Specifications

♦ Refer to ⇒ Servicing – 6-Cylinder TDI Common Rail Engine; Rep. Gr. 26 ; Exhaust Manifold, Overview - Exhaust Manifold .

♦ Refer to ⇒ “2.1 Overview - Charge Air System”, page 209

♦ Refer to ⇒ Suspension, Wheels, Steering; Rep. Gr. 40 ; Sub-frame; Overview - Subframe .

6.2.3 Right Exhaust Manifold, Removing and Installing, Vehicle with High-Voltage System

Protected by copyright. Copying for private or commercial purposes, in part or in whole, is not permitted unless authorised by AUDI AG. AUDI AG does not guarantee or accept any liability with respect to the correctness of information in this document. Copyright by AUDI AG.

Removing

– Remove the emissions control module. Refer to ⇒ “2.2 Emissions Control Module, Removing and Installing”, page 268 .

– Remove the bolts -arrows- and remove the heat shield -1-.

– Generator, removing and installing, Starter Generator - C29- , Vehicles with high-voltage system and 6-Cylinder TDI engine. Refer to ⇒ Electrical Equipment; Rep. Gr. 27 ; Generator; Generator, Removing and Installing .

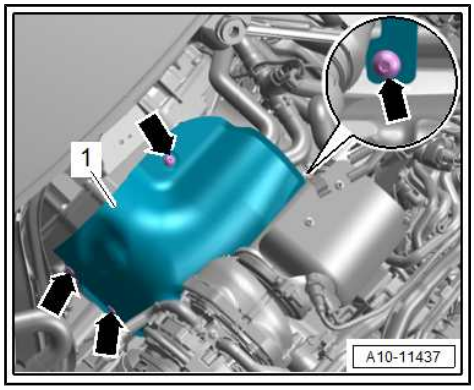

cardiagn.com

– Remove the bolts -1 and 3- and push the air duct pipe -2- slightly upward.

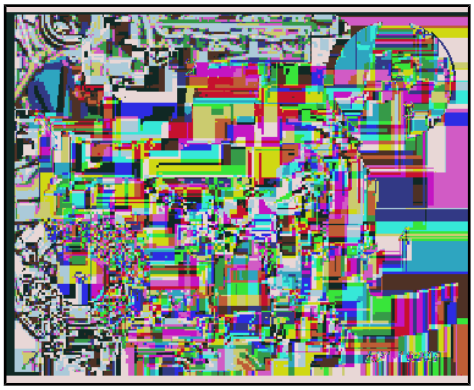

– Remove the bolts -arrows- and remove the heat shield -1-. (Shown with the starter generator removed).

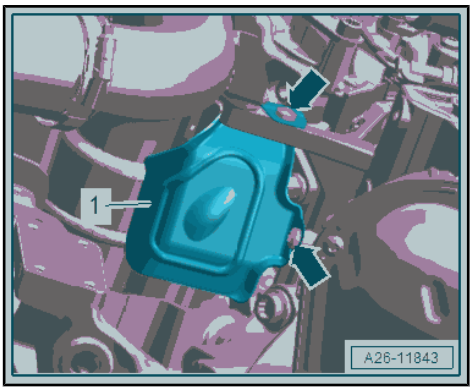

– Loosen the screw-type clamp -2- and slide onto the turbo-charger entrance funnel.

– Remove the right engine support. Refer to ⇒ “1.7 Engine Support, Removing and Installing”, page 94 .

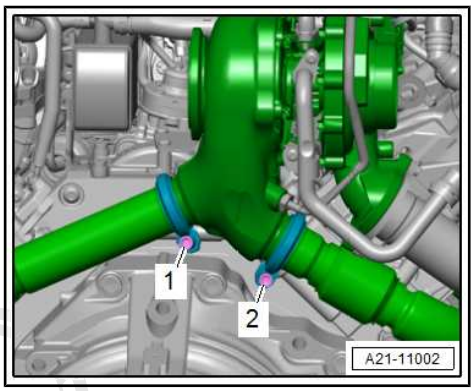

Protected by copyright. Copying for private or commercial purposes, in part or in whole, is not permitted unless authorised by AUDI AG. AUDI AG does not guarantee or accept any liability with respect to the correctness of information in this document. Copyright by AUDI AG.

cardiagn.com

– Remove the nuts -arrows- and remove the exhaust manifold toward the rear.

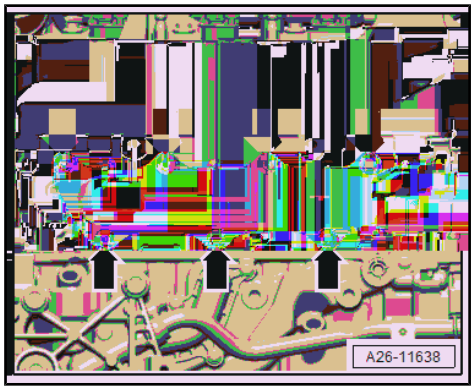

Installing

Install in reverse order of removal and note the following:

- Replace the O-ring, bolts and screw-type clamp after removal.

– Install the engine support. Refer to ⇒ “1.7 Engine Support, Removing and Installing”, page 94 .

– Install the emissions control module. Refer to ⇒ “2.2 Emissions Control Module, Removing and Installing”, page 268 .

Tightening Specifications

- Refer to ⇒ “5.1 Overview - Electric Drive Motor”, page 327
- Refer to ⇒ “1.1.2 Overview - Cylinder Block Belt Pulley Side, Vehicles with High-Voltage System”, page 89
- Refer to ⇒ Servicing – 6-Cylinder TDI Common Rail Engine; Rep. Gr. 26 ; Exhaust Manifold, Overview - Exhaust Manifold .
- Refer to ⇒ “2.1 Overview - Charge Air System”, page 209

Protected by copyright. Copying for private or commercial purposes, in part or in whole, is not permitted unless authorised by AUDI AG. AUDI AG does not guarantee or accept any liability with respect to the correctness of information in this document. Copyright by AUDI AG.

cardiagn.com

7 Special Tools

Special tools and workshop equipment required

- Engine Bung Set - VAS6122-

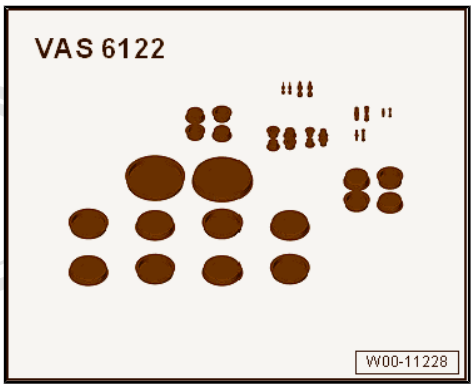

- Hose Clip Pliers - VAS6362-

- Vehicle Diagnostic Tester

Protected by copyright. Copying for private or commercial purposes, in pa
permitted unless authorised by AUDI AG. AUDI AG does not guarantee c
with respect to the correctness of information in this document. Copyri

cardiagn.com

28 – Ignition/Glow Plug System

1 Glow Plug System

⇒ “1.1 Overview - Glow Plug System”, page 298

⇒ “1.2 Glow Plug, Removing and Installing”, page 299

⇒ “1.3 Camshaft Position Sensor G40 , Removing and Installing”, page 300

⇒ “1.4 Engine Speed Sensor G28 , Removing and Installing”, page 300

1.1 Overview - Glow Plug System

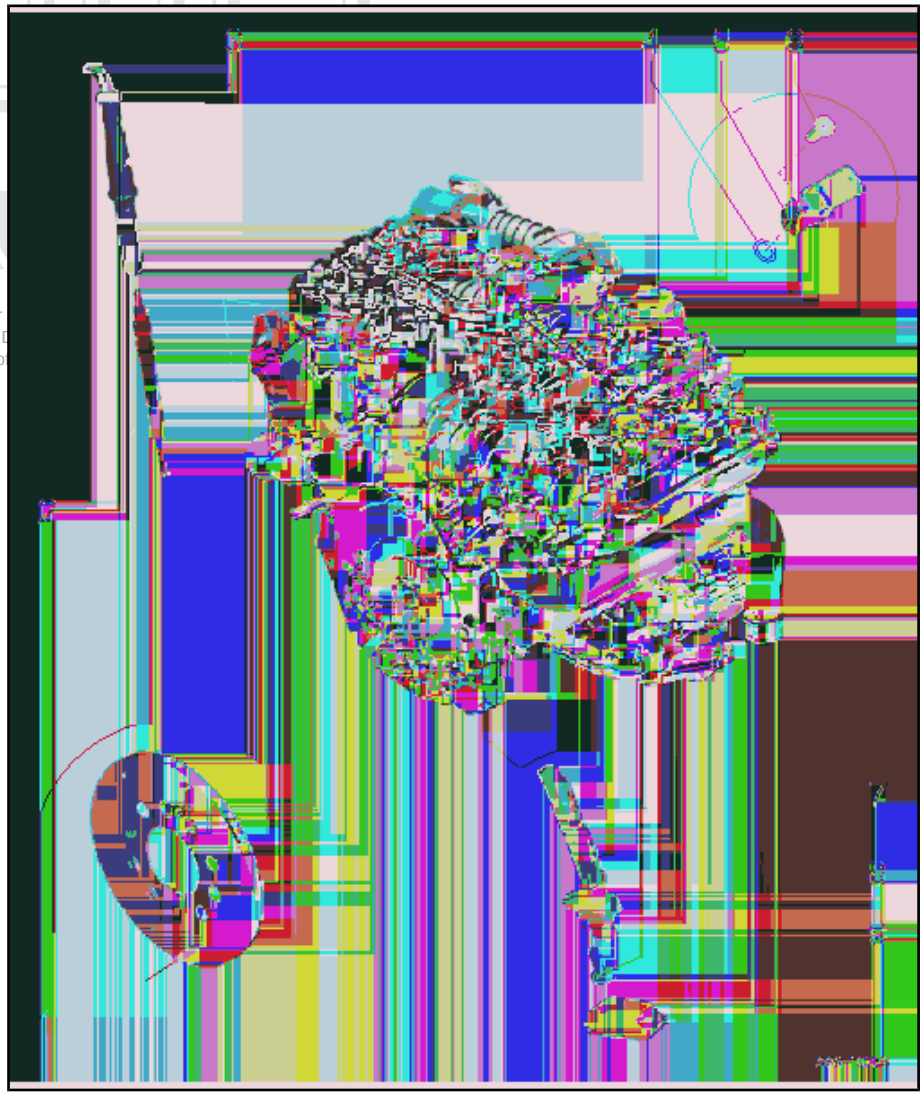

1 - Sensor Wheel

- For the Engine Speed Sensor - G28-
- Removing and installing. Refer to ⇒ Servicing – 6-Cylinder TDI Common Rail Engine; Rep. Gr. 13 ; Crankshaft; Sensor Wheel, Removing and Installing .

Protected by copyright. Copying for private use is permitted unless authorised by AUDI AG. AUDI AG does not guarantee or accept any liability with respect to the correctness of information in this document.

2 - Glow Plug

- Cylinder Bank 1 (Right):
  - Glow Plug 1 - Q10-
  - Glow Plug 2 - Q11-
  - Market-specific: Glow Plug 2 - Q11- with Cylinder 2 Combustion Chamber Pressure Sensor - G678-
  - Glow Plug 3 - Q12-
- Cylinder Bank 2 (Left):
  - Glow Plug 4 - Q13-
  - Glow Plug 5 - Q14-
  - Glow Plug 6 - Q15-
- Removing and installing. Refer to ⇒ “1.2 Glow Plug, Removing and Installing”, page 299 .
- Glow plug versions, tightening specifications. Refer to ⇒ Servicing – 6-Cylinder TDI Common Rail Engine; Rep. Gr. 28 ; Glow Plug System; Overview - Glow Plug System .

3 - Connector

4 - O-Ring

- Installation instructions. Refer to ⇒ Servicing – 6-Cylinder TDI Common Rail Engine; Rep. Gr. 28 ; Glow Plug System; Overview - Glow Plug System .

cardiagn.com

5 - Camshaft Position Sensor - G40-

- ❑ Removing and installing. Refer to ⇒ “1.3 Camshaft Position Sensor G40 , Removing and Installing”, page 300 .

6 - Bolt

- ❑ Tightening specifications. Refer to ⇒ Servicing – 6-Cylinder TDI Common Rail Engine; Rep. Gr. 28 ; Glow Plug System; Overview - Glow Plug System .

7 - Engine Speed Sensor - G28-

- ❑ Removing and installing. Refer to ⇒ Servicing – 6-Cylinder TDI Common Rail Engine; Rep. Gr. 28 ; Glow Plug System; Engine Speed Sensor - G28- , Removing and Installing .

8 - Bolt

- ❑ Tightening specifications. Refer to ⇒ Servicing – 6-Cylinder TDI Common Rail Engine; Rep. Gr. 28 ; Glow Plug System; Overview - Glow Plug System .

9 - Cover

1.2 Glow Plug, Removing and Installing

Removing

– Switch off the ignition.

– Remove the air filter upper section. Refer to ⇒ “3.2 Air Filter Housing, Removing and Installing”, page 229 .

Cylinders “1” and “2”:

– Remove the right engine cover. Refer to ⇒ “3.1 Engine Cover, Removing and Installing”, page 77 .

Cylinder “3”:

– Remove the Mass Airflow Sensor - G70- with the air duct pipe. Refer to ⇒ “6.2 Mass Airflow Sensor G70 , Removing and Installing”, page 241 .

Cylinders “4” and “5”:

– Remove the air filter housing. Refer to ⇒ “3.2 Air Filter Housing, Removing and Installing”, page 229 .

All additional procedures are described. Refer to ⇒ Servicing – 6-Cylinder TDI Common Rail Engine; Rep. Gr. 28 ; Glow Plug System; Glow Plugs, Removing and Installing .

Installing

Additional procedures:

– Install the Mass Airflow Sensor - G70- . Refer to ⇒ “6.2 Mass Airflow Sensor G70 , Removing and Installing”, page 241 .

– Install the engine cover. Refer to ⇒ “3.1 Engine Cover, Removing and Installing”, page 77 .

– Install the air filter housing. Refer to ⇒ “3.2 Air Filter Housing, Removing and Installing”, page 229 .

Protected by copyright. Copying for private or commercial purposes, in part or in whole, is not permitted unless authorised by AUDI AG. AUDI AG does not guarantee or accept any liability with respect to the correctness of information in this document. Copyright by AUDI AG.

cardiagn.com

1.3 Camshaft Position Sensor - G40- , Removing and Installing

Removing

– Remove the right engine cover. Refer to ⇒ “3.1 Engine Cover, Removing and Installing”, page 77 .

All additional procedures are described. Refer to ⇒ Servicing – 6-Cylinder TDI Common Rail Engine; Rep. Gr. 28 ; Glow Plug System; Camshaft Position Sensor - G40- , Removing and Installing .

Installing

Additional procedures:

– Install the engine cover. Refer to ⇒ “3.1 Engine Cover, Removing and Installing”, page 77 .

1.4 Engine Speed Sensor - G28- , Removing and Installing

All procedures are described. Refer to ⇒ Servicing – 6-Cylinder TDI Common Rail Engine; Rep. Gr. 28 ; Glow Plug System; Engine Speed Sensor - G28- , Removing and Installing .

Protected by copyright. Copying for private or commercial purposes, in part or in whole, is not permitted unless authorised by AUDI AG. AUDI AG does not guarantee or accept any liability with respect to the correctness of information in this document. Copyright by AUDI AG.

cardiagn.com

93 – Electric Drive

1 High-Voltage Components

⇒ “1.1 Component Location Overview - High-Voltage Components”, page 301

1.1 Component Location Overview - High-Voltage Components

Vehicle Front End

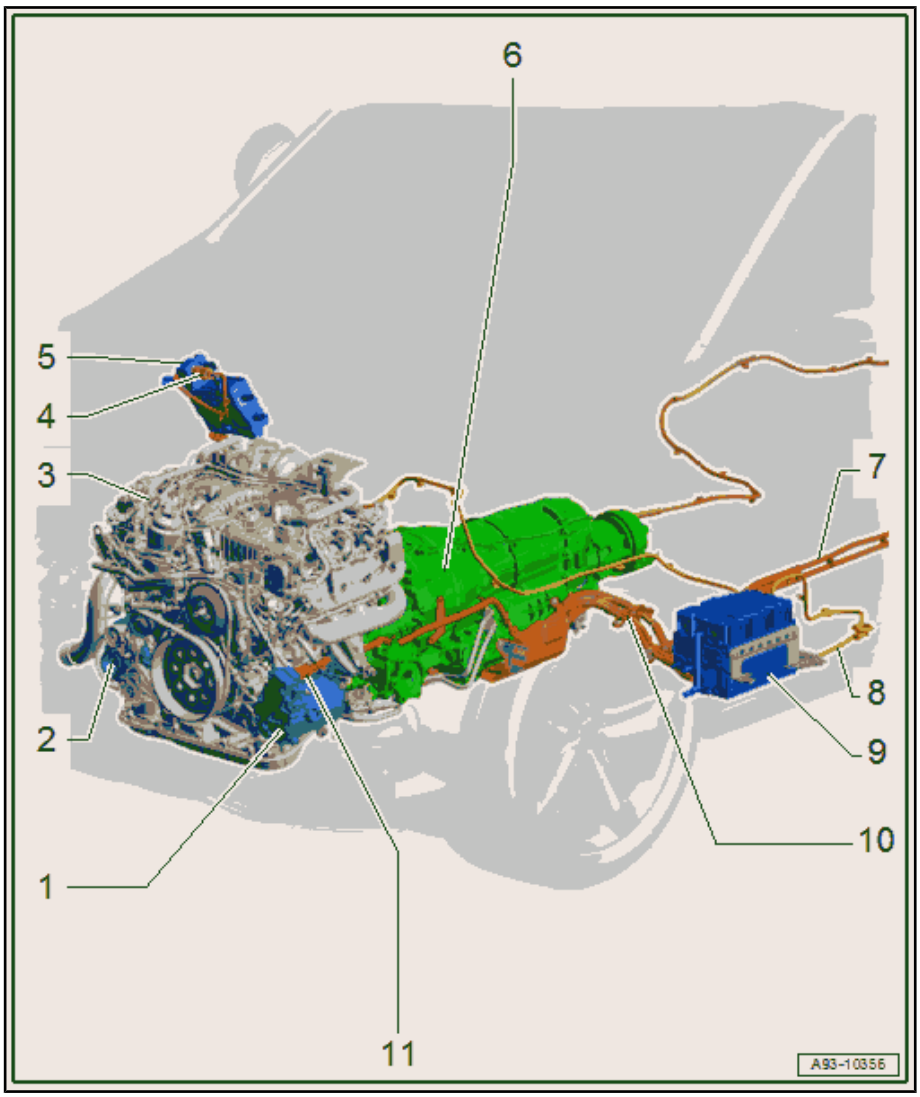

1 - Electrical A/C Compressor - V470-

- ❑ Overview. Refer to ⇒ Heating, Ventilation and Air Conditioning; Rep. Gr. 87 ; A/C Compressor; Overview - A/C Compressor Power Unit .

2 - Starter Generator - C29-

- ❑ Overview. Refer to ⇒ Electrical Equipment; Rep. Gr. 27 ; Generator; Overview - Generator .

3 - Internal Combustion Engine

4 - High-Voltage Cable

- ❑ From the High-Voltage Battery Charger 1 - AX4-
- ❑ Component location overview. Refer to ⇒ “6.1 Component Location Overview - High-Voltage Cables”, page 342 .

5 - High-Voltage Heater (PTC) - Z115-

- ❑ Component location: Plenum chamber on the right side
- ❑ Removing and installing. Refer to ⇒ Heating, Ventilation and Air Conditioning; Rep. Gr. 87 ; Coolant Circuit; High-Voltage Heater (PTC) - Z115- / High-Voltage Heater (PTC) Control Module - J848- , Removing and Installing .

6 - Three-Phase Current Drive - VX54-

- ❑ With Electro-Drive Drive Motor - V141-
- ❑ Overview. Refer to ⇒ “5.1 Overview - Electric Drive Motor”, page 327 .

7 - High-Voltage Cable Set

- ❑ From the Hybrid Battery Unit - AX1-
- ❑ Component location overview. Refer to ⇒ “6.1 Component Location Overview - High-Voltage Cables”, page 342 .

8 - Wire

- ❑ To the main fuse panel

cardiagn.com

- ❑ Component location overview. Refer to ⇒ Electrical Equipment; Rep. Gr. 97 ; Relay Panels, Fuse Panels, E-Boxes; Component Location Overview - Relay Panels, Fuse Panels, E-Boxes .

9 - Electric Drive Power and Control Electronics - JX1-

- ❑ Component location: in driver footwell underbody
- ❑ Overview. Refer to ⇒ “4.1 Component Location Overview - Electric Drive Power and Control Electronics”, page 320 .

10 - High-Voltage Cable Set

- ❑ To the Three-Phase Current Drive - VX54-
- ❑ Component location overview. Refer to ⇒ “6.1 Component Location Overview - High-Voltage Cables”, page 342 .

11 - High-Voltage Cable

- ❑ To the Electric Drive Power and Control Electronics - JX1-
- ❑ Component location overview. Refer to ⇒ “6.1 Component Location Overview - High-Voltage Cables”, page 342 .

Vehicle Rear End

1 - High-Voltage Cable Set

- ❑ From the Electric Drive Power and Control Electronics - JX1-
- ❑ Component location overview. Refer to ⇒ “6.1 Component Location Overview - High-Voltage Cables”, page 342 .

2 - High-Voltage Cable

- ❑ From the High-Voltage Heater (PTC) - Z115-
- ❑ Component location overview. Refer to ⇒ “6.1 Component Location Overview - High-Voltage Cables”, page 342 .

3 - Hybrid Battery Unit - AX1-

- ❑ Component location: On the luggage compartment underbody
- ❑ Overview. Refer to ⇒ “3.1 Overview - High-Voltage Battery”, page 308 .

4 - Battery Regulation Control Module - J840-

- ❑ Overview. Refer to ⇒ “3.1 Overview - High-Voltage Battery”, page 308 .

5 - Battery Charging Button Module - EX32-

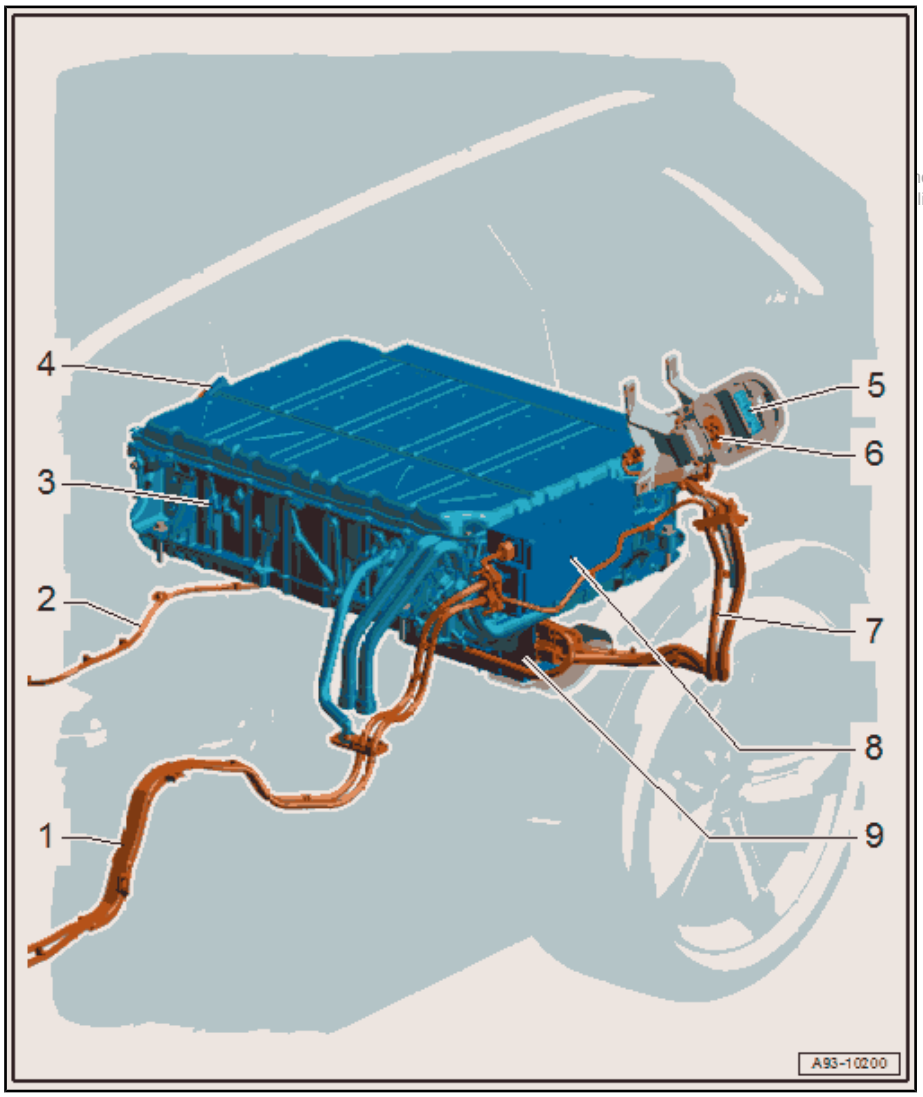

- ❑ Component location: In the charge door unit in the left side panel
- ❑ with Charging Socket LED Module 1 - L263- , Immediate Charging Button - E766- , Charging Profile Selection Button - E808-
- ❑ Overview. Refer to ⇒ “10.1 Overview - Charging Socket”, page 373 .

cardiagn.com

6 - High-Voltage Battery Charging Socket 1 - UX4-

- ❑ Component location: On the charge door unit in the left side panel
- ❑ Overview. Refer to ⇒ “10.1 Overview - Charging Socket”, page 373 .

7 - High-Voltage Cable Set

- ❑ From the High-Voltage Battery Charger 1 - AX4- to the High-Voltage Battery Switch Box - SX6-
- ❑ Component location overview. Refer to ⇒ “6.1 Component Location Overview - High-Voltage Cables”, page 342 .

8 - High-Voltage Battery Switch Box - SX6-

- ❑ Component location: Left on the Hybrid Battery Unit - AX1-
- ❑ Overview. Refer to ⇒ “3.1 Overview - High-Voltage Battery”, page 308 .

9 - High-Voltage Battery Charger 1 - AX4-

- ❑ With High-Voltage Battery Charger Control Module - J1050-
- ❑ Component location: On the luggage compartment underbody
- ❑ Overview. Refer to ⇒ “11.1 Overview - High-Voltage Battery Charger”, page 380 .

Protected by copyright. Copying for private or commercial purposes, in part or in whole, is not permitted unless authorised by AUDI AG. AUDI AG does not guarantee or accept any liability with respect to the correctness of information in this document. Copyright by AUDI AG.

cardiagn.com

2 Warning Label

⇒ “2.1 Warning Label, Checking”, page 304

2.1 Warning Label, Checking

A warning label is located on all high-voltage components.

For maintenance work pay attention that this warning label is not damaged or dirty and all high-voltage components are present.

Warning labels are on the following assembly groups:

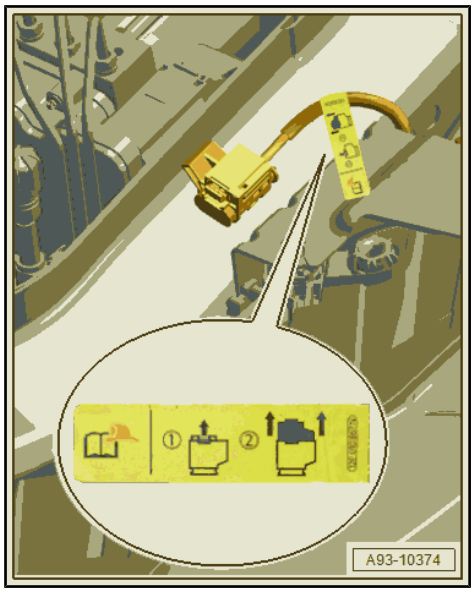

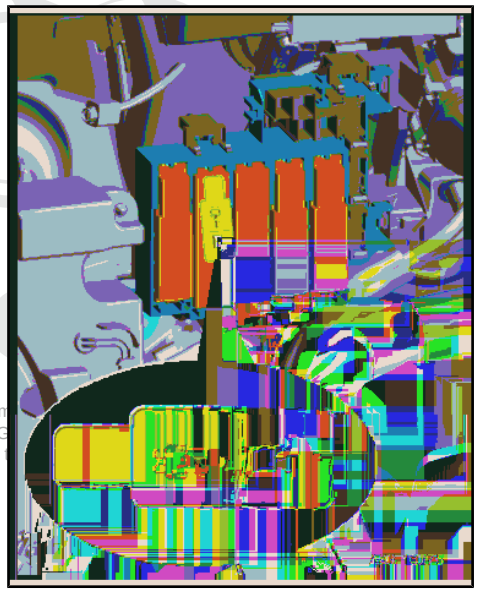

Protected by copyright. Copying for private or comm
permitted unless authorised by AUDI AG. AUDI AG
with respect to the correctness of information in

cardiagn.com

Protected by copyright. Copying fo
permitted unless authorised by Au
with respect to the correctness

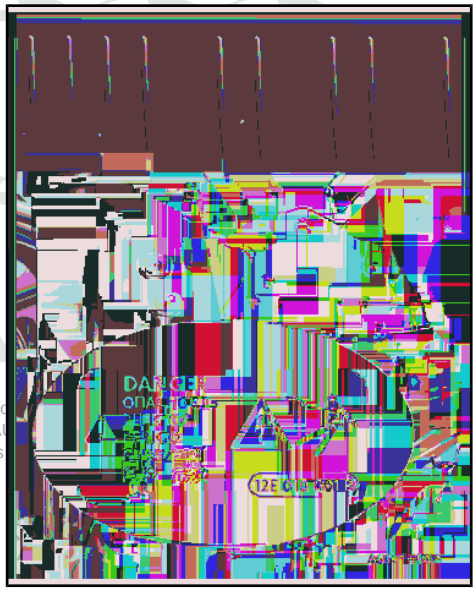

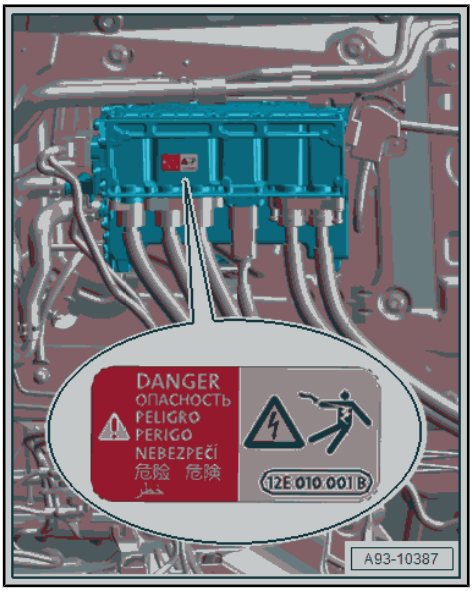

cardiagn.com

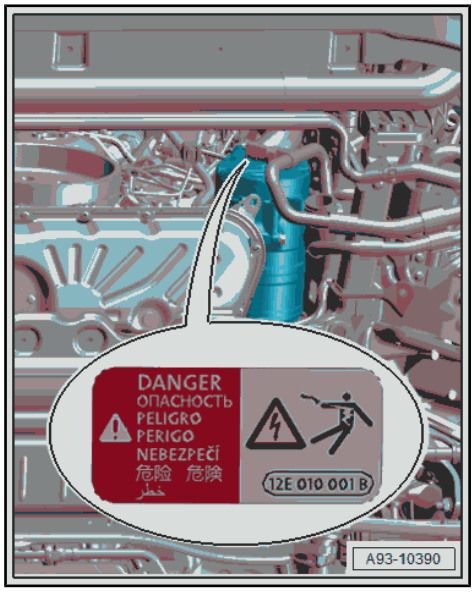

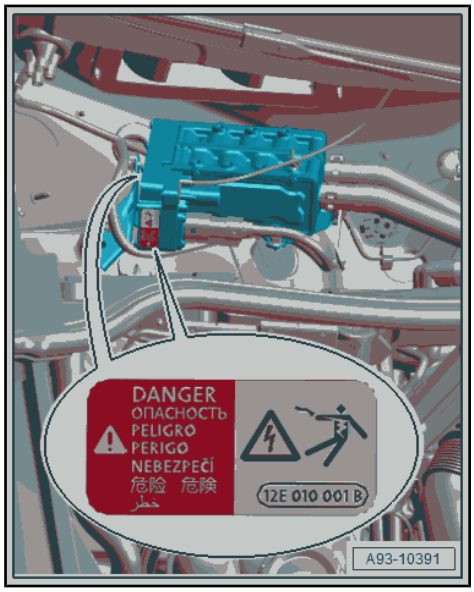

Protected by copyright. Copying for private or commercial purposes, in part or in whole, is not permitted unless authorised by AUDI AG. AUDI AG does not guarantee or accept any liability with respect to the correctness of information in this document. Copyright by AUDI AG.

cardiagn.com

- Rescue tag engine compartment under the left headlamp cover
- Rescue tag in the vehicle interior behind the service cover of the left luggage compartment side trim panel
- High-Voltage Battery Charger 1 - AX4-
- Electric Drive Power and Control Electronics - JX1- - Bottom
- Electric Drive Power and Control Electronics - JX1- - Side and Top
- Three-Phase Current Drive - VX54- - Side and Bottom
- Electrical A/C Compressor - V470-
- High-Voltage Heater (PTC) - Z115- - Side and Top
- Hybrid Battery Unit - AX1-

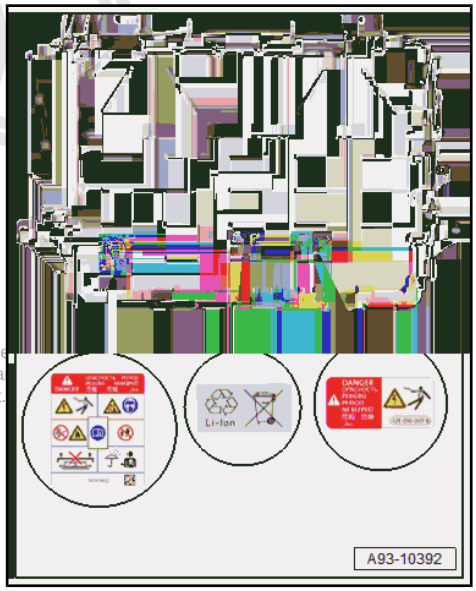

Protected by copyright. Copying for private or commercial purpose
Submitted unless authorised by AUDI AG. AUDI AG does not gua
with respect to the correctness of information in this document.

cardiagn.com

3 High-Voltage Battery Unit

⇒ “3.1 Overview - High-Voltage Battery”, page 308

⇒ “3.2 Hybrid Battery Unit AX1 , Visual Inspection”, page 311

⇒ “3.3 Hybrid Battery Unit AX1 , Removing and Installing”, page 312

⇒ “3.4 Battery Regulation Control Module J840 , Removing and Installing”, page 318

⇒ “3.5 High-Voltage Battery Switch Box SX6 , Removing and Installing”, page 318

3.1 Overview - High-Voltage Battery

Part 1

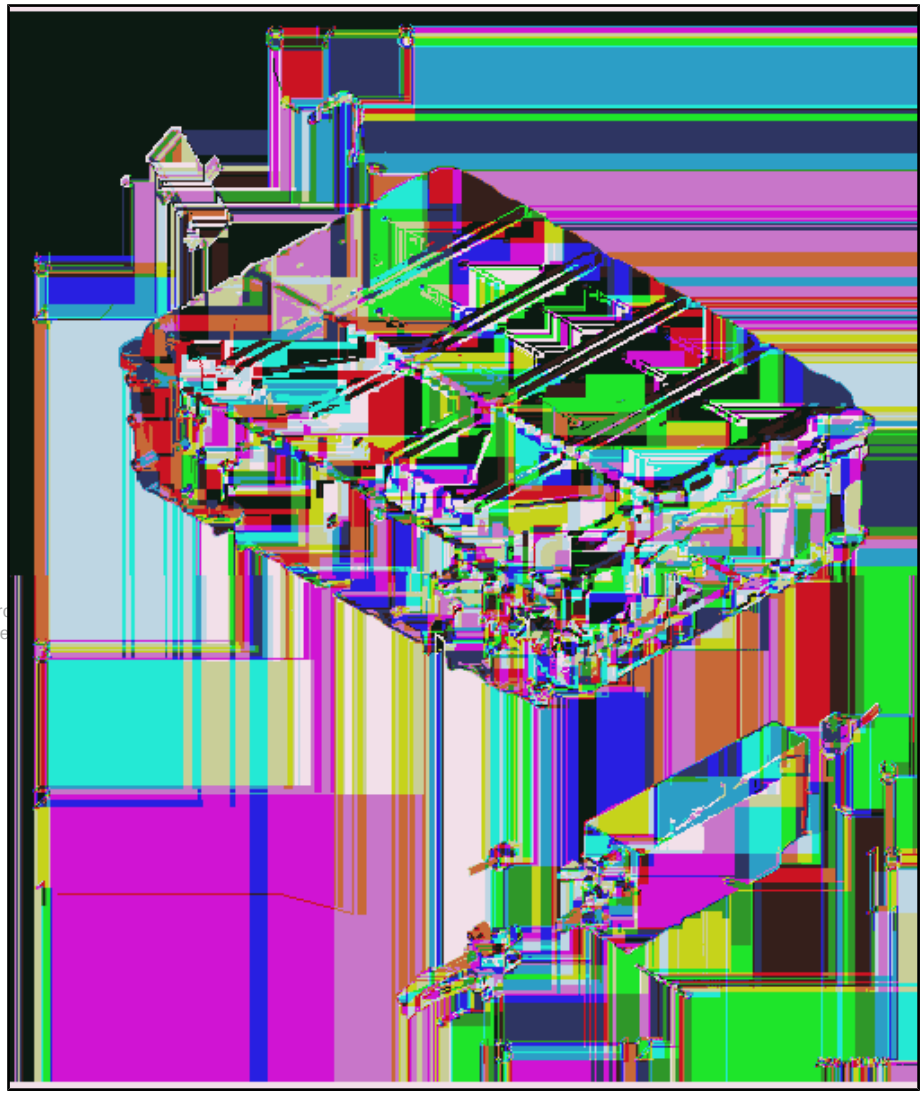

1 - High-Voltage Cable Set

- ❑ To the Electric Drive Power and Control Electronics - JX1-

2 - High-Voltage Cable

- ❑ From the High-Voltage Battery Charging Socket 1 - UX4-
- ❑ Loosen the two part connector lock. Refer to ⇒ Fig. ““Loosening the Two Part Connector Lock”“ , page 309 .

3 - Hybrid Battery Unit - AX1-

- ❑ Removing and installing. Refer to ⇒ “3.3 Hybrid Battery Unit AX1 , Removing and Installing”, page 312 .

4 - Battery Regulation Control Module - J840-

- ❑ Removing and installing. Refer to ⇒ “3.4 Battery Regulation Control Module J840 , Removing and Installing”, page 318 .

5 - Bolt

- ❑ 5.5 Nm

6 - Bolt

- ❑ 20 Nm

7 - Potential Equalization Cable

8 - Nut

- ❑ 9 Nm

9 - Connector

10 - Bolt

- ❑ M6x25

cardiagn.com

- ❑ Quantity: 3
- ❑ Tightening specification and sequence. Refer to ⇒ Fig. “ High-Voltage Battery Switch Box -SX6- - Tightening Specification and Sequence”“ , page 309 .

11 - High-Voltage Battery Switch Box - SX6-

- ❑ With integrated High-Voltage Battery Interrupt Igniter - N563- . The igniter cannot be replaced separately.
- ❑ Removing and installing. Refer to ⇒ “3.5 High-Voltage Battery Switch Box SX6 , Removing and Installing”, page 318 .

12 - Bolt

- ❑ M6x95
- ❑ Quantity: 2
- ❑ Tightening specification and sequence. Refer to ⇒ Fig. “ High-Voltage Battery Switch Box -SX6- - Tightening Specification and Sequence”“ , page 309 .

13 - Bolt

- ❑ 7 Nm

Protected by copyright. Copying for private or commercial purposes, in part or in whole, is not permitted unless authorised by AUDI AG. AUDI AG does not guarantee or accept any liability with respect to the correctness of information in this document. Copyright by AUDI AG.

Loosening the Two Part Connector Lock

– Remove the connector lock -3- in the direction of -arrow A-.

– Press the release -4- in the direction of -arrow B- and remove the connector -1- approximately 5 mm up to the next release level.

– Press the release -5- in the direction of -arrow D- and remove the connector from the connector mount -2- in the direction of -arrow C-.

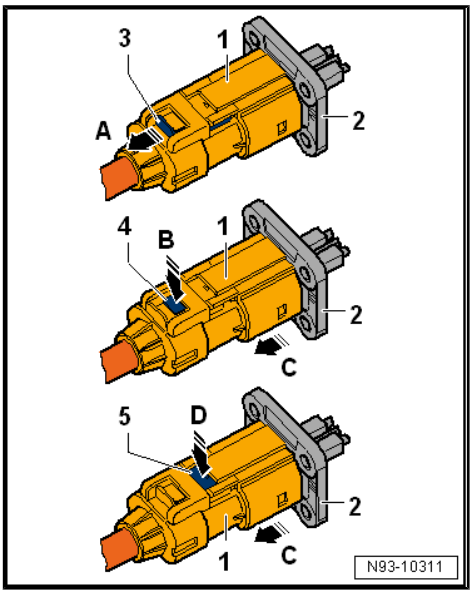

High-Voltage Battery Switch Box - SX6- - Tightening Specification and Sequence

– Tighten the bolts in steps in the sequence shown, at the same time pay attention to the bolt lengths.

Step	Bolts	Tightening Specification
1.	-1 and 3- (M6x25)	Install by hand and tighten approximately halfway
2.	-2- (M6x95)	Install by hand and tighten approximately halfway
3.	-4- (M6x25)	Install by hand and tighten to 10 Nm.
4.	-5- (M6x95)	Install by hand and tighten to 12 Nm.
5.	-1 and 3-	Tighten to 10 Nm
5.	-2-	Tighten to 12 Nm.

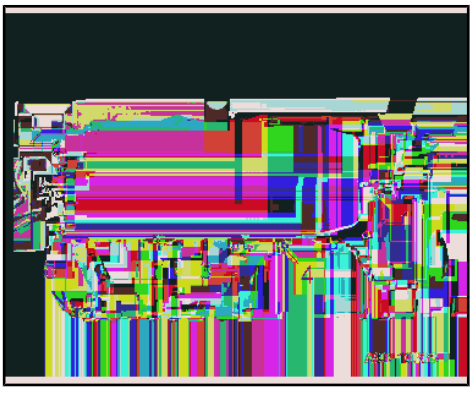

Part 2

cardiagn.com

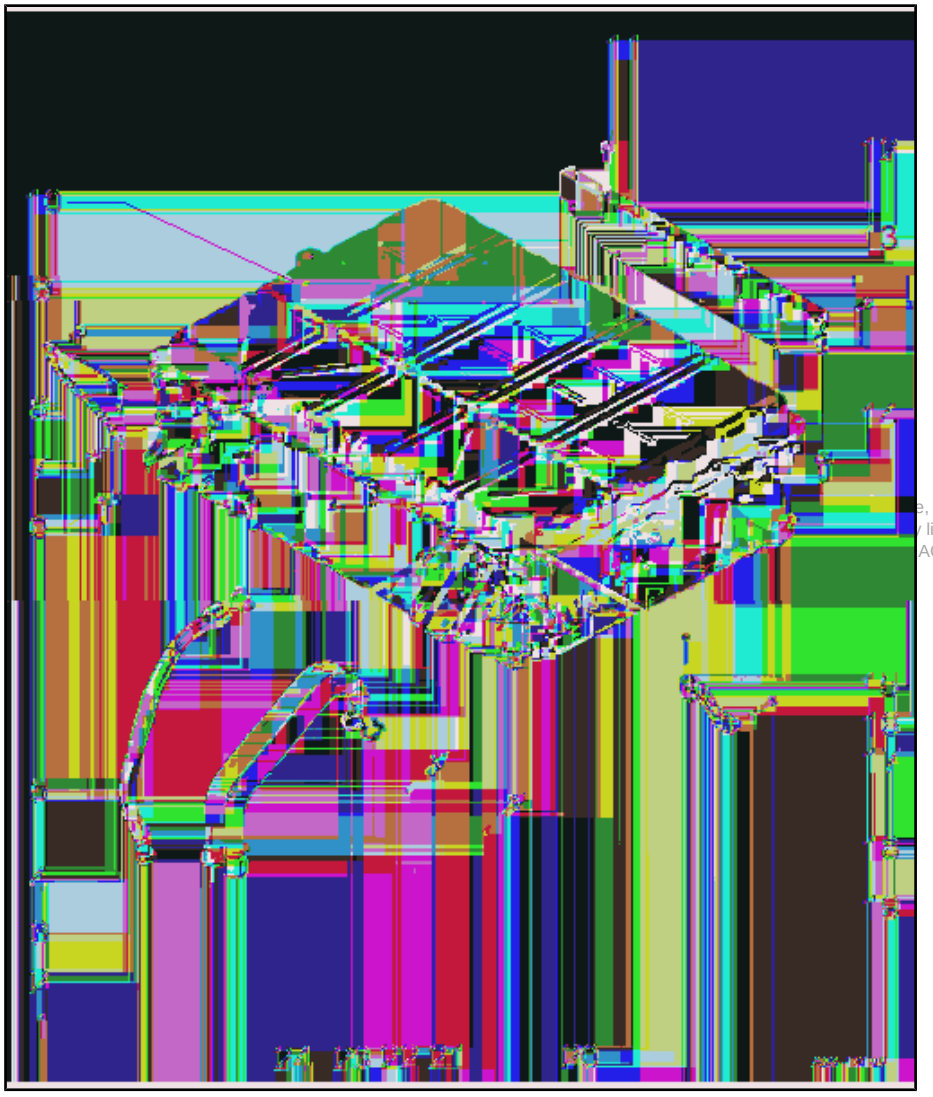

1 - O-Ring
- ❑ Replace after removing

2 - O-Ring
- ❑ Replace after removing

3 - Coolant Hose
- ❑ Supply

4 - O-Ring
- ❑ Replace after removing

5 - Pressure Balance Hose

6 - Bolt
- ❑ 70 Nm +90°
- ❑ Replace after removing
- ❑ Quantity: 2

7 - Bolt
- ❑ 27 Nm

8 - Retainer
- ❑ For the Hybrid Battery Unit - AX1-

9 - Bolt
- ❑ 24 Nm

10 - Hybrid Battery Unit - AX1-
- ❑ Removing and installing. Refer to ⇒ “3.3 Hybrid Battery Unit AX1 , Removing and Installing”, page 312 .

11 - Bolt
- ❑ 10 Nm
- ❑ Serves at the same time for securing the cover of the hybrid battery unit

12 - Impact Protector

13 - Bolt
- ❑ 12 Nm

14 - Bolt
- ❑ 70 Nm +90°
- ❑ Replace after removing
- ❑ Quantity: 2

15 - Bolt
- ❑ 27 Nm

16 - Bolt
- ❑ 27 Nm

17 - Retainer
- ❑ For the Hybrid Battery Unit - AX1-

18 - O-Ring
- ❑ Replace after removing

e, is not
liability
AG.

cardiagn.com

19 - High-Voltage Battery Coolant Temperature Sensor 2 - G899-

- ❑ Removing and installing. Refer to ⇒ “2.12.7 High-Voltage Battery Coolant Temperature Sensors 1 and 2 G898 / G899 , Removing and Installing”, page 173 .

20 - Bolt

- ❑ 6.5 Nm

21 - O-Ring

- ❑ Replace after removing

22 - High-Voltage Battery Coolant Temperature Sensor 1 - G898-

- ❑ Removing and installing. Refer to ⇒ “2.12.7 High-Voltage Battery Coolant Temperature Sensors 1 and 2 G898 / G899 , Removing and Installing”, page 173 .

23 - Bolt

- ❑ 6.5 Nm

24 - Coolant Hose

- ❑ Return

3.2 Hybrid Battery Unit - AX1- , Visual Inspection

Special tools and workshop equipment required

- ♦ Vehicle Diagnostic Tester

Procedure

- In case of complaints or DTC memory entries inform the high-voltage expert.

Protected by copyright. Copying for private or commercial purposes, in part or in whole, is not permitted unless authorised by AUDI AG. AUDI AG does not guarantee or accept any liability with respect to the correctness of information in this document. Copyright by AUDI AG.

⚠ CAUTION

Health risk due to toxic dust and fluids.

– Never work on high-voltage batteries that have a short circuit.

⚠ CAUTION

There is a risk of burns due to a hot high-voltage battery.

It is possible to burn hands.

– Wear safety gloves.

Inspect the Hybrid Battery Unit - AX1- for:

- ♦ Cracks in the housing or the cover of the hybrid battery unit.
- ♦ Deformation of the housing or the hybrid battery unit cover.
- ♦ Changes in color due to temperature effects and housing discoloration.
- ♦ Leaking electrolyte.
- ♦ Damage to the high-voltage contacts.
- ♦ Presence of legible information and warning labels.
- ♦ Attached potential equalization cable.
- ♦ Corrosion damage.

– After the visual inspection perform a diagnosis of the Hybrid Battery Unit - AX1- . Refer to Vehicle Diagnostic Tester .

cardiagn.com

3.3 Hybrid Battery Unit - AX1- , Removing and Installing

Special tools and workshop equipment required

- Hose Clamps - Up To 25mm - 3094-
- Shop Crane - VAS6100-
- Engine Bung Set - VAS6122-
- Hose Clip Pliers - VAS6340-
- Release Tool - VAS531001-
- 8 mm Shackle - VAS691007- , not illustrated (quantity 3)
- 10 mm Shackle - VAS691009- , not illustrated (quantity 2)
- Retaining Strap - T40155- (quantity 2)

Removing

DANGER

Extremely dangerous due to high-voltage.

Electrocution can cause death or very serious personal injury.

– Have the high-voltage system de-energized by a qualified person.

– De-energize the high-voltage system. Refer to ⇒ “7 High-Voltage System, De-Energizing”, page 364 .

– Remove the luggage compartment floor. Refer to ⇒ Body Interior; Rep. Gr. 70 ; Luggage Compartment Trim Panels; Luggage Compartment Floor, Removing and Installing .

– Remove the luggage compartment floor. Refer to ⇒ Body Interior; Rep. Gr. 70 ; Luggage Compartment Trim Panels; Luggage Compartment Floor Trim Panel, Removing and Installing .

– Perform a visual inspection of the high-voltage battery. Refer to ⇒ “3.2 Hybrid Battery Unit AX1 , Visual Inspection”, page 311 .

Note

If the high-voltage battery is being replaced or the high-voltage battery coolant was drained, the coolant must be completely drained from the high-voltage system coolant circuit and refilled. Refer to ⇒ “1.3.3 Coolant, Draining and Filling, Vehicle with High-Voltage System, High-Voltage System Coolant Circuit”, page 146 .

Protected by copyright. Copying for private or commercial purposes, in part or in whole, is not permitted unless authorised by AUDI AG. AUDI AG does not guarantee or accept any liability with respect to the correctness of information in this document. Copyright by AUDI AG.

cardiagn.com

– Clamp off the coolant hoses -1 and 2- to the high-voltage battery under the underbody using the -3094- .

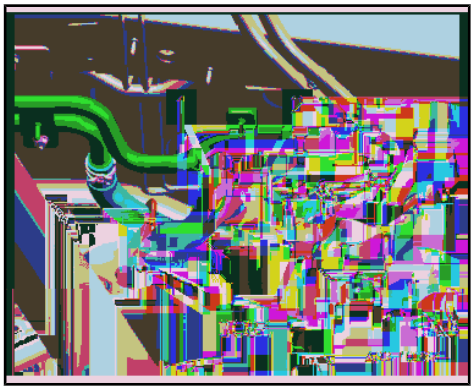

– Clamp off the coolant hoses -1 and 2- to the high-voltage battery in the vehicle interior using the -3094- .

– Catch escaping coolant with a cloth.

CAUTION

The cooling system is under pressure when the engine is warm. Risk of scalding due to hot steam and hot coolant.

Scalding the skin and other parts of the body is possible.

- **Wear safety gloves.**
- **Wear protective eyewear.**
- **Reduce the pressure by covering the coolant expansion tank cap with a cloth and carefully opening it.**

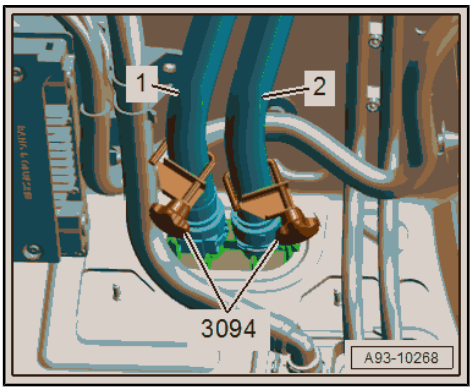

– Remove the coolant hoses -1 and 2- to the high-voltage battery from the body guide under the underbody. The -3094- remains on the coolant hoses.

– To prevent escaping coolant from flowing on the carpet, the cover the area under the coolant hoses with absorbent paper towels.

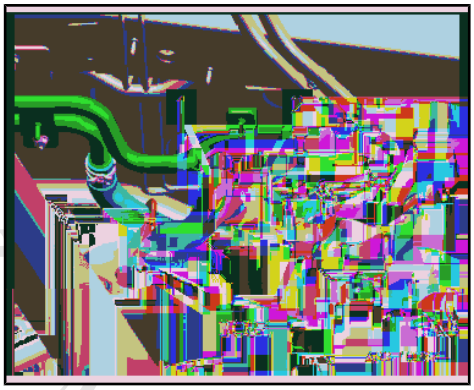

– Release and remove the coolant hoses -1 and 2- in the vehicle interior. The -3094- remains on the coolant hoses.

– Always seal off any coolant hoses with plugs that are thoroughly cleaned from the -VAS6122- .

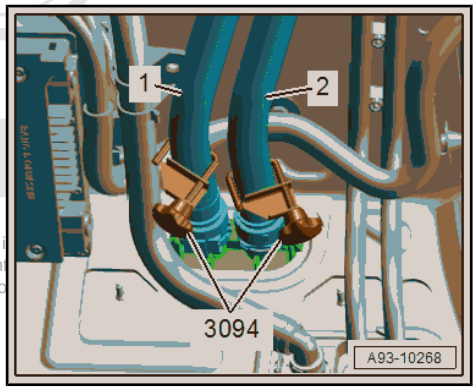

Protected by copyright. Copying for private or commercial purposes, i
permitted unless authorised by AUDI AG. AUDI AG does not guarant
with respect to the correctness of information in this document. Co

cardiagn.com

– Remove the pressure balance hose -arrow- to do so push the catches on both sides.

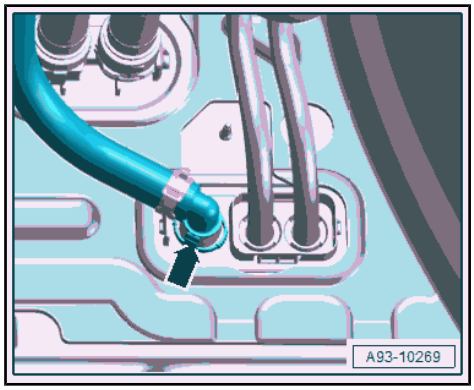

– Loosen the bolt -1-, remove the bolt -3- and fold the retainer -2- to the left.

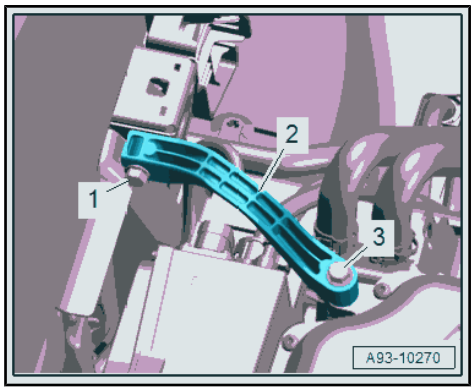

– Release and disconnect the connector -arrow- in the wiring harness to the high-voltage battery.

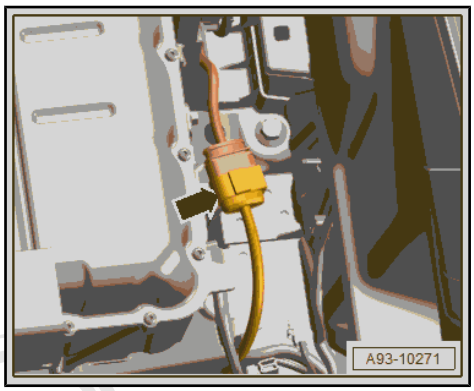

– Release and remove the high-voltage cable -2-.
– Remove the bolts -arrows- and remove the high-voltage cable -1-.

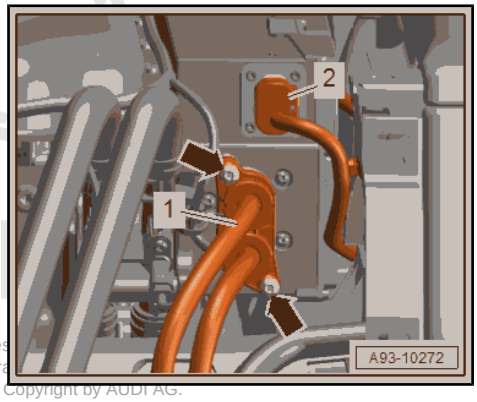

Protected by copyright. Copying for private or commercial purposes
permitted unless authorised by AUDI AG. AUDI AG does not guara
with respect to the correctness of information in this document. Copyright by AUDI AG.

cardiagn.com

– To do so remove the connector lock -3- in the direction of -arrow A-.
– Press the release -4- in the direction of -arrow B- and remove the connector -1- approximately 5 mm up to the next release level.
– Press the release -5- in the direction of -arrow D- and remove the connector from the connector mount -2- in direction of -arrow C-.

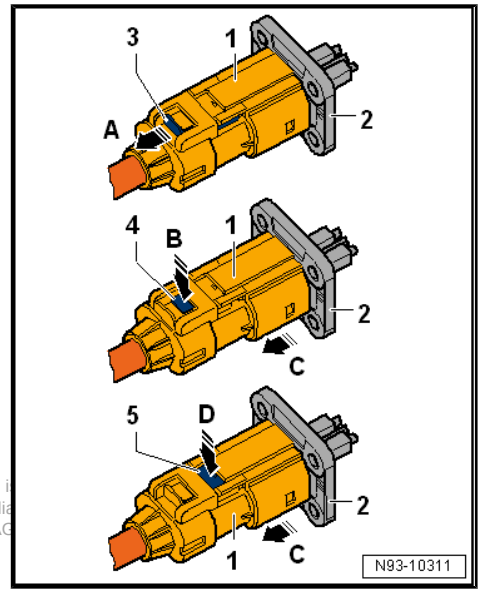

Protected by copyright. Copying for private or commercial purposes, in part or in whole, i
permitted unless authorised by AUDI AG. AUDI AG does not guarantee or accept any lia
with respect to the correctness of information in this document. Copyright by AUDI AG

– To protect from pinching free up the high-voltage cable -arrows- and place toward the rear.

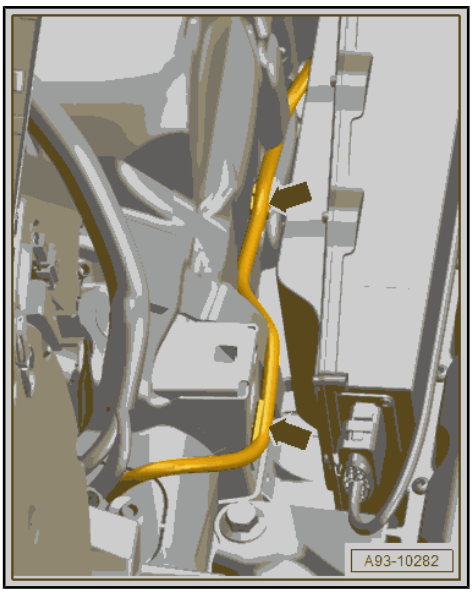

– Remove the bolt -arrow- for the potential equalization cable from the hybrid battery unit.

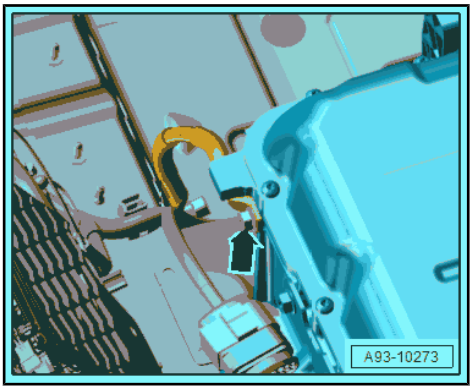

cardiagn.com

– Remove the bolts -arrows-.

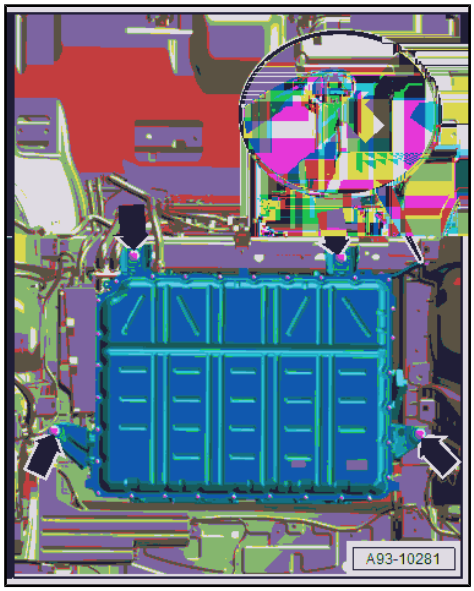

– Secure a -T40155- on left rear bracket of the high-voltage battery with a 8 mm -VAS691007- .

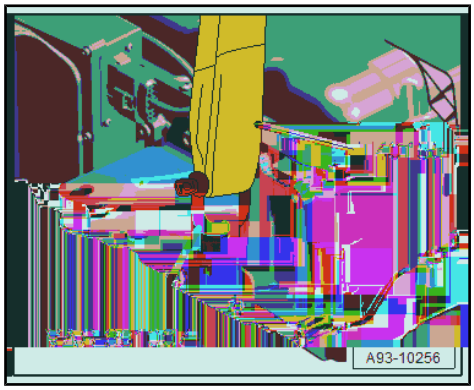

– Secure the other end of a -T40155- on the rear right on the bracket of the high-voltage battery using a 10 mm -VAS691009- .

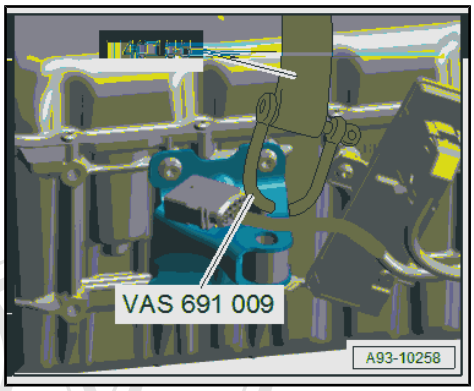

– Secure a second -T40155- on left front bracket of the high-voltage battery with an additional 8 mm -VAS691007- .

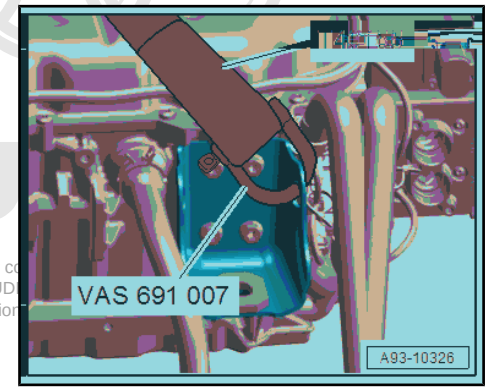

Protected by copyright. Copying for private or co
permitted unless authorised by AUDI AG. AUDI
with respect to the correctness of information

cardiagn.com

– Secure the other end of the second -T40155- on the front right on the bracket of the high-voltage battery using an additional 8 mm -VAS691007- .

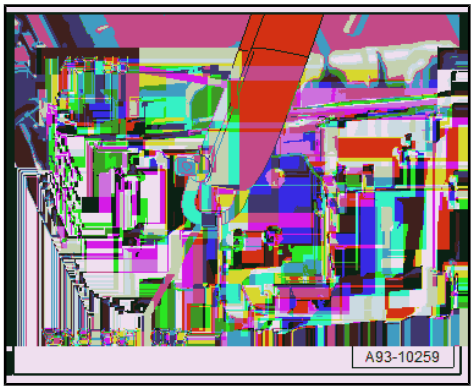

CAUTION

Risk of accident due to the faulty mounting of the high-voltage battery.

Pinching hands is possible.

– Never engage the securing straps directly in the workshop crane.

– Using the 10 mm -VAS691009- combine both -T40155- over the high-voltage battery.

– Engage the 10 mm -VAS691009- in the -VAS6100- .

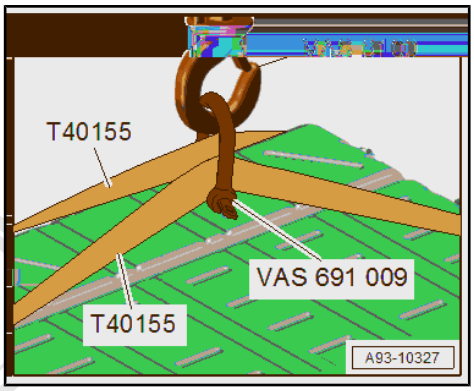

– Pry out the high-voltage battery -1- from the vehicle using the -VAS6100- .

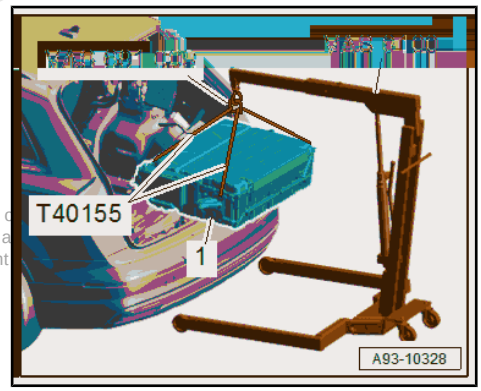

Installing

Install in reverse order of removal and note the following:

- Replace the bolts that were tightened with an additional turn.
- Used coolant cannot be used again.
- After installing the high-voltage battery the potential equalization measurement must be performed. Refer to Vehicle Diagnostic Tester and the vehicle electrical system must be reconnected.

WARNING

Extremely dangerous due to high-voltage.

Severe bodily injury or death by electrocution is possible.

– Have a qualified person put the high-voltage system back into service.

– Re-energize the high-voltage system. Refer to ⇒ “8 High-Voltage System, Re-Energizing”, page 366 .

– Fill eith coolant and bleed the coolant system for the high-voltage system coolant circuit. Refer to ⇒ “1.3.4 Coolant, Filling and Bleeding Coolant System, Vehicle with High-Voltage System, High-Voltage System Coolant Circuit”, page 148 .

Tightening Specifications

- Refer to ⇒ “3.1 Overview - High-Voltage Battery”, page 308
- Refer to ⇒ Body Interior; Rep. Gr. 70 ; Luggage Compartment Trim Panels; Overview - Luggage Compartment Floor .

Protected by copyright. Copying for private or commercial purposes, in part or in whole, is not permitted unless authorised by AUDI AG. AUDI AG does not guarantee or accept any liability with respect to the correctness of information in this document. Copyright by AUDI AG.
cardiagn.com

3.4 Battery Regulation Control Module - J840- , Removing and Installing

Removing

- If replacing the control module, select the “Replace control module” function for the corresponding control module. Refer to Vehicle Diagnostic Tester .

– Remove the luggage compartment floor. Refer to ⇒ Body Interior; Rep. Gr. 70 ; Luggage Compartment Trim Panels; Luggage Compartment Floor, Removing and Installing .

– To improve the accessibility, disconnect the connector -arrow-.

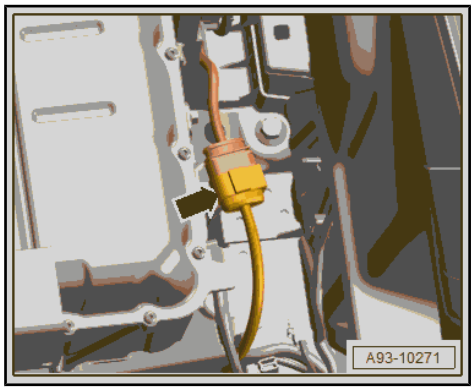

– Release and disconnect the connector -1-.

– Remove the bolts -arrows- and the Battery Regulation Control Module - J840- .

Installing

Install in reverse order of removal.

Tightening Specifications

♦ Refer to ⇒ “3.1 Overview - High-Voltage Battery”, page 308

♦ Refer to ⇒ Body Interior; Rep. Gr. 70 ; Luggage Compartment Trim Panels; Overview - Luggage Compartment Floor .

3.5 High-Voltage Battery Switch Box - SX6- , Removing and Installing

Special tools and workshop equipment required

♦ Insulation mat from the High Voltage Tool Set - VAS6762-

Protected by Copyright. Copying for private or commercial purposes, in part or in whole, is not permitted unless authorised by AUDI AG. AUDI AG does not guarantee or accept any liability with respect to the correctness of information in this document. Copyright by AUDI AG.

Removing

- If replacing the control module, select the “Replace control module” function for the corresponding control module. Refer to Vehicle Diagnostic Tester .

– Remove the high-voltage battery (refer to ⇒ “3.3 Hybrid Battery Unit AX1 , Removing and Installing”, page 312) and place on the insulation mat from the -VAS6762- on the workbench.

cardiagn.com

– Release and disconnect the connector -arrow-.

– Remove the bolts -5 to 1- for this a second technician must hold the High-Voltage Battery Switch Box - SX6- .

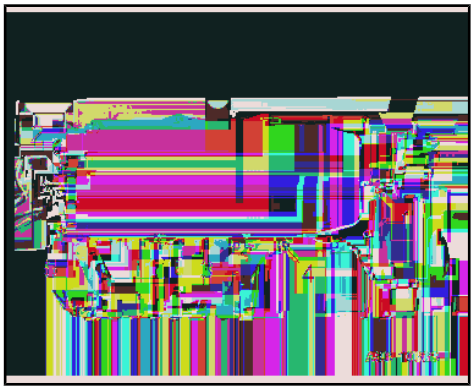

DANGER

Extremely dangerous due to high-voltage.

Electrocution can cause death or very serious personal injury.

- **When replacing install the new switch box immediately after removal of the old switch box.**
- **When removing the shift box never leave the high-voltage battery unsupervised.**
- **When removing the shift box never insert tools in the opening on the high-voltage battery.**

– Carefully remove the high-voltage battery switch box from the high-voltage battery.

Installing

Install in reverse order of removal and note the following:

– Install the high-voltage battery. Refer to ⇒ “3.3 Hybrid Battery Unit AX1 , Removing and Installing”, page 312 .

Tightening Specifications

♦ Refer to ⇒ “3.1 Overview - High-Voltage Battery”, page 308

cardiagn.com

Protected by copyright. Copying for private or commercial purposes, in part or in whole, is not permitted unless authorised by AUDI AG. AUDI AG does not guarantee or accept any liability with respect to the correctness of information in this document. Copyright by AUDI AG.

4 Electric Drive Power and Control Electronics

⇒ “4.1 Component Location Overview - Electric Drive Power and Control Electronics”, page 320

⇒ “4.2 Electric Drive Power and Control Electronics, Removing and Installing”, page 323

⇒ “4.3 Electric Drive Power and Control Electronics JX1 , Removing and Installing”, page 325

4.1 Component Location Overview - Electric Drive Power and Control Electronics

⇒ “4.1.1 Component Location Overview - Electric Drive Power and Control Electronics”, page 320

⇒ “4.1.2 Component Location Overview - Electric Drive Power and Control Electronics and Mount”, page 322

4.1.1 Component Location Overview - Electric Drive Power and Control Electronics

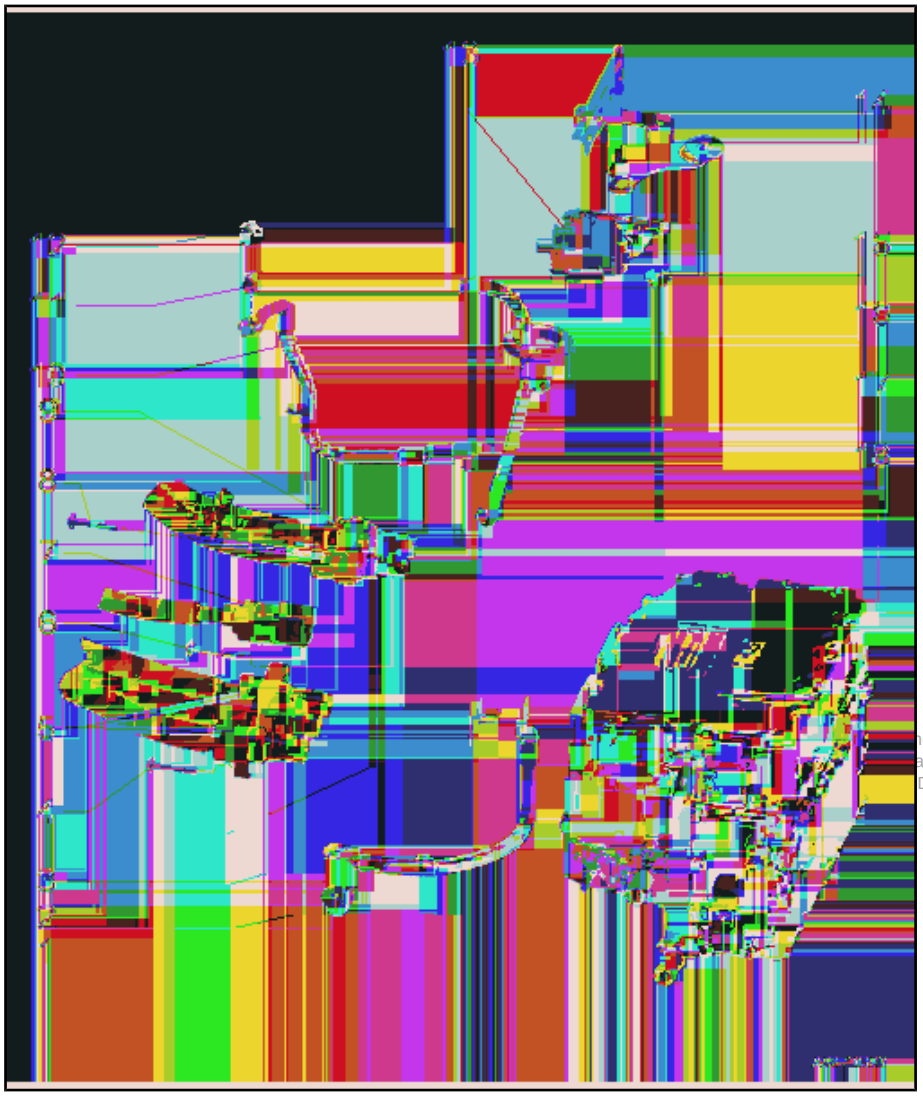

1 - Nut

- ❑ Tightening specification -item 2- ⇒ Item 2 (page 368) .

2 - Potential Equalization Cable

- ❑ Component location overview. Refer to ⇒ “9.2 Component Location Overview - Potential Equalization Cables”, page 368 .

3 - Bolt

- ❑ Tightening specification -item 4- ⇒ Item 4 (page 368) .

4 - Bolt

- ❑ Quantity: 2
- ❑ Tightening specification -item 5- ⇒ Item 5 (page 345) .

5 - Drive Motor High-Voltage Wiring Harness - PX2-

- ❑ To the Electro-Drive Drive Motor - V141-
- ❑ Component location overview. Refer to ⇒ “6.1 Component Location Overview - High-Voltage Cables”, page 342 .

6 - Bolt

- ❑ Quantity: 2
- ❑ Tightening specification -item 1- ⇒ Item 1 (page 344) .

cardiagn.com
hole, is not
any liability
DI AG.

7 - Electrical A/C Compressor High-Voltage Cable - P3-

- ❑ To the Electrical A/C Compressor - V470-
- ❑ Component location overview. Refer to ⇒ “6.1 Component Location Overview - High-Voltage Cables”, page 342 .

8 - Bolt

- ❑ Quantity: 2
- ❑ Tightening specification -item 12- ⇒ Item 12 (page 345) .

9 - High-Voltage Wiring Harness for High-Voltage Battery - PX1-

- ❑ From the Hybrid Battery Unit - AX1-
- ❑ Component location overview. Refer to ⇒ “6.1 Component Location Overview - High-Voltage Cables”, page 342 .

10 - B+ Wire

- ❑ Supply line for the power electronics

11 - Nut

- ❑ 17 Nm

12 - Cap

13 - Housing

- ❑ For the B+ wire

14 - Left Bracket

- ❑ For power electronics
- ❑ Component location overview. Refer to ⇒ “4.1.2 Component Location Overview - Electric Drive Power and Control Electronics and Mount”, page 322 .

15 - Nut

- ❑ 1.5 Nm
- ❑ Quantity: 2

16 - Grommet

17 - B+ Wire

- ❑ 7.5 Nm
- ❑ To the Wire Junction - TV1-

18 - Electric Drive Power and Control Electronics - JX1-

- ❑ Removing and installing. Refer to ⇒ “4.2 Electric Drive Power and Control Electronics, Removing and Installing”, page 323 .

Protected by copyright. Copying for private or commercial purposes, in part or in whole, is not permitted unless authorized by Audi AG. Audi AG does not guarantee or accept any liability with respect to the correctness and completeness of this document and its contents.
cardiagn.com

4.1.2 Component Location Overview - Electric Drive Power and Control Electronics and Mount

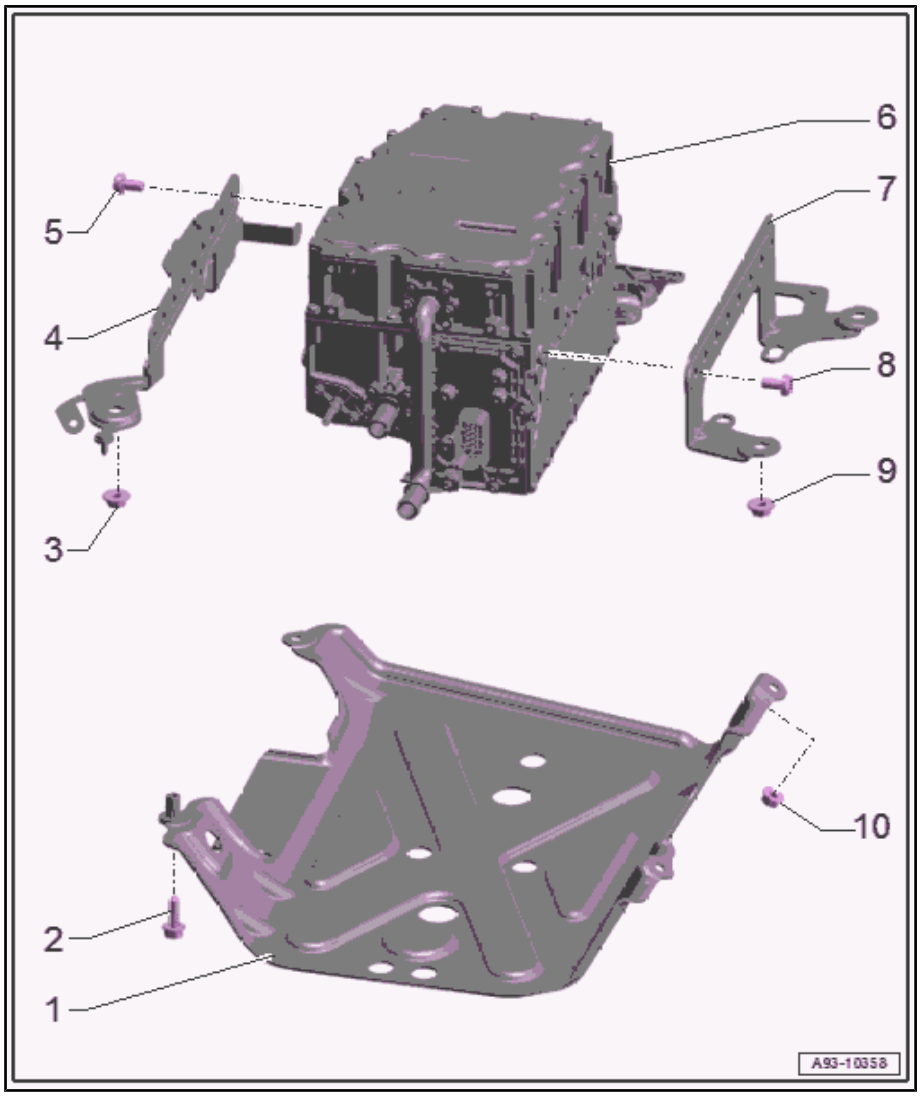

1 - Impact Guard

- For the electric drive power and control electronics
- Removing and installing. Refer to ⇒ Body Exterior; Rep. Gr. 66 ; Underbody Trim Panel; Impact Guard, Removing and Installing .

2 - Bolt

- Quantity: 2
- Tightening specification. Refer to ⇒ Body Exterior; Rep. Gr. 66 ; Underbody Trim Panel; Overview - Underbody Trim Panels .

3 - Nut

- 20 Nm
- Quantity: 2

4 - Right Bracket

- For power electronics
- Removing and installing. Refer to ⇒ “4.3 Electric Drive Power and Control Electronics JX1 , Removing and Installing”, page 325 .

5 - Bolt

- 15 Nm
- Quantity: 3

6 - Electric Drive Power and Control Electronics - JX1-

- Removing and installing. Refer to ⇒ “4.2 Electric Drive Power and Control Electronics, Removing and Installing”, page 323 .

7 - Left Bracket

- For power electronics
- Removing and installing. Refer to ⇒ “4.3 Electric Drive Power and Control Electronics JX1 , Removing and Installing”, page 325 .

8 - Bolt

- 15 Nm
- Quantity: 2

9 - Nut

- 20 Nm
- Quantity: 2

10 - Nut

- Quantity: 2

cardiagn.com

❑ Tightening specification. Refer to ⇒ Body Exterior; Rep. Gr. 66 ; Underbody Trim Panel; Overview - Underbody Trim Panels .

4.2 Electric Drive Power and Control Electronics, Removing and Installing

Special tools and workshop equipment required

- ♦ Hose Clamps - Up To 25mm - 3094-
- ♦ Hose Clip Pliers - VAS6362-
- ♦ Vehicle Diagnostic Tester

Removing

- If replacing the control module, select the “Replace control module” function for the corresponding control module. Refer to Vehicle Diagnostic Tester .

⚠ DANGER

Extremely dangerous due to high-voltage.

Electrocution can cause death or very serious personal injury.

– Have the high-voltage system de-energized by a qualified person.

– De-energize the high-voltage system. Refer to ⇒ “7 High-Voltage System, De-Energizing”, page 364 .

– With the ignition switched off, disconnect the ground cable from the battery. Refer to ⇒ Electrical Equipment; Rep. Gr. 27 ; Battery; Battery, Disconnecting and Connecting .

– Remove the left impact guard. Refer to ⇒ Body Exterior; Rep. Gr. 66 ; Underbody Trim Panel; Impact Guard, Removing and Installing .

– Clamp off the coolant hoses on the Electric Drive Power and Control Electronics - JX1- with the -3094- and remove them by loosening the hose clamps -4-.

– Remove the pressure balance hose -5- to do so push the catches on both sides.

– Disconnect the connector -3-.

– Remove the nut -2-.

– Move the potential equalization cable -1- to the side.

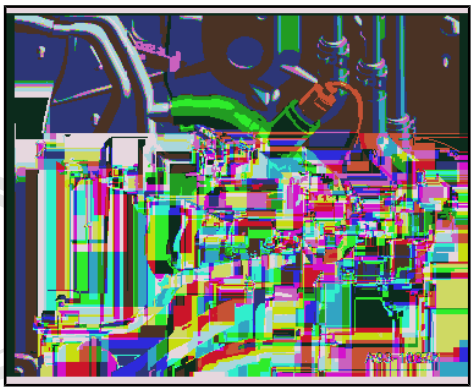

cardiagn.com

Protected by copyright. Copying for private or commercial purposes, in part or in whole, is not permitted unless authorised by AUDI AG. AUDI AG does not guarantee or accept any liability with respect to the correctness of information in this document. Copyright by AUDI AG.

– Release the catch and open the cover -5- in the direction of -arrow-.
– Remove the nut -4-.
– Free up the wire -3-.
– Remove the nut -2-.
– Free up the coolant lines -1- on the threaded pin.

– Remove the nut -5-.
– Free up the wiring harness -4-.
– Remove the bolts -arrows-.
– Remove and free up the High-Voltage Wiring Harness for High-Voltage Battery - PX1- -1- and Drive Motor High-Voltage Wiring Harness - PX2- -3-.
– Release and remove the Electrical A/C Compressor High-Voltage Cable - P3- -2-.

Protected by copyright. Copying for private or commercial purposes, in part or in whole, is not permitted unless authorised by AUDI AG. AUDI AG does not guarantee or accept any liability with respect to the correctness of information in this document. Copyright by AUDI AG.

– To do so remove the connector lock -3- in direction of -arrow A-.
– Press the release -4- in the direction of -arrow B- and remove the connector -1- approximately 5 mm up to the next release level.
– Press the release -5- in the direction of -arrow D- and remove the connector from the connector mount -2- in the direction of -arrow C-.

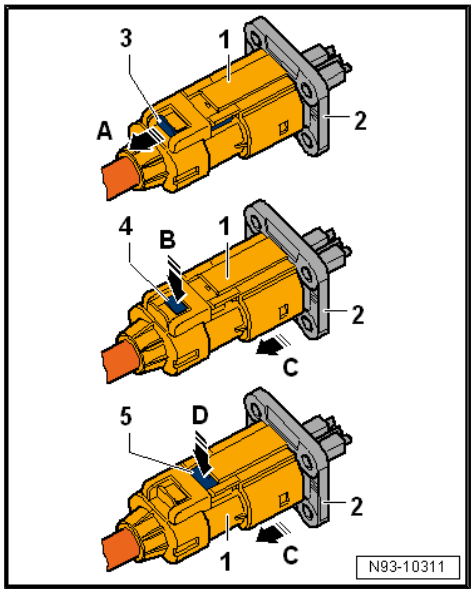

cardiagn.com

– Remove the nuts -1, 4 and 5-

– Remove the electric drive power and control electronics -3- in direction of -arrow-, at the same time push the coolant lines -2- to the side.

Installing

Install in reverse order of removal and note the following:

– Follow all steps after connecting the battery. Refer to ⇒ Electrical Equipment; Rep. Gr. 27 ; Battery; Battery, Disconnecting and Connecting .

– Fill with coolant and bleed the coolant system for the high-voltage system coolant circuit. Refer to ⇒ “1.3.4 Coolant, Filling and Bleeding Coolant System, Vehicle with High-Voltage System, High-Voltage System Coolant Circuit”, page 148 .

WARNING

Extremely dangerous due to high-voltage.

Severe bodily injury or death by electrocution is possible.

– Have a qualified person put the high-voltage system back into service.

– Re-energize the high-voltage system. Refer to ⇒ “8 High-Voltage System, Re-Energizing”, page 366 .

Tightening Specifications

- Refer to ⇒ “4.1 Component Location Overview - Electric Drive Power and Control Electronics”, page 320
- Refer to ⇒ “6.1 Component Location Overview - High-Voltage Cables”, page 342
- Refer to ⇒ “9.2 Component Location Overview - Potential Equalization Cables”, page 368
- Refer to ⇒ Body Exterior; Rep. Gr. 66 ; Underbody Trim Panel; Overview - Underbody Trim Panels .

4.3 Electric Drive Power and Control Electronics - JX1- , Removing and Installing

Removing

– Remove the electric drive power and control electronics. Refer to ⇒ “4.2 Electric Drive Power and Control Electronics, Removing and Installing”, page 323 .

Protected by Copyright. Copying for private or commercial purposes, in part or in whole, is not permitted unless authorised by AUDI AG. AUDI AG does not guarantee or accept any liability with respect to the correctness of information in this document. Copyright by AUDI AG.

cardiagn.com

Left Bracket

– Pry out the cap -4- and remove the nut.
– Free up the wire -5- -arrow-.
– Remove the bolts -2 and 3-.
– Remove the bracket -1-.

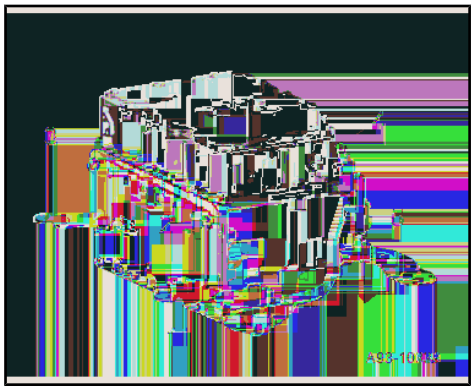

Right Bracket

– Free up the wire -1- -arrow-.
– Remove the bolts -2 and 4-.
– Remove the bracket -3-.

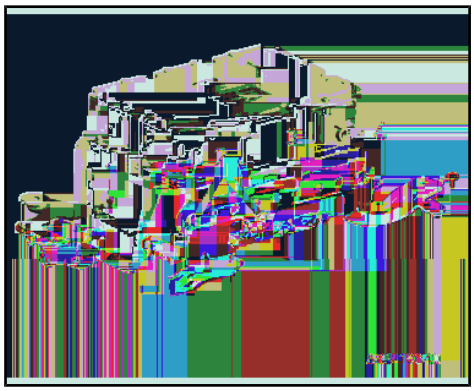

Installing

Install in reverse order of removal and note the following:

– Install the electric drive power and control electronics. Refer to
⇒ “4.2 Electric Drive Power and Control Electronics, Removing and Installing”, page 323 .

Protected by copyright. Copying for private or commercial purposes, in part or in whole, is not permitted unless authorised by AUDI AG. AUDI AG does not guarantee or accept any liability with respect to the correctness of information in this document. Copyright by AUDI AG.

Tightening Specifications

◆ Refer to
⇒ “4.1.2 Component Location Overview - Electric Drive Power and Control Electronics and Mount”, page 322 .

cardiagn.com

5 Electric Drive Motor

⇒ “5.1 Overview - Electric Drive Motor”, page 327

⇒ “5.2 Three-Phase Current Drive VX54 , Removing and Installing”, page 330

⇒ “5.3 Centering Bracket, Removing and Installing”, page 335

⇒ “5.4 Drive Motor Temperature Sensor G712 , Removing and Installing”, page 336

⇒ “5.5 Drive Motor Rotor Position Sensor 1 G713 , Removing and Installing”, page 336

⇒ “5.6 Torsion Damper, Removing and Installing”, page 337

⇒ “5.7 Decoupler Actuator V606 , Removing and Installing”, page 339

⇒ “5.8 Coolant Connection, Removing and Installing”, page 340

5.1 Overview - Electric Drive Motor

1 - Bolt

- ❑ 62 Nm
- ❑ Replace after removing
- ❑ Quantity: 6
- ❑ Tightening procedure. Refer to ⇒ page 333 .

2 - Torsion Dampers

- ❑ Removing and installing. Refer to ⇒ “5.6 Torsion Damper, Removing and Installing”, page 337 .

3 - Three-Phase Current Drive - VX54-

- ❑ With front final drive
- ❑ Removing and installing. Refer to ⇒ “5.2 Three-Phase Current Drive VX54 , Removing and Installing”, page 330 .
- ❑ Heat shield tightening specifications. Refer to ⇒ Fig. ““Heat Shield - Tightening Specification”“ , page 330 and ⇒ Fig. ““Heat Shield - Tightening Specification”“ , page 330 .

4 - O-ring

- ❑ Replace after removing

5 - Bolt

- ❑ Tightening specification. Refer to ⇒ Fig. ““ Three-Phase Current Drive -VX54- - Tightening Specifications”“ , page 329 .

cardiagn.com

6 - Coolant Connection

- ❑ Removing and installing. Refer to ⇒ “5.8 Coolant Connection, Removing and Installing”, page 340 .

7 - Bolt

- ❑ 6 Nm

8 - Bolt

- ❑ Tightening specification. Refer to ⇒ Fig. “” Drive Motor Rotor Position Sensor 1 -G713- ”“ , page 329 .

9 - Drive Motor Rotor Position Sensor 1 - G713-

- ❑ Removing and installing. Refer to ⇒ “5.5 Drive Motor Rotor Position Sensor 1 G713 , Removing and Installing”, page 336 .

10 - Seal

- ❑ Replace after removing

11 - Vent Plug

12 - O-Ring

- ❑ Replace after removing

13 - Bolt

- ❑ 6 Nm

14 - Coolant Connection

- ❑ Removing and installing. Refer to ⇒ “5.8 Coolant Connection, Removing and Installing”, page 340 .

15 - Seal

- ❑ For the protective pipe

16 - Centering Bracket

- ❑ Removing and installing. Refer to ⇒ “5.3 Centering Bracket, Removing and Installing”, page 335 .

17 - O-Ring

- ❑ Replace after removing

18 - Drive Motor Temperature Sensor - G712-

- ❑ Removing and installing. Refer to ⇒ “5.4 Drive Motor Temperature Sensor G712 , Removing and Installing”, page 336 .

19 - Bolt

- ❑ 6.5 Nm

20 - Retaining Plate

21 - Driver

22 - O-Ring

- ❑ Replace after removing

23 - Decoupler Actuator - V606-

- ❑ Removing and installing. Refer to ⇒ “5.7 Decoupler Actuator V606 , Removing and Installing”, page 339 .

24 - Bolt

- ❑ Refer to ⇒ Fig. “” Decoupler Actuator -V606- - Tightening Specification and Sequence”“ , page 329 .

25 - Cover

Protected by copyright. Copying for private or commercial purposes, in part or in whole, is not permitted unless authorised by AUDI AG. AUDI AG does not guarantee or accept any liability with respect to the correctness of information in this document. Copyright by AUDI AG.

cardiagn.com

Decoupler Actuator - V606- - Tightening Specification and Sequence

– Tighten the bolts to 9 Nm in the sequence -1 to 3-.

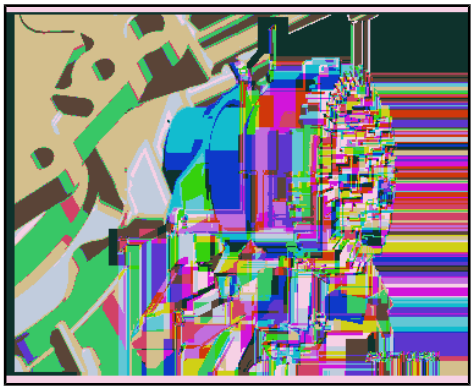

Drive Motor Rotor Position Sensor 1 - G713-

– Tighten the bolts to 7 Nm in the sequence -1 to 4-.

Three-Phase Current Drive - VX54- - Tightening Specifications

Item	Bolt	Nm
1	M10 x 50 1)	30 +90°
2 to 6	M12x100 1)	30 +90°
7	M12x125	30 +90°
8	M10x60 1)	15 +90°
9	M10x75 1)	15 +90°
10	M10x95 1)	15 +90°
A	Alignment sleeves for centering	

- 1) Aluminum bolts may be used two times. Refer to ⇒ page 329 .

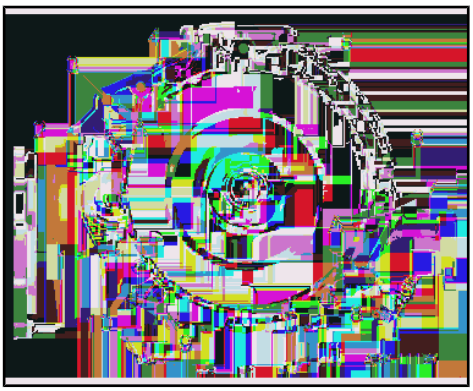

- The aluminum bolts -2 to 11- may be used twice. Therefore, the bolts must be marked with two notches “X” made by a chisel after they have be used the first time -arrow- .
- To prevent damaging the bolts when marking them, do not clamp them in a vise. Insert the bolt using a 14 mm socket with a $^{1}/_{2}$ drive, which is inserted in to the vise, as shown.
- Bolts marked with an “X” may not be used again.

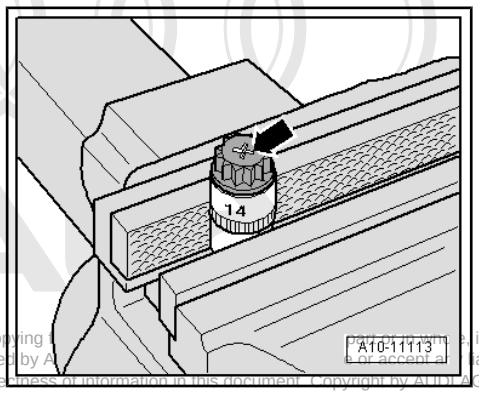

Protected by copyright. Copying for private or commercial purposes, is not permitted unless authorised by AUDI AG. AUDI AG does not guarantee or accept any liability with respect to the correctness of information in this document. Copyright by AUDI AG.

cardiagn.com

Heat Shield - Tightening Specification

– Tighten the bolts -arrows- to 9 Nm.

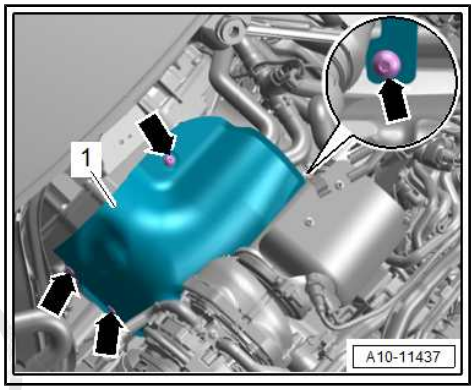

Heat Shield - Tightening Specification

– Tighten the bolts -arrows- to 9 Nm.

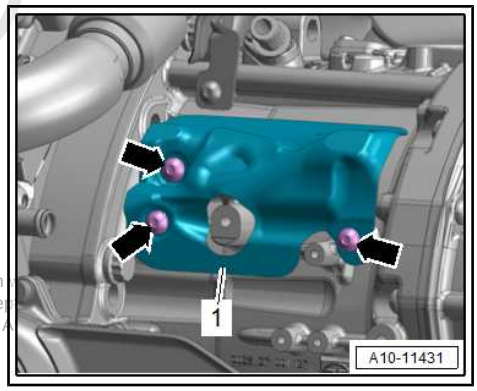

Protected by copyright. Copying for private or commercial purposes, in part or in
permitted unless authorised by AUDI AG. AUDI AG does not guarantee or accep
with respect to the correctness of information in this document. Copyright by A

5.2 Three-Phase Current Drive - VX54- , Removing and Installing

Special tools and workshop equipment required

- Hose Clamps - Up To 25mm - 3094-
- Transmission Support - 3282-
- Transmission Support - Pins 45 - 3282/45-
- Torque Wrench 1332 Insert - Ring Wrench - 16mm - VAG1332/14-
- Hose Clip Pliers - VAS6362-
- Hose Clip Pliers - VAS6340-
- Engine and Gearbox Jack - VAS6931-
- Puller - Clutch Module - T40176-
- Wrench - 21mm - T40263-
- Valve Cotter Tool Kit - Adapter - T40314-
- Cleaning Solution - D 009 401 04-
- Universal Adhesive - D 001 200 M2-
- Two M8x15 bolts

Removing

- The transmission is removed. Refer to ⇒ 8-Speed Automatic Transmission; Rep. Gr. 37 ; Transmission, Removing and Installing; Transmission Removing .

– Remove the left and right drive axles from the flange shaft. Refer to ⇒ Suspension, Wheels, Steering; Rep. Gr. 40 ; Drive Axles; Drive Axles Removing and Installing .

cardiagn.com

– Remove the right drive axle heat shield. Refer to ⇒ Suspension, Wheels, Steering; Rep. Gr. 40 ; Drive Axle; Drive Axle Heat Shield, Removing and Installing .

– Remove the steering intermediate shaft from the steering gear and push together. Refer to ⇒ Suspension, Wheels, Steering; Rep. Gr. 48 ; Steering Column; Steering Intermediate Shaft, Removing and Installing .

– Drain the coolant for the high-voltage system coolant circuit. Refer to
⇒ "1.3.3 Coolant, Draining and Filling, Vehicle with High-Voltage System, High-Voltage System Coolant Circuit", page 146 .

– Remove the coolant hoses, to do so, loosen the hose clamps -arrows-.

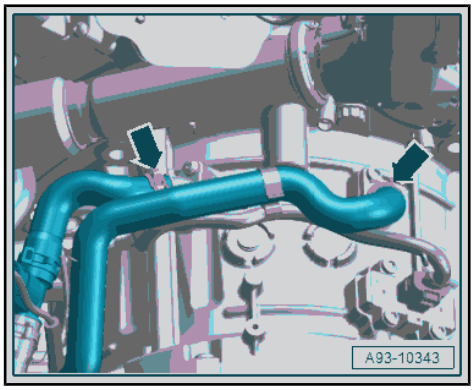

Protected by copyright. Copying for private or commercial purposes, in part or in whole, is not permitted unless authorised by AUDI AG. AUDI AG does not guarantee or accept any liability with respect to the correctness of information in this document. Copyright by AUDI AG.

– Remove the lower cover -1- from the Three-Phase Current Drive - VX54- -arrow-.

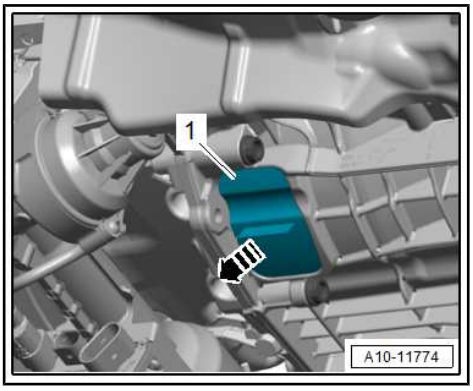

– To loosen the bolts for the torsion dampers, counterhold the crankshaft using the -T40263- and -T40314- .

NOTICE

Risk of damaging the engine by the timing mechanism skipping.

– Only let the engine turn in the direction of engine rotation.

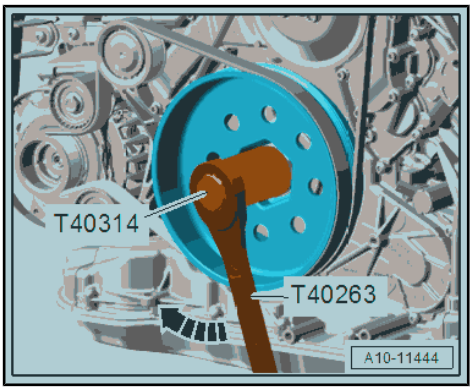

– Turn the crankshaft an additional 60° respectively in the direction of engine rotation in direction of -arrow-.

– Remove the six bolts -arrow- for the torsion dampers on the drive plate -1-.

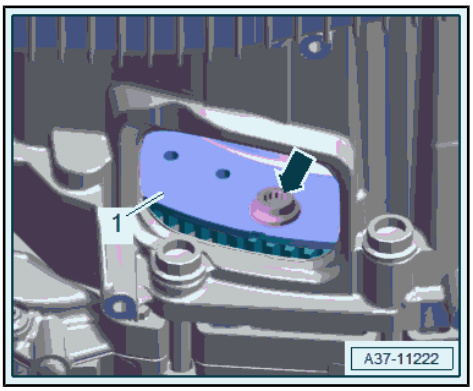

cardiagn.com

– Position the -VAS6931- with the -3282- under the vehicle.
– Align the -3282- parallel to the Three-Phase Current Drive - VX54- .
– Insert the -3282/45- on the right side in the transmission housing and secure the Three-Phase Current Drive - VX54- on the transmission support Three-Phase Current Drive - VX54- as shown with a M8x15 bolt -arrow-.

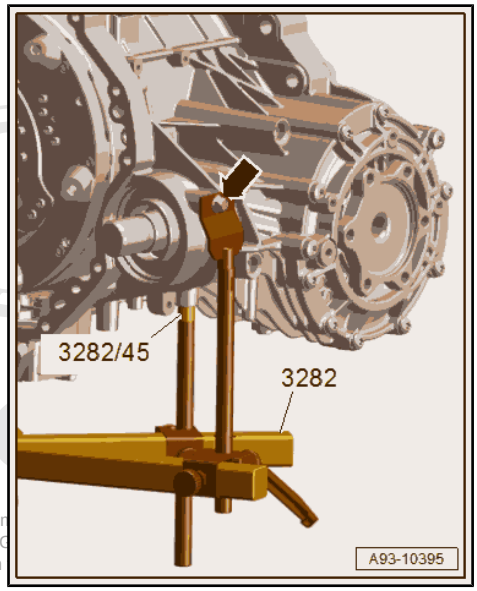

Protected by copyright. Copying for private or comm
permitted unless authorised by AUDI AG. AUDI AG
with respect to the correctness of information in

– Insert the hook -1- in the left in the hole and secure the Three-Phase Current Drive - VX54- on the -3282- as shown with a M8x15 bolt -2-.
– Support the transmission with the -VAS6931- by lifting from below.

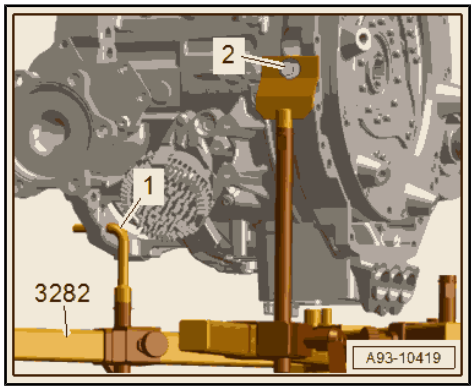

– Remove the bolts -2 to 10- that connect the engine to the Three-Phase Current Drive - VX54- .
– Loosen the bolt -1- for the starter installation opening cover.
– Remove the Three-Phase Current Drive - VX54- from the engine alignment sleeves and pull slightly toward the rear at the same time completely remove the bolt for the cover for the starter installation opening.
– Carefully lower the Three-Phase Current Drive - VX54- with the -VAS6931- at the same time do not pinch the wires.

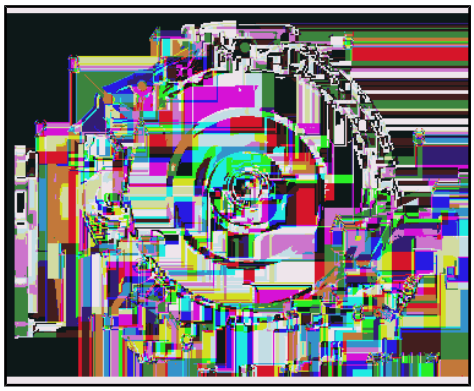

Installing

- Secure all hose connections with hose clamps that match the ones used in series production. Refer to the Parts Catalog.
- The securing components for the wires must correspond to the production series. Refer to Parts Catalog.

cardiagn.com

– The following preparations must be made before connecting the engine and the Three-Phase Current Drive - VX54- .
– Clean the contact surface -1- on the lower cover for the timing chain and on the locking piece -2- with Cleaning Solution - D 009 401 04- .
– Attach the locking piece to the lower timing chain cover using the Universal Adhesive - D 001 200 M2- . While doing so, pay attention to the directions.
– Bring the cover for the starter installation opening into the installation position.

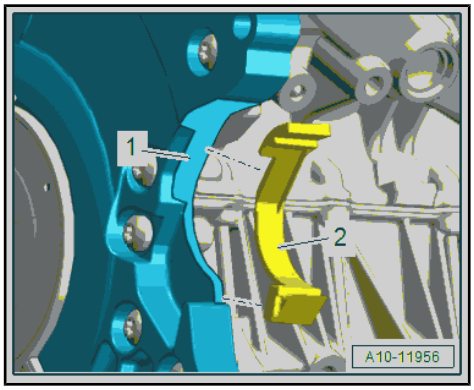

– Check if the alignment sleeves -A- for centering the engine and Three-Phase Current Drive - VX54- in the cylinder block are installed.
– Inspect the aluminum bolts used to connect the engine to the transmission to see if they can be used again and mark them, if necessary. Refer to ⇒ page 329 .
– When guiding together the engine and the Three-Phase Current Drive - VX54- make sure that the locking piece is seated correctly.
– Place the Three-Phase Current Drive - VX54- on the engine and at the same time install the bolt -1- for the cover for the starter installation opening.
– Install the bolts -2 to 10- all the way by hand.
– Tighten the bolts -1 to 10-.

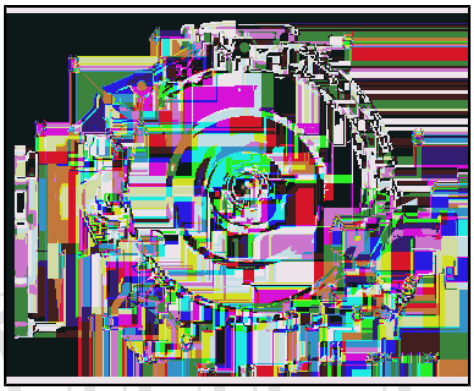

• The following step is necessary to make sure the torsion dampers rests on the drive plate evenly and is not tilted.

– Press the torsion damper -2- slightly in against the drive plate -3- in the direction of -arrow- using an extractor lever -1-.
– Tighten the torsion damper to the drive plate as follows:

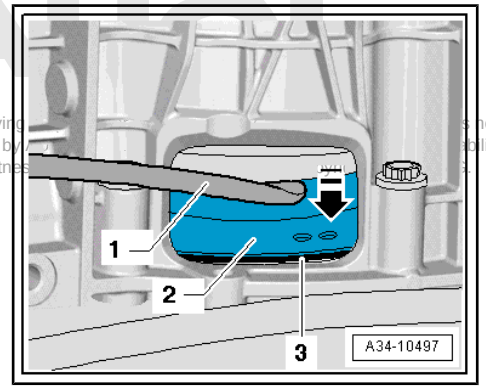

Protected by copyright. Copying permitted unless authorised by with respect to the correctness
cardiagn.com

– Turn the torsion damper so that the hole near the notch -arrow- is visible as shown in the lower opening in the three-phase current drive housing.

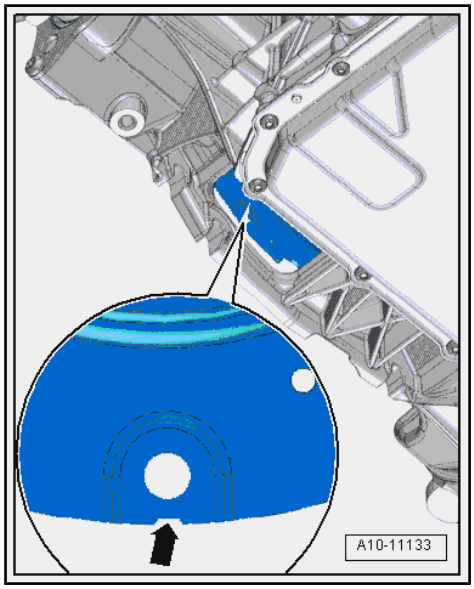

TIP:

There is only one notch on the circumference, so rotate the torsion damper as needed.

NOTICE

Risk of damaging the engine by the timing mechanism skipping.

– Only let the engine turn in the direction of engine rotation.

– In this position tighten the accessible bolt -arrow- for the torsion damper -1-. Refer to
⇒ “5.1 Overview - Electric Drive Motor”, page 327 .

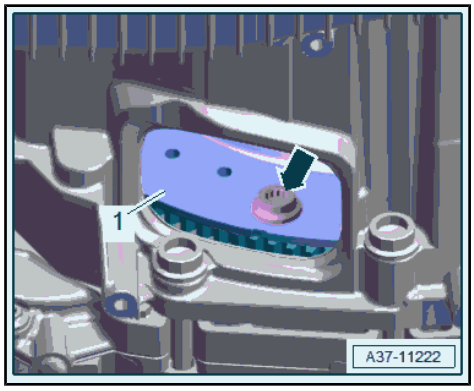

TIP:

Use the -VAG1332/14- to tighten the bolts.

Protected by copyright. Copying for private or commercial purposes, in part or in whole, is not permitted unless authorised by AUDI AG. AUDI AG does not guarantee or accept any liability with respect to the correctness of information in this document. Copyright by AUDI AG.

cardiagn.com

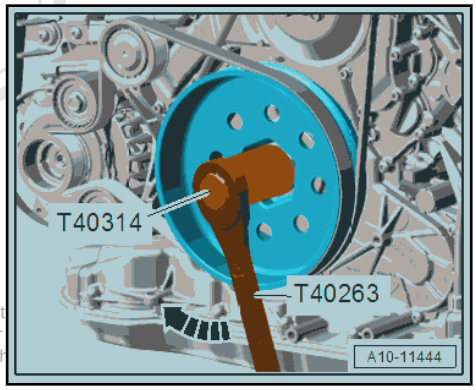

– Then turn the crankshaft 60° farther -arrow- and tighten the remaining five bolts to the tightening specification. Refer to ⇒ “5.1 Overview - Electric Drive Motor”, page 327 .

Further installation is performed in reverse order of removal, while noting the following:

– Attach the steering intermediate shaft to the steering gear. Refer to ⇒ Suspension, Wheels, Steering; Rep. Gr. 48 ; Steering Column; Steering Intermediate Shaft, Removing and Installing .

Protected by copyright. Copying for private or commercial purposes, in part
with respect to the correctness of information in this document. Copyrigh

– Fill with coolant for the high-voltage system coolant circuit. Refer to ⇒ “1.3.3 Coolant, Draining and Filling, Vehicle with High-Voltage System, High-Voltage System Coolant Circuit”, page 146 .

- If the Three-Phase Current Drive - VX54- is replaced, select the function “Drive Motor Recalibration” in Guided Functions. Refer to Vehicle Diagnostic Tester .

Tightening Specifications

- Refer to ⇒ Fig. ““ Three-Phase Current Drive -VX54- - Tightening Specifications”“ , page 329
- Refer to ⇒ “5.1 Overview - Electric Drive Motor”, page 327
- Refer to ⇒ Suspension, Wheels, Steering; Rep. Gr. 40 ; Drive Axle; Overview - Drive Axle .
- Refer to ⇒ Suspension, Wheels, Steering; Rep. Gr. 40 ; Drive Axle; Drive Axle Heat Shield, Removing and Installing .

5.3 Centering Bracket, Removing and Installing

Special tools and workshop equipment required

- Seal Installer - Crankshaft - T10174-
- Puller - Crankshaft/Power Steering Seal 2 - T20143/2-

Procedure

- The transmission is removed. Refer to ⇒ 8-Speed Automatic Transmission; Rep. Gr. 37 ; Transmission, Removing and Installing; Transmission Removing .

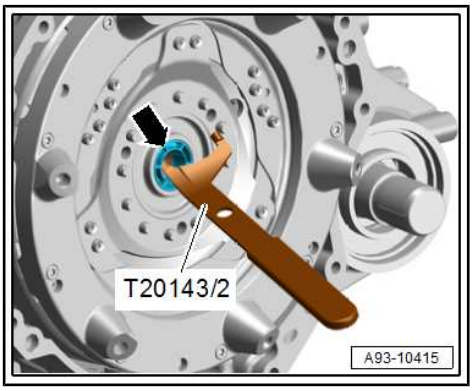

– Pry out the centering bracket -arrow- using the -T20143/2- .

– Clean the seat surface for the centering bracket.

cardiagn.com

– Press in the centering bracket flush -arrow- using the -T10174- .

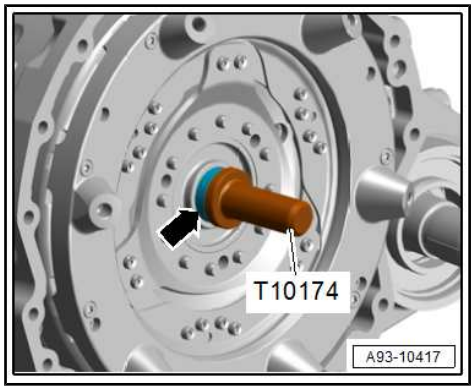

5.4 Drive Motor Temperature Sensor - G712- , Removing and Installing

Special tools and workshop equipment required

♦ Vehicle Diagnostic Tester

Removing

- Torsion damper removed. Refer to ⇒ “5.6 Torsion Damper, Removing and Installing”, page 337 .

– Disconnect the connector -4-.

– Remove the bolt -1-.

– Release the catch in the direction of -arrow- and remove the connector -3- from the retaining plate -2-.

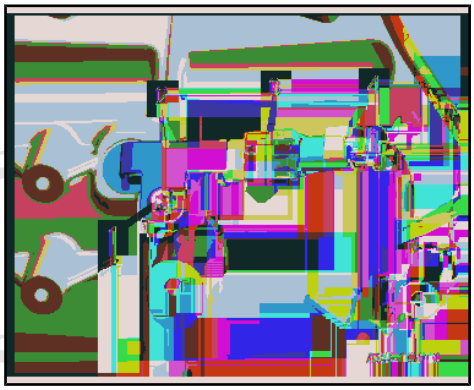

– Remove the bolt -1- and remove the retaining plate -3- upward.

– Carefully remove the plugs -2- from the housing and remove the Drive Motor Temperature Sensor - G712- .

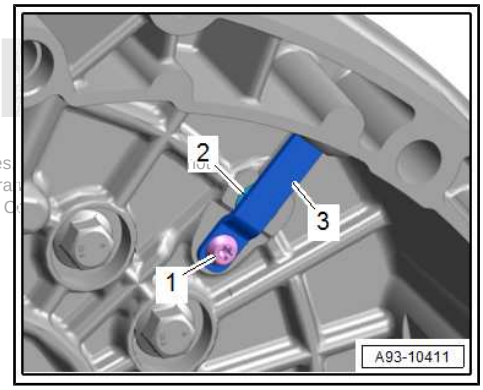

Installing

Install in reverse order of removal and note the following:

Protected by copyright. Copying for private or commercial purposes, in part or in whole, is not permitted unless authorized by AUDI AG. Audi AG does not guarantee or accept any liability with respect to the correctness of information in this document. Copyright by AUDI AG.

- Clean the sealing surface for the plugs.
- After installing perform the NTC resistance measurement. Refer to Vehicle Diagnostic Tester .

Tightening Specifications

♦ Refer to ⇒ “5.1 Overview - Electric Drive Motor”, page 327

5.5 Drive Motor Rotor Position Sensor 1 - G713- , Removing and Installing

Removing

- When installing, install all heat shield boots back in the same positions.

cardiagn.com

– Remove the emissions control module. Refer to ⇒ “2.2 Emissions Control Module, Removing and Installing”, page 268 .

– Remove the bolts -arrows- and remove the heat shield -1-.

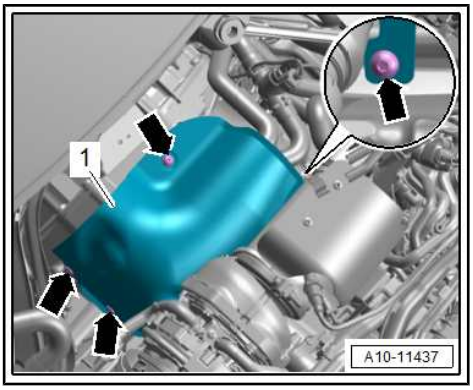

– Disconnect the connector -arrow- by opening the heat shield boot.

– Remove the bolts -4 to 1- and the Drive Motor Rotor Position Sensor 1 - G713- .

– Cover the installation opening for the electric drive drive motor with a clean cloth.

Installing

Install in reverse order of removal and note the following:

- Clean the sealing surface for the rotor position sensor.

– Install the emissions control module. Refer to ⇒ “2.2 Emissions Control Module, Removing and Installing”, page 268 .

Tightening Specifications

♦ Refer to ⇒ “5.1 Overview - Electric Drive Motor”, page 327

5.6 Torsion Damper, Removing and Installing

Special tools and workshop equipment required

♦ Puller - Clutch Module - T40176-

♦ Grease for Clutch Plate Splines - G 000 100-

♦ Sealing Grease - G 052 128 A1-

Removing

- The Three-Phase Current Drive - VX54- is removed. Refer to ⇒ “5.2 Three-Phase Current Drive VX54 , Removing and Installing”, page 330 .

– Remove the left flange shaft. Refer to ⇒ 8-Speed Automatic Transmission; Rep. Gr. 39 ; Differential; Left Flange Shaft, Removing and Installing .

Protected by copyright. Copying for private or commercial purposes, in part or in whole, is not permitted unless authorised by AUDI AG. AUDI AG does not guarantee or accept any liability with respect to the correctness of information in this document. Copyright by AUDI AG.

cardiagn.com

– Secure the -T40176- on the torsion damper -1- with the nut -2-.

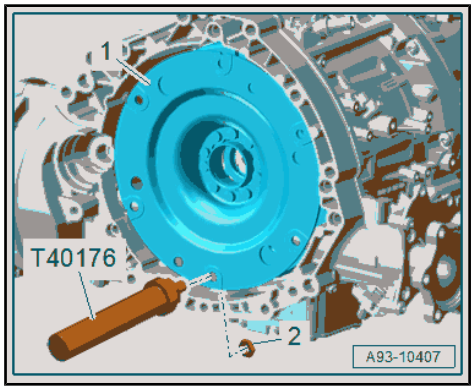

– Turn the -T40176- upward.

– To prevent the torsion damper from tipping, counterhold on the bottom of the torsion damper as shown.

– Remove the torsion damper without tilting from the input shaft -arrow-.

– Place the torsion damper carefully on the workbench.

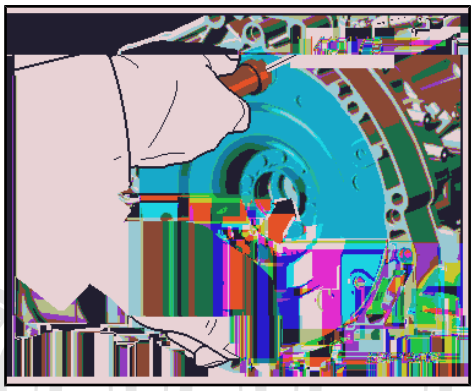

Installing

Install in reverse order of removal and note the following:

– Thoroughly clean the seal -arrow B- and the transmission housing in the accessible area to the differential -arrow A-.

• A damaged seal between the differential and transmission housing -arrow B- must be replaced. Refer to ⇒ 8-Speed Automatic Transmission; Rep. Gr. 39 ; Seals; Component Location Overview - Seals .

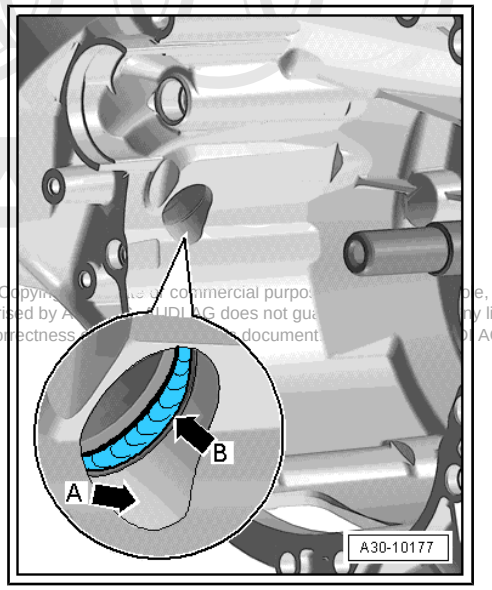

Protected by copyright. Copyright ... commercial purpo... ...le, is not permitted unless authorised by A... AUDI AG does not gua... ...y liability with respect to the correctness ... document ... AG.

– Fill the area between the sealing/dust lip -arrow- halfway with Sealing Grease - G 052 128 A1- .

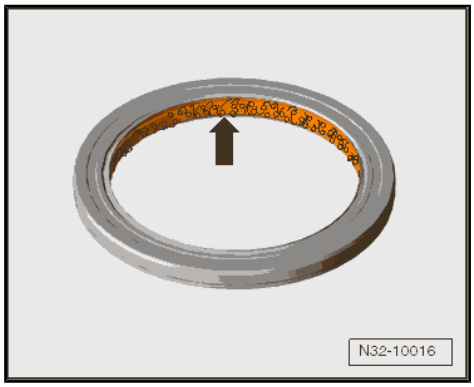

cardiagn.com

– Coat the input shaft -arrow- thinly with Grease For Clutch Plate Splines - G 000 100- .
– Slide on the torsion damper -1- with the -T40176- carefully and without tilting all the way on the input shaft.
– Remove the -T40176- from the torsion damper
– Install the left flange shaft. Refer to ⇒ 8-Speed Automatic Transmission; Rep. Gr. 39 ; Differential; Left Flange Shaft, Removing and Installing .

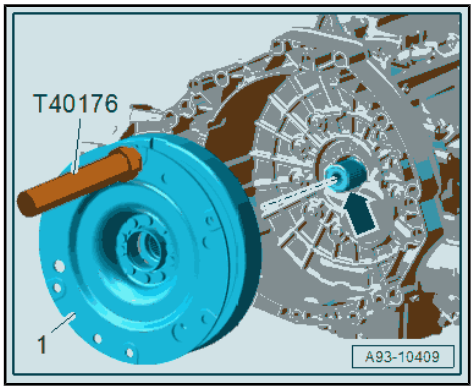

5.7 Decoupler Actuator - V606- , Removing and Installing

Removing

– Remove the left subframe shield upper section. Refer to ⇒ Suspension, Wheels, Steering; Rep. Gr. 40 ; Subframe; Subframe Shield, Removing and Installing .
– Remove the rear noise insulation. Refer to ⇒ Body Exterior; Rep. Gr. 66 ; Noise Insulation; Noise Insulation, Removing and Installing .
– Disconnect the connector -arrow-.
– Remove the bolts -3 to 1- and the Decoupler Actuator - V606- .

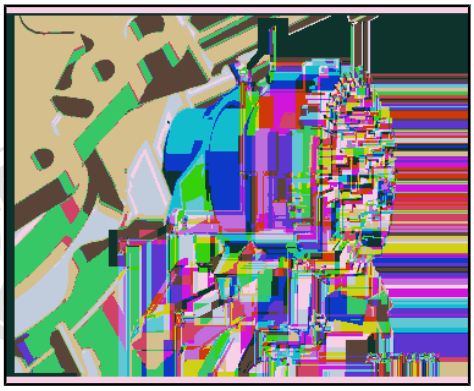

Installing

Install in reverse order of removal and note the following:

– Clean the sealing surface to the actuator.
– Secure the driver -2- with a suitable quantity of grease on the Decoupler Actuator - V606- -1- and position so that when positioning the symmetrical spring engages in the decoupler -arrow-.

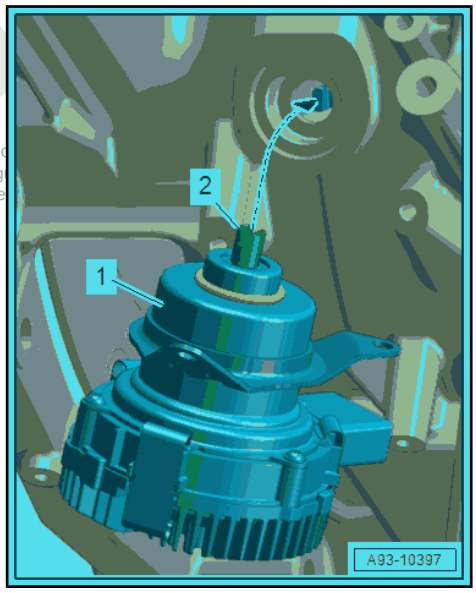

Tightening Specifications

♦ Refer to ⇒ “5.1 Overview - Electric Drive Motor”, page 327
♦ Refer to ⇒ Suspension, Wheels, Steering; Rep. Gr. 40 ; Subframe; Overview - Subframe .
♦ Refer to ⇒ Body Exterior; Rep. Gr. 66 ; Noise Insulation; Overview - Noise Insulation .

Protected by copyright. Copying for private or commercial purpo
permitted unless authorised by AUDI AG. AUDI AG does not g
warranty with regard to the contents of this docume
cardiagn.com

5.8 Coolant Connection, Removing and Installing

Special tools and workshop equipment required

- Hose Clamps - Up To 25 mm - 3094-
- Hose Clip Pliers - VAS6362-

Removing

– Remove the emissions control module. Refer to ⇒ “2.2 Emissions Control Module, Removing and Installing”, page 268 .

– Remove the bolts -arrows- and remove the heat shield -1-.

– Catch escaping coolant with a cloth.

Protected by copyright. ... permitted unless author... with respect to the c... ...ble, is not ...ny liability ...I AG.

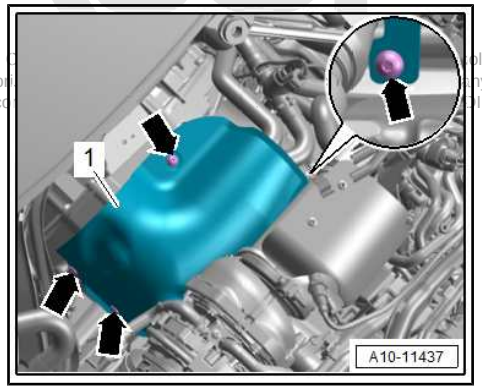

– Loosen the corresponding hose clamps -1 or 4-, then clamp off the coolant hoses with the -3094- and then remove them.

– Remove the bolt -2 or 3- and remove the coolant connection.

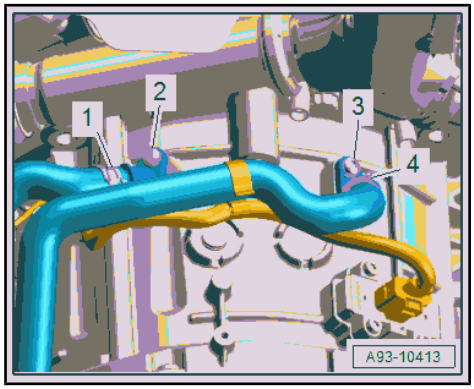

Installing

Install in reverse order of removal and note the following:

- Replace the O-rings after removing them.
- Secure all hose connections with hose clamps that match the ones used in series production. Refer to the Parts Catalog.
- Used coolant cannot be used again.

– Install the emissions control module. Refer to ⇒ “2.2 Emissions Control Module, Removing and Installing”, page 268 .

– Fill with coolant and bleed the coolant system for the high-voltage system coolant circuit. Refer to ⇒ “1.3.4 Coolant, Filling and Bleeding Coolant System, Vehicle with High-Voltage System, High-Voltage System Coolant Circuit”, page 148 .

Tightening Specifications

- Refer to ⇒ “5.1 Overview - Electric Drive Motor”, page 327

5.9 Three-Phase Current Drive, Transporting

Special tools and workshop equipment required

- Transmission Support Jig - 3336-
- Shop Crane - VAS6100-

cardiagn.com

Procedure

- The Three-Phase Current Drive - VX54- is removed. Refer to ⇒ “5.2 Three-Phase Current Drive VX54 , Removing and Installing”, page 330 .

– Tighten the -3336- on the Three-Phase Current Drive - VX54- .

– Adjust the support arm -2- on the sliding bar with the locking pin.

1 - Number of Visible Holes = 7

– Press the Three-Phase Current Drive - VX54- with the installed -3336- with the -VAS6100- .

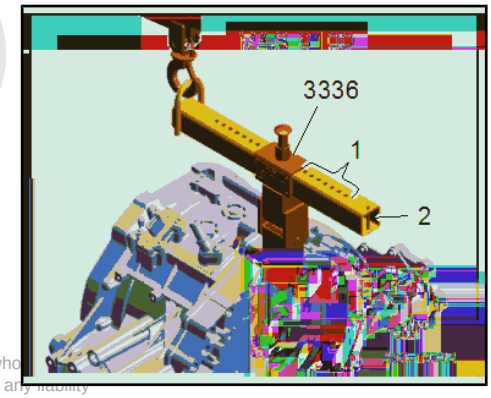

Protected by copyright. Copying for private or commercial purposes, in part or in whole, is not permitted unless authorised by AUDI AG. AUDI AG does not guarantee or accept any liability with respect to the correctness of information in this document. Copyright by AUDI AG.

cardiagn.com

6 High-Voltage Cables

⇒ “6.1 Component Location Overview - High-Voltage Cables”, page 342

⇒ “6.2 High-Voltage Wiring Harness for High-Voltage Battery, Removing and Installing”, page 347

⇒ “6.3 Drive Motor High-Voltage Wiring Harness, Removing and Installing”, page 352

⇒ “6.4 Electrical A/C Compressor High-Voltage Cable, Removing and Installing”, page 356

⇒ “6.5 High-Voltage Cable for High-Voltage Heater (PTC), Removing and Installing”, page 358

6.1 Component Location Overview - High-Voltage Cables

⇒ “6.1.1 Component Location Overview - High-Voltage Cables, Charger, High-Voltage Heater (PTC)”, page 342

⇒ “6.1.2 Component Location Overview - High-Voltage Cables, Electric Drive Power and Control Electronics and Hybrid Battery Unit”, page 344

⇒ “6.1.3 Component Location Overview - High-Voltage Cables, Electric Drive Power and Control Electronics and Drive Motor”, page 345

6.1.1 Component Location Overview - High-Voltage Cables, Charger, High-Voltage Heater (PTC)

Protected by copyright. Copying for private or commercial purposes, in part or in whole, is not permitted unless authorised by AUDI AG. AUDI AG does not guarantee or accept any liability with respect to the correctness of information in this document. Copyright by AUDI AG.

cardiagn.com

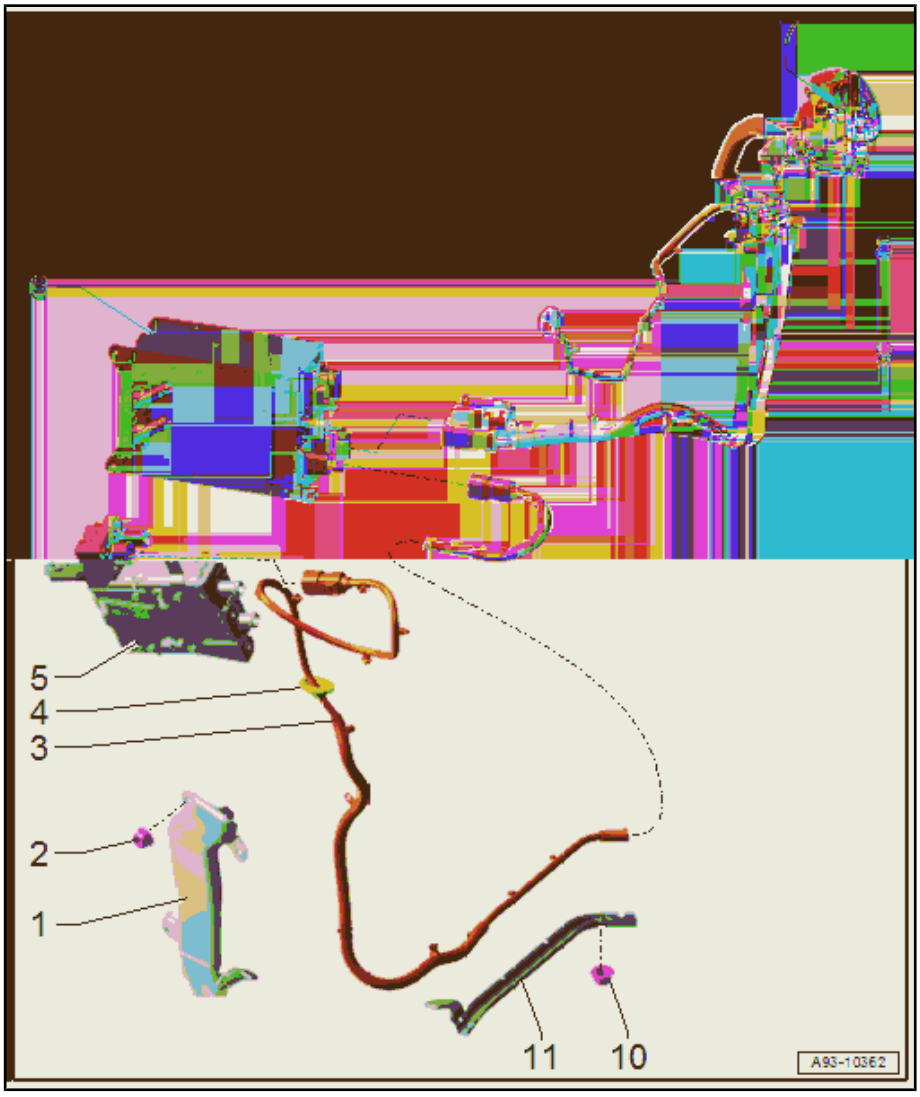

1 - Cover Plate

2 - Nut

- ❑ 4.5 Nm
- ❑ Quantity: 4

3 - High-Voltage Cable for High-Voltage Heater (PTC) - P11-

- ❑ Removing and installing. Refer to ⇒ “6.5 High-Voltage Cable for High-Voltage Heater (PTC), Removing and Installing”, page 358 .

4 - Grommet

5 - High-Voltage Heater (PTC) - Z115-

- ❑ Removing and installing. Refer to ⇒ Heating, Ventilation and Air Conditioning; Rep. Gr. 87 ; Component Location Overview - A/C System; Component Location Overview - Components Outside of Passenger Compartment .

6 - High-Voltage Battery Charger 1 - AX4-

- ❑ Overview. Refer to ⇒ “11.1 Overview - High-Voltage Battery Charger”, page 380 .

7 - High-Voltage Battery Charging Socket 1 - UX4-

- ❑ Overview. Refer to ⇒ “10.1 Overview - Charging Socket”, page 373 .

8 - Pass-Through

- ❑ Cannot be replaced separately

9 - High-Voltage Cable for High-Voltage Battery Charger - P25-

- ❑ To the High-Voltage Battery Charger 1 - AX4-
- ❑ Removing and installing. Refer to ⇒ “10.4 High-Voltage Battery Charging Socket 1 UX4 , Removing and Installing”, page 375 .

10 - Nut

- ❑ 3.8 Nm
- ❑ Quantity: 2

11 - Wiring Channel

- ❑ For high-voltage cable

Protected by copyright. Copying for private or commercial purposes, in part or in whole, is not permitted unless authorised by AUDI AG. AUDI AG does not guarantee or accept any liability with respect to the correctness of information in this document. Copyright by AUDI AG.

cardiagn.com

6.1.2 Component Location Overview - High-Voltage Cables, Electric Drive Power and Control Electronics and Hybrid Battery Unit

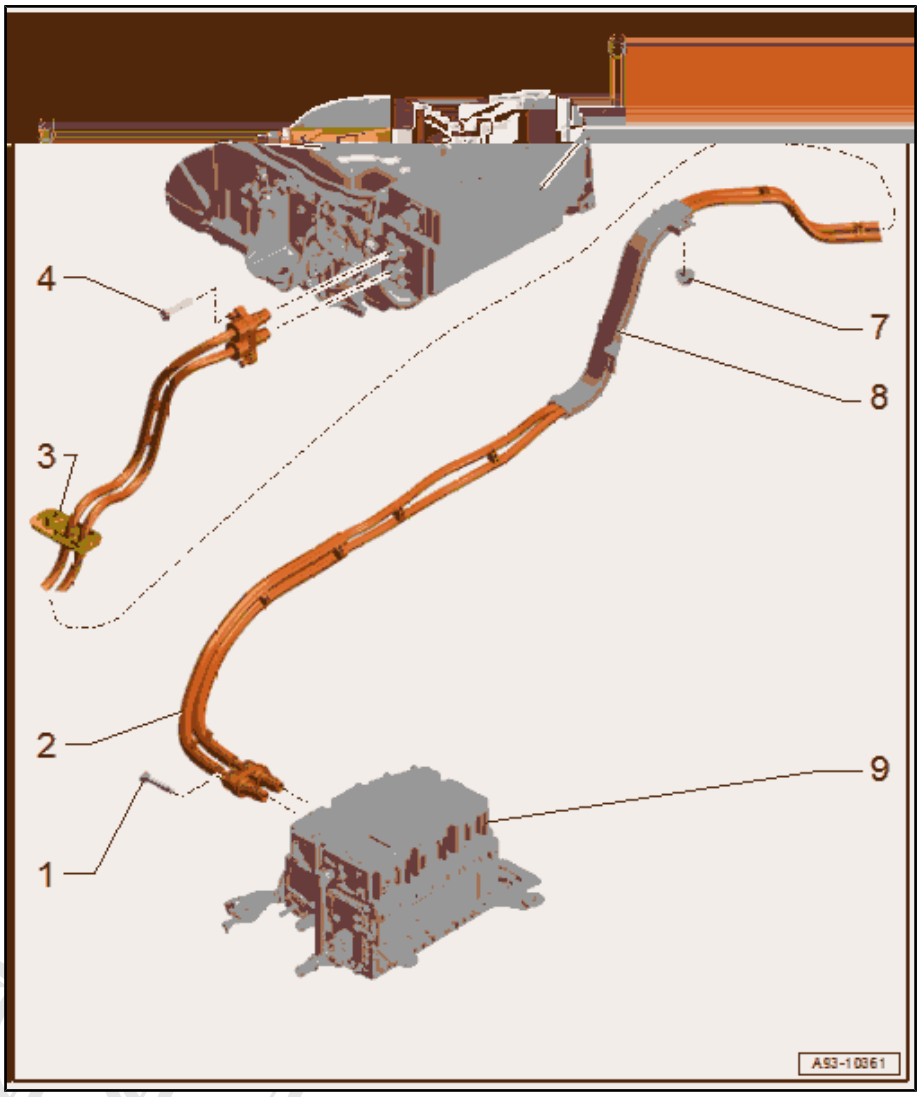

1 - Bolt

- ❑ 7 Nm
- ❑ Quantity: 2

2 - High-Voltage Wiring Harness for High-Voltage Battery - PX1-

- ❑ From the High-Voltage Battery Switch Box - SX6-
- ❑ Removing and installing. Refer to ⇒ “6.2 High-Voltage Wiring Harness for High-Voltage Battery, Removing and Installing”, page 347 .

3 - Pass-Through

- ❑ Cannot be replaced separately

4 - Bolt

- ❑ 7 Nm
- ❑ Quantity: 2

5 - Hybrid Battery Unit - AX1-

- ❑ Overview. Refer to ⇒ “3.1 Overview - High-Voltage Battery”, page 308 .

6 - High-Voltage Battery Switch Box - SX6-

- ❑ Overview. Refer to ⇒ “3.1 Overview - High-Voltage Battery”, page 308 .

7 - Nut

- ❑ 3.8 Nm
- ❑ Quantity: 2

8 - Wiring Channel

- ❑ For high-voltage cable

9 - Electric Drive Power and Control Electronics - JX1-

- ❑ Component location overview. Refer to ⇒ “4.1 Component Location Overview - Electric Drive Power and Control Electronics”, page 320 .

Protected by copyright. Copying for private or commercial purposes, in part or in whole, is not permitted unless authorised by AUDI AG. AUDI AG does not guarantee or accept any liability with respect to the correctness of information in this document. Copyright by AUDI AG.

cardiagn.com

6.1.3 Component Location Overview - High-Voltage Cables, Electric Drive Power and Control Electronics and Drive Motor

Electric Drive Power and Control Electronics

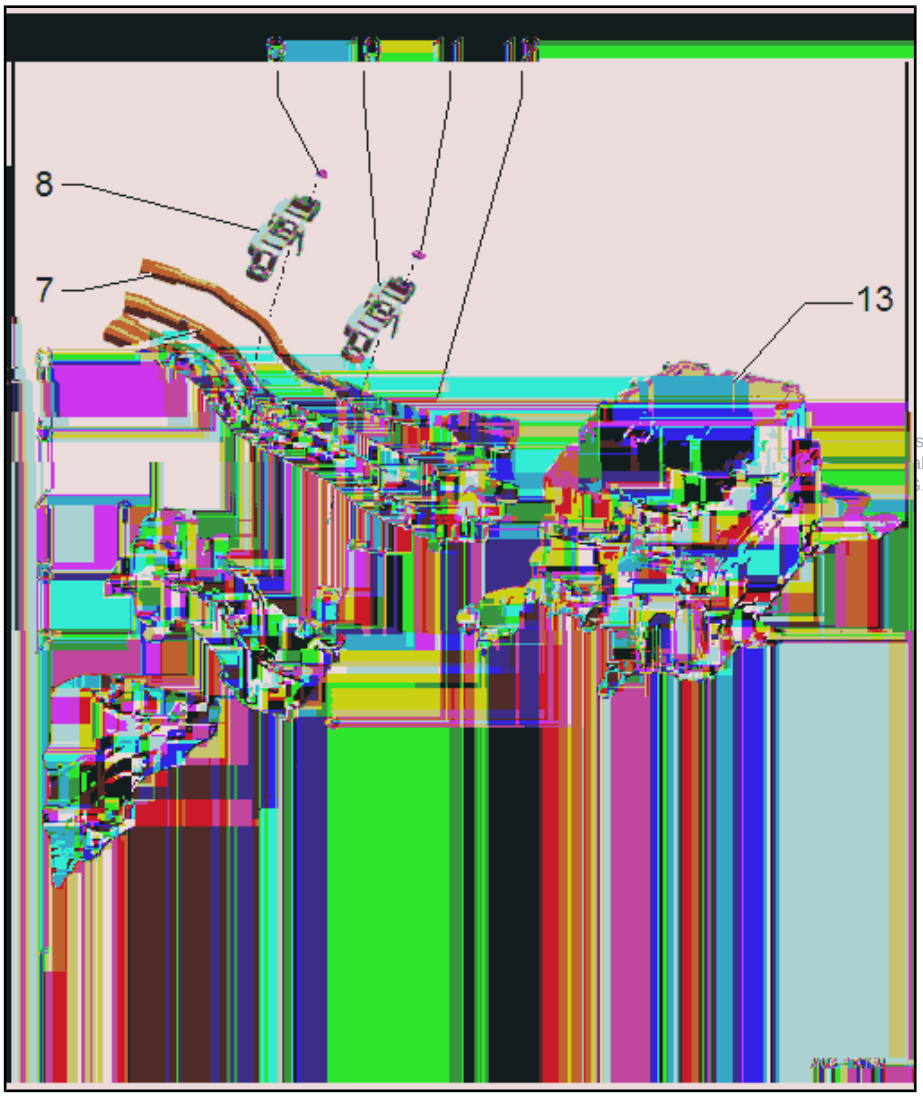

1 - Nut
- ❑ 5 Nm
- ❑ Quantity: 2

2 - Subframe

3 - Wiring Channel
- ❑ For high-voltage cable

4 - Bolt
- ❑ 9 Nm
- ❑ Quantity: 2

5 - Bolt
- ❑ 7 Nm
- ❑ Quantity: 2

6 - Drive Motor High-Voltage Wiring Harness - PX2-
- ❑ Removing and installing. Refer to ⇒ “6.3 Drive Motor High-Voltage Wiring Harness, Removing and Installing”, page 352 .

7 - Electrical A/C Compressor High-Voltage Cable - P3-
- ❑ To the Electrical A/C Compressor - V470-
- ❑ Removing and installing. Refer to ⇒ “6.4 Electrical A/C Compressor High-Voltage Cable, Removing and Installing”, page 356 .

8 - Upper Cable Holder
- ❑ For high-voltage cable

9 - Nut
- ❑ 5 Nm
- ❑ Quantity: 3

10 - Lower Cable Holder
- ❑ For high-voltage cable

11 - Nut
- ❑ 5 Nm
- ❑ Quantity: 3

12 - Bolt
- ❑ 7 Nm
- ❑ Quantity: 2

cardiagn.com

13 - Electric Drive Power and Control Electronics - JX1-

- ❑ Component location overview. Refer to ⇒ “4.1 Component Location Overview - Electric Drive Power and Control Electronics”, page 320 .

Drive Motor

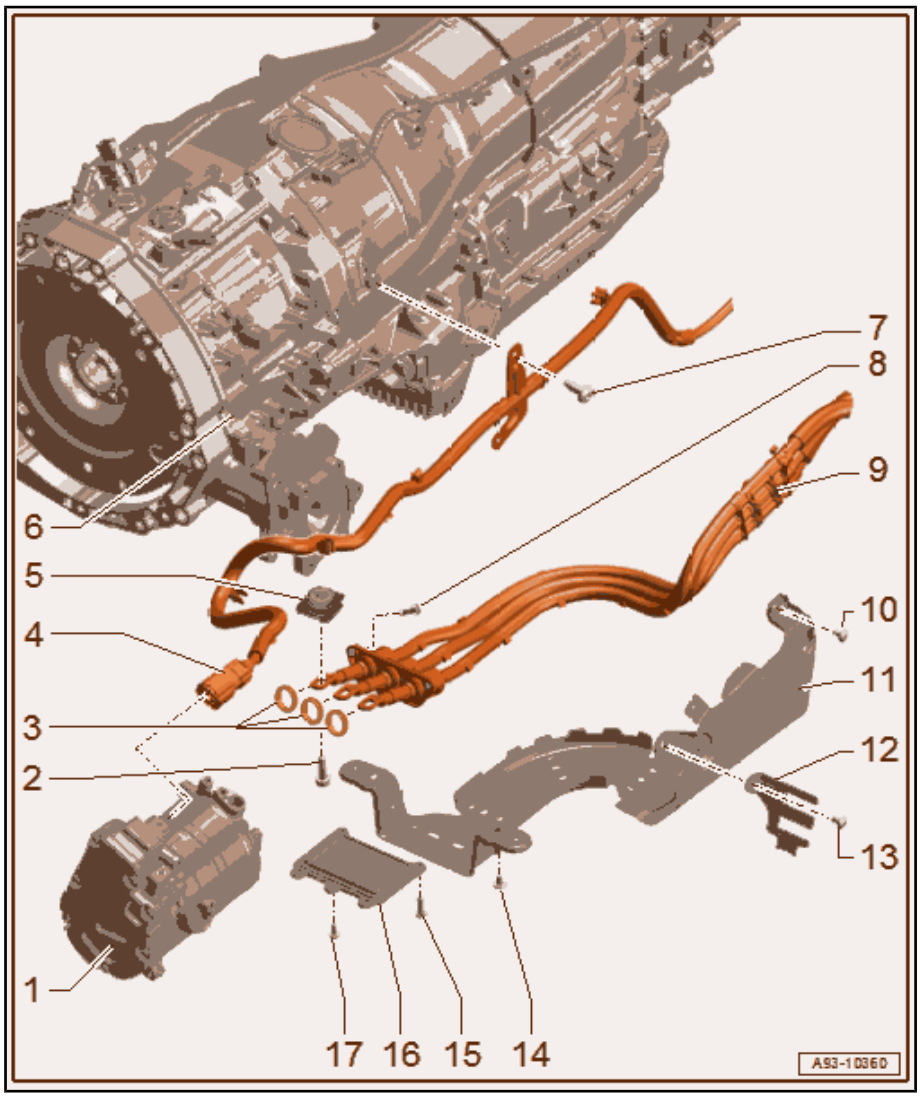

1 - Electrical A/C Compressor - V470-

- ❑ Overview. Refer to ⇒ Heating, Ventilation and Air Conditioning; Rep. Gr. 87 ; A/C Compressor; Overview - A/C Compressor Power Unit .

2 - Bolt

- ❑ 21 Nm
- ❑ Quantity: 3

3 - Seals

- ❑ Replace if damaged

4 - Electrical A/C Compressor High-Voltage Cable - P3-

- ❑ To the Electric Drive Power and Control Electronics - JX1-
- ❑ Removing and installing. Refer to ⇒ “6.4 Electrical A/C Compressor High-Voltage Cable, Removing and Installing”, page 356 .

5 - Adapter

- ❑ For the Drive Motor High-Voltage Wiring Harness - PX2- connection

6 - Three-Phase Current Drive - VX54-

- ❑ With Electro-Drive Drive Motor - V141-
- ❑ Removing and installing. Refer to ⇒ “5.2 Three-Phase Current Drive VX54 , Removing and Installing”, page 330 .

7 - Bolt

- ❑ 5 Nm
- ❑ Quantity: 2

8 - Bolt

- ❑ 7 Nm
- ❑ Quantity: 3

9 - Drive Motor High-Voltage Wiring Harness - PX2-

- ❑ Removing and installing. Refer to ⇒ “6.3 Drive Motor High-Voltage Wiring Harness, Removing and Installing”, page 352 .
- ❑ Check the contact surface for debris/corrosion and if required clean

cardiagn.com

10 - Bolt

- ❑ 9 Nm

11 - Wiring Channel

- ❑ For high-voltage cable

12 - Bracket

- ❑ For the connector

13 - Bolt

- ❑ 9 Nm

14 - Bolt

- ❑ 9 Nm
- ❑ Quantity: 2

15 - M6 Bolt

- ❑ Refer to ⇒ Fig. ""Drive Motor Cover - Tightening Specification and Sequence"" , page 347 .
- ❑ Quantity: 4

16 - Cap

- ❑ Replace after removing
- ❑ Check the housing sealing surface for damage/corrosion
- ❑ Install with Silicone Grease - 188 00 102 PB-
- ❑ Spray the seam between the cover and housing for the Three-Phase Current Drive - VX54- all around with Conservation Wax - D 308 SP5 A1-

Protected by copyright. Copying for private or commercial purposes, in part or in whole, is not permitted unless authorized by AUDI AG. Other rights reserved. Copyright by AUDI AG.

17 - M5 Bolt

- ❑ Tightening specification. Refer to ⇒ Fig. ""Drive Motor Cover - Tightening Specification and Sequence"" , page 347 .

Drive Motor Cover - Tightening Specification and Sequence

- Pay attention to the installation instructions. Refer to ⇒ page 355 .

– Tighten the bolts in the steps shown in the sequence:

Step	Bolts	Tightening Specification
1.	-1 to 5-	2 Nm
2.	-1, 2, 4 and 5-	8 Nm
3.	-3-	4 Nm

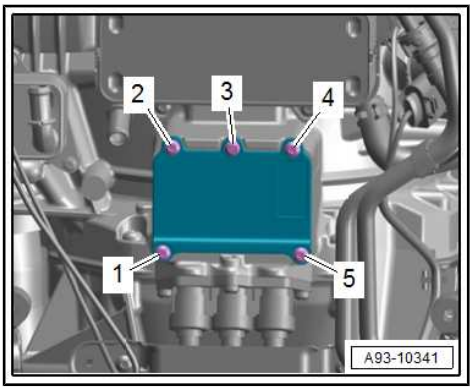

6.2 High-Voltage Wiring Harness for High-Voltage Battery, Removing and Installing

Special tools and workshop equipment required

- ♦ Pry Lever - 80-200-
- ♦ Engine and Gearbox Jack - VAS6931-
- ♦ Gearbox Support - T40173-

cardiagn.com

Removing

DANGER

Extremely dangerous due to high-voltage.

Electrocution can cause death or very serious personal injury.

– Have the high-voltage system de-energized by a qualified person.

– De-energize the high-voltage system. Refer to ⇒ “7 High-Voltage System, De-Energizing”, page 364 .

– Remove the luggage compartment floor. Refer to ⇒ Body Interior; Rep. Gr. 70 ; Luggage Compartment Trim Panels; Luggage Compartment Floor, Removing and Installing .

– Remove the luggage compartment floor. Refer to ⇒ Body Interior; Rep. Gr. 70 ; Luggage Compartment Trim Panels; Luggage Compartment Floor Trim Panel, Removing and Installing .

– Remove the bolts -3-.

– Remove the High-Voltage Wiring Harness for High-Voltage Battery - PX1- -2-.

– Free up the high-voltage cable set using the -80-200- .

– Remove the pressure balance hose -1- for the hybrid battery unit at the pass-through -4- to do so push the catches on both sides.

– Release the catches in direction of -arrows- and guide out the pass-through with the high-voltage cable set downward through the body opening.

– Remove the front and rear underbody trim panel. Refer to ⇒ Body Exterior; Rep. Gr. 66 ; Underbody Trim Panel; Underbody Trim Panels, Removing and Installing .

– Remove the left heat shield for the rear tunnel. Refer to ⇒ Body Exterior; Rep. Gr. 66 ; Molding/Trim/Extensions/Trim Panels; Floor Heat Shield, Removing and Installing .

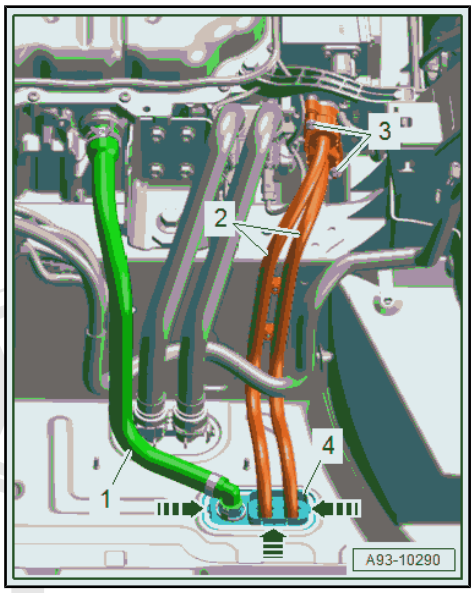

– Remove the bolts -arrows-.

– Remove the High-Voltage Wiring Harness for High-Voltage Battery - PX1- -1-.

– Free up the high-voltage cable set using the -80-200- .

– Lower the driveshaft center support. Refer to ⇒ Rear Final Drive; Rep. Gr. 39 ; Driveshaft; Driveshaft, Removing and Installing .

– Open the fuel filler door.

– Clean the area around the fuel filler neck.

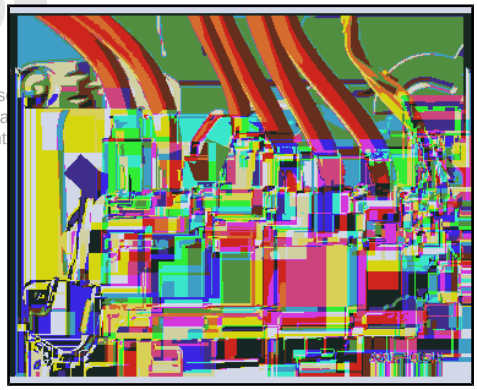

Protected by copyright. Copying for private or commercial purpos
permitted unless authorised by AUDI AG. AUDI AG does not gua
reliability of the information in this document
cardiagn.com

– Remove the fuel filler neck cap -arrow-.

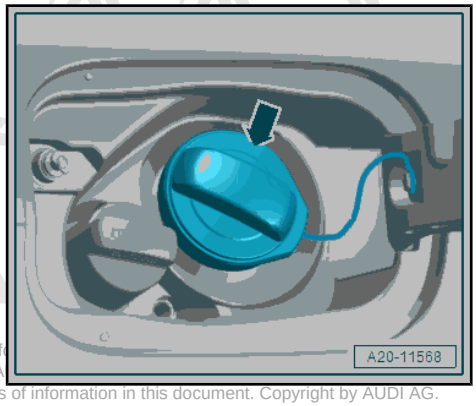

Protected by copyright. Copying f
permitted unless authorised by A
with respect to the correctness of information in this document. Copyright by AUDI AG.

– Remove the cap -arrow- from the reducing agent filler neck.
– Seal the fuel filler neck openings with a clean plug to prevent any dirt from getting in.
– Remove the right rear wheel housing liner. Refer to ⇒ Body Exterior; Rep. Gr. 66 ; Wheel Housing Liner; Rear Wheel Housing Liner, Removing and Installing .

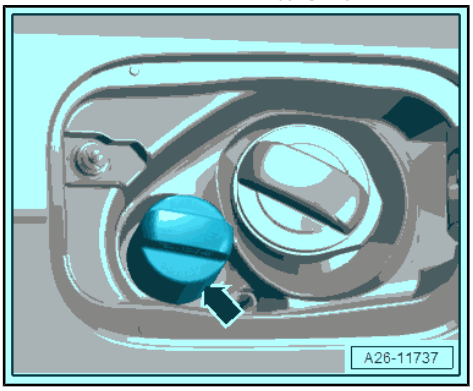

– Remove the fuel filler door unit. Refer to ⇒ Body Exterior; Rep. Gr. 55 ; Fuel Filler Door Unit; Fuel Filler Door Unit, Removing and Installing .
– Remove the fuel filler neck bolts -2-.

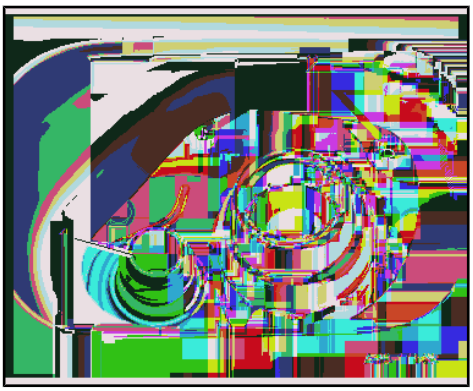

– Remove the nut -arrow- for the fuel filler neck.

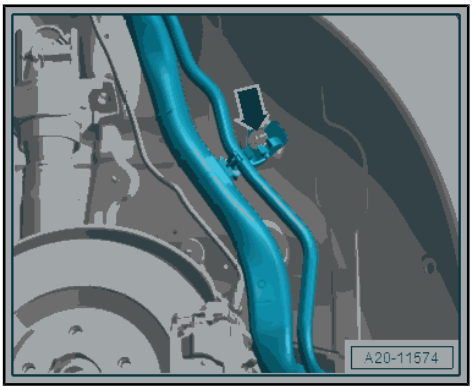

cardiagn.com

Market-Specific

– Disconnect the ground wire -2- from the fuel filler neck protective plate -1-.

– Remove the nut -arrow- for the fuel filler neck.

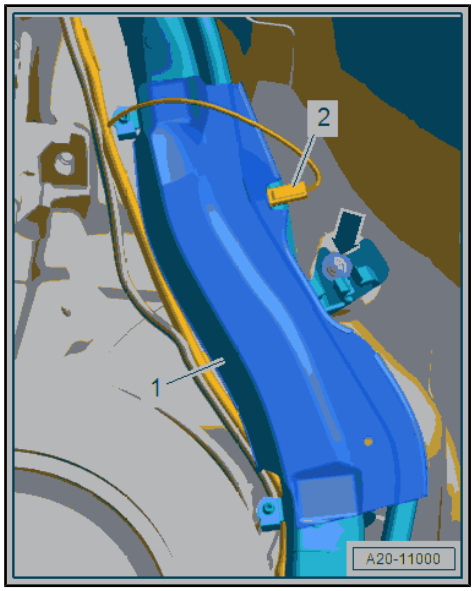

Continuation for All Vehicles

– Disengage the fuel filler neck -1- at the mount -3-.

– Remove the diagonal braces. Refer to ⇒ Body Exterior; Rep. Gr. 66 ; Underbody Trim Panel; Diagonal Braces, Removing and Installing .

– Remove the exhaust system rear section. Refer to ⇒ “1.3 Muffler, Removing and Installing”, page 263 .

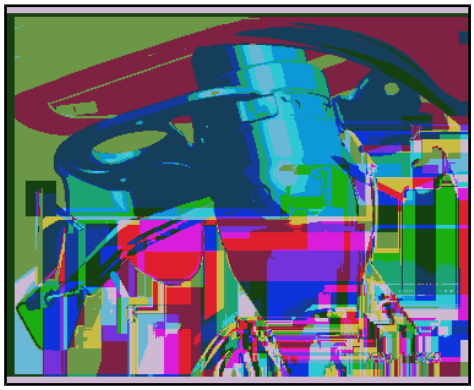

– Disconnect the connector -arrow- for the fuel delivery unit.

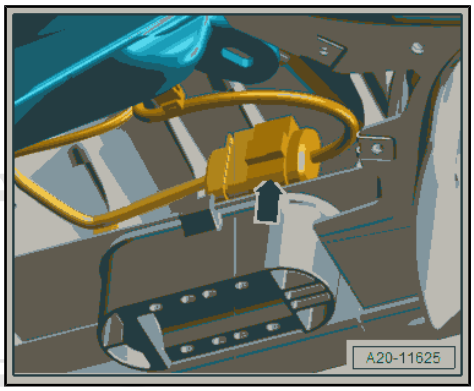

– Attach the -T40173- to the -VAS6931- and position it to support the fuel tank, as shown.

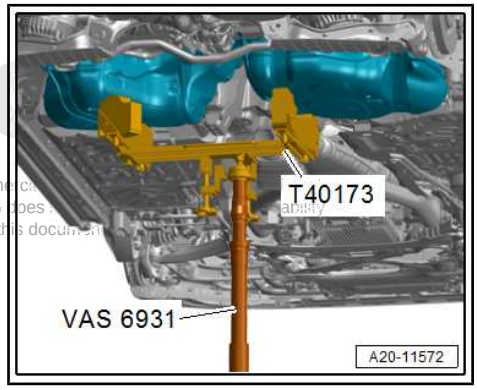

Protected by copyright. Copying for private or commercial purposes, in part, is not permitted unless authorised by AUDI AG. AUDI AG does not guarantee or accept any liability with respect to the correctness of information in this document.

cardiagn.com

– Remove the bolts -1 through 7-. (Shown without the engine and transmission jack.)

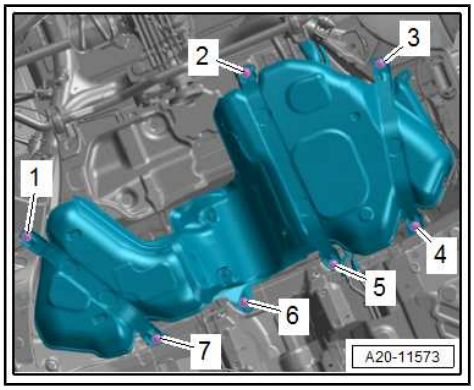

Protected by copyright. Copying for private or commercial purposes, in part or in whole, is not permitted unless authorised by AUDI AG. AUDI AG does not guarantee or accept any liability with respect to the correctness of information in this document. Copyright by AUDI AG.

– Lower the fuel tank 70 mm using the -VAS6931-.

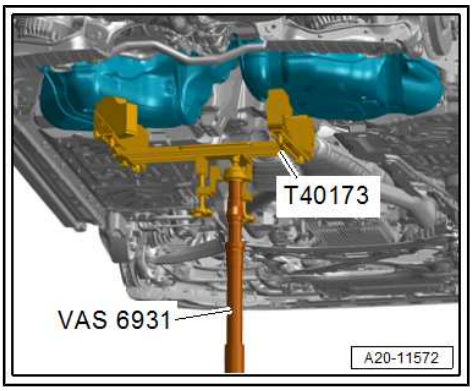

cardiagn.com

– Remove the nuts -arrows-.

– Remove the wiring channel -1-, free up the high-voltage cable set and remove toward the front. (Shown with the fuel tank removed).

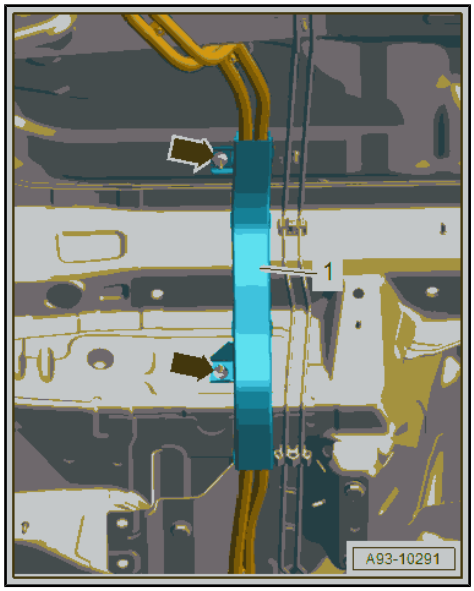

Installing

Install in reverse order of removal and note the following:

– Install the fuel tank. Refer to ⇒ Fuel Supply System; Rep. Gr. 20 ; Fuel Tank; Fuel Tank, Removing and Installing .

WARNING

Extremely dangerous due to high-voltage.

Severe bodily injury or death by electrocution is possible.

– Have a qualified person put the high-voltage system back into service.

– Re-energize the high-voltage system. Refer to ⇒ “8 High-Voltage System, Re-Energizing”, page 366 .

Tightening Specifications

- Refer to ⇒ “6.1 Component Location Overview - High-Voltage Cables”, page 342 .
- Refer to ⇒ “1.1 Overview - Muffler”, page 256
- Refer to ⇒ 8-Speed Automatic Transmission; Rep. Gr. 37 ; Subframe Mount; Overview - Subframe Mount .
- Refer to ⇒ Rear Final Drive; Rep. Gr. 39 ; Driveshaft; Overview - Driveshaft .
- Refer to ⇒ Suspension, Wheels, Steering; Rep. Gr. 40 ; Subframe; Overview - Subframe .
- Refer to ⇒ Body Exterior; Rep. Gr. 66 ; Underbody Trim Panel; Overview - Underbody Trim Panels .
- Refer to ⇒ Body Exterior; Rep. Gr. 66 ; Underbody Trim Panel; Overview - Diagonal Braces .
- Refer to ⇒ Body Exterior; Rep. Gr. 66 ; Molding/Trim/Extensions/Trim Panels; Overview - Heat Shield .
- Refer to ⇒ Body Interior; Rep. Gr. 70 ; Luggage Compartment Trim Panels; Overview - Luggage Compartment Floor .

6.3 Drive Motor High-Voltage Wiring Harness, Removing and Installing

Removing

DANGER

Extremely dangerous due to high-voltage.

Electrocution can cause death or very serious personal injury.

– Have the high-voltage system de-energized by a qualified person.

– De-energize the high-voltage system. Refer to ⇒ “7 High-Voltage System, De-Energizing”, page 364 .

– Remove the tunnel crossmember. Refer to ⇒ 8-Speed Automatic Transmission; Rep. Gr. 37 ; Subframe Mount; Overview - Subframe Mount .

Audi
Protected by copyright. Copying for private or commercial purposes, in part or in whole, is not permitted unless authorised by AUDI AG. AUDI AG does not guarantee or accept any liability with respect to the correctness of information in this document. Copyright by AUDI AG.
cardiagn.com

– Remove the subframe crossbrace. Refer to ⇒ Suspension, Wheels, Steering; Rep. Gr. 40 ; Subframe; Subframe Crossbrace, Removing and Installing .
– Free up the ATF lines and coolant hose.
– Remove the nut -2-.
– Free up the wiring harness -3-.
– Remove the bolts -arrows-.
– Remove the Drive Motor High-Voltage Wiring Harness - PX2- -4-.
– Release and remove the Electrical A/C Compressor High-Voltage Cable - P3- -1-.

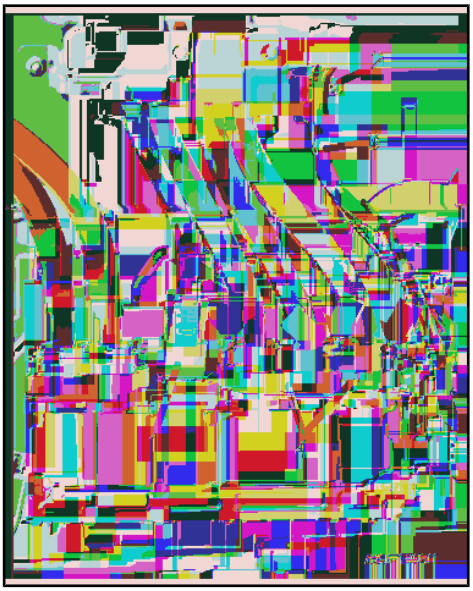

– To do so remove the connector lock -3- in direction of -arrow A-.
– Press the release -4- in the direction of -arrow B- and remove the connector -1- approximately 5 mm up to the next release level.
– Press the release -5- in the direction of -arrow D- and remove the connector from the connector mount -2- in the direction of -arrow C-.
– Cut the cable tie.

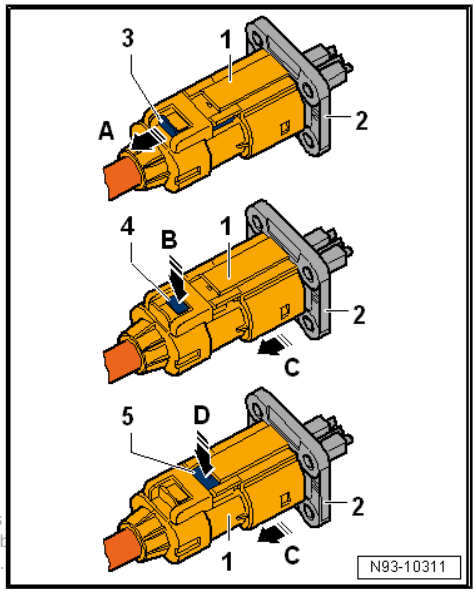

Protected by copyright. Copying for private or commercial purposes, in part or in whole, is permitted unless authorised by AUDI AG. AUDI AG does not guarantee or accept any liab with respect to the correctness of information in this document. Copyright by AUDI AG.

cardiagn.com

– Remove the nuts -arrows-, clamping strips -1 and 2- and the wiring channel -3-.

– Remove the bolts -arrows-.
– Remove the cover -1-.

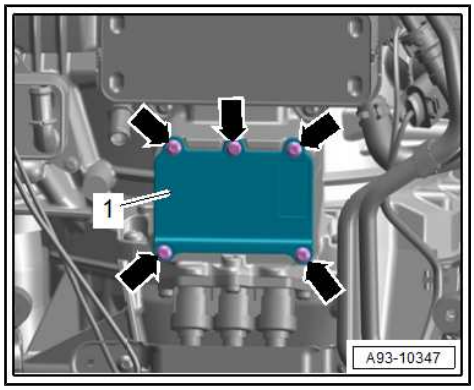

– Remove the bolts -arrows-.
– Free up the wiring harness -1 and 2-.

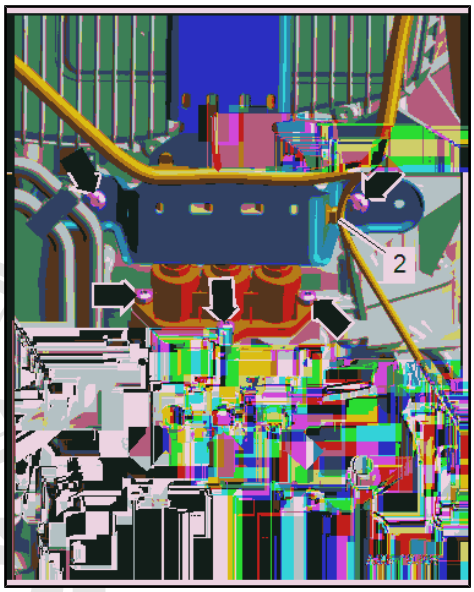

cardiagn.com

Protected by copyright. Copying for private or commercial purposes, in part or in whole, is not permitted unless authorised by AUDI AG. AUDI AG does not guarantee or accept any liability with respect to the correctness of information in this document. Copyright by AUDI AG.

– Remove the bolts -arrows-.
– Remove the wiring channel -1- at the same time remove the high-voltage cable set from the drive motor.
– Free up the high-voltage cable set from the wiring channel.

Installing

Install in reverse order of removal and note the following:

– Check the seals -arrows- on the Drive Motor High-Voltage Wiring Harness - PX2- for damage and if faulty replace.
– Check the contact surface for debris/corrosion and if required clean.

Protected by copyright. Copying for private or commer
permitted unless authorised by AUDI AG. AUDI AG d
with respect to the correctness of information in thi

cardiagn.com

– Check the housing sealing surface -1- for damage/corrosion.
– Check, if the adapter -arrows- are installed; if an adapter is missing replace it.
– Replace the cover -2- after removal.
– Install the cover with 188 00 102 PB - Silicone Grease- and tighten the bolts.
– Spray the seam between the cover and housing for the Three-Phase Current Drive - VX54- all around with Conservation Wax - D 308 SP5 A1-

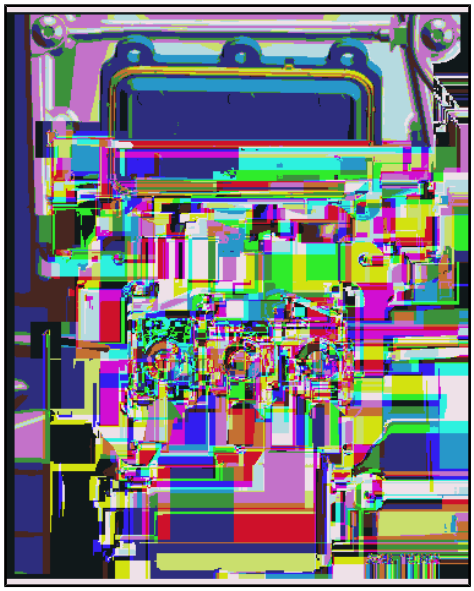

WARNING

Extremely dangerous due to high-voltage.

Severe bodily injury or death by electrocution is possible.

– Have a qualified person put the high-voltage system back into service.

– Re-energize the high-voltage system. Refer to ⇒ “8 High-Voltage System, Re-Energizing”, page 366 .

Tightening Specifications

♦ Refer to ⇒ “6.1 Component Location Overview - High-Voltage Cables”, page 342
♦ Refer to ⇒ Fig. ““Drive Motor Cover - Tightening Specification and Sequence”“ , page 347
♦ Refer to ⇒ 8-Speed Automatic Transmission; Rep. Gr. 37 ; Subframe Mount; Overview - Subframe Mount .
♦ Refer to ⇒ Suspension, Wheels, Steering; Rep. Gr. 40 ; Subframe; Overview - Subframe .

6.4 Electrical A/C Compressor High-Voltage Cable, Removing and Installing

Removing

DANGER

Extremely dangerous due to high-voltage.

Electrocution can cause death or very serious personal injury.

– Have the high-voltage system de-energized by a qualified person.

– De-energize the high-voltage system. Refer to ⇒ “7 High-Voltage System, De-Energizing”, page 364 .
– Remove the left engine support. Refer to ⇒ “1.7 Engine Support, Removing and Installing”, page 94 .
– Remove the left transmission mount. Refer to ⇒ “2.5.5 Transmission Mount, Removing and Installing, Left Transmission Mount for Vehicles with High-Voltage System”, page 74 .
– Remove the tunnel crossmember. Refer to ⇒ 8-Speed Automatic Transmission; Rep. Gr. 37 ; Subframe Mount; Overview - Subframe Mount .
– Cut the cable tie.

Protected by copyright. Copying for private or commercial purposes, in part or in whole, is not permitted unless authorised by AUDI AG. AUDI AG does not guarantee or accept any liability with respect to the correctness of information in this document. Copyright by AUDI AG.

cardiagn.com

– Remove the nuts -arrows-, clamping strips -1 and 2- and the wiring channel -3-.

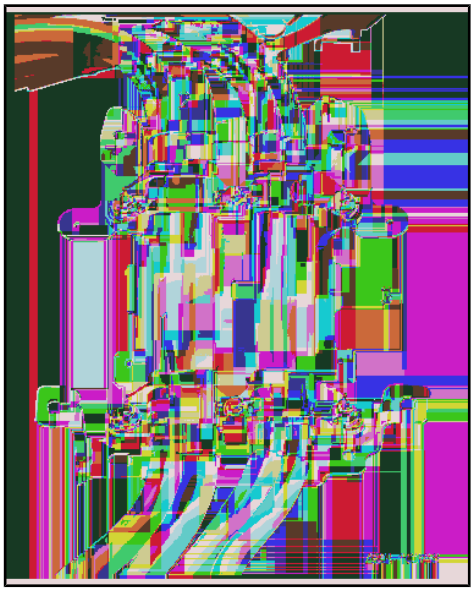

– Release and remove the Electrical A/C Compressor High-Voltage Cable - P3- -2- on the A/C compressor -3- and on the electric drive power and control electronics -1-.

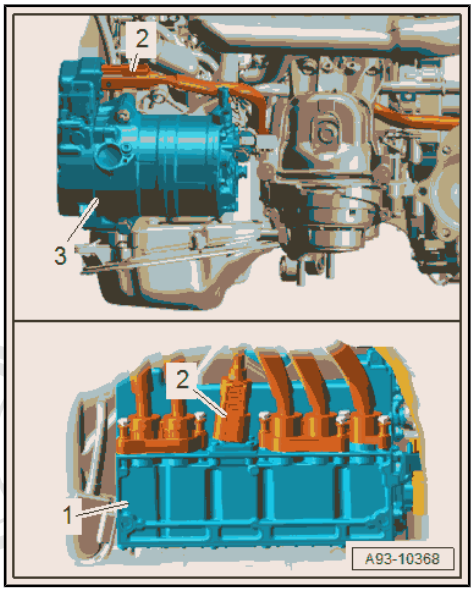

– To do so remove the connector lock -3- in the direction of -arrow A-.
– Press the release -4- in the direction of -arrow B- and remove the connector -1- approximately 5 mm up to the next release level.
– Press the release -5- in the direction of -arrow D- and remove the connector from the connector mount -2- in the direction of -arrow C-.

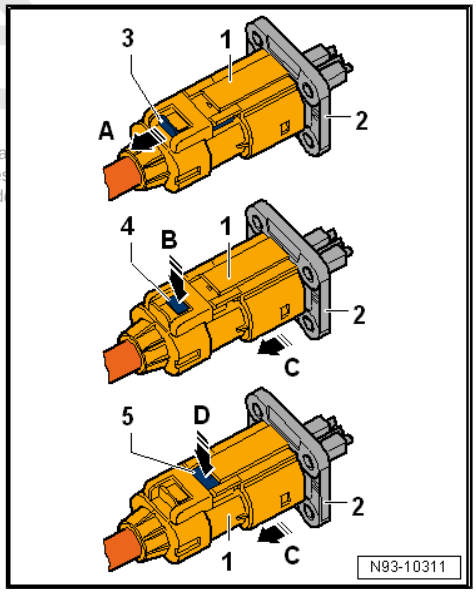

Protected by copyright. Copying for private or commercia
permitted unless authorised by AUDI AG. AUDI AG does
for the correctness of information in this d
cardiagn.com

– Remove the bolts -arrows-.
– Move the wiring channel -1- slightly to the side.

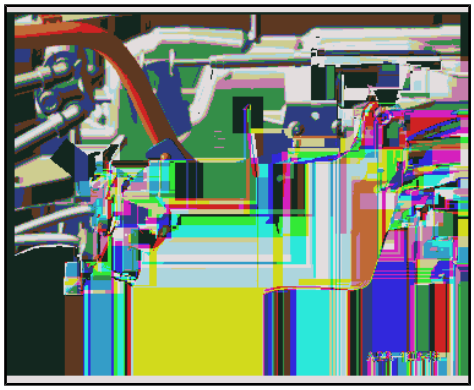

– Remove the bolts -arrows-.
– Free up and remove the Electrical A/C Compressor High-Voltage Cable - P3- .

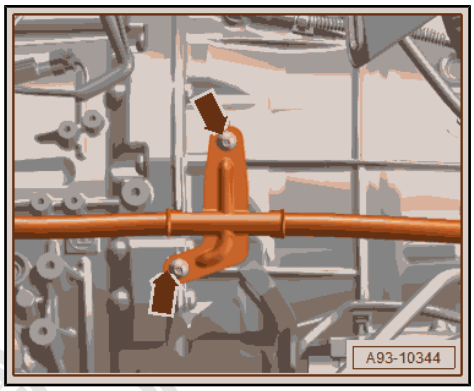

Installing

Install in reverse order of removal and note the following:

WARNING

Extremely dangerous due to high-voltage.
Severe bodily injury or death by electrocution is possible.
– Have a qualified person put the high-voltage system back into service.

– Re-energize the high-voltage system. Refer to ⇒ “8 High-Voltage System, Re-Energizing”, page 366 .

Tightening Specifications

- Refer to ⇒ “6.1 Component Location Overview - High-Voltage Cables”, page 342
- Refer to ⇒ “2.1 Overview - Subframe Mount”, page 61
- Refer to ⇒ 8-Speed Automatic Transmission; Rep. Gr. 37 ; Subframe Mount; Overview - Subframe Mount .

Protected by copyright. Copying for private or commercial purposes, in part or in whole, is not permitted unless authorised by AUDI AG. AUDI AG does not guarantee or accept any liability with respect to the correctness of information in this document. Copyright by AUDI AG.

6.5 High-Voltage Cable for High-Voltage Heater (PTC), Removing and Installing

Special tools and workshop equipment required

- Pry Lever - 80-200-
- Engine and Gearbox Jack - VAS6931-
- Gearbox Support - T40173-

Removing

DANGER

Extremely dangerous due to high-voltage.
Electrocution can cause death or very serious personal injury.
– Have the high-voltage system de-energized by a qualified person.

– De-energize the high-voltage system. Refer to ⇒ “7 High-Voltage System, De-Energizing”, page 364 .

cardiagn.com

– Remove the plenum chamber cover. Refer to ⇒ Body Exterior; Rep. Gr. 50 ; Bulkhead; Plenum Chamber Cover, Removing and Installing .
– Push the grommet -1- toward the outside.
– Free up the High-Voltage Cable for High-Voltage Heater (PTC) - P11- -2- release and remove.

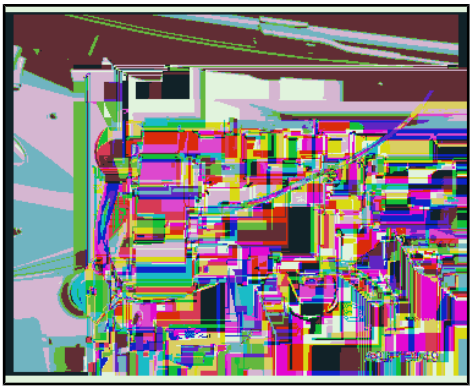

– To do so remove the connector lock -3- in direction of -arrow A-.
– Press the release -4- in the direction of -arrow B- and remove the connector -1- approximately 5 mm up to the next release level.
– Press the release -5- in the direction of -arrow D- and remove the connector from the connector mount -2- -arrow C-.
– Equipped on some models: remove the wheel blocker cover. Refer to ⇒ Body Exterior; Rep. Gr. 50 ; Fender; Wheel Blocker Cover, Removing and Installing .

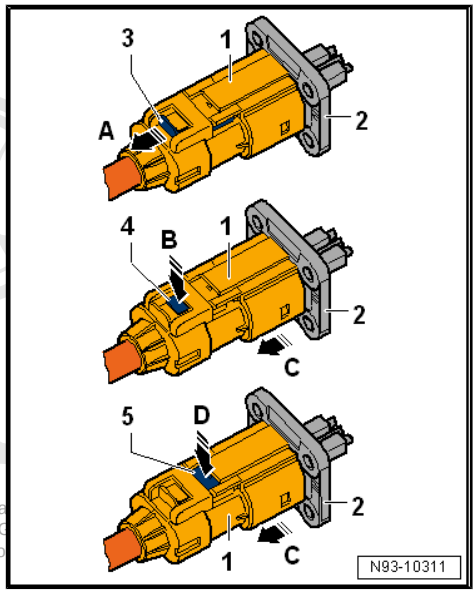

Protected by copyright. Copying for priva
permitted unless authorised by AUDI AG
with respect to the correctness of info

– Remove the nuts -arrows- and the cover -1-.
– Free up the high-voltage cable in the wheel housing and guide out of the plenum chamber.
– Remove the front and rear underbody trim panel. Refer to ⇒ Body Exterior; Rep. Gr. 66 ; Underbody Trim Panel; Underbody Trim Panels, Removing and Installing .
– Remove the right impact guard. Refer to ⇒ Body Exterior; Rep. Gr. 66 ; Underbody Trim Panel; Impact Guard, Removing and Installing .
– Remove the left heat shield for the rear tunnel. Refer to ⇒ Body Exterior; Rep. Gr. 66 ; Molding/Trim/Extensions/Trim Panels; Floor Heat Shield, Removing and Installing .
– Free up the high-voltage cable.

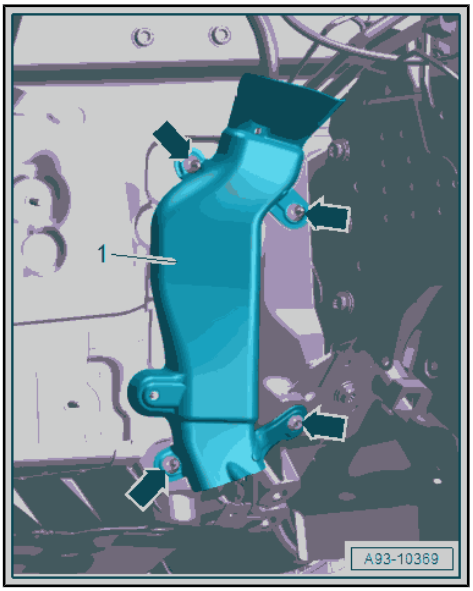

cardiagn.com

– Remove the nuts -arrows- and remove the wiring channel -2-.
– Free up the high-voltage cable -1- using the -80-200- .

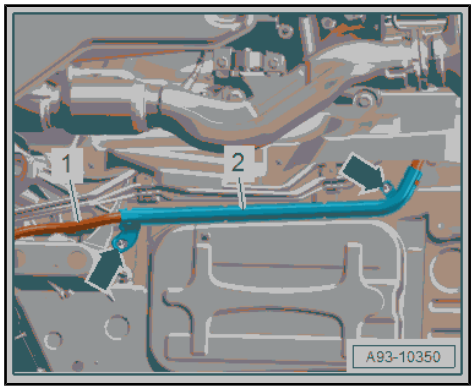

– Free up the High-Voltage Cable for High-Voltage Heater (PTC) - P11- -1- -arrows- release and remove.

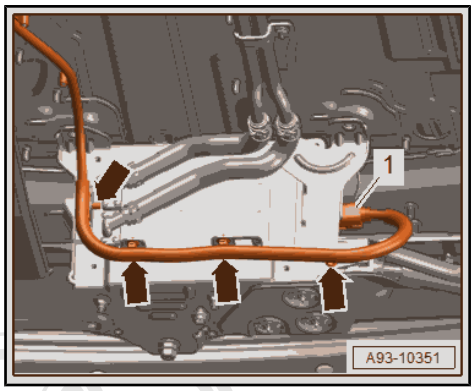

– To do so remove the connector lock -3- in direction of -arrow A-.
– Press the release -4- in the direction of -arrow B- and remove the connector -1- approximately 5 mm up to the next release level.
– Press the release -5- in the direction of -arrow D- and remove the connector from the connector mount -2- in the direction of -arrow C-.
– Lower the driveshaft center support. Refer to ⇒ Rear Final Drive; Rep. Gr. 39 ; Driveshaft; Driveshaft, Removing and Installing .
– Open the fuel filler door.
– Clean the area around the filler neck.

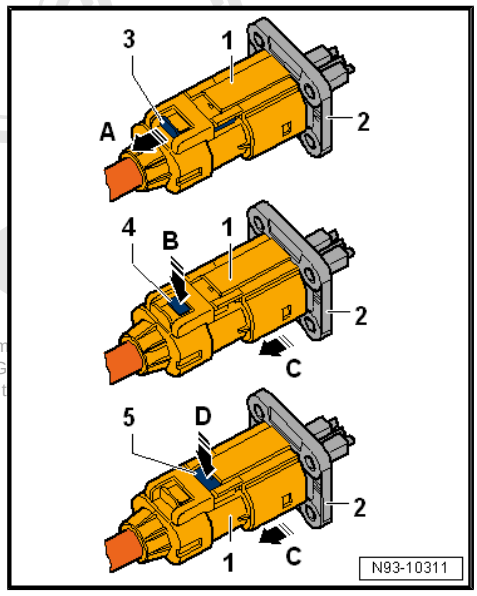

– Remove the fuel filler neck cap -arrow-.

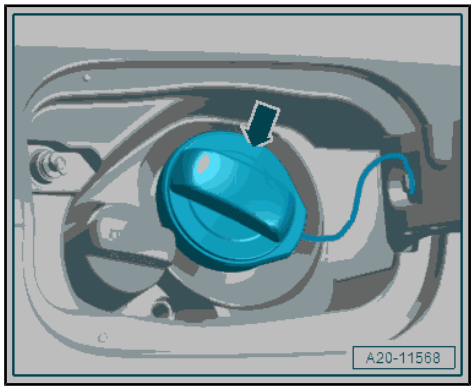

Protected by copyright. Copying for private or comm
permitted unless authorised by AUDI AG. AUDI AG
with respect to the correctness of information in t
cardiagn.com

– Remove the cap -arrow- for the reducing agent filler neck.

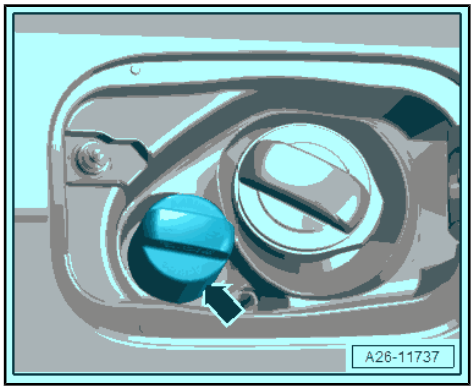

– Seal the fuel filler neck openings with a clean plug to prevent any dirt from getting in.

– Remove the right rear wheel housing liner. Refer to ⇒ Body Exterior; Rep. Gr. 66 ; Wheel Housing Liner; Rear Wheel Housing Liner, Removing and Installing .

– Remove the fuel filler door unit. Refer to ⇒ Body Exterior; Rep. Gr. 55 ; Fuel Filler Door Unit; Fuel Filler Door Unit, Removing and Installing .

– Remove the fuel filler neck bolts -2-.

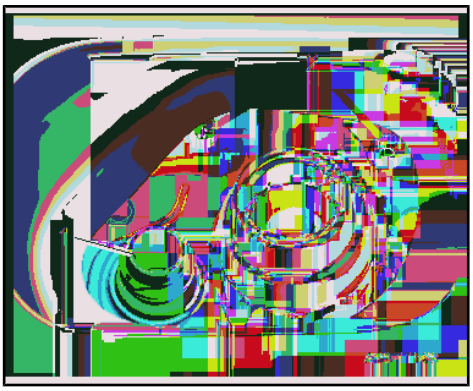

– Remove the nut -arrow- for the fuel filler neck.

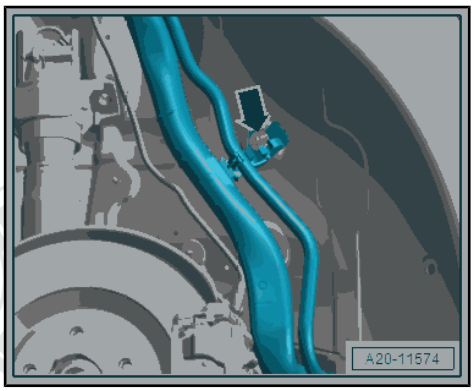

Market-Specific

– Disconnect the ground wire -2- from the fuel filler neck protective plate -1-.

– Remove the nut -arrow- for the fuel filler neck.

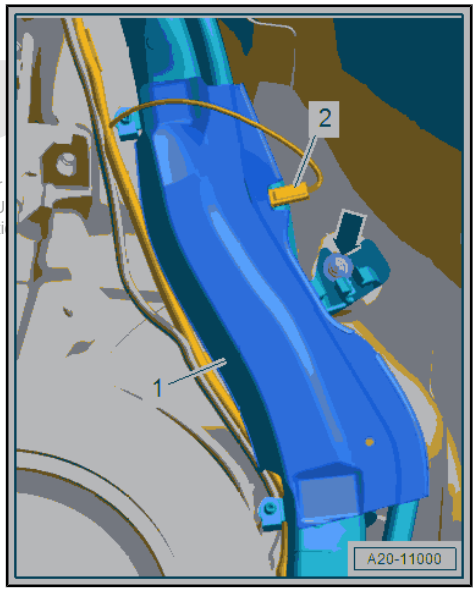

Protected by copyright. Copying for private or
permitted unless authorised by AUDI AG. AU
with respect to the correctness of informati

cardiagn.com

Continuation for All Vehicles

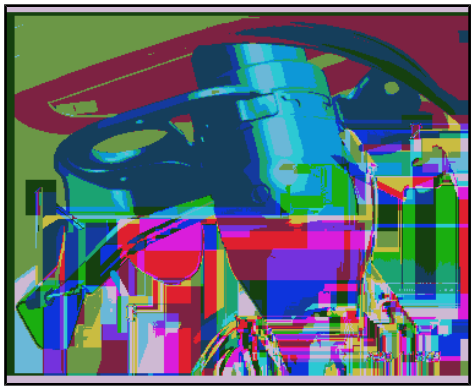

– Disengage the fuel filler neck -1- at the mount -3-.
– Remove the diagonal braces. Refer to ⇒ Body Exterior; Rep. Gr. 66 ; Underbody Trim Panel; Diagonal Braces, Removing and Installing .
– Remove the exhaust system rear section. Refer to ⇒ “1.3 Muffler, Removing and Installing”, page 263 .

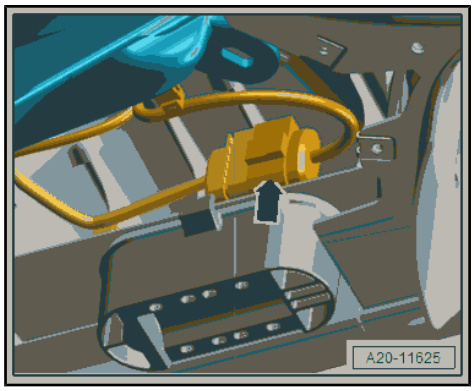

– Disconnect the connector -arrow- for the fuel delivery unit.

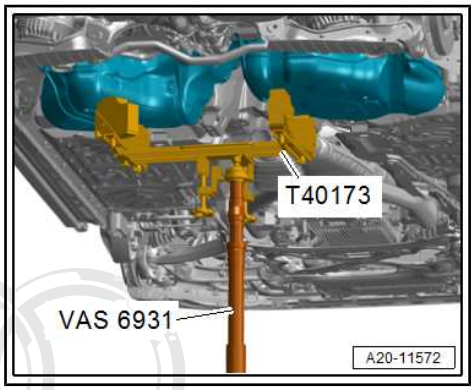

– Attach the -T40173- to the -VAS6931- and position it to support the fuel tank, as shown.

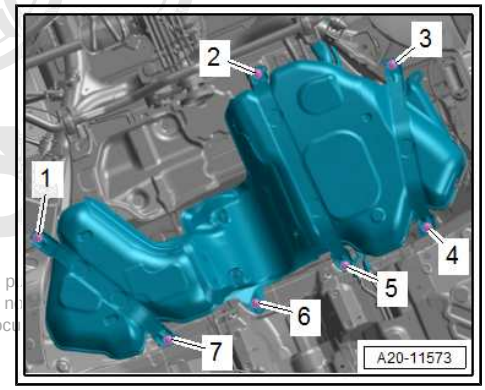

– Remove the bolts -1 through 7-. (Shown without the engine and transmission jack.)

Protected by copyright. Copying for private or commercial p
permitted unless authorised by AUDI AG. AUDI AG does n
with respect to the correctness of information in this doc

cardiagn.com

– Lower the fuel tank 70 mm using the -VAS6931- .

– Free up the high-voltage cable set using the -80-200- and remove toward the front.

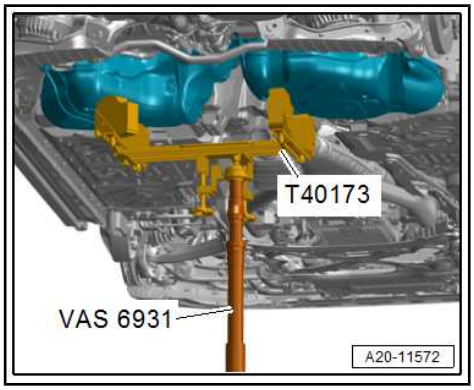

Installing

Install in reverse order of removal and note the following:

– Install the fuel tank. Refer to ⇒ Rep. Gr. 20 ; Fuel Tank; Fuel Tank, Removing and Installing .

– Install the plenum chamber cover. Refer to ⇒ Body Exterior; Rep. Gr. 50 ; Bulkhead; Plenum Chamber Cover, Removing and Installing .

WARNING

Extremely dangerous due to high-voltage.

Severe bodily injury or death by electrocution is possible.

– Have a qualified person put the high-voltage system back into service.

– Re-energize the high-voltage system. Refer to ⇒ “8 High-Voltage System, Re-Energizing”, page 366 .

Tightening Specifications

- Refer to ⇒ “6.1 Component Location Overview - High-Voltage Cables”, page 342
- Refer to ⇒ “1.1 Overview - Muffler”, page 256
- Refer to ⇒ Rear Final Drive; Rep. Gr. 39 ; Driveshaft; Overview - Driveshaft .
- Refer to ⇒ Body Exterior; Rep. Gr. 50 ; Fender; Overview - Fender .
- Refer to ⇒ Body Exterior; Rep. Gr. 66 ; Underbody Trim Panel; Overview - Underbody Trim Panels .
- Refer to ⇒ Body Exterior; Rep. Gr. 66 ; Molding/Trim/Extensions/Trim Panels; Overview - Heat Shield .
- Refer to ⇒ Body Exterior; Rep. Gr. 66 ; Underbody Trim Panel; Overview - Underbody Trim Panels .
- Refer to ⇒ Body Exterior; Rep. Gr. 66 ; Underbody Trim Panel; Overview - Diagonal Braces .

Protected by copyright. Copying for private or commercial purposes, in part or in whole, is not permitted unless authorised by AUDI AG. AUDI AG does not guarantee or accept any liability with respect to the correctness of information in this document. Copyright by AUDI AG.

cardiagn.com

7 High-Voltage System, De-Energizing

Special tools and workshop equipment required

- Test Adapter - Hybrid Module - VAS6558A-
- Warning Sign - High Voltage - VAS6649-
- Warning Sign - Switch - VAS6650A-
- Service Disconnect Lock - T40262/1-
- Vehicle Diagnostic Tester

Protected by copyright. Copying for private or commercial purposes, in part or in whole, is not permitted unless authorised by AUDI AG. AUDI AG does not guarantee or accept any liability with respect to the correctness of information in this document. Copyright by AUDI AG.

Procedure

De-energizing the high-voltage system is done exclusively via the Diagnosis mode. Refer to Vehicle Diagnostic Tester .

DANGER

Extremely dangerous due to high-voltage.

Electrocution can cause death or very serious personal injury.

– Have the high-voltage system de-energized by a qualified person.

De-energizing the high-voltage system:

– Connect the Vehicle Diagnostic Tester .

– Select the Diagnostic mode and start the diagnosis.

– Select the Test plan tab.

– Select the Select individual test button and select the following tree structure consecutively:

- Body
- Electrical system
- 01 - OBD-capable systems
- 51 - Electrical Drive Control Module - J841
- 51 - Electrical Drive Control Module, Functions
- 51 - De-energizing

DANGER

Extremely dangerous due to high-voltage.

Electrocution can cause death or very serious personal injury.

– Wear ESD safe clothing.

– Wear an insulated helmet with face protection.

– Wear safety gloves.

– Wear protective footwear.

- If the protection against contact on the high-voltage components is removed, an extra voltage measurement procedure is required. Refer to ⇒ “7 High-Voltage System, De-Energizing”, page 364 .

– The prompt to disconnect the High-Voltage System Maintenance Connector - TW- will appear over the course of the program.

- The High-Voltage System Maintenance Connector - TW- is an electrical bridge between the contactors and the Hybrid Bat-

cardiagn.com

tery Unit - AX1- and is always disconnected when the high-voltage system must be de-energized.

High-Voltage System Maintenance Connector - TW- , Disconnecting

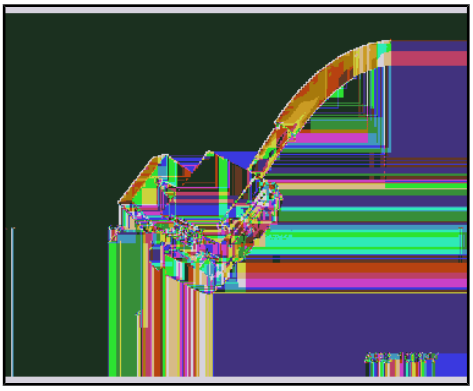

– Remove the left headlamp cover. Refer to ⇒ Body Exterior; Rep. Gr. 63 ; Front Bumper .

– Push the retainer -2- toward the rear, push the release downward and remove the High-Voltage System Maintenance Connector - TW- -1- until it stops.

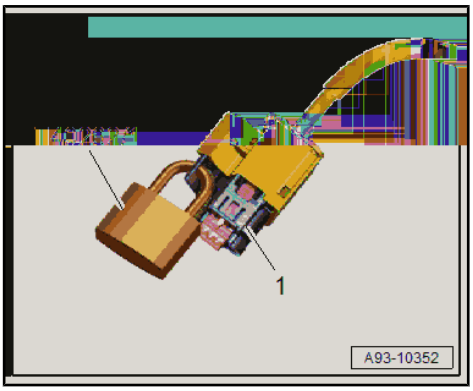

– Secure the High-Voltage System Maintenance Connector - TW- -1- with the -T40262/1- .

• If the High-Voltage System Maintenance Connector - TW- is disconnected, the connection for the conductors is disconnected and the residual voltage in the high-voltage system reduces. The high-voltage system is then de-energized.

Protected by copyright. Copying for private or commercial purposes, in part or in whole, is not permitted unless authorised by AUDI AG. AUDI AG does not guarantee or accept any liability with respect to the correctness of information in this document. Copyright by AUDI AG.

cardiagn.com

8 High-Voltage System, Re-Energizing

Special tools and workshop equipment required

- Vehicle Diagnostic Tester
- Service Disconnect Lock - T40262/1-

Procedure

Re-energizing the high-voltage system is done exclusively via the `Diagnosis` mode. Refer to Vehicle Diagnostic Tester .

DANGER

Extremely dangerous due to high-voltage.

Electrocution can cause death or very serious personal injury.

– **Have the high-voltage system de-energized by a qualified person.**

– Connect the Vehicle Diagnostic Tester .

– Select the `Diagnostic` mode and start the diagnosis.

– Select the `Test plan` tab.

– Select the `Select individual test` button and select the following tree structure consecutively:

- Body
- Electrical system
- 01 - OBD-capable systems
- 51 - Electrical Drive Control Module - J841
- 51 - Electrical Drive Control Module, Functions
- 51 - Re-energizing

– The prompt to connect the High-Voltage System Maintenance Connector - TW- will appear over the course of the program.

High-Voltage System Maintenance Connector - TW- , Connecting:

– Remove the - T40262/1- from the High-Voltage System Maintenance Connector - TW- -1-.

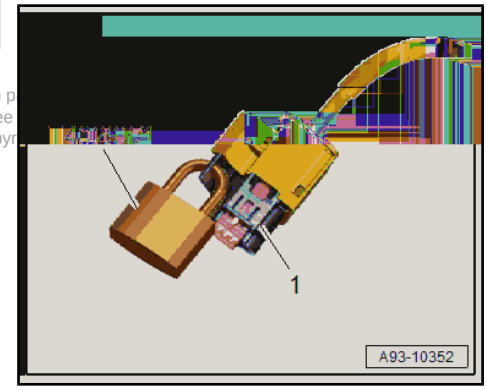

Protected by copyright. Copying for private or commercial purposes, in p
permitted unless authorised by AUDI AG. AUDI AG does not guarantee
with respect to the correctness of information in this document. Copyr

cardiagn.com

– Release the retainer -3- using a narrow screwdriver in the direction of -arrow A-.
– Push the release -2- downward in the direction of -arrow B- and push in the High-Voltage System Maintenance Connector - TW- -1- until it engages in direction of -arrow C-.

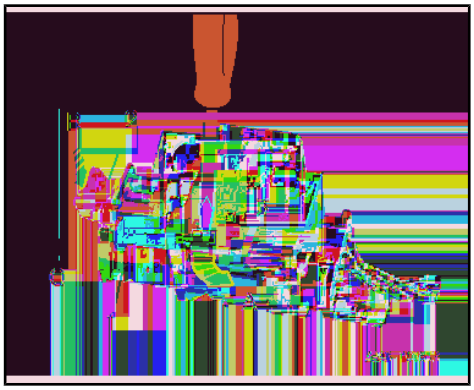

Protected by copyright. Copying for private or commercial purposes, in part or in whole, is not permitted unless authorised by AUDI AG. AUDI AG does not guarantee or accept any liability with respect to the correctness of information in this document. Copyright by AUDI AG.

cardiagn.com

9 Potential Equalization Cables

⇒ “9.1 General Information - Potential Equalization Cable”, page 368

⇒ “9.2 Component Location Overview - Potential Equalization Cables”, page 368

⇒ “9.3 Potential Equalization Cable, Removing and Installing”, page 369

9.1 General Information - Potential Equalization Cable

- Check the contact surfaces of the potential equalization cable before installing.
- The contact surfaces must be clean and free of rust and grease.
- Otherwise, clean the contact surfaces using the Contact Surface Cleaning Set - VAS6410- . Refer to ⇒ Electrical Equipment; Rep. Gr. 97 ; Contact Surfaces, Cleaning .

9.2 Component Location Overview - Potential Equalization Cables

1 - Electric Drive Power and Control Electronics - JX1-

2 - Nut

- ❑ 16 Nm

3 - Potential Equalization Cable

- ❑ For electric drive power and control electronics
- ❑ Removing and installing. Refer to ⇒ “9.3.1 Potential Equalization Cable, Removing and Installing, Electric Drive Power and Control Electronics”, page 369 .

4 - Bolt

- ❑ 17 Nm

5 - High-Voltage Heater (PTC) - Z115-

6 - Nut

- ❑ 9 Nm

7 - Potential Equalization Cable

- ❑ For high-voltage heater (PTC)
- ❑ Removing and installing. Refer to ⇒ “9.3.4 Potential Equalization Cable, Removing and Installing, High-Voltage Heater (PTC)”, page 371 .

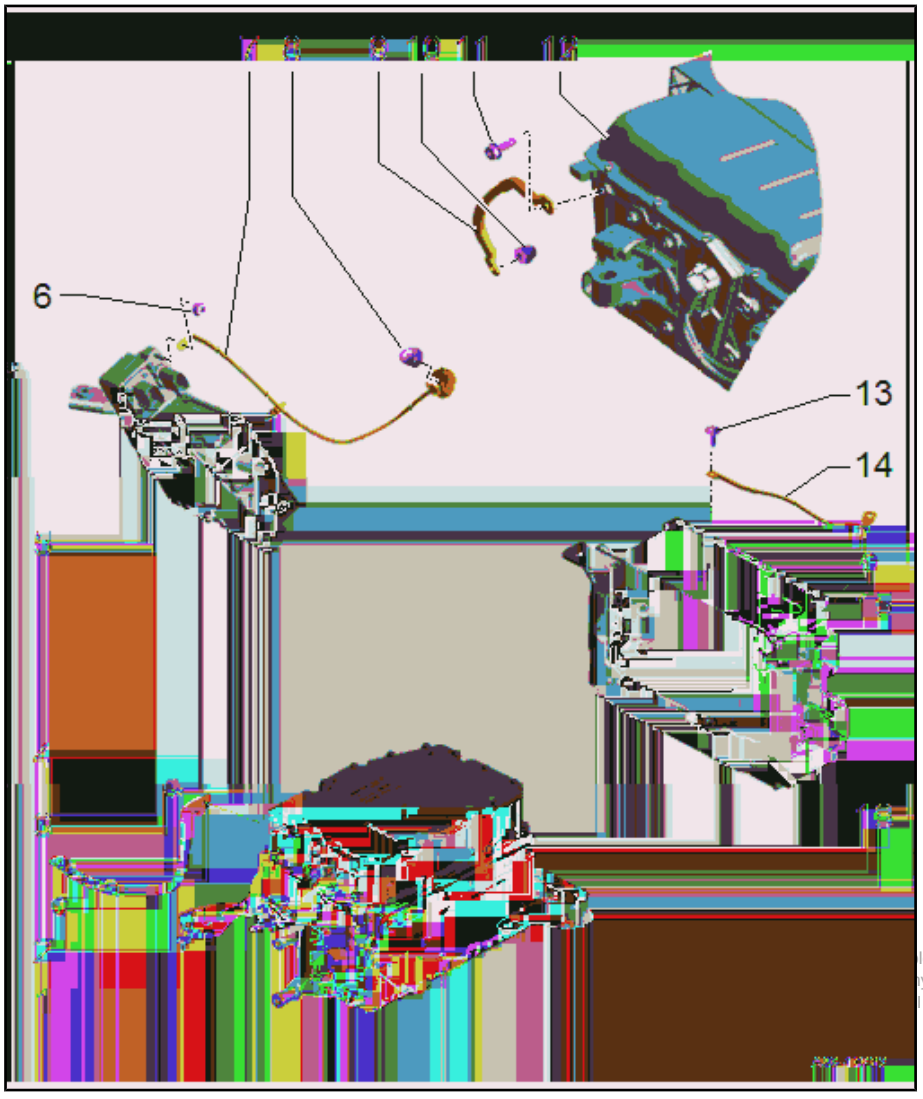

cardiagn.com

le, is not
y liability
l AG.

8 - Nut

- ❑ 9 Nm

9 - Potential Equalization Cable

- ❑ For hybrid battery unit
- ❑ Removing and installing. Refer to
  ⇒ “9.3.2 Potential Equalization Cable, Removing and Installing, High-Voltage Battery Unit”, page 370 .

10 - Nut

- ❑ 9 Nm

11 - Bolt

- ❑ 20 Nm

12 - Hybrid Battery Unit - AX1-

13 - Bolt

- ❑ 9 Nm

Protected by copyright. Copying for private or commercial purposes, in part or in whole, is not permitted unless authorised by AUDI AG. AUDI AG does not guarantee or accept any liability with respect to the correctness of information in this document. Copyright by AUDI AG.

14 - Potential Equalization Cable

- ❑ For the High-Voltage Battery Charger 1
- ❑ Removing and installing. Refer to
  ⇒ “9.3.3 Potential Equalization Cable, Removing and Installing, High-Voltage Battery Charger 1”, page 371 .

15 - Nut

- ❑ 17 Nm

16 - High-Voltage Battery Charger 1 - AX4-

- ❑ With High-Voltage Battery Charger Control Module - J1050-

9.3 Potential Equalization Cable, Removing and Installing

⇒ “9.3.1 Potential Equalization Cable, Removing and Installing, Electric Drive Power and Control Electronics”, page 369

⇒ “9.3.2 Potential Equalization Cable, Removing and Installing, High-Voltage Battery Unit”, page 370

⇒ “9.3.3 Potential Equalization Cable, Removing and Installing, High-Voltage Battery Charger 1”, page 371

⇒ “9.3.4 Potential Equalization Cable, Removing and Installing, High-Voltage Heater (PTC)”, page 371

9.3.1 Potential Equalization Cable, Removing and Installing, Electric Drive Power and Control Electronics

Removing

– Remove the electric drive power and control electronics. Refer to
  ⇒ “4.2 Electric Drive Power and Control Electronics, Removing and Installing”, page 323 .

cardiagn.com

– Remove the bolt -arrow-.

– Free up and remove the potential equalization cable -1-.

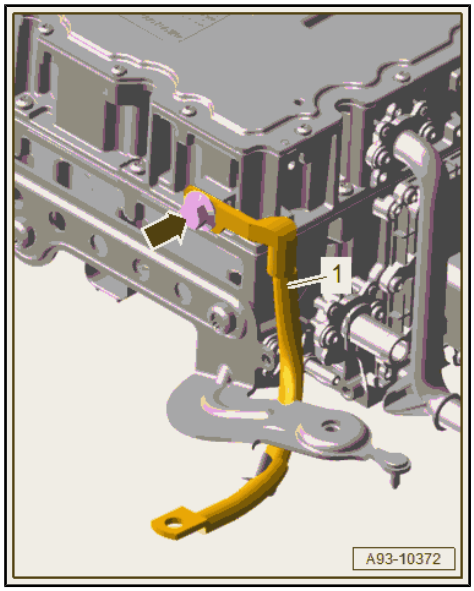

Installing

Install in reverse order of removal and note the following:

– Install the electric drive power and control electronics. Refer to
⇒ “4.2 Electric Drive Power and Control Electronics, Removing and Installing”, page 323 .

Tightening Specifications

♦ Refer to
⇒ “9.2 Component Location Overview - Potential Equalization Cables”, page 368

9.3.2 Potential Equalization Cable, Removing and Installing, High-Voltage Battery Unit

Removing

DANGER

Extremely dangerous due to high-voltage.

Electrocution can cause death or very serious personal injury.

– Have the high-voltage system de-energized by a qualified person.

– De-energize the high-voltage system. Refer to
⇒ “7 High-Voltage System, De-Energizing”, page 364 .

– Remove the luggage compartment floor. Refer to ⇒ Body Interior; Rep. Gr. 70 ; Luggage Compartment Trim Panels; Luggage Compartment Floor, Removing and Installing .

– Remove the bolt -3- and the nut -1-.

– Remove the potential equalization cable -2-.

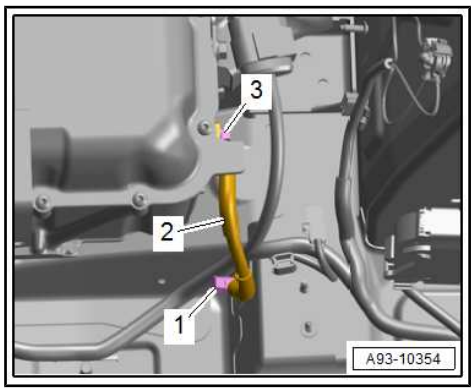

Installing

Install in reverse order of removal and note the following:

WARNING

Extremely dangerous due to high-voltage.

Severe bodily injury or death by electrocution is possible.

– Have a qualified person put the high-voltage system back into service.

– Re-energize the high-voltage system. Refer to
⇒ “8 High-Voltage System, Re-Energizing”, page 366 .

Tightening Specifications

♦ Refer to
⇒ “9.2 Component Location Overview - Potential Equalization Cables”, page 368

♦ Refer to ⇒ Body Interior; Rep. Gr. 70 ; Luggage Compartment Trim Panels; Overview - Luggage Compartment Floor .

Protected by copyright. Copying for private or commercial purposes, in part or in whole, is not permitted unless authorised by AUDI AG. AUDI AG does not guarantee or accept any liability with respect to the correctness of information in this document. Copyright by AUDI AG.

cardiagn.com

9.3.3 Potential Equalization Cable, Removing and Installing, High-Voltage Battery Charger 1

Removing

– Remove the high-voltage battery charger 1. Refer to ⇒ “11.2 High-Voltage Battery Charger 1 AX4 , Removing and Installing”, page 381 .

– Remove the bolt -arrow-.

– Remove the potential equalization cable -1-.

Installing

Install in reverse order of removal and note the following:

– Install the high-voltage battery charger 1. Refer to ⇒ “11.2 High-Voltage Battery Charger 1 AX4 , Removing and Installing”, page 381 .

Tightening Specifications

♦ Refer to ⇒ “9.2 Component Location Overview - Potential Equalization Cables”, page 368

9.3.4 Potential Equalization Cable, Removing and Installing, High-Voltage Heater (PTC)

Removing

DANGER

Extremely dangerous due to high-voltage.

Electrocution can cause death or very serious personal injury.

– Have the high-voltage system de-energized by a qualified person.

– De-energize the high-voltage system. Refer to ⇒ “7 High-Voltage System, De-Energizing”, page 364 .

– Remove the plenum chamber cover. Refer to ⇒ Body Exterior; Rep. Gr. 50 ; Bulkhead; Plenum Chamber Cover, Removing and Installing .

Protected by copyright. Copying for private or commercial purposes, in part or in whole, is not permitted unless authorised by AUDI AG. AUDI AG does not guarantee or accept any liability with respect to the correctness of information in this document. Copyright by AUDI AG.

cardiagn.com

– Remove the nuts -1 and 3-.
– Free up and remove the potential equalization cable -2-.

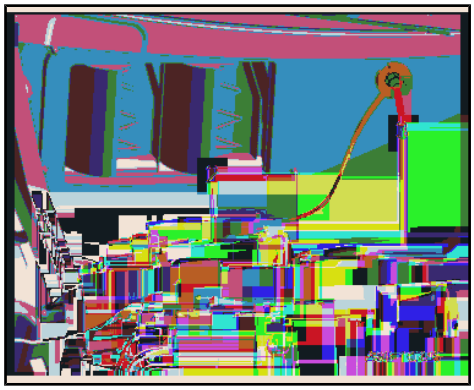

Installing

Install in reverse order of removal and note the following:

– Install the plenum chamber cover. Refer to ⇒ Body Exterior; Rep. Gr. 50 ; Bulkhead; Plenum Chamber Cover, Removing and Installing .

WARNING

Extremely dangerous due to high-voltage.

Severe bodily injury or death by electrocution is possible.

– Have a qualified person put the high-voltage system back into service.

– Re-energize the high-voltage system. Refer to ⇒ “8 High-Voltage System, Re-Energizing”, page 366 .

Tightening Specifications

♦ Refer to ⇒ “9.2 Component Location Overview - Potential Equalization Cables”, page 368

Protected by copyright. Copying for private or commercial purposes, in part or in whole, is not permitted unless authorised by AUDI AG. AUDI AG does not guarantee or accept any liability with respect to the correctness of information in this document. Copyright by AUDI AG.

cardiagn.com

10 Charging Socket

⇒ “10.1 Overview - Charging Socket”, page 373

⇒ “10.2 e-tron Charging System”, page 374

⇒ “10.3 USB Adapter for e-tron Charging System”, page 374

⇒ “10.4 High-Voltage Battery Charging Socket 1 UX4 , Removing and Installing”, page 375

⇒ “10.5 Battery Charging Button Module EX32 , Removing and Installing”, page 378

10.1 Overview - Charging Socket

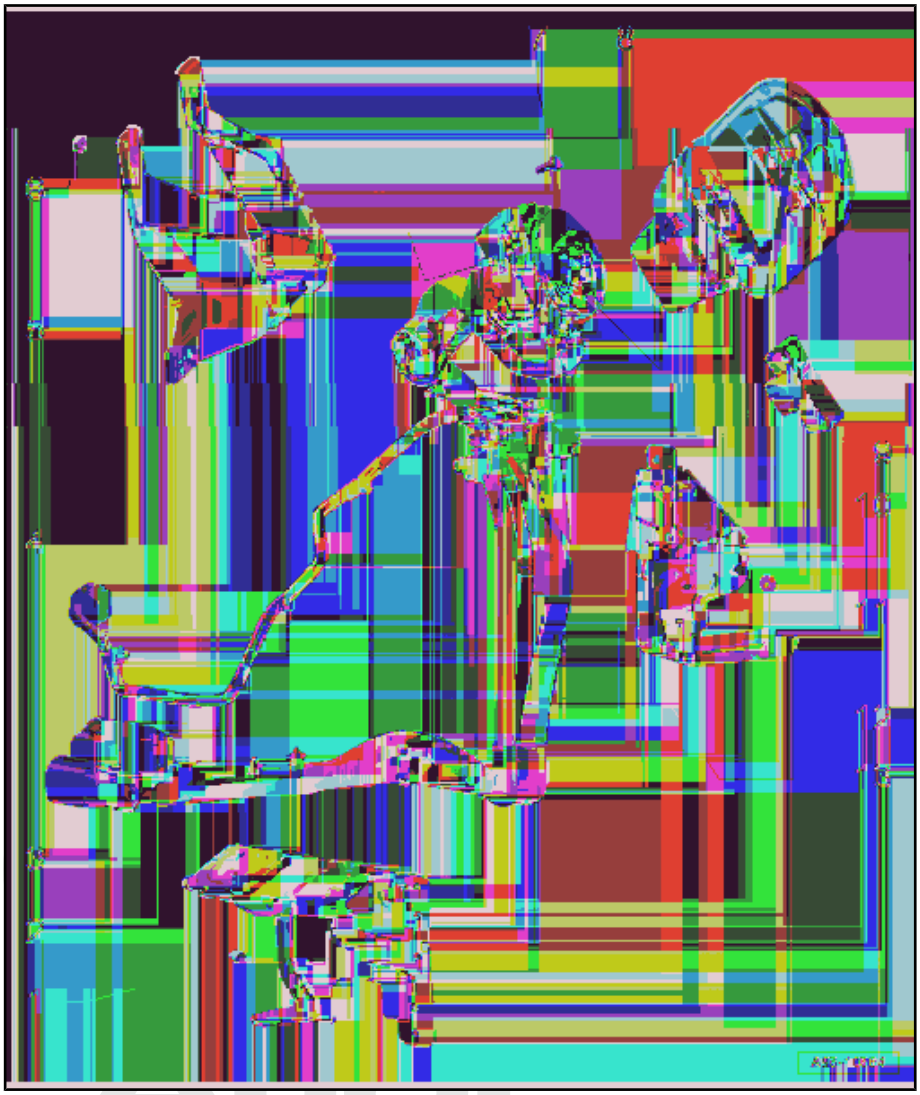

1 - Nut

- 3.5 Nm
- Quantity: 3

2 - Bracket

3 - High-Voltage Cables

- To the High-Voltage Battery Charger 1 - AX4-

4 - High-Voltage Cable

- To the High-Voltage Battery Switch Box - SX6-

5 - Mount

- For the High-Voltage Battery Charging Socket 1 - UX4-

6 - Nut

- 6 Nm
- Quantity: 4

7 - Bolt

- 9 Nm
- Quantity: 4

8 - Electrical Connection Charge Door Unit

- Removing and installing. Refer to ⇒ Body Exterior; Rep. Gr. 55 ; Charge Door Unit; Charge Door Unit, Removing and Installing .

9 - Battery Charging Button Module - EX32-

- With Charging Socket LED Module 1 - L263- , Immediate Charging Button - E766- , Charging Profile Selection Button - E808-
- Removing and installing. Refer to ⇒ “10.5 Battery Charging Button Module EX32 , Removing and Installing”, page 378 .

10 - High-Voltage Battery Charging Socket 1 - UX4-

- With High-Voltage Charging Connector Lock 1 Adjuster - F498- and Charging Socket Temperature Sensor 1 - G853-
- Removing and installing. Refer to ⇒ “10.4 High-Voltage Battery Charging Socket 1 UX4 , Removing and Installing”, page 375 .

Protected by copyright. Copying for private or commercial purposes, in part or in whole, is not permitted unless authorised by AUDI AG. AUDI AG does not guarantee or accept any liability with respect to the correctness of information in this document. Copyright by AUDI AG.

cardiagn.com

11 - Pass-Through

- ❑ Cannot be replaced separately

12 - Nut

- ❑ 3.5 Nm
- ❑ Quantity: 4

13 - Bracket

10.2 e-tron Charging System

The e-tron charging system consists of:

-1- = Charging cable with industrial connector

-2- = Charging cable with household connector

-3- = Display and control head

-4- = Charging cable with vehicle connector

Protected by copyright. Co is not permitted unless authorise liability with respect to the corre G.

10.3 USB Adapter for e-tron Charging System

Special tools and workshop equipment required

- ♦ USB Adapter for E-Tron Charger System - VAS681001-
- ♦ USB Cable (USB 2.0 Type A/B), for example USB Connection Cable - VAS611001-

Diagnostics, Starting, Audi CSI (Charging System Interface)

– Disconnect the display and control head from the power supply.

– Disconnect the charging cable for the side of the vehicle.

– Connect the -VAS681001-

– Connect the display and control head to the PC using a USB cable (USB 2.0 type A/B), for example -VAS611001- .

– Reconnect the display and control head with the power supply.

– The software is available from the importer and can be downloaded from Dealer Portal, for example.

– Start the application on the PC.

– Connect the display and control head to the PC by pressing the Connect button.

• Connection status = “green”

Possible Functions

- ♦ Resetting PIN
- ♦ Updating software
- ♦ Reading, displaying and if necessary, deleting the DTC memory

cardiagn.com

Keyboard Shortcuts

- F8 button = “Start/run command”
- F11 button = “Back”
- F12 button = “Next”
- Esc button = “End application”

Ending Diagnostics, Audi CSI (Charging System Interface)

– Press the Disconnect button to end the display and control head communication with the PC.

• Connection status = “red”

– Press the Esc button to end the application.

– Disconnect the display and control head from the power supply.

– Disconnect the USB Cable (USB 2.0 Type A/B), for example -VAS611001- from the PC.

– Disconnect the -VAS681001- .

– Connect the charging cable for the side of the vehicle.

– Reconnect the display and control head with the power supply.

10.4 High-Voltage Battery Charging Socket 1 - UX4- , Removing and Installing

Special tools and workshop equipment required

- Pry Lever - 80-200-

Removing

DANGER

Extremely dangerous due to high-voltage.

Electrocution can cause death or very serious personal injury.

– Have the high-voltage system de-energized by a qualified person.

– De-energize the high-voltage system. Refer to ⇒ “7 High-Voltage System, De-Energizing”, page 364 .

– Remove the luggage compartment left trim panel. Refer to ⇒ Body Interior; Rep. Gr. 70 ; Luggage Compartment Trim Panels; Luggage Compartment Side Trim Panel, Removing and Installing .

– Remove the left rear wheel housing liner. Refer to ⇒ Body Exterior; Rep. Gr. 66 ; Wheel Housing Liner; Rear Wheel Housing Liner, Removing and Installing .

Protected by copyright. Copying for private or commercial purposes, in part or in whole, is not permitted unless authorised by AUDI AG. AUDI AG does not guarantee or accept any liability with respect to the correctness of information in this document. Copyright by AUDI AG.

cardiagn.com

– Loosen the clamping washers -arrows-.
– Remove the heat shield -1-.

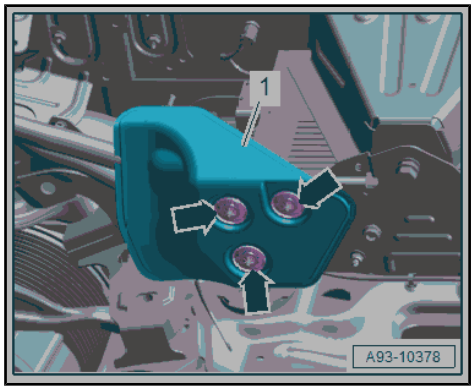

– Disconnect the connectors -2, 3 and 4-.

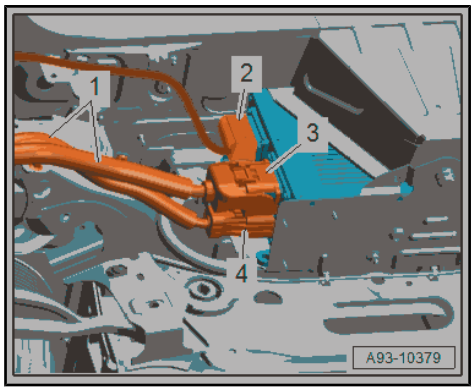

– Free up the high-voltage cable set -1- using the -80-200- .
– Release the catches -arrows- and guide out the pass-through -2- with the high-voltage cable set upward through the body opening.

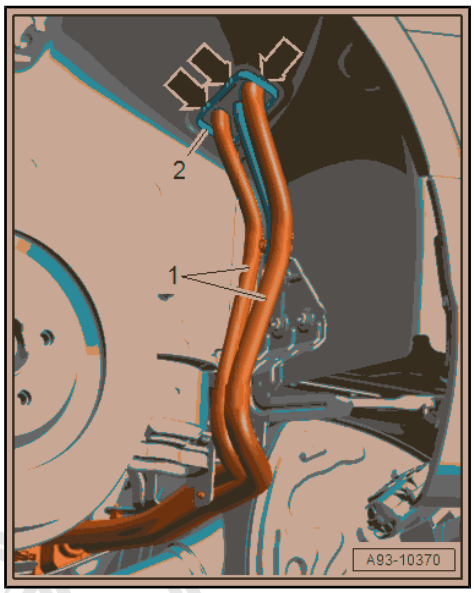

cardiagn.com

Protected by copyright. Copying for private or commercial purposes, in part or in whole, is not permitted unless authorised by AUDI AG. AUDI AG does not guarantee or accept any liability with respect to the correctness of information in this document. Copyright by AUDI AG.

– Release, remove and free up the High-Voltage Cable for High-Voltage Battery Charger - P25- -1-.

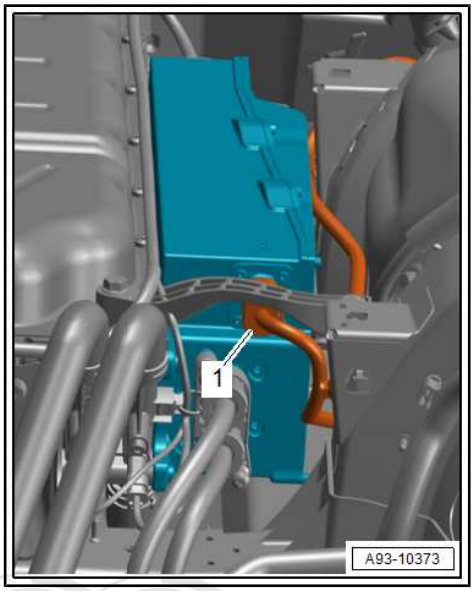

– To do so remove the connector lock -3- in the direction of -arrow A-.
– Press the release -4- in the direction of -arrow B- and remove the connector -1- approximately 5 mm up to the next release level.
– Press the release -5- in the direction of -arrow D- and remove the connector from the connector mount -2- in the direction of -arrow C-.

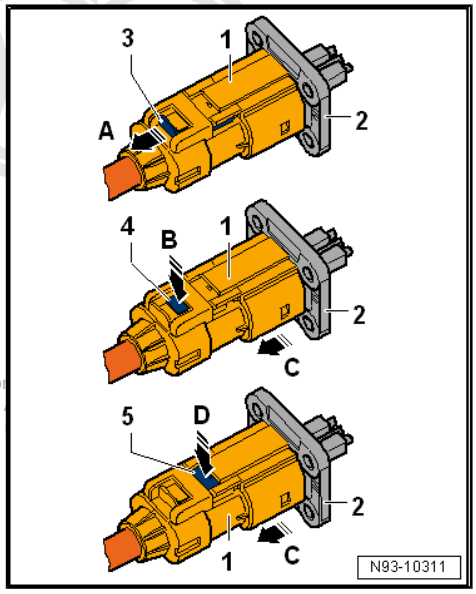

Protected by copyright. Copying for private or co
permitted unless authorised by AUDI AG. AUDI
with respect to the correctness of information

– Remove the nut -1-.
– Release the retainers -arrows-.
– Remove fuse panel F -2- to the right.

cardiagn.com

– Disconnect the connector -2- and free up the connector -3-.
– Remove the nuts -arrows-.
– Remove the cap on the charging socket.
– Remove the mount -1- with the charging socket toward the inside from the rubber boot.

– Remove the bolts -arrows-.
– Remove the mount -1- from the High-Voltage Battery Charging Socket 1 - UX4- -2-.

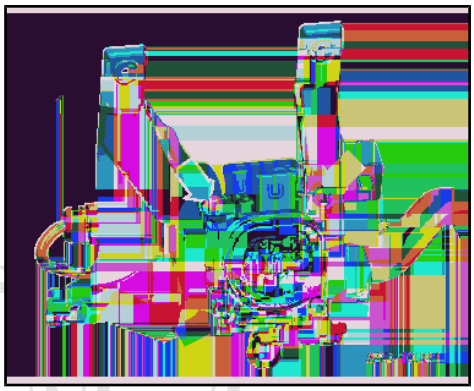

Installing

Install in reverse order of removal and note the following:

WARNING

Extremely dangerous due to high-voltage.

Severe bodily injury or death by electrocution is possible.

– **Have a qualified person put the high-voltage system back into service.**

– Re-energize the high-voltage system. Refer to ⇒ “8 High-Voltage System, Re-Energizing”, page 366 .

Tightening Specifications

- Refer to ⇒ “10.1 Overview - Charging Socket”, page 373
- Refer to ⇒ Body Exterior; Rep. Gr. 66 ; Wheel Housing Liner; Overview - Rear Wheel Housing Liner .
- Refer to ⇒ Body Interior; Rep. Gr. 70 ; Luggage Compartment Trim Panels; Overview - Luggage Compartment Side Trim Panel .
- Refer to ⇒ Electrical Equipment; Rep. Gr. 97 ; Relay Panels, Fuse Panels, E-Boxes; Component Location Overview - Relay Panels, Fuse Panels, E-Boxes .

10.5 Battery Charging Button Module - EX32- , Removing and Installing

Removing

– Remove the luggage compartment left trim panel. Refer to ⇒ Body Interior; Rep. Gr. 70 ; Luggage Compartment Trim Panels; Luggage Compartment Side Trim Panel, Removing and Installing .

Protected by copyright. Copying for private or commercial purposes, in part or in whole, is not permitted unless authorised by AUDI AG. AUDI AG does not guarantee or accept any liability with respect to the correctness of information in this document. Copyright by AUDI AG.

cardiagn.com

– Remove the nut -1-.
– Release the retainers in the direction of -arrows-.
– Remove fuse panel F -2- to the right.

Protected by copyright. Copying for private or commercial purposes, in part or in whole, is not permitted unless authorised by AUDI AG. AUDI AG does not guarantee or accept any liability with respect to the correctness of information in this document. Copyright by AUDI AG.

– Disconnect the connector -2-.
– Open the cover of the charge door unit.
– Pry out the Battery Charging Button Module - EX32- -1- from the mount in direction of -arrow- and remove.

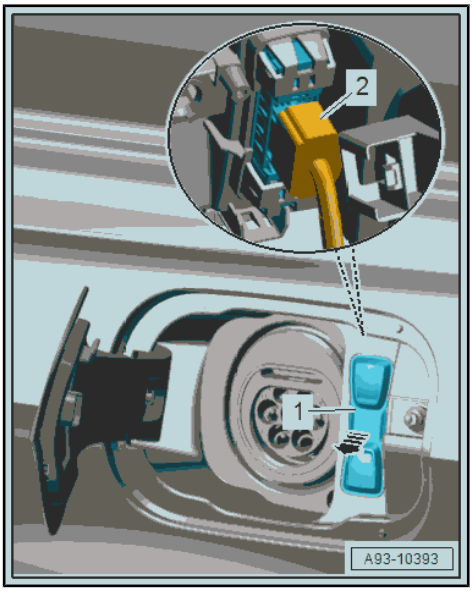

Installing

Install in reverse order of removal.

Tightening Specifications

- Refer to ⇒ Body Interior; Rep. Gr. 70 ; Luggage Compartment Trim Panels; Overview - Luggage Compartment Side Trim Panel .
- Refer to ⇒ Electrical Equipment; Rep. Gr. 97 ; Relay Panels, Fuse Panels, E-Boxes; Component Location Overview - Relay Panels, Fuse Panels, E-Boxes .

cardiagn.com

11 High-Voltage Battery Charger

⇒ “11.1 Overview - High-Voltage Battery Charger”, page 380

⇒ “11.2 High-Voltage Battery Charger 1 AX4 , Removing and Installing”, page 381

⇒ “11.3 High-Voltage Battery Charger 1 AX4 Bracket, Removing and Installing”, page 383

11.1 Overview - High-Voltage Battery Charger

1 - Bolt

- ❑ 49 Nm

2 - Expanding Rivet

3 - Bolt

- ❑ 9 Nm
- ❑ Quantity: 4

4 - Bracket

- ❑ Removing and installing. Refer to ⇒ “11.3 High-Voltage Battery Charger 1 AX4 Bracket, Removing and Installing”, page 383 .

5 - Washer

6 - High-Voltage Battery Charger 1 - AX4-

- ❑ With High-Voltage Battery Charger Control Module - J1050-
- ❑ Removing and installing. Refer to ⇒ “11.2 High-Voltage Battery Charger 1 AX4 , Removing and Installing”, page 381 .

7 - Bolt

- ❑ Tightening specification -item 13- ⇒ Item 13 (page 369) .

8 - Coolant Hose

9 - Coolant Hose

10 - Potential Equalization Cable

- ❑ Component Location Overview. Refer to ⇒ “9.2 Component Location Overview - Potential Equalization Cables”, page 368 .

11 - Nut

- ❑ 18 Nm
- ❑ Quantity: 2

12 - Heat Shield

- ❑ Removing and installing. Refer to ⇒ “10.4 High-Voltage Battery Charging Socket 1 UX4 , Removing and Installing”, page 375 .

cardiagn.com

13 - Lock Washer

❑ Quantity: 3

11.2 High-Voltage Battery Charger 1 - AX4- , Removing and Installing

Special tools and workshop equipment required

- Hose Clamps - Up To 25 mm - 3094-
- Coolant Collection System - VAS5014- or Shop Crane - Drip Tray - VAS6208-
- Hose Clip Pliers - VAS6362-
- Vehicle Diagnostic Tester

Removing

DANGER

Extremely dangerous due to high-voltage.

Electrocution can cause death or very serious personal injury.

– Have the high-voltage system de-energized by a qualified person.

– De-energize the high-voltage system. Refer to ⇒ “7 High-Voltage System, De-Energizing”, page 364 .

• If replacing the control module, select the “Replace control module” function for the corresponding control module. Refer to Vehicle Diagnostic Tester .

– Remove the diagonal braces. Refer to ⇒ Body Exterior; Rep. Gr. 66 ; Underbody Trim Panel; Diagonal Braces, Removing and Installing .

– Loosen the clamping washers -arrows-.

– Remove the heat shield -1-.

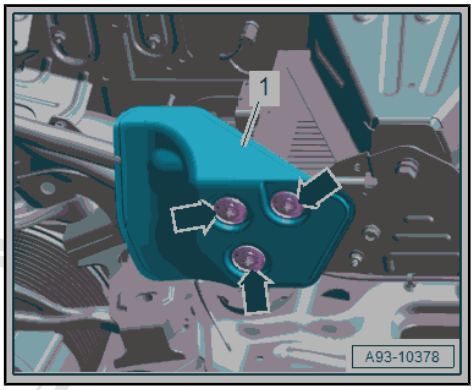

– Disconnect the connectors -2, 3 and 4-.

– Free up the high-voltage cables -1-.

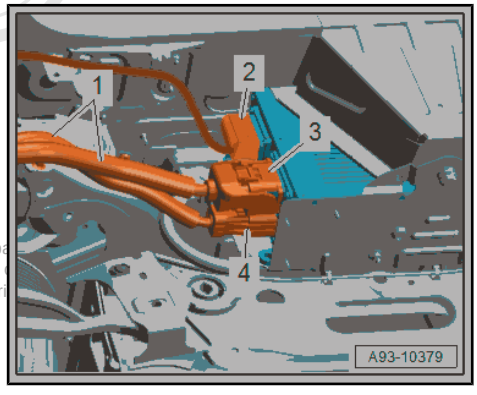

Protected by copyright. Copying for private or commercial purposes, in pa
permitted unless authorised by AUDI AG. AUDI AG does not guarantee
with respect to the correctness of information in this document. Copyri

cardiagn.com

– Free up the High-Voltage Cable for High-Voltage Heater (PTC) - P11- -1- -arrows- release and remove.

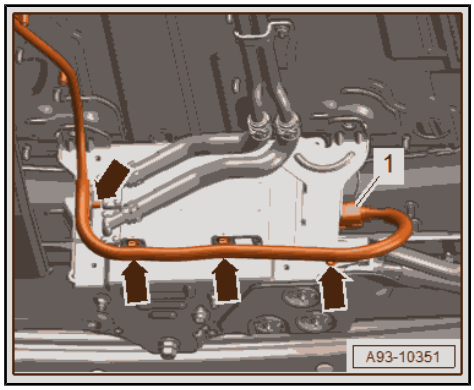

– To do so remove the connector lock -3- in the direction of -arrow A-.
– Press the release -4- in the direction of -arrow B- and remove the connector -1- approximately 5 mm up to the next release level.
– Press the release -5- in the direction of -arrow D- and remove the connector from the connector mount -2- in the direction of -arrow C-.

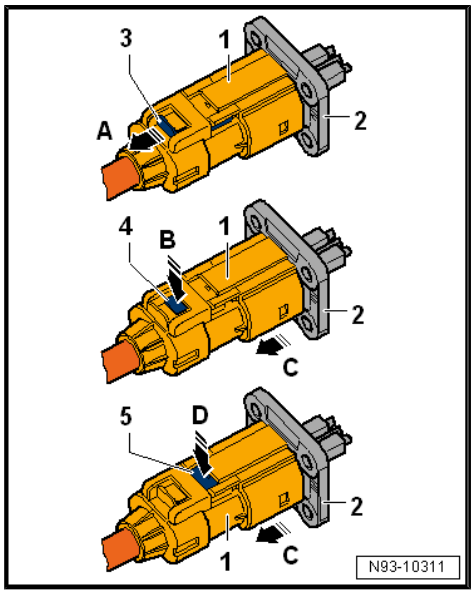

CAUTION

The cooling system is under pressure when the engine is warm. Risk of scalding due to hot steam and hot coolant.

Scalding the skin and other parts of the body is possible.

- **Wear safety gloves.**
- **Wear protective eyewear.**
- **Reduce the pressure by covering the coolant expansion tank cap with a cloth and carefully opening it.**

– Place the -VAS5014- or -VAS6208- underneath.
– Loosen the hose clamps, clamp off the coolant hoses -1 and 2- with the -3094- and then remove them.

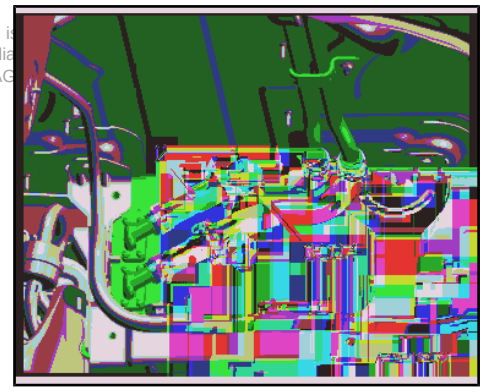

Protected by copyright. Copying for private or commercial purposes, in part or in whole, is not permitted unless authorised by AUDI AG. AUDI AG does not guarantee or accept any liability with respect to the correctness of information in this document. Copyright by AUDI AG.

cardiagn.com

– Remove the nut -5-.
– Free up the potential equalization cable -4-.
– Remove the expanding rivet -6-.
– Remove the bolts -1, 3 and 7-.
– Remove the High-Voltage Battery Charging Socket 1 - UX4- -2-.

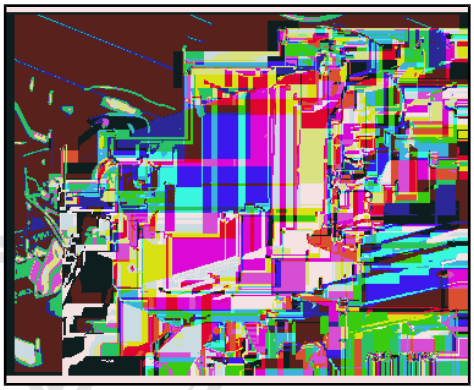

Installing

Install in reverse order of removal and note the following:

- Secure all hose connections with hose clamps that match the ones used in series production. Refer to the Parts Catalog.
- Used coolant cannot be used again.

WARNING

Extremely dangerous due to high-voltage.

Severe bodily injury or death by electrocution is possible.

– Have a qualified person put the high-voltage system back into service.

Protected by copyright. Copying for private or commercial purposes, in part or in whole, is not permitted unless authorised by AUDI AG. AUDI AG does not guarantee or accept any liability with respect to the correctness of information in this document. Copyright by AUDI AG.

– Re-energize the high-voltage system. Refer to ⇒ “8 High-Voltage System, Re-Energizing”, page 366 .
– Fill with coolant and bleed the coolant system for the high-voltage system coolant circuit. Refer to ⇒ “1.3.4 Coolant, Filling and Bleeding Coolant System, Vehicle with High-Voltage System, High-Voltage System Coolant Circuit”, page 148 .

Tightening Specifications

♦ Refer to ⇒ “11.1 Overview - High-Voltage Battery Charger”, page 380
♦ Refer to ⇒ Body Exterior; Rep. Gr. 66 ; Underbody Trim Panel; Overview - Diagonal Braces .

11.3 High-Voltage Battery Charger 1 - AX4- Bracket, Removing and Installing

Removing

– Remove the High-Voltage Battery Charger 1 - AX4- . Refer to ⇒ “11.2 High-Voltage Battery Charger 1 AX4 , Removing and Installing”, page 381 .
– Remove the bolts -arrows-.
– Remove the bracket -1- from the charger -2-.

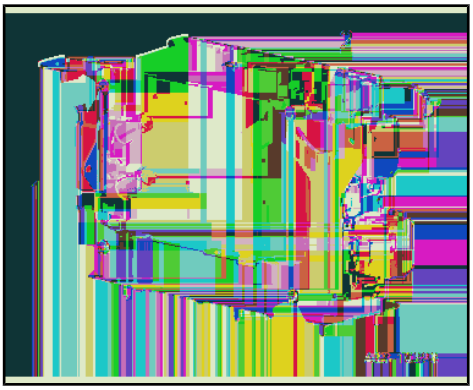

Installing

Install in reverse order of removal.

Tightening Specifications

♦ Refer to ⇒ “11.1 Overview - High-Voltage Battery Charger”, page 380

cardiagn.com

12 Special Tools

Special tools and workshop equipment required

- Seal Installer - Crankshaft - T10174-

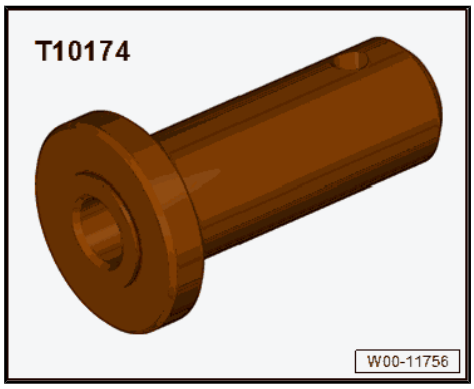

- Puller - Crankshaft/Power Steering Seal 2 - T20143/2-

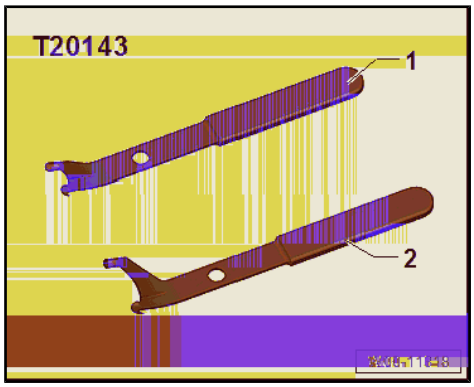

- Retaining Strap - T40155- (quantity 2)

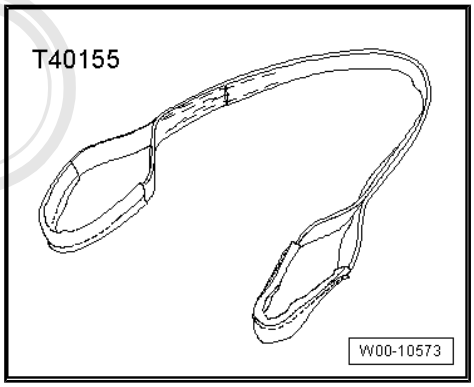

Protected by copyright. Copying for private or commercial purposes, in part or in whole, is not permitted unless authorised by AUDI AG. AUDI AG does not guarantee or accept any liability with respect to the correctness of information in this document. Copyright by AUDI AG.

- Gearbox Support - T40173-

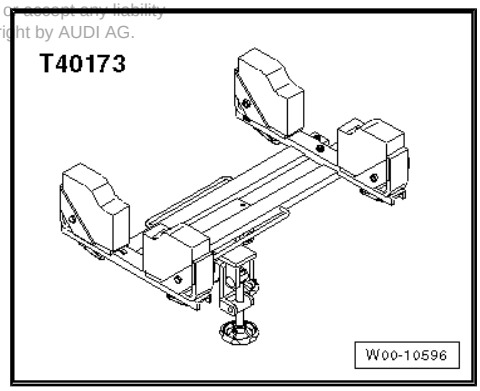

cardiagn.com

- Puller - Clutch Module - T40176-

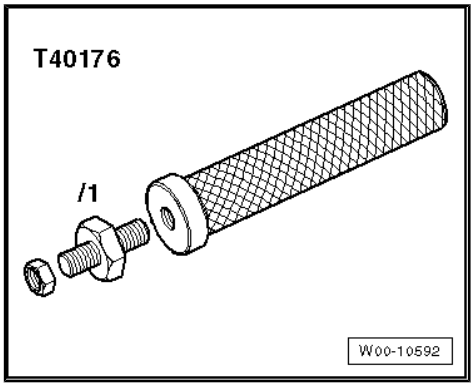

- Service Disconnect Lock - T40262/1-

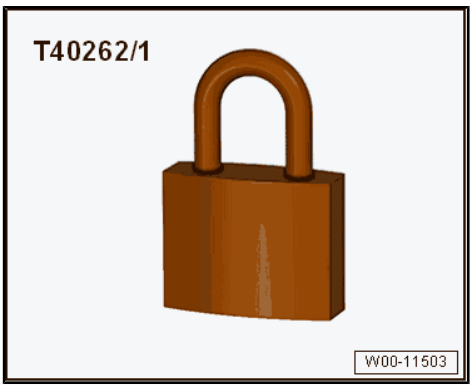

- Wrench - 21mm - T40263-

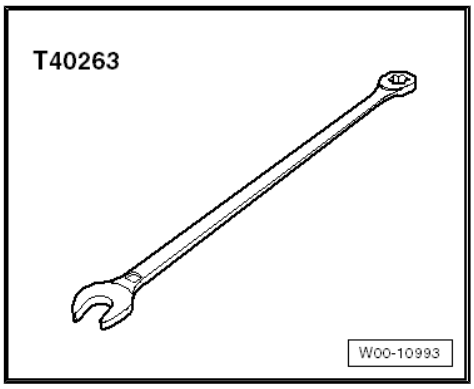

- Valve Cotter Tool Kit - Adapter - T40314-

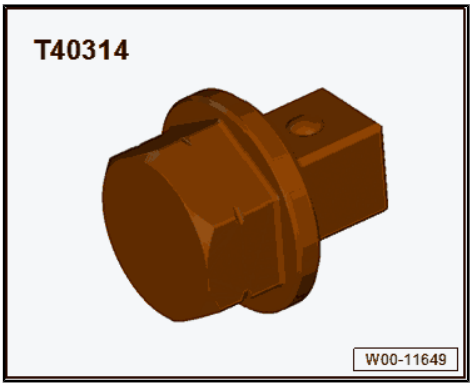

Protected by copyright. Copying for private or commercial purposes, in part or in whole, is not permitted unless authorised by AUDI AG. AUDI AG does not guarantee or accept any liability with respect to the correctness of information in this document. Copyright by AUDI AG.

cardiagn.com

- Torque Wrench 1332 Insert - Ring Wrench - 16mm - VAG1332/14-

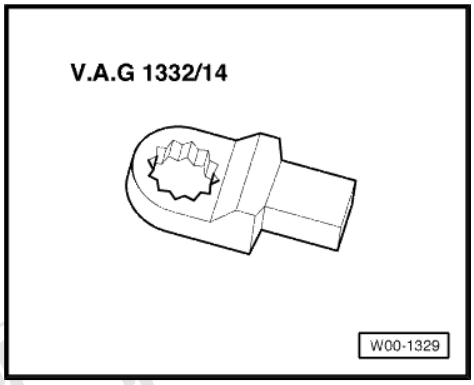

- Shop Crane - VAS6100-

Protected by copyright. Copying for private or commercial purp
permitted unless authorised by AUDI AG. AUDI AG does not g
with respect to the correctness of information in this docume

- Engine Bung Set - VAS6122-

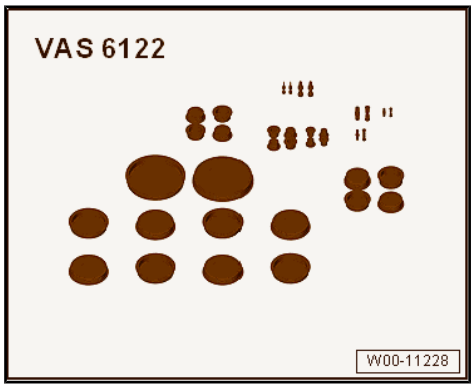

- Coolant Collection System - VAS5014- or Shop Crane - Drip Tray - VAS6208-
- Hose Clip Pliers - VAS6340-

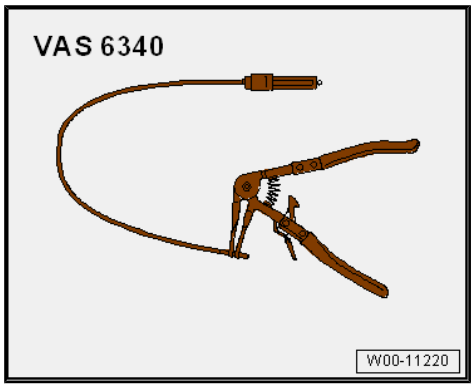

cardiagn.com

- Hose Clip Pliers - VAS6362-

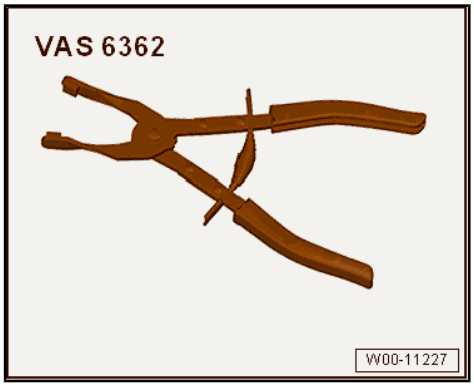

- Contact Surface Cleaning Set - VAS6410-
- Test Adapter - Hybrid Module - VAS6558A-

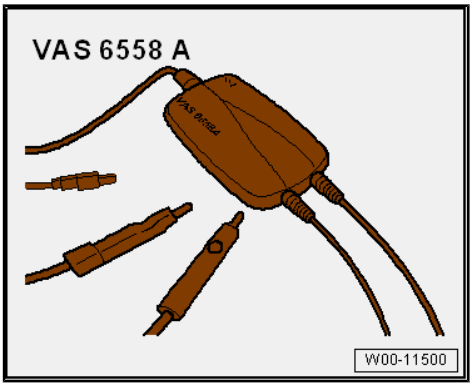

- Warning Sign - High Voltage - VAS6649-

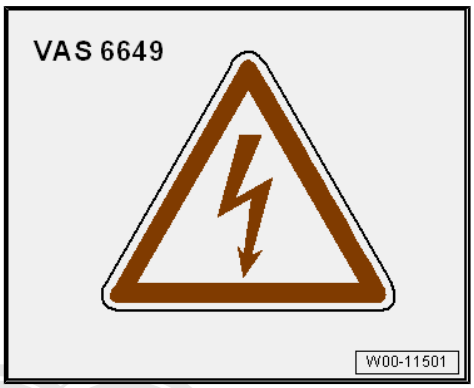

- Warning Sign - Switch - VAS6650A-

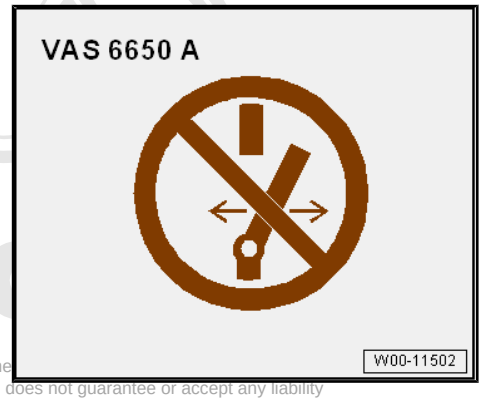

Protected by copyright. Copying for private or comme
permitted unless authorised by AUDI AG. AUDI AG does not guarantee or accept any liability
with respect to the correctness of information in this document. Copyright by AUDI AG.

cardiagn.com

- Engine and Gearbox Jack - VAS6931-

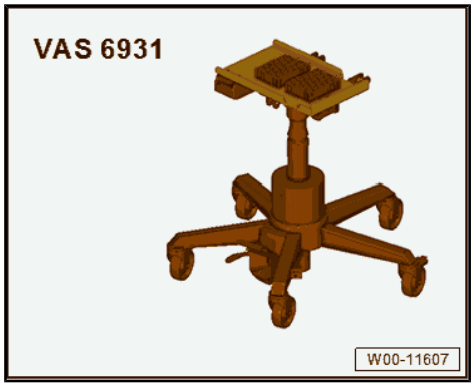

- Release Tool - VAS531001-

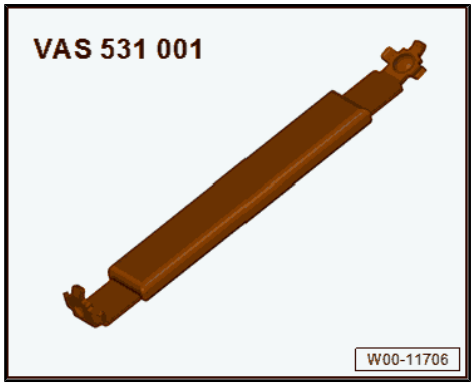

- USB Adapter for E-Tron Charger System - VAS681001-

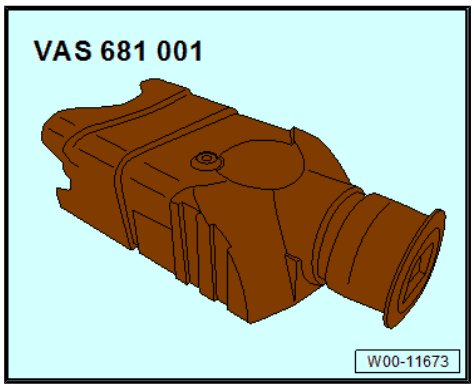

- 8 mm Shackle - VAS691007- , not illustrated (quantity 3)
- 10 mm Shackle - VAS691009- , not illustrated (quantity 2)
- Pry Lever - 80-200-

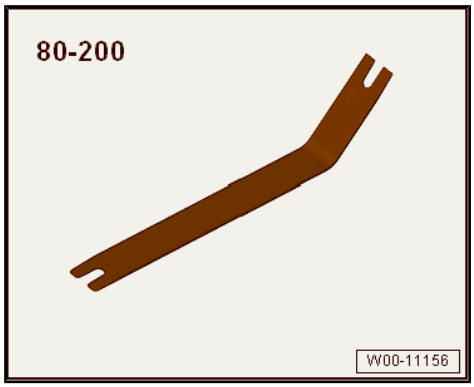

Protected by copyright. Copying for private or commercial purposes, in part or in whole, is not permitted unless authorised by AUDI AG. AUDI AG does not guarantee or accept any liability with respect to the correctness of information in this document. Copyright by AUDI AG.

cardiagn.com

- Hose Clamps - Up To 25mm - 3094-

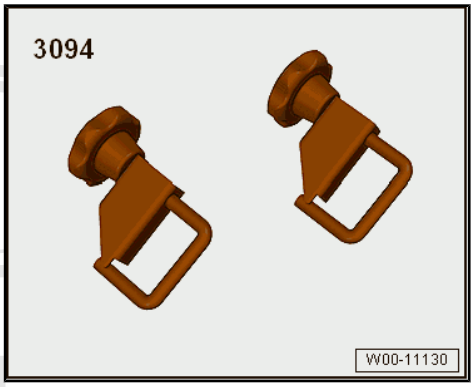

- Transmission Support - 3282-

Protected by copyright. Copying for private or commercial purposes, in part or in whole, is not permitted unless authorised by AUDI AG. AUDI AG does not guarantee or accept any liability with respect to the correctness of information in this document. Copyright by AUDI AG

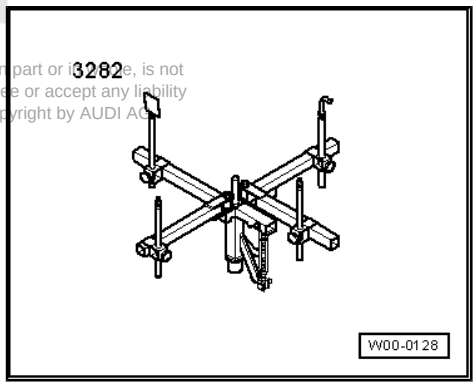

- Transmission Support Jig - 3336-

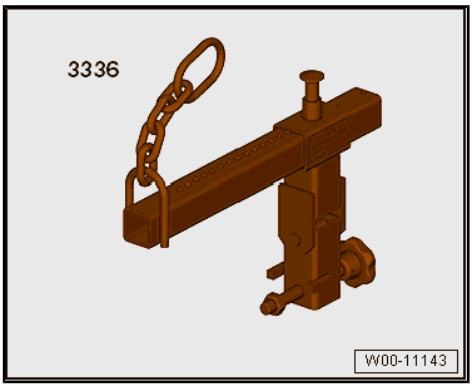

- Transmission Support - Pins 45 - 3282/45-

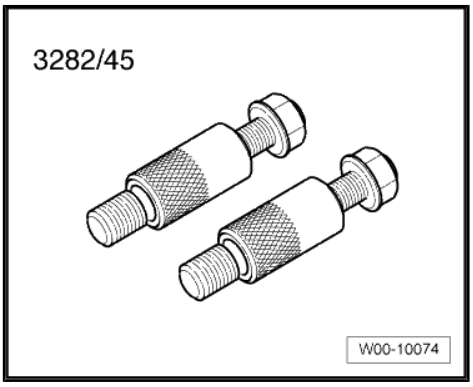

- Vehicle Diagnostic Tester
- USB Cable (USB 2.0 Type A/B), for example USB Connection Cable - VAS611001-
- Cleaning Solution - D 009 401 04-
- Universal Adhesive - D 001 200 M2-

cardiagn.com

- Grease for Clutch Plate Splines - G 000 100-
- Sealing Grease - G 052 128 A1-

cardiagn.com

Protected by copyright. Copying for private or commercial purposes, in part or in whole, is not permitted unless authorised by AUDI AG. AUDI AG does not guarantee or accept any liability with respect to the correctness of information in this document. Copyright by AUDI AG.

13 Revision History

DRUCK NUMBER: A005A010421

Factory Edition	Edit Edition	Job Type	Impact	Feedback	Notes	Quality Checked By
06.2016	10/25/2016	Local Feedback	Low	1210365		Eric P.
06.2016	6/30/2016	Factory Update	Low			Jim H
03.2016	05/24/2016	Factory Update		N/A		Jim H
12.2015	02/03/2016	Factory Update		N/A		Eric P.
09.2015	11/10/2015	Editorial Review		N/A		Eric P.
09.2015	11/04/2015	Factory Update		N/A		Eric P.
08.2015	11/03/2015	Correction		N/A	Fixed metadata, was missing CUEA and DDEA	Eric P.
08.2015	10/7/2015	Factory New		N/A		Jim H

Protected by copyright. Copying for private or commercial purposes, in part or in whole, is not permitted unless authorised by AUDI AG. AUDI AG does not guarantee or accept any liability with respect to the correctness of information in this document. Copyright by AUDI AG.
cardiagn.com

Cautions & Warnings

Please read these WARNINGS and CAUTIONS before proceeding with maintenance and repair work. You must answer that you have read and you understand these WARNINGS and CAUTIONS before you will be allowed to view this information.

- If you lack the skills, tools and equipment, or a suitable workshop for any procedure described in this manual, we suggest you leave such repairs to an authorized Audi retailer or other qualified shop. We especially urge you to consult an authorized Audi retailer before beginning repairs on any vehicle that may still be covered wholly or in part by any of the extensive warranties issued by Audi.

- Disconnect the battery negative terminal (ground strap)whenever you work on the fuel system or the electrical system. Do not smoke or work near heaters or other fire hazards. Keep an approved fire extinguisher handy.

- Audi is constantly improving its vehicles and sometimes these changes, both in parts and specifications, are made applicable to earlier models. Therefore, part numbers listed in this manual are for reference only. Always check with your authorized Audi retailer parts department for the latest information.

- Any time the battery has been disconnected on an automatic transmission vehicle, it will be necessary to reestablish Transmission Control Module (TCM) basic settings using the VAG 1551 Scan Tool (ST).

- Never work under a lifted vehicle unless it is solidly supported on stands designed for the purpose. Do not support a vehicle on cinder blocks, hollow tiles or other props that may crumble under continuous load. Never work under a vehicle that is supported solely by a jack. Never work under the vehicle while the engine is running.

Protected by copyright. Copying for private or commercial purposes, in part or in whole, is not permitted unless authorised by AUDI AG. AUDI AG does not guarantee or accept any liability with respect to the correctness of information in this document. Copyright by AUDI AG.

- For vehicles equipped with an anti-theft radio, be sure of the correct radio activation code before disconnecting the battery or removing the radio. If the wrong code is entered when the power is restored, the radio may lock up and become inoperable, even if the correct code is used in a later attempt.

- If you are going to work under a vehicle on the ground, make sure that the ground is level. Block the wheels to keep the vehicle from rolling. Disconnect the battery negative terminal (ground strap) to prevent others from starting the vehicle while you are under it.

- Do not attempt to work on your vehicle if you do not feel well. You increase the danger of injury to yourself and others if you are tired, upset or have taken medicine or any other substances that may impair you or keep you from being fully alert.

- Never run the engine unless the work area is well ventilated. Carbon monoxide (CO) kills.

- Always observe good workshop practices. Wear goggles when you operate machine tools or work with acid. Wear goggles, gloves and other protective clothing whenever the job requires working with harmful substances.

- Tie long hair behind your head. Do not wear a necktie, a scarf, loose clothing, or a necklace when you work near machine tools or running engines. If your hair, clothing, or jewelry were to get caught in the machinery, severe injury could result.

cardiagn.com

© 2002 Audi of America, Inc.
All rights reserved. Information contained in this document is based on the latest information available at the time of printing and is subject to the copyright and other intellectual property rights of Audi of America, Inc., its affiliated companies and its licensors. All rights are reserved to make changes at any time without notice. No part of this document may be reproduced, stored in a retrieval system, or transmitted in any form or by any means, electronic, mechanical, photocopying, recording, or otherwise, nor may these materials be modified or reposted to other sites, without the prior expressed written permission of the publisher.
Version 1.0

Cautions & Warnings

- Do not re-use any fasteners that are worn or deformed in normal use. Some fasteners are designed to be used only once and are unreliable and may fail if used a second time. This includes, but is not limited to, nuts, bolts, washers, circlips and cotter pins. Always follow the recommendations in this manual - replace these fasteners with new parts where indicated, and any other time it is deemed necessary by inspection.

- Illuminate the work area adequately but safely. Use a portable safety light for working inside or under the vehicle. Make sure the bulb is enclosed by a wire cage. The hot filament of an accidentally broken bulb can ignite spilled fuel or oil.

- Friction materials such as brake pads and clutch discs may contain asbestos fibers. Do not create dust by grinding, sanding, or by cleaning with compressed air. Avoid breathing asbestos fibers and asbestos dust. Breathing asbestos can cause serious diseases such as asbestosis or cancer, and may result in death.

- Finger rings should be removed so that they cannot cause electrical shorts, get caught in running machinery, or be crushed by heavy parts.

- Before starting a job, make certain that you have all the necessary tools and parts on hand. Read all the instructions thoroughly, do not attempt shortcuts. Use tools that are appropriate to the work and use only replacement parts meeting Audi specifications. Makeshift tools, parts and procedures will not make good repairs.

- Catch draining fuel, oil or brake fluid in suitable containers. Do not use empty food or beverage containers that might mislead someone into drinking from them. Store flammable fluids away from fire hazards. Wipe up spills at once, but do not store the oily rags, which can ignite and burn spontaneously.

- Use pneumatic and electric tools only to loosen threaded parts and fasteners. Never use these tools to tighten fasteners, especially on light alloy parts. Always use a torque wrench to tighten fasteners to the tightening torque listed.

- Keep sparks, lighted matches, and open flame away from the top of the battery. If escaping hydrogen gas is ignited, it will ignite gas trapped in the cells and cause the battery to explode.

- Be mindful of the environment and ecology. Before you drain the crankcase, find out the proper way to dispose of the oil. Do not pour oil onto the ground, down a drain, or into a stream, pond, or lake. Consult local ordinances that govern the disposal of wastes.

- The air-conditioning (A/C) system is filled with a chemical refrigerant that is hazardous. The A/C system should be serviced only by trained automotive service technicians using approved refrigerant recovery/recycling equipment, trained in related safety precautions, and familiar with regulations governing the discharging and disposal of automotive chemical refrigerants.

- Before doing any electrical welding on vehicles equipped with anti-lock brakes (ABS), disconnect the battery negative terminal (ground strap) and the ABS control module connector.

- Do not expose any part of the A/C system to high temperatures such as open flame. Excessive heat will increase system pressure and may cause the system to burst.

Protected by copyright. Copying for private or commercial purposes, in part or in whole, is not permitted unless authorised by AUDI AG. AUDI AG does not guarantee or accept any liability with respect to the correctness of information in this document. Copyright by AUDI AG.

cardiagn.com

© 2002 Audi of America, Inc.
All rights reserved. Information contained in this document is based on the latest information available at the time of printing and is subject to the copyright and other intellectual property rights of Audi of America, Inc., its affiliated companies and its licensors. All rights are reserved to make changes at any time without notice. No part of this document may be reproduced, stored in a retrieval system, or transmitted in any form or by any means, electronic, mechanical, photocopying, recording, or otherwise, nor may these materials be modified or reposted to other sites, without the prior expressed written permission of the publisher.
Version 1.0

Cautions & Warnings

- When boost-charging the battery, first remove the fuses for the Engine Control Module (ECM), the Transmission Control Module (TCM), the ABS control module, and the trip computer. In cases where one or more of these components is not separately fused, disconnect the control module connector(s).

- Some of the vehicles covered by this manual are equipped with a supplemental restraint system (SRS), that automatically deploys an airbag in the event of a frontal impact. The airbag is operated by an explosive device. Handled improperly or without adequate safeguards, it can be accidentally activated and cause serious personal injury. To guard against personal injury or airbag system failure, only trained Audi Service technicians should test, disassemble or service the airbag system.

- Do not quick-charge the battery (for boost starting) for longer than one minute, and do not exceed 16.5 volts at the battery with the boosting cables attached. Wait at least one minute before boosting the battery a second time.

- Never use a test light to conduct electrical tests of the airbag system. The system must only be tested by trained Audi Service technicians using the VAG 1551 Scan Tool (ST) or an approved equivalent. The airbag unit must never be electrically tested while it is not installed in the vehicle.

- Some aerosol tire inflators are highly flammable. Be extremely cautious when repairing a tire that may have been inflated using an aerosol tire inflator. Keep sparks, open flame or other sources of ignition away from the tire repair area. Inflate and deflate the tire at least four times before breaking the bead from the rim. Completely remove the tire from the rim before attempting any repair.

- When driving or riding in an airbag-equipped vehicle, never hold test equipment in your hands or lap while the vehicle is in motion. Objects between you and the airbag can increase the risk of injury in an accident.

I have read and I understand these Cautions and Warnings.

cardiagn.com

Protected by copyright. Copying for private or commercial purposes, in part or in whole, is not permitted unless authorised by AUDI AG. AUDI AG does not guarantee or accept any liability with respect to the correctness of information in this document. Copyright by AUDI AG.

© 2002 Audi of America, Inc.
All rights reserved. Information contained in this document is based on the latest information available at the time of printing and is subject to the copyright and other intellectual property rights of Audi of America, Inc., its affiliated companies and its licensors. All rights are reserved to make changes at any time without notice. No part of this document may be reproduced, stored in a retrieval system, or transmitted in any form or by any means, electronic, mechanical, photocopying, recording, or otherwise, nor may these materials be modified or reposted to other sites, without the prior expressed written permission of the publisher.
Version 1.0