PUBLISHED: 07-AUG-2012
2015.0 RANGE ROVER (LG), 309-00

EXHAUST SYSTEM - TDV8 4.4L DIESEL

SPECIFICATIONS

Torque Specifications

DESCRIPTION	NM	LB-FT
Rear muffler to diesel particulate filter (DPF) clamp nuts	55	41
Downpipe LH nuts	47	35
Downpipe RH to catalytic converter clamp nut	47	35
Catalytic converter to diesel particulate filter retaining nuts	30	22
DPF pressure sensor pipe unions	25	18
Exhaust gas temperature sensors**	35	22

** Apply suitable high temperature resistant anti-seize compound

PUBLISHED: 30-SEP-2014
2015.0 RANGE ROVER (LG), 309-00

EXHAUST SYSTEM - TDV8 4.4L DIESEL

TDV8 4.4L DIESEL - EXHAUST SYSTEM COMPONENT LOCATION - WITHOUT DIESEL PARTICULATE FILTER

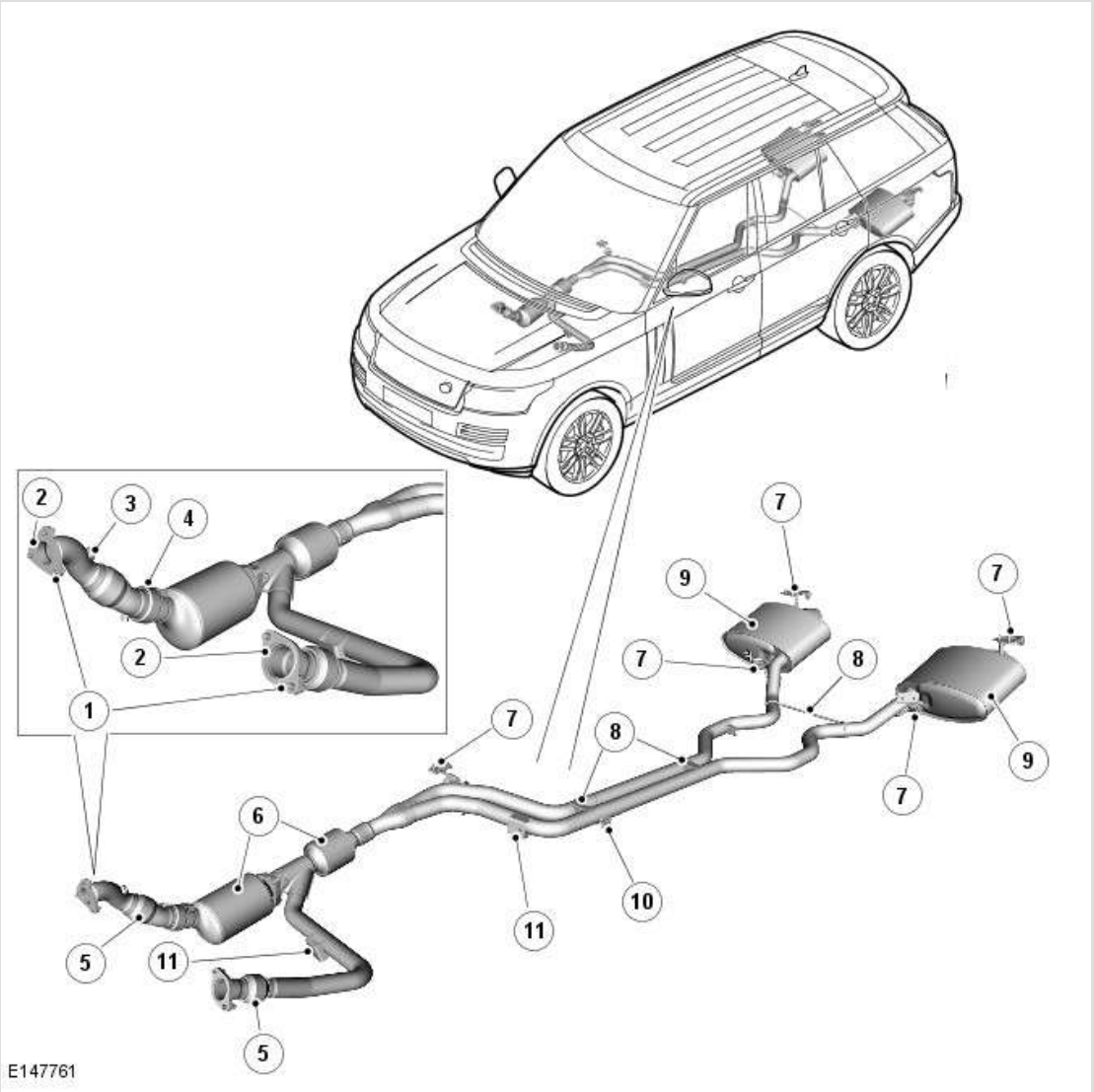

ITEM	DESCRIPTION
1	Bolt (5 Off)
2	Gasket
3	Heated Oxygen Sensor Mounting Boss
4	Clamp
5	Flexible Coupling
6	Catalytic Converter

7	Mounting Rubber (5 Off)
8	Exhaust Brace
9	Silencer - Rear
10	Torca Clamp
11	Mass Damper (2 Off)

TDV8 4.4L DIESEL - EXHAUST SYSTEM COMPONENT LOCATION - WITH DIESEL PARTICULATE FILTER

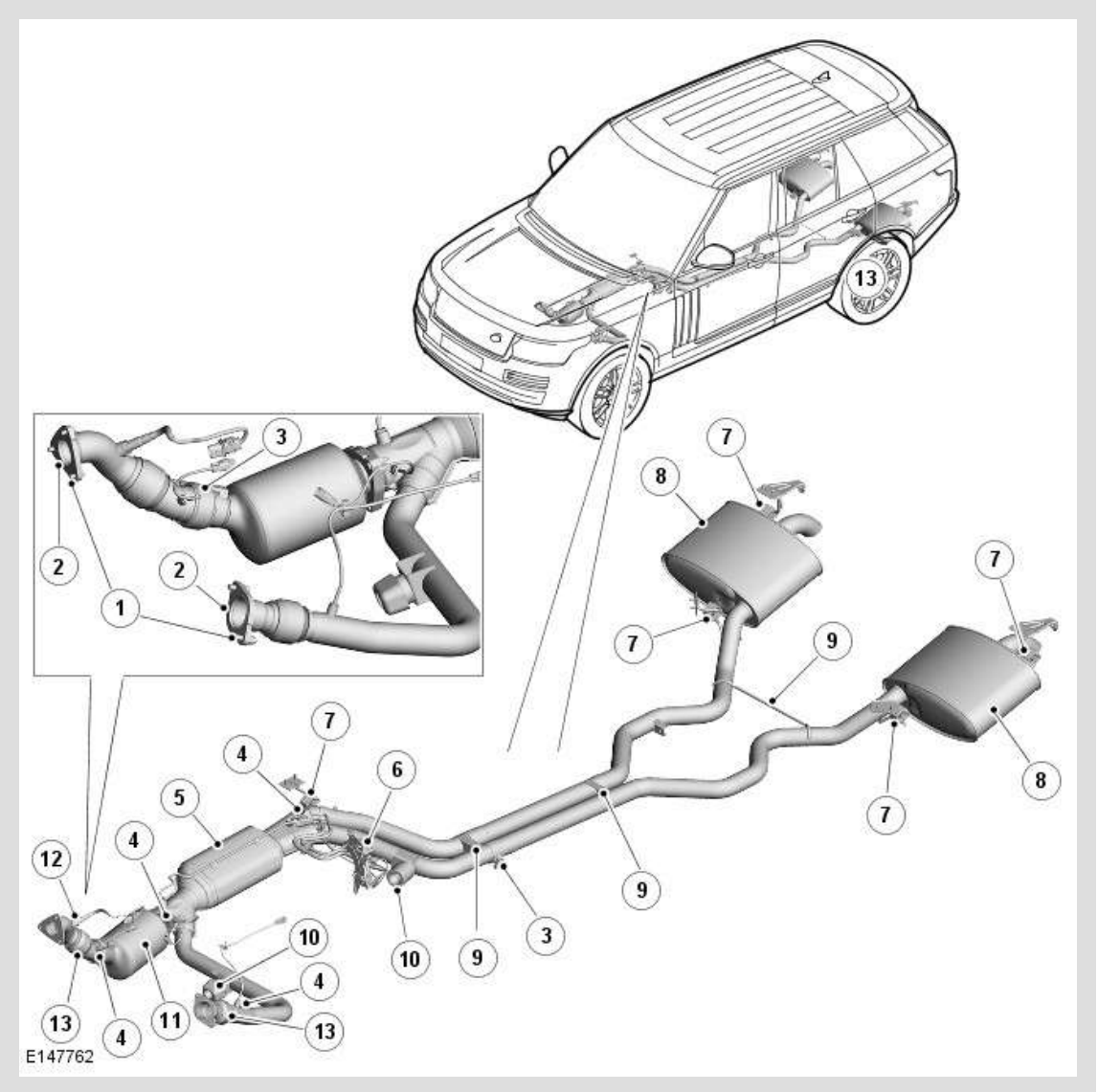

ITEM	DESCRIPTION
1	Bolts (5 Off)
2	Gasket
3	Clamp
4	Exhaust Gas Temperature Sensor

5	Diesel Particulate Filter
6	Differential Pressure Sensor
7	Mounting Rubber (5 Off)
8	Silencer - Rear
9	Exhaust Brace
10	Mass Damper
11	Catalytic Converter
12	Heated Oxygen Sensor Mounting Boss
13	Flexible Coupling

OVERVIEW

There are two variants of the TDV8 4.4L diesel exhaust system:

- Non DPF System – EU4 Emission regulations.
- DPF System – EU5 Emission regulations.

On vehicles with a DPF fitted, a single catalytic converter is located in the bank 1 exhaust downpipe from the manifold. On vehicles without a DPF, a second catalytic converter is fitted in place of the DPF.

The system is attached to the underside of the body with 5 mounting rubbers which are located on hanger brackets that are welded to the system. The mounting rubbers locate on hanger brackets which are bolted to the underside of the vehicle body.

CAUTIONS:

- The use of bio-fuels can seriously contaminate and destroy the coatings used on the catalytic converter. The DPF and the catalytic converter can become irreversibly contaminated if non-specified oils or fuels are used. This will result in the vehicle being unable to regenerate the DPF, becoming non-compliant with rear silencer emission regulations and replacement of the catalytic converter and DPF will be required.
- If the vehicle is waded in deep water and the engine is stopped with the rear silencers submerged, the water, which can enter the system, can also contaminate both the DPF and the catalytic converter. This can result in catalytic converter damage and damaging the ability for the DPF to regenerate therefore requiring both components to be replaced.

COMPONENT DESCRIPTION

FRONT SECTION

The front section comprises of two catalytic converters or if a DPF is fitted a catalytic converter and diesel particulate filter. The bank 1 exhaust inlet pipe connects to the catalytic converter and the bank 2 exhaust inlet pipe connects in between the two catalytic converters or the catalytic converter and diesel particulate filter (if fitted).

Each inlet pipe is fitted with a flange that connects to the turbocharger for each cylinder bank. The bank 1 inlet flange uses a 3 bolt fixing and the bank 2 inlet flange uses a 2 bolt fixing that are screwed into threaded holes in each of the turbochargers. Each flange is sealed using a gasket and both inlet pipes are fitted with flexible couplings.

The catalytic converter is joined to either a second catalytic converter or a diesel particulate filter using a 3 bolt fixing. The front section of the exhaust also has 2 mass dampers which absorbs resonance from the system.

Vehicles without DPF: The catalytic converter outlet pipe is connected to a 'Y' joint which splits the outlet pipe into 2 separate pipes which connect to the rear silencer.

Vehicles with DPF: The diesel particulate filter outlet pipe is connected to a 'Y' joint which splits outlet pipe into 2 separate pipes which connect to the rear silencer.

REAR SECTION

The rear section comprises of two pipes from the catalytic converter or diesel particulate filter that go into each of the rear silencers. They are joined at the centre point of the exhaust using a torca clamp.

The two rear silencers are attached to the body using two exhaust hanging brackets on both sides of the silencers.

There are 3 brace’s that are welded between the pipes, to retain system in position and reduce exhaust flexing.

CATALYTIC CONVERTER

The oxidizing catalytic converter is located in the front section of bank 1 inlet pipe from the turbocharger, after the pre-catalyst exhaust temperature sensor (vehicles with DPF only) and the Heated Oxygen Sensor (HO2S).

NOTE:

On vehicles fitted with DPF: The Pre and Post DPF Temperature Sensors are used by the engine management system to monitor the DPF regeneration purposes.

On vehicles without a DPF, a second catalytic converter is fitted in place of the DPF.

The engine management system provides accurately metered quantities of fuel to the combustion chambers to ensure the most efficient use of fuel and to minimise the exhaust emissions. On vehicles without DPF, a second catalytic converter is fitted to further reduce the carbon monoxide and the hydrocarbons content of the gases. In the catalytic converter the exhaust gases are passed through honeycombed ceramic elements coated with a special surface treatment called 'washcoat'. The washcoat increases the surface area of the ceramic elements by a factor of approximately 7000. The washcoat is a coating containing platinum and palladium, which are active constituents for converting harmful emissions into inert by-products. The platinum and palladium add oxygen to the carbon monoxide and the hydrocarbons in the exhaust gases and convert them into carbon dioxide and water respectively.

DIESEL PARTICULATE FILTER

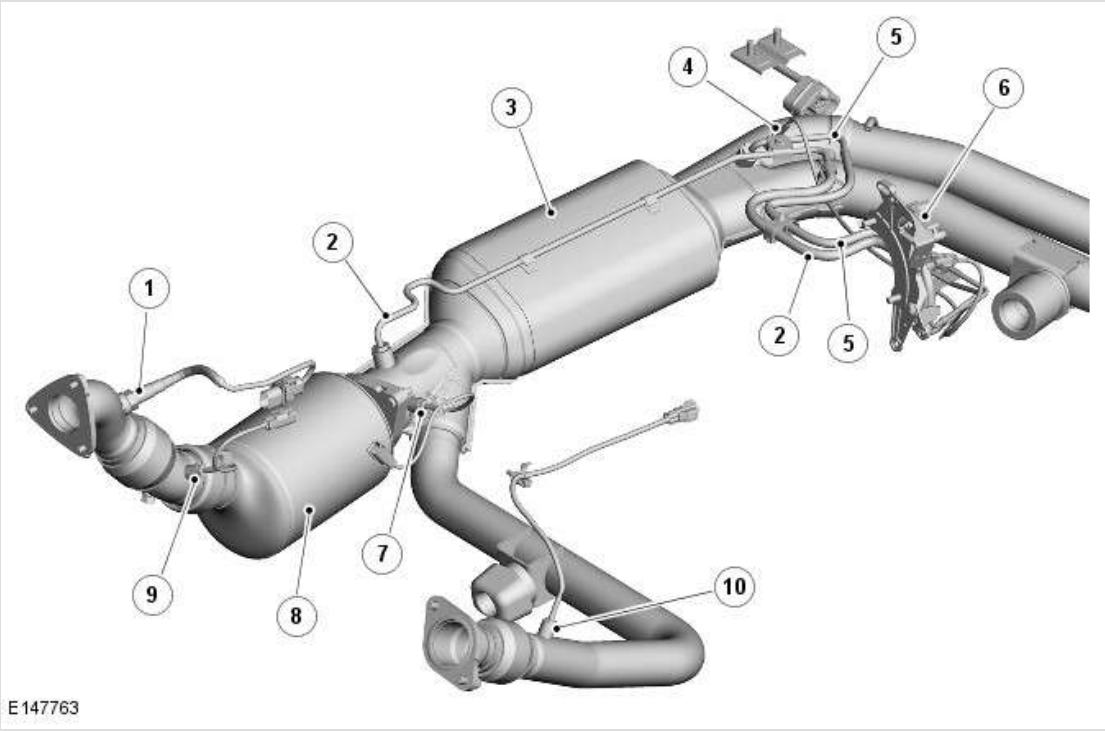

ITEM	DESCRIPTION
1	Heated Oxygen Sensor
2	High Pressure Pipe
3	Diesel Particulate Filter
4	Post-DPF Temperature Sensor
5	Low Pressure Pipe
6	Differential Pressure Sensor
7	Post-Catalyst Temperature Sensor
8	Catalytic Converter
9	Pre-Catalyst Temperature Sensor
10	Pre-DPF Temperature Sensor

For further information regarding Diesel Particulate Filter refer to Exhaust System (309-00B: Exhaust System - TDV8 4.4L Diesel, Diesel Particulate Filter (System Operation and Component Description)

PUBLISHED: 23-MAR-2017
2015.0 RANGE ROVER (LG), 309-00

EXHAUST SYSTEM - TDV8 4.4L DIESEL

DIESEL PARTICULATE FILTER - COMPONENT LOCATION (G1781009)

COMPONENT LOCATION - 1 OF 5 - DIESEL PARTICULATE FILTER - VEHICLES UP TO 15MY

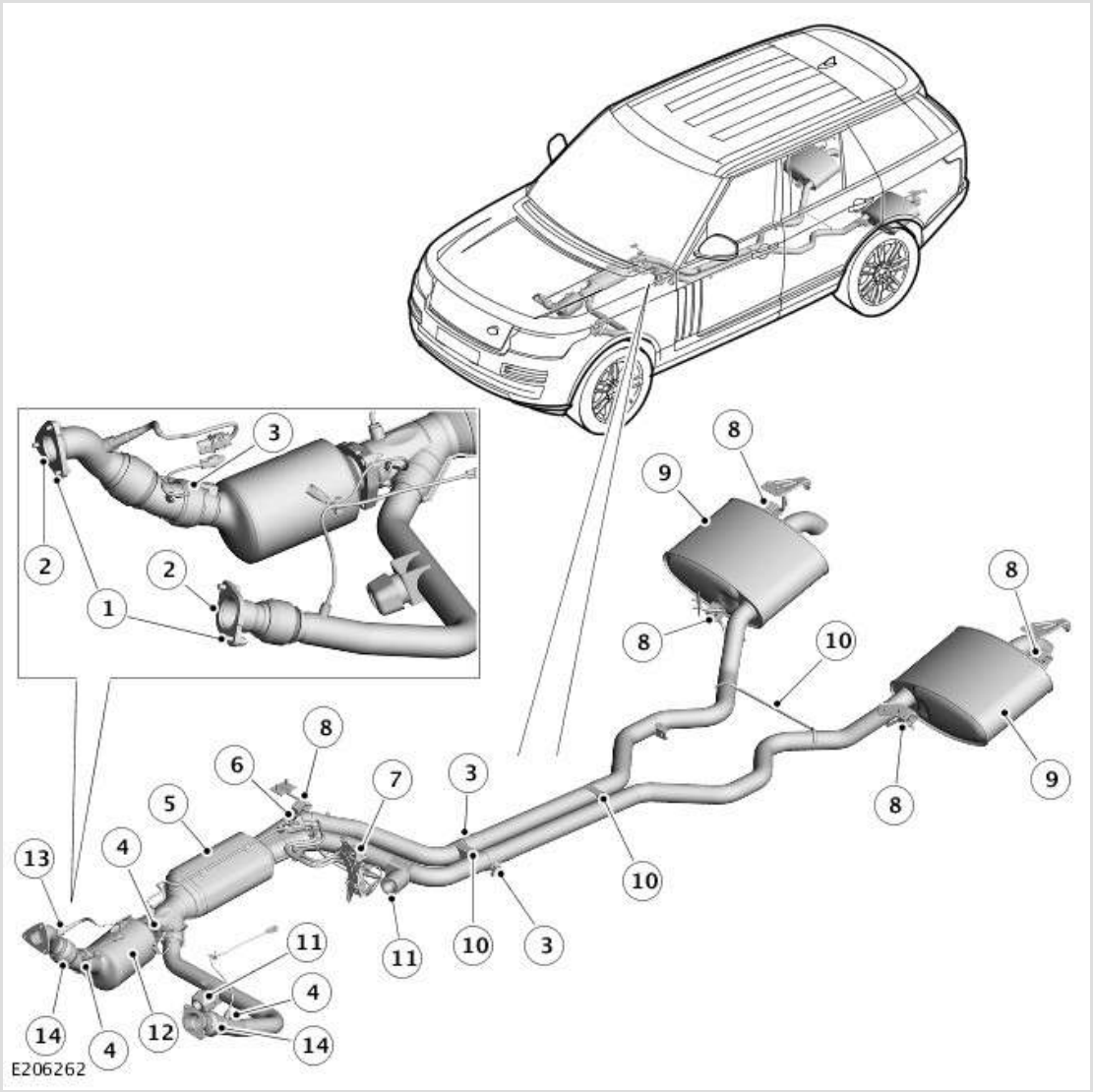

ITEM	DESCRIPTION
1	Bolts (5 Off)
2	Gasket
3	Clamp
4	Pre-Diesel Particulate Filter (DPF) exhaust gas temperature sensor mounting boss
5	DPF
6	Post-DPF exhaust gas temperature sensor mounting boss

7	Differential Pressure Sensor
8	Mounting rubber (5 Off)
9	Rear silencer
10	Exhaust brace
11	Mass damper
12	Catalytic converter
13	Heated Oxygen Sensor (HO2S) mounting boss
14	Flexible coupling

COMPONENT LOCATION - 2 OF 5 - DIESEL PARTICULATE FILTER - VEHICLES UP TO 15MY

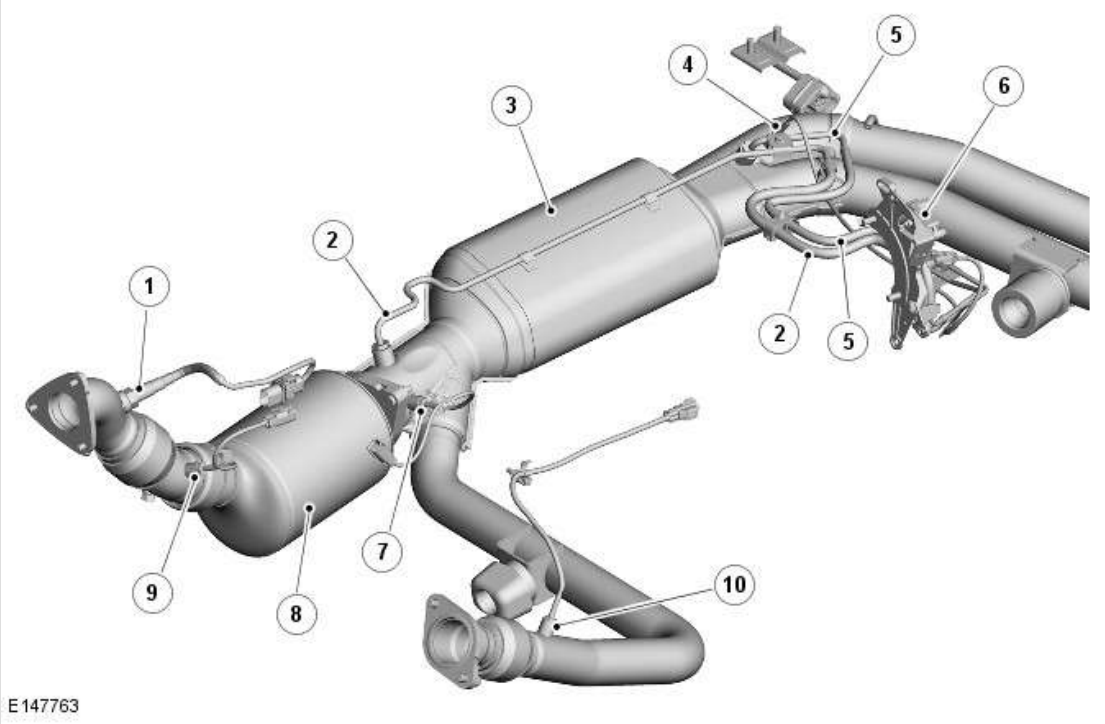

ITEM	DESCRIPTION
1	Heated Oxygen Sensor (HO2S)
2	High pressure pipe
3	Diesel Particulate Filter (DPF)
4	Post-DPF exhaust gas temperature sensor
5	Low pressure pipe
6	Differential Pressure Sensor
7	Pre-DPF exhaust gas temperature sensor

8	Catalytic converter
9	Pre-catalyst exhaust gas temperature sensor
10	Secondary turbocharger exhaust gas temperature sensor

COMPONENT LOCATION - 3 OF 5 - DIESEL PARTICULATE FILTER - EU5 VARIANT VEHICLES FROM 16MY

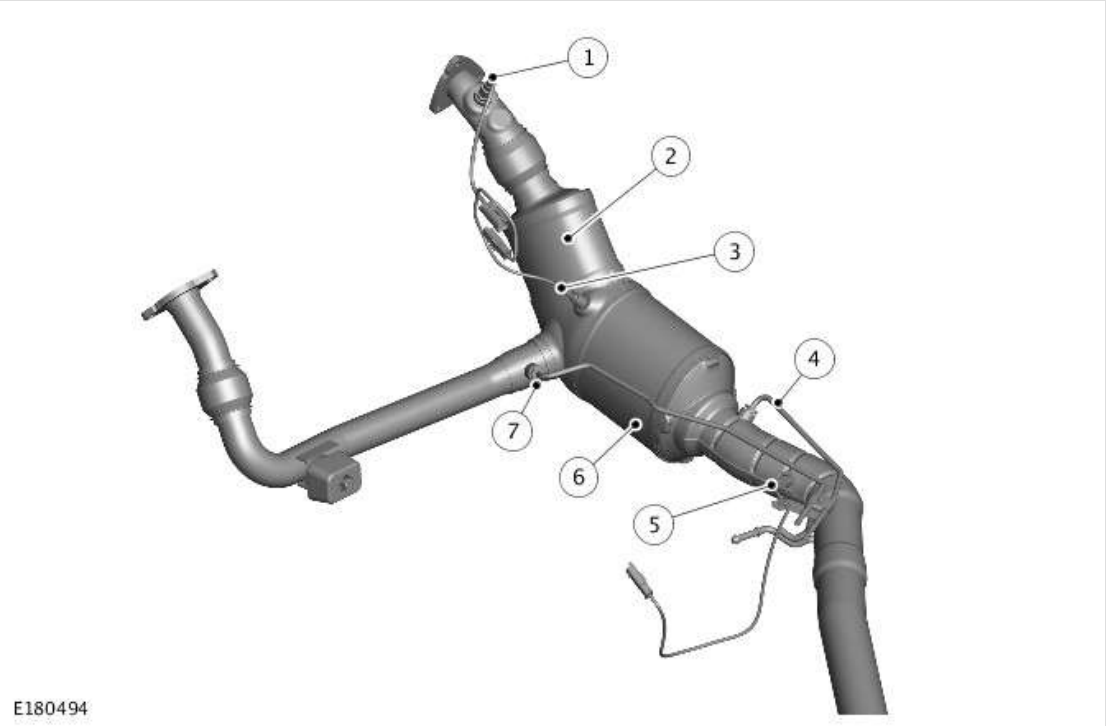

ITEM	DESCRIPTION
1	Heated Oxygen Sensor (HO2S)
2	Catalytic converter
3	Pre-Diesel Particulate Filter (DPF) exhaust gas temperature sensor
4	Low pressure pipe to differential pressure sensor
5	DPF exhaust gas temperature sensor
6	DPF
7	High pressure pipe to differential pressure sensor

COMPONENT LOCATION - 4 OF 5 - DIESEL PARTICULATE FILTER - EU6 VARIANT VEHICLES FROM 16MY

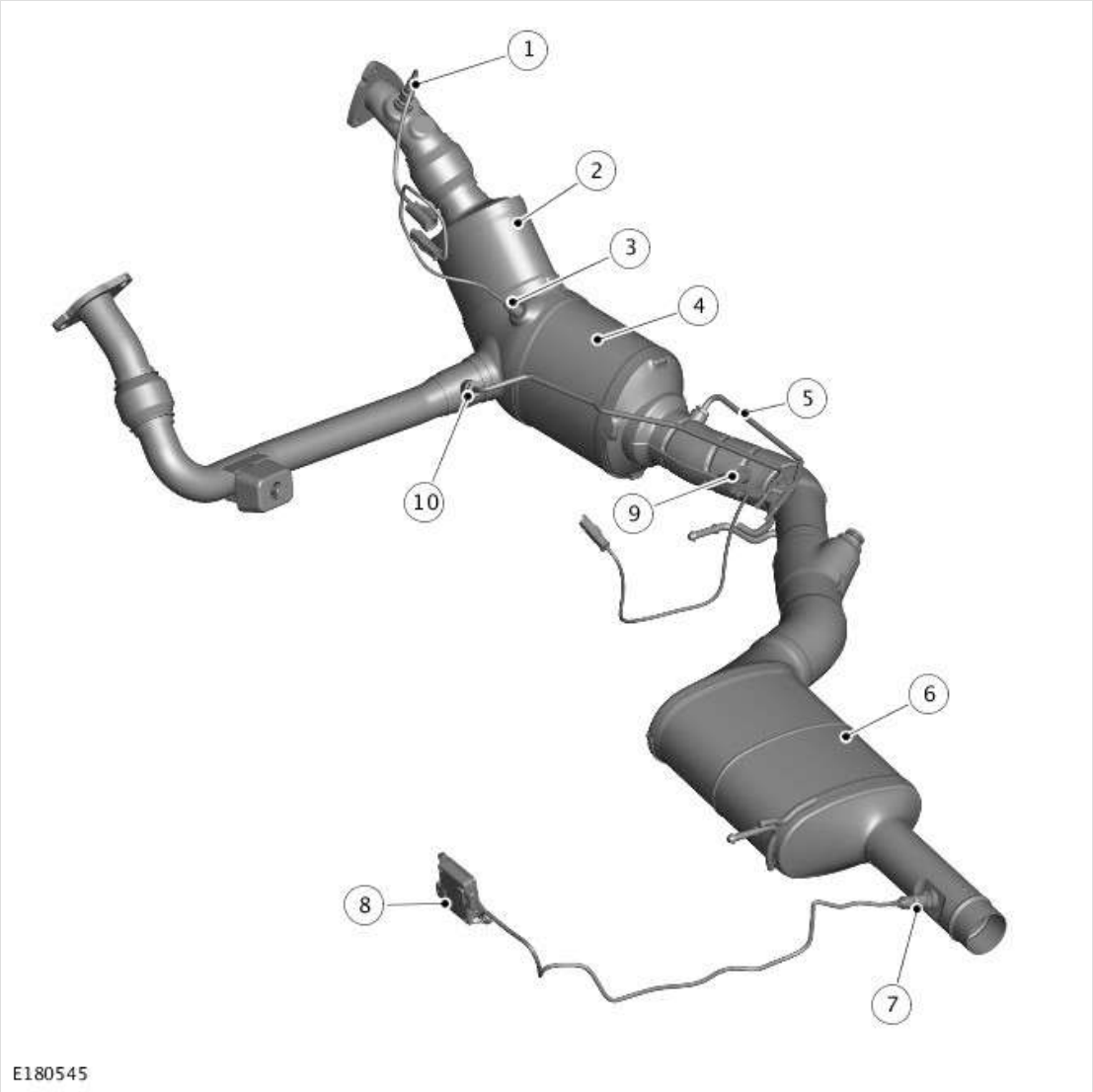

ITEM	DESCRIPTION
1	Heated Oxygen Sensor (HO2S)
2	Catalytic converter
3	Pre-Diesel Particulate Filter (DPF) exhaust gas temperature sensor
4	DPF
5	Low pressure pipe to differential pressure sensor
6	Selective Catalyst Reduction (SCR) catalytic converter
7	Post-SCR NOx sensor
8	Post-SCR NOx sensor control module
9	Post-DPF exhaust gas temperature sensor
10	High pressure pipe to differential pressure sensor

COMPONENT LOCATION - 5 OF 5 - DIFFERENTIAL PRESSURE SENSOR

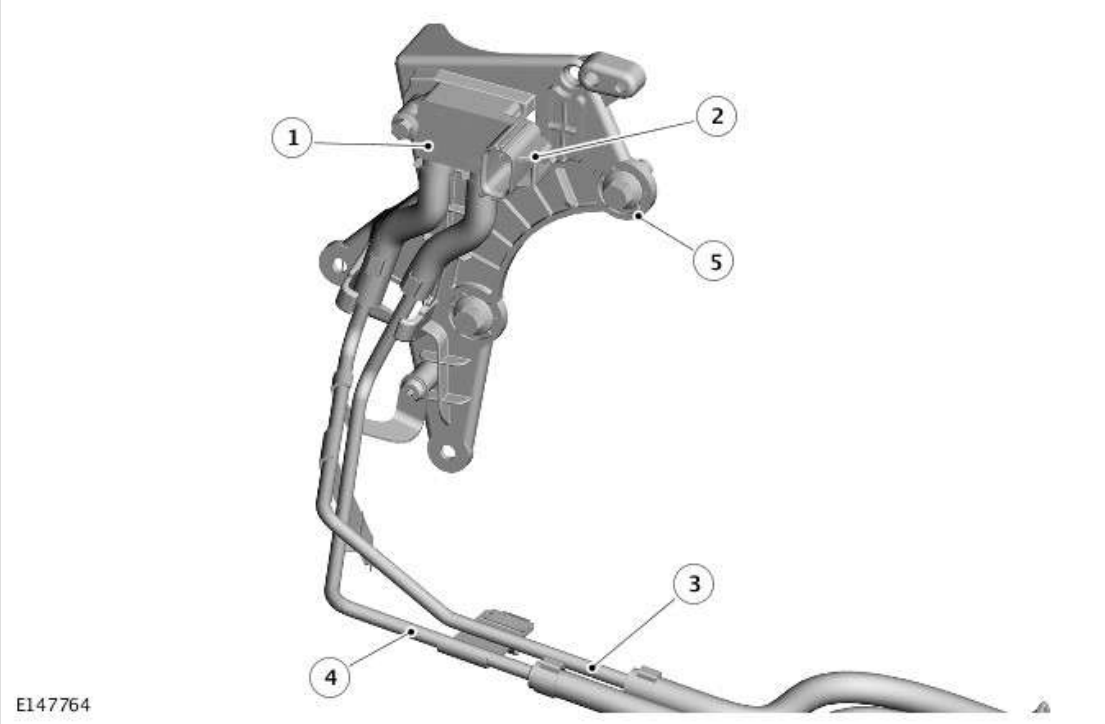

ITEM	DESCRIPTION
1	Differential pressure sensor
2	Electrical connector
3	Low pressure hose
4	High pressure hose
5	Bracket

PUBLISHED: 02-JUN-2015
2015.0 RANGE ROVER (LG), 309-00

EXHAUST SYSTEM - TDV8 4.4L DIESEL

DIESEL PARTICULATE FILTER - SYSTEM OPERATION AND COMPONENT DESCRIPTION (G1781010)

SYSTEM OPERATION

DIESEL PARTICULATE FILTER (DPF)

Two processes are used to regenerate the Diesel Particulate Filter (DPF); passive and active.

Passive Regeneration

Passive regeneration requires no special engine management intervention and occurs during normal engine operation. The passive regeneration involves a slow conversion of the particulate matter deposited in the DPF into carbon dioxide. This process occurs when the DPF temperature exceeds 250°C (482°F) and is a continuous process when the vehicle is being driven at higher engine loads and speeds.

During passive regeneration, only a portion of the particulate matter is converted into carbon dioxide. This is because the chemical reaction, which utilizes nitrogen dioxide, is slower than the rate of engine production of particulate matter and is effective from 250°C (482°F).

Above 580°C (1076°F) the conversion efficiency of the particulates into carbon dioxide rapidly increases. These temperatures are generally only being achieved using the active regeneration process.

Active Regeneration

Active regeneration starts when the particulate loading of the DPF reaches a threshold as monitored or determined by the DPF control software. The threshold calculation is based on driving style, distance travelled and back pressure signals from the differential pressure sensor.

Active regeneration generally occurs every 400 km (250 miles) although this is dependant on how the vehicle is driven. For example, if the vehicle is driven at low loads in urban traffic regularly, active regeneration will occur more often. This is due to the rapid build-up of particulates in the DPF than if the vehicle is driven at high speeds when passive regeneration will have occurred.

The DPF software incorporates a mileage trigger which is used as back-up for active regeneration. If active regeneration has not been initiated by a back pressure signal

from the differential pressure sensor, regeneration is requested based on distance travelled.

Active regeneration of the DPF is commenced when the temperature of the DPF is increased to the combustion temperature of the particles. The DPF temperature is raised by increasing the exhaust gas temperature. This is achieved by introducing post-injection of fuel after the pilot and main fuel injections have occurred.

It is determined by the DPF software monitoring the signals from the two DPF temperature sensors to establish the temperature of the DPF.

Depending on the DPF temperature, the DPF software requests the Engine Control Module (ECM) to perform either one or two post-injections of fuel:

- The first post-injection of fuel is associated with retarded combustion to increase the temperature of the exhaust gas and therefore allow the oxidation catalyst to reach it's operational temperature.
- The second post-injection of fuel is injected late in the power stroke cycle. The fuel is not intended to combust in the cylinder, and hence unburnt fuel passes into the exhaust where it creates an exothermic event within the catalytic converter, further increasing the temperature of the DPF.

The active regeneration process takes up to 20 minutes to complete. The first phase increases the exhaust gas temperature to ensure the catalytic converter is active. The second phase further increases the DPF temperature to the optimum temperature for particle combustion. This temperature is then controlled for 15-20 minutes to ensure complete oxidation of the particles within the DPF. The oxidation process converts the carbon particles to carbon dioxide.

The active regeneration temperature of the DPF is closely monitored by the DPF software to maintain a target temperature at the DPF inlet. The temperature control ensures that the temperatures do not exceed the operational limits of the turbocharger and the catalytic converter. The turbocharger inlet temperature must not exceed 830°C (1526°F), the catalytic converter brick temperature must not exceed 800°C (1472°F) and the exit temperature must remain below 875°C (1382°F).

Air management control during DPF regeneration

The DPF air management function controls the following:

- Exhaust gas recirculation (EGR) control
- Turbocharger boost pressure control
- Intake mass air flow.

During active regeneration, the EGR operation is disabled and the closed-loop activation of the turbocharger boost controller is calculated. The air management function controls the air in the intake manifold to a predetermined mass flow. This control is required to achieve the correct in-cylinder conditions for stable and robust combustion of the post injected fuel.

The function controls the intake mass air flow by actuating the throttle and by adjustment of the turbocharger boost pressure control.

If, due to vehicle usage and/or driving style, the active regeneration process cannot take place or is unable to regenerate the DPF, the dealer can force regenerate the DPF. This is achieved by driving the vehicle until the engine is at its normal operating temperature and then driving for approximately a further 20 minutes at speeds between 60 km/h to 120 km/h (40 mph to 70 mph). It is possible that the regeneration process will occur at lower speeds, but the events may take longer at a 48 km/h (30 mph) average speed.

DPF Control

The DPF requires constant monitoring to ensure that it is operating at its optimum efficiency and does not become blocked. The ECM contains DPF software which controls the monitoring and operation of the DPF system and also monitors other vehicle data to determine regeneration periods and service intervals.

The DPF software can be divided into three separate control software functions; a DPF supervisor function, a DPF fuel management function and a DPF air management function.

These three functions are controlled by a fourth software function known as the DPF co-ordinator function. The co-ordinator function manages the operation of the other functions when an active regeneration is requested.

DPF Fuel Management Function

The DPF fuel management function controls the following:

- Timing and quantity of the four split injections per stroke (pilot, main and two post injections)
- Injection pressure and the transition between the three different calibration levels of injection.

The fuel management calculates the quantity and timing for the four split injections, for each of the three calibration levels for injection pressure, and also manages the transition between the levels.

The two post injections are required to separate the functionality of increasing in-cylinder gas temperatures and the production of hydrocarbons. The first post injection is used to generate the higher in-cylinder gas temperature while simultaneously retaining the same engine torque output produced during normal (non-regeneration) engine operation. The second post injection is used to generate hydrocarbons by allowing unburnt fuel into the catalytic converter without producing increased engine torque.

DPF Air Management Function

The DPF air management function controls the following:

- EGR control
- Turbocharger boost pressure control
- Intake mass air flow.

DPF Co-ordinator Function

The DPF co-ordinator function reacts to a regeneration request from the supervisor function by initiating and co-ordinating the following DPF regeneration requests:

- EGR cut-off - except for overrun condition
- Turbocharger boost pressure control
- Engine load increase
- Control mass air flow
- Fuel injection control.

When the supervisor function issues a regeneration request, the co-ordinator function requests EGR cut-off and a regeneration specific turbocharger boost pressure control. It then waits for a feedback signal from the EGR system confirming that the EGR valve is closed.

When the EGR valve is closed, the co-ordinator function initiates requests to increase engine load by controlling the intake mass air flow.

Once confirmation is received that intake conditions are controlled or a calibration time has expired, the co-ordinator function then changes to a state awaiting an accelerator pedal release manoeuvre from the driver. If this occurs or a calibration time has expired, the co-ordinator function generates a request to control fuel injections to increase exhaust gas temperature.

DIFFERENTIAL PRESSURE SENSOR

As the amount of particulates trapped by the DPF increases, the pressure at the inlet side of the DPF increases in comparison to the DPF outlet. The DPF software uses this comparison, in conjunction with other data, to calculate the accumulated amount of trapped particulates.

By measuring the pressure difference between the DPF inlet and outlet and the DPF temperature, the DPF software can determine if the DPF is becoming blocked and requires regeneration.

COMPONENT DESCRIPTION

DIESEL PARTICULATE FILTER (DPF)

The DPF system reduces diesel particulate emissions to negligible levels to meet current standards for:

- European stage 5 and 6 emissions
- NAS LEV3 emissions

The particulate emissions are the black fumes emitted from the diesel engine under certain load conditions. The emissions are a complex mixture of solid and liquid components with the majority of the particulates being carbon microspheres on which hydrocarbons from the engine's fuel and lubricant condense.

The DPF system comprises the following components:

- Diesel Particulate Filter (DPF)
- DPF temperature sensors
- DPF control software incorporated in the ECM
- Differential pressure sensor.

The DPF is located in the exhaust system, downstream of the catalytic converter. Its function is to trap particulate matter in the exhaust gases leaving the engine. A major feature of the DPF is its ability for regeneration. Regeneration is the burning of particulates trapped by the filter to prevent obstruction to the free flow of exhaust gasses. The regeneration process takes place at calculated intervals and is not noticeable by the driver of the vehicle.

Regeneration is most important, since an overfilled filter can damage the engine through excessive exhaust back pressure and can itself be damaged or destroyed. The material trapped in the filter is in the most part carbon particles with some absorbed hydrocarbons.

The DPF uses a filter technology based on a filter with a catalytic coating. The DPF is made from silicon carbide housed in a steel container and has excellent thermal shock resistance and thermal conductivity properties. The DPF is designed for the engine's operating requirements to maintain the optimum back pressure requirements.

The porous surface of the filter consists of thousands of small parallel channels positioned in the longitudinal direction of the exhaust system. Adjacent channels in the filter are alternately plugged at the end. This design forces the exhaust gasses to flow through the porous filter walls, which act as the filter medium. Particulate matter which are too big to pass through the porous surface are collected and stored in the channels.

The collected particulate matter, if not removed, can create an obstruction to exhaust gas flow. The stored particles are removed by a regeneration process which incinerates the particles.

Diesel Particulate Filter (DPF) Temperature Sensors

The sensors measure the temperature of exhaust gas exiting the turbocharger and before it passes through the DPF and provides the information needed to calculate the DPF temperature.

The information is used, in conjunction with other data, to estimate the amount of accumulated particulates and to control the DPF temperature.

Instrument Cluster (IC) Indications

For drivers who make regular short journeys at low speeds, it may not be possible to efficiently regenerate the DPF. In this case, the DPF software will detect a blockage of the DPF from signals from the differential pressure sensor and will alert the driver as follows:

The driver will be alerted to this condition by a message 'EXHAUST FILTER NEARLY FULL'. See 'HANDBOOK'. As detailed in the Owners Handbook, the driver should drive the vehicle until the engine is at its normal operating temperature and then drive for approximately a further 20 minutes at speeds between 60 km/h to 120 km/h (40 mph to 70 mph). It is possible that the regeneration process will occur at lower speeds, but the events may take longer at a 48 km/h (30 mph) average speed. Successful regeneration of the DPF is indicated to the driver by the 'EXHAUST FILTER NEARLY FULL' message no longer being displayed. If the DPF software detects that the DPF is still blocked, the message will continue to be displayed or an additional message 'EXHAUST FILTER FULL VISIT DEALER' will be displayed. The driver should take the vehicle to an authorized dealer to have the DPF force regenerated using an approved diagnostic system.

If, due to vehicle usage and/or driving style, the active regeneration process cannot take place or is unable to regenerate the DPF, the dealer can force regenerate the DPF.

This is achieved by driving the vehicle until the engine is at its normal operating temperature and then driving for approximately a further 20 minutes at speeds between 60 km/h to 120 km/h (40 mph to 70 mph). It is possible that the regeneration process will occur at lower speeds, but the events may take longer at a 48 km/h (30 mph) average speed.

Diesel Particulate Filter (DPF) Side Effects

The following section details some side effects caused by the active regeneration process.

Engine Oil Dilution

Engine oil dilution can occur due to small amounts of fuel entering the engine crankcase during the post-injection phases. This has made it necessary to introduce a calculation based on driving style to reduce oil service intervals if necessary. The driver is alerted to the oil service by a message in the IC.

The DPF software monitors the driving style and the frequency of the active regeneration and duration. Using this information a calculation can be made on the engine oil dilution. When the DPF software calculates the engine oil dilution has reached a predetermined threshold (fuel being 7% of engine oil volume) a service message is displayed in the IC.

Depending on driving style, some vehicles may require an oil service before the designated interval. If a service message is displayed, the vehicle will be required have a full service and the service interval counter will be reset.

Fuel Consumption

During the active regeneration process of the DPF, there will be an increase in fuel consumption.

However, because active regeneration occurs infrequently, the overall effect on fuel consumption is approximately 2%. The additional fuel used during the active regeneration process is accounted for in the instantaneous and average fuel consumption displays in the IC.

DIFFERENTIAL PRESSURE SENSOR

The differential pressure sensor is used by the DPF software to monitor the condition of the DPF. Two pipe connections on the sensor are connected by pipes to the inlet and outlet ends of the DPF. The pipes allow the sensor to measure the inlet and outlet pressures of the DPF.

Aftermarket DPF Cleaning Fluids

Recent years have seen the introduction of 'DPF cleaning fluids' to (non JLR approved) aftermarket sales. These products claim to reduce the temperature that the soot reaction takes place. It should be stressed that, during the vehicle development activity, every effort is made to generate DPF regeneration temperatures whilst maintaining safe levels for all other vehicle components. Unauthorized use of the aftermarket fluids produces a significant risk to soot burn rates and DPF peak temperatures real world driving conditions. These fluids are not authorised for JLR use.

PUBLISHED: 08-JAN-2016
2015.0 RANGE ROVER (LG), 309-00

EXHAUST SYSTEM - TDV8 4.4L DIESEL

PRINCIPLES OF OPERATION

For a detailed description of the exhaust system, refer to the relevant description and operation section of the workshop manual. REFER to: (309-00D Exhaust System - TDV8 4.4L Diesel)

Exhaust System (Description and Operation),
Diesel Particulate Filter (Description and Operation),
Diesel Particulate Filter (Description and Operation).

INSPECTION AND VERIFICATION

1. Verify the customer concern.

1. Visually inspect for obvious signs of mechanical or electrical damage.

Visual Inspection

MECHANICAL	ELECTRICAL
▪ Diesel particulate filter ▪ Differential pressure sensor hoses ▪ Differential pressure sensor metal pipes and unions ▪ Differential pressure sensor mounting position integrity ▪ Metal fatigue ▪ Joints ▪ Mountings ▪ Clearance around components ▪ Damaged diesel particulate filter	▪ Differential pressure sensor ▪ Differential pressure sensor connector ▪ Differential pressure sensor wiring harness ▪ Electrical connector(s) ▪ Sensor(s) ▪ Engine control module

1. If an obvious cause for an observed or reported concern is found, correct the cause (if possible) before proceeding to the next step

1. If the cause is not visually evident, verify the symptom and refer to the symptom chart.

SYMPTOM CHART

SYMPTOM	POSSIBLE CAUSES	ACTION
Amber warning message on instrument cluster - DPF FULL REFER TO HANDBOOK -	▪ Diesel particulate filter has more than 24.5g of soot & a poor drive cycle	▪ If AMBER DPF FULL REFER TO HANDBOOK message is displayed or customer advises of amber, with no other reported messages the customer needs to be advised that the message is advisory only and that their current drive cycle does not allow the system to clean the particulate filter. No repair is required, if the vehicle is driven on a highway AS DIRECTED IN THE HANDBOOK then the light will be extinguished and the system self healed, nothing more than this is required. The message is illuminated when the diesel particulate filter has more than 24.5g of soot & a poor drive cycle, but the vehicles current drive cycle is predominately urban, or engine temperature does not reach 50degC this inhibits diesel particulate filter regeneration ▪ Diesel particulate filter regeneration procedure is described at the bottom of this section

DTC Index

For a list of Diagnostic Trouble Codes (DTCs) that could be logged on this vehicle, please refer to Section 100-00

NOTES:

- If the control module or a component is suspect and the vehicle remains under manufacturer warranty, refer to the Warranty Policy and Procedures manual (section B1.2), or determine if any prior approval programme is in operation, prior to the installation of a new module/component
- Generic scan tools may not read the codes listed, or may read only 5-digit codes. Match the 5 digits from the scan tool to the first 5 digits of the 7-digit code listed to identify the fault (the last 2 digits give extra information read by the manufacturer approved diagnostic system)
- Check and rectify basic faults before beginning diagnostic routines involving pinpoint tests
- Inspect connectors for signs of water ingress, and pins for damage and/or corrosion
- If DTCs are recorded and, after performing the pinpoint tests, a fault is not present, an intermittent concern may be the cause. Always check for loose connections and corroded terminals

DTC	DESCRIPTION	POSSIBLE CAUSE	ACTION

	P0030-11	HO2S Heater Control Circuit (Bank 1, Sensor 1) - Circuit short to ground	NOTE: - Circuit LPPH_A - ■ The engine control module has detected a ground measurement for a period longer than expected or has detected a ground measurement when another value was expected ■ Harness failure - Heated oxygen sensor heater control circuit short circuit to ground ■ Heated oxygen sensor failure	■ Using the manufacturer approved diagnostic system check datalogger signals, Oxygen Sensor (O2S) Heater Duty Cycle Bank 1 Sensor 1 (0x03A1). Refer to the electrical circuit diagrams and check the heated oxygen sensor heater control (heater ground) circuit for short circuit to ground. Repair harness as required. Clear DTC and retest ■ Check and install new heated oxygen sensor as required
	P0030-12	HO2S Heater Control Circuit (Bank 1, Sensor 1) - Circuit short to battery	NOTE: - Circuit LPPH_A - ■ The engine control module has detected a vehicle power measurement for a period longer than expected or has detected a vehicle power measurement when another value was expected ■ Harness failure - Heated oxygen sensor heater control circuit short circuit to power ■ Heated oxygen sensor failure	■ Using the manufacturer approved diagnostic system check datalogger signals, Oxygen Sensor (O2S) Heater Duty Cycle Bank 1 Sensor 1 (0x03A1). Refer to the electrical circuit diagrams and check the heated oxygen sensor heater control (heater ground) circuit for short circuit to power. Repair harness as required. Clear DTC and retest ■ Check and install new heated oxygen sensor as required
	P0030-13	HO2S Heater Control Circuit (Bank 1, Sensor 1) - Circuit open	NOTE: - Circuit LPPH_A -	■ Using the manufacturer approved diagnostic system check datalogger signals, Oxygen Sensor (O2S) Heater Duty Cycle Bank 1 Sensor 1 (0x03A1). Refer to the electrical circuit diagrams and check the heated oxygen sensor heater control

		▪ The engine control module has determined an open circuit via lack of bias voltage, low current flow, no change in the state of an input in response to an output ▪ Harness failure - Heated oxygen sensor heater control circuit open circuit ▪ Heated oxygen sensor failure	(heater ground) circuit for open circuit. Repair harness as required. Clear DTC and retest ▪ Check and install new heated oxygen sensor as required
P0030-4B	HO2S Heater Control Circuit (Bank 1, Sensor 1) - Over temperature	▪ The engine control module detected an internal temperature above the expected range ▪ Harness failure - Heated oxygen sensor heater control circuit short circuit to power ▪ Heated oxygen sensor failure	▪ Using the manufacturer approved diagnostic system check datalogger signals, Oxygen Sensor (O2S) Heater Duty Cycle Bank 1 Sensor 1 (0x03A1). Refer to the electrical circuit diagrams and check the heated oxygen sensor heater control (heater ground) circuit for short circuit to power. Repair harness as required. Clear DTC and retest ▪ Check and install new heated oxygen sensor as required
P0130-11	O2 Sensor Circuit (Bank 1 Sensor 1) - Circuit short to ground	**NOTE:** - Circuit LPV_A - ▪ The engine control module has detected a ground measurement for a period longer than expected or has detected a ground measurement when another value was expected ▪ Harness failure - Heated oxygen sensor circuit short circuit to ground ▪ Heated oxygen sensor component failure	▪ Refer to the electrical circuit diagrams and check the heated oxygen sensor circuits for short circuit to ground. Repair harness as required. Clear DTC and retest ▪ Check and install new heated oxygen sensor as required
P0130-12	O2 Sensor Circuit (Bank	**NOTE:**	▪ Refer to the electrical circuit diagrams and check the heated oxygen sensor circuits for

	1 Sensor 1) - Circuit short to battery	- Circuit LPV_A - ▪ The engine control module has detected a vehicle power measurement for a period longer than expected or has detected a vehicle power measurement when another value was expected ▪ Harness failure - Heated oxygen sensor circuit short circuit to power ▪ Heated oxygen sensor component failure	short circuit to power. Repair harness as required. Clear DTC and retest ▪ Check and install new heated oxygen sensor as required
P0130-13	O2 Sensor Circuit (Bank 1 Sensor 1) - Circuit open	**NOTE:** - Circuit LPPC_A - LPV_A - ▪ The engine control module has determined an open circuit via lack of bias voltage, low current flow, no change in the state of an input in response to an output ▪ Harness failure - Heated oxygen sensor circuit open circuit ▪ Heated oxygen sensor component failure	▪ Refer to the electrical circuit diagrams and check the heated oxygen sensor circuits for open circuit. Repair harness as required. Clear DTC and retest ▪ Check and install new heated oxygen sensor as required
P0130-26	O2 Sensor Circuit (Bank 1 Sensor 1) - Signal rate of change below threshold	▪ The signal transitions more slowly than is reasonably allowed ▪ Exhaust system leak ▪ Fuel control system failure	▪ Check for and rectify any exhaust leak between cylinder head and catalytic converter. Check heated oxygen sensor is correctly installed in exhaust manifold ▪ Check fuel control system for related DTCs and refer to the relevant DTC index ▪ Refer to the electrical circuit diagrams and check heated oxygen sensor to engine

		▪ Heated oxygen sensor to engine control module circuit short circuit to ground, short circuit to power, high resistance ▪ Heated oxygen sensor failure	control module circuit for short circuit to ground, short circuit to power, high resistance, open circuit. Repair harness as required. Clear DTC and retest ▪ Check and install new heated oxygen sensor as required
P0133-00	O2 Sensor Circuit Slow Response (Bank 1 Sensor 1) - No sub type information	▪ Exhaust system leak ▪ Fuel control system failure ▪ Heated oxygen sensor to engine control module wiring shield high resistance ▪ Heated oxygen sensor failure	▪ Check for and rectify any exhaust leak between cylinder head and catalytic converter. Check heated oxygen sensor is correctly installed in exhaust manifold ▪ Check fuel control system for related DTCs and refer to the relevant DTC index ▪ Refer to the electrical circuit diagrams and check heated oxygen sensor to engine control module wiring shield for high resistance. Repair harness as required. Clear DTC and retest ▪ Check and install new heated oxygen sensor as required
P0426-00	Catalyst Temperature Sensor Circuit Range /Performance (Bank 1, Sensor Circuit 1) - No sub type information	**NOTE:** - Circuit CCCIT_A - ▪ Exhaust gas temperature sensor pre catalytic converter circuit, short circuit to ground, open circuit, high resistance ▪ Exhaust gas temperature sensor pre catalytic converter failure	▪ Refer to the electrical circuit diagrams and check exhaust gas temperature sensor pre catalytic converter circuit for short circuit to ground, open circuit, high resistance ▪ Clear the DTC and retest ▪ Check and install new exhaust gas temperature sensor pre catalytic converter as required
P0427-00	Catalyst Temperature Sensor Circuit Low (Bank 1, Sensor Circuit 1) - No sub type information	**NOTE:** - Circuit CCCIT_A - ▪ Exhaust gas temperature sensor pre catalytic converter circuit, short circuit to ground	▪ Refer to the electrical circuit diagrams and check exhaust gas temperature sensor pre catalytic converter circuit for short circuit to ground ▪ Clear the DTC and retest ▪ Check and install new exhaust gas temperature sensor pre catalytic converter as required

		▪ Exhaust gas temperature sensor pre catalytic converter failure	
P0428-00	Catalyst Temperature Sensor Circuit High (Bank 1, Sensor Circuit 1) - No sub type information	**NOTE:** - Circuit CCCIT_A - ▪ Exhaust gas temperature sensor pre catalytic converter circuit, short circuit to power, open circuit, high resistance ▪ Exhaust gas temperature sensor pre catalytic converter failure	▪ Refer to the electrical circuit diagrams and check exhaust gas temperature sensor pre catalytic converter circuit for short circuit to power, open circuit, high resistance ▪ Clear the DTC and retest ▪ Check and install new exhaust gas temperature sensor pre catalytic converter as required
P042B-00	Catalyst Temperature Sensor Circuit Range /Performance (Bank1, Sensor Circuit 2) - No sub type information	**NOTE:** - Circuit CCCOT_A - ▪ Exhaust gas temperature sensor post catalytic converter short circuit to ground, open circuit, high resistance ▪ Exhaust gas temperature sensor post catalytic converter failure	▪ Refer to the electrical circuit diagrams and check exhaust gas temperature sensor post catalytic converter circuit for short circuit to ground, open circuit, high resistance ▪ Check and install new exhaust gas temperature sensor post catalytic converter as required
P042C-00	Catalyst Temperature Sensor Circuit Low (Bank 1, Sensor Circuit 2) - No sub type information	**NOTE:** - Circuit CCCOT_A - ▪ Exhaust gas temperature sensor post catalytic converter short circuit to ground, open circuit, high resistance	▪ Refer to the electrical circuit diagrams and check exhaust gas temperature sensor post catalytic converter circuit for short circuit to ground, open circuit, high resistance ▪ Check and install new exhaust gas temperature sensor post catalytic converter as required

		▪ Exhaust gas temperature sensor post catalytic converter failure	
P042D-00	Catalyst Temperature Sensor Circuit High (Bank 1, Sensor Circuit 2) - No sub type information	**NOTE:** - Circuit CCCOT_A - ▪ Exhaust gas temperature sensor post catalytic converter short circuit to power, open circuit, high resistance ▪ Exhaust gas temperature sensor post catalytic converter failure	▪ Refer to the electrical circuit diagrams and check exhaust gas temperature sensor post catalytic converter circuit for short circuit to power, open circuit, high resistance ▪ Check and install new exhaust gas temperature sensor post catalytic converter as required
P0435-00	Catalyst Temperature Sensor Circuit (Bank 2, Sensor Circuit 1) - No sub type information	**NOTE:** - Circuit STOT - ▪ Exhaust gas temperature sensor post turbocharger circuit, short circuit to power ▪ Exhaust gas temperature sensor post turbocharger circuit, short circuit to ground ▪ Exhaust gas temperature sensor post turbocharger circuit, open circuit ▪ Exhaust gas temperature sensor post turbocharger circuit, high resistance ▪ Exhaust gas temperature sensor post turbocharger circuit, disconnected ▪ Exhaust gas temperature sensor post turbocharger failure	▪ Refer to the electrical circuit diagrams and check exhaust gas temperature sensor post turbocharger circuit, for short circuit to power ▪ Refer to the electrical circuit diagrams and check exhaust gas temperature sensor post turbocharger circuit, for short circuit to ground ▪ Refer to the electrical circuit diagrams and check exhaust gas temperature sensor post turbocharger circuit, for open circuit ▪ Refer to the electrical circuit diagrams and check exhaust gas temperature sensor post turbocharger circuit, for high resistance ▪ Refer to the electrical circuit diagrams and check exhaust gas temperature sensor post turbocharger circuit, for disconnected ▪ Check and install new exhaust gas temperature sensor post turbocharger as required

P0436-00	Catalyst Temperature Sensor Circuit Range /Performance (Bank 2, Sensor Circuit 1) - No sub type information	NOTE: - Circuit STOT - ▪ Exhaust gas temperature sensor post turbocharger circuit, short circuit to power, short circuit to ground, open circuit ▪ Exhaust gas temperature sensor post turbocharger failure	▪ Refer to the electrical circuit diagrams and check exhaust gas temperature sensor post turbocharger circuit for short circuit to power, short circuit to ground, open circuit ▪ Check and install new exhaust gas temperature sensor post turbocharger as required
P0436-16	Catalyst Temperature Sensor Circuit Range /Performance (Bank 2, Sensor Circuit 1) - Circuit voltage below threshold	NOTE: - Circuit STOT - ▪ The engine control module measured a voltage below a specified range but not necessarily a short circuit to ground ▪ Exhaust gas temperature sensor post turbocharger circuit, short circuit ground ▪ Exhaust gas temperature sensor post turbocharger failure	▪ Refer to the electrical circuit diagrams and check exhaust gas temperature sensor post turbocharger circuit for short circuit to ground ▪ Check and install new exhaust gas temperature sensor post turbocharger as required
P0437-00	Catalyst Temperature Sensor Circuit Low (Bank 2, Sensor Circuit 1) - No sub type information	NOTE: - Circuit STOT - ▪ Exhaust gas temperature sensor post turbocharger circuit, short circuit to ground	▪ Refer to the electrical circuit diagrams and check exhaust gas temperature sensor post turbocharger circuit for short circuit to ground ▪ Check and install new exhaust gas temperature sensor post turbocharger required

		▪ Exhaust gas temperature sensor post turbocharger failure	
P0438-00	Catalyst Temperature Sensor Circuit High (Bank 2, Sensor Circuit 1) - No sub type information	NOTE: - Circuit STOT - ▪ Exhaust gas temperature sensor post turbocharger circuit, short circuit to power ▪ Exhaust gas temperature sensor post turbocharger failure	▪ Refer to the electrical circuit diagrams and check exhaust gas temperature sensor post turbocharger circuit, for short circuit to power ▪ Check and install new exhaust gas temperature sensor post turbocharger as required
P0544-00	Exhaust Gas Temperature Sensor Circuit - Bank 1 Sensor 1 - No sub type information	NOTE: - Circuit CCCIT_A - ▪ Exhaust gas temperature sensor pre catalytic converter circuit, short circuit to ground, open circuit, high resistance ▪ Exhaust gas temperature sensor pre catalytic converter failure	▪ Refer to the electrical circuit diagrams and check exhaust gas temperature sensor pre catalytic converter circuit for short circuit to ground, open circuit, high resistance ▪ Clear the DTC and retest ▪ Check and install new exhaust gas temperature sensor pre catalytic converter as required
P0547-00	Exhaust Gas Temperature Sensor Circuit - Bank 2 Sensor 1 - No sub type information	NOTE: - Circuit STOT - ▪ Exhaust gas temperature sensor post turbocharger short circuit to ground	▪ Refer to the electrical circuit diagrams and check exhaust gas temperature sensor post turbocharger circuit for short circuit to ground ▪ Clear the DTC and retest ▪ Check and install new exhaust gas temperature sensor post turbocharger as required

		▪ Exhaust gas temperature sensor post turbocharger failure	
P0548-00	Exhaust Gas Temperature Sensor Circuit Low - Bank 2 Sensor 1 - No sub type information	NOTE: - Circuit STOT - ▪ Exhaust gas temperature sensor post turbocharger short circuit to ground ▪ Exhaust gas temperature sensor post turbocharger failure	▪ Refer to the electrical circuit diagrams and check exhaust gas temperature sensor post turbocharger circuit for short circuit to ground ▪ Clear the DTC and retest ▪ Check and install new exhaust gas temperature sensor post turbocharger as required
P0549-00	Exhaust Gas Temperature Sensor Circuit High - Bank 2 Sensor 1 - No sub type information	NOTE: - Circuit STOT - ▪ Exhaust gas temperature sensor post turbocharger short circuit short circuit to power, open circuit, high resistance ▪ Exhaust gas temperature sensor post turbocharger failure	▪ Refer to the electrical circuit diagrams and check exhaust gas temperature sensor post turbocharger circuit for short circuit to power, open circuit, high resistance ▪ Clear the DTC and retest ▪ Check and install new exhaust gas temperature sensor post turbocharger as required
P2031-00	Exhaust Gas Temperature Sensor Circuit Bank 1 Sensor 2 - No sub type information	NOTE: - Circuit CCCOT_A - ▪ Exhaust gas temperature sensor post catalytic converter short circuit to ground	▪ Refer to the electrical circuit diagrams and check exhaust gas temperature sensor post catalytic converter circuit for short circuit to ground ▪ Check and install new exhaust gas temperature sensor post catalytic converter as required

		▪ Exhaust gas temperature sensor post catalytic converter failure	
P2080-16	Exhaust Gas Temperature Sensor Circuit Range /Performance Bank 1 Sensor 1 - Circuit voltage below threshold	NOTE: - Circuit CCCIT_A - ▪ The engine control module measured a voltage below a specified range but not necessarily a short circuit to ground ▪ Harness failure - Exhaust gas temperature sensor pre catalytic converter ▪ Exhaust gas temperature sensor pre catalytic converter failure	▪ This DTC is set when there is a plausibility error on the signal from the exhaust gas temperature sensor pre catalytic converter. Refer to the workshop manual and check the exhaust gas temperature sensor pre catalytic converter and wiring harness for obvious signs of mechanical damage due to chaffing or heat. The exhaust gas temperature sensor pre catalytic converter is a thermistor with a signal and ground connection. Refer to the electrical circuit diagrams and check the signal circuit for open circuit, short circuit to power, short circuit to ground, high resistance. Check the ground circuit for open circuit, high resistance, short circuit to power. Repair the wiring harness as required ▪ Check and install new exhaust gas temperature sensor pre catalytic converter as required
P2082-00	Exhaust Gas Temperature Sensor Circuit Range /Performance Bank 2 Sensor 1 - No sub type information	NOTE: - Circuit STOT - ▪ Exhaust gas temperature sensor post turbocharger short circuit short circuit to ground, open circuit, high resistance ▪ Exhaust gas temperature sensor post turbocharger failure	▪ Refer to the electrical circuit diagrams and check exhaust gas temperature sensor post turbocharger circuit for short circuit to ground, open circuit, high resistance ▪ Clear the DTC and retest ▪ Check and install new exhaust gas temperature sensor post turbocharger as required
P2084-16	Exhaust Gas Temperature Sensor Circuit Range /Performance Bank 1 Sensor 2 - Circuit	NOTE: - Circuit CCCOT_A -	▪ Refer to the electrical circuit diagrams and check exhaust gas temperature sensor post catalytic converter circuit for short circuit to ground ▪ Check and install new exhaust gas temperature sensor post catalytic converter as required

	voltage below threshold	▪ The engine control module measured a voltage below a specified range but not necessarily a short circuit to ground ▪ Exhaust gas temperature sensor post catalytic converter circuit, short circuit to ground ▪ Exhaust gas temperature sensor post catalytic converter failure	
P2177-00	System Too Lean Off Idle - Bank 1 - No sub type information	▪ Oxygen concentration implausibly high ▪ Heated oxygen sensor circuit short circuit to ground, short circuit to power, high resistance, open circuit ▪ Heated oxygen sensor failure	▪ Check for excess fuel at exhaust manifold, downpipe, heated oxygen sensor ▪ Check for fuel / injector related DTCs and repair these first. Clear DTC and retest ▪ Refer to the electrical circuit diagrams and check heated oxygen sensor for short circuit to ground, high resistance, open circuit. Repair harness as required. Clear DTC and retest ▪ Check and install new heated oxygen sensor as required
P2178-00	System Too Rich Off Idle - Bank 1 - No sub type information	▪ Oxygen concentration implausibly low ▪ Heated oxygen sensor circuit short circuit to ground, short circuit to power, high resistance, open circuit ▪ Heated oxygen sensor failure	▪ Check for air leaks at exhaust manifold, downpipe, heated oxygen sensor ▪ Check for fuel / injector related DTCs and repair these first. Clear DTC and retest ▪ Refer to the electrical circuit diagrams and check heated oxygen sensor for short circuit to ground, high resistance, open circuit. Repair harness as required. Clear DTC and retest ▪ Check and install new heated oxygen sensor as required
P2191-00	System Too Lean at Higher Load - Bank 1 - No sub type information	▪ Oxygen concentration implausibly high ▪ Heated oxygen sensor circuit short circuit to ground, short circuit to power, high resistance, open circuit ▪ Heated oxygen sensor failure	▪ Check for excess fuel at exhaust manifold, downpipe, heated oxygen sensor ▪ Check for fuel / injector related DTCs and repair these first. Clear DTC and retest ▪ Refer to the electrical circuit diagrams and check heated oxygen sensor for short circuit to ground, high resistance, open circuit. Repair harness as required. Clear DTC and retest ▪ Check and install new heated oxygen sensor as required

P2192-00	System Too Rich at Higher Load - Bank 1 - No sub type information	▪ Oxygen concentration implausibly low ▪ Heated oxygen sensor circuit short circuit to ground, short circuit to power, high resistance, open circuit ▪ Heated oxygen sensor failure	▪ Check for air leaks at exhaust manifold, downpipe, heated oxygen sensor ▪ Check for fuel / injector related DTCs and repair these first. Clear DTC and retest ▪ Refer to the electrical circuit diagrams and check heated oxygen sensor for short circuit to ground, high resistance, open circuit. Repair harness as required. Clear DTC and retest ▪ Check and install new heated oxygen sensor as required
P2195-00	O2 Sensor Signal Biassed /Stuck Lean - Bank 1, Sensor 1 - No sub type information	▪ Air leak at exhaust manifold, downpipe, heated oxygen sensor bank 1 ▪ Heated oxygen sensor circuit short circuit to ground, short circuit to power, high resistance, open circuit ▪ Heated oxygen sensor failure	▪ Check for fuel / injector related DTCs and repair these first. Clear DTC and retest ▪ Check for air leaks at exhaust manifold, downpipe, heated oxygen sensor ▪ Refer to the electrical circuit diagrams and check heated oxygen sensor for short circuit to ground, high resistance, open circuit. Repair harness as required. Clear DTC and retest ▪ Check and install new heated oxygen sensor as required
P2245-00	O2 Sensor Reference Voltage Circuit Low - Bank 1, Sensor 1 - No sub type information	**NOTE:** - Circuit LPV_A - ▪ Harness failure - Heated oxygen sensor circuit ▪ Oxygen sensor failure	▪ This DTC is set if the engine control module detects the bank 1, heated oxygen sensor 1 reference voltage is lower than expected. Refer to the electrical circuit diagrams and check the heated oxygen sensor circuits for open circuits, high resistance, short circuit to ground. Repair harness as required. Clear DTC and retest ▪ Check and install new heated oxygen sensor as required
P2246-00	O2 Sensor Reference Voltage Circuit High - Bank 1, Sensor 1 - No sub type information	**NOTE:** - Circuit LPV_A - ▪ Harness failure - Heated oxygen sensor circuit ▪ Oxygen sensor failure	▪ This DTC is set if the engine control module detects the bank 1, heated oxygen sensor 1 reference voltage is greater than expected. Refer to the electrical circuit diagrams and check the heated oxygen sensor circuits for open circuits, high resistance, short circuit to power. Repair harness as required. Clear DTC and retest ▪ Check and install new heated oxygen sensor as required
P2297-00	O2 Sensor Out of Range	▪ Heated oxygen sensor circuit short	▪ Check for fuel / injector related DTCs and repair these first. Clear DTC and retest.

	During Deceleration Bank 1, Sensor 1 - No sub type information	circuit to ground, short circuit to power, high resistance, open circuit ▪ Heated oxygen sensor failure	Refer to the electrical circuit diagrams and check heated oxygen sensor for short circuit to ground, high resistance, open circuit. Repair harness as required. Clear DTC and retest ▪ Check and install new heated oxygen sensor as required
P242A-00	Exhaust Gas Temperature Sensor Circuit Bank 1 Sensor 3 - No sub type information	NOTE: - Circuit PFOT - ▪ Harness failure - Exhaust gas temperature sensor post DPF ▪ Exhaust gas temperature sensor post DPF failure	▪ Using the manufacturer approved diagnostic system check datalogger signals, Exhaust Gas Temperature Bank 1 Sensor 3 (0x03C8), Exhaust Gas Temperature Bank 1 Sensor 3 Voltage (0x03F6). This DTC is set if the exhaust gas temperature sensor post DPF fails a cold start diagnostic check by the engine control module. Refer to the electrical circuit diagrams and check the exhaust gas temperature sensor post DPF signal circuit for open circuit, short circuit to ground, short circuit to other circuits. Check the sensor ground circuit for open circuit, short circuit to power, high resistance. Repair harness as required ▪ Check and install new exhaust gas temperature sensor post DPF as required
P242B-16	Exhaust Gas Temperature Sensor Circuit Range /Performance Bank 1 Sensor 3 - Circuit voltage below threshold	NOTE: - Circuit PFOT - ▪ The engine control module measured a voltage below a specified range but not necessarily a short circuit to ground ▪ Harness failure - Exhaust gas temperature sensor post DPF ▪ exhaust gas temperature sensor post DPF failure	▪ This DTC is set if the exhaust gas temperature sensor post DPF fails a cold start diagnostic check by the engine control module ▪ Refer to the workshop manual and check the exhaust gas temperature sensor post DPF for obvious signs of damage ▪ Check the sensor harness for chaffing or heat damage ▪ Using the manufacturer approved diagnostic system check datalogger signals, Exhaust Gas Temperature Bank 1 Sensor 3 (0x03F6), Exhaust Gas Temperature Bank 1 Sensor 3 Voltage (0x03C8) ▪ Refer to the electrical circuit diagrams and check the exhaust gas temperature sensor post DPF signal circuit for open circuit, short circuit to ground, short to other circuits. Check the sensor ground circuit for open circuit, short circuit to power, high resistance. Repair wiring as required ▪ Check and install new exhaust gas temperature sensor post DPF as required
P242B-64	Exhaust Gas Temperature Sensor Circuit Range /Performance Bank 1 Sensor 3 -	NOTE: - Circuit PFOT -	▪ Using the manufacturer approved diagnostic system check datalogger signals, Exhaust Gas Temperature Bank 1 Sensor 3 (0x03C8), Exhaust Gas Temperature Bank 1 Sensor 3 Voltage (0x03F6). This DTC is set if the exhaust gas temperature sensor post DPF fails a

	Signal plausibility failure	▪ Harness failure - Exhaust gas temperature sensor post DPF ▪ Exhaust gas temperature sensor post DPF failure	cold start diagnostic check by the engine control module. Refer to the electrical circuit diagrams and check the exhaust gas temperature sensor post DPF signal circuit for open circuit, short circuit to ground, short circuit to other circuits. Check the sensor ground circuit for open circuit, short circuit to power, high resistance. Repair harness as required ▪ Check and install new exhaust gas temperature sensor post DPF as required
P242C-00	Exhaust Gas Temperature Sensor Circuit Low Bank 1 Sensor 3 - No sub type information	NOTE: - Circuit PFOT - ▪ Harness failure - Exhaust gas temperature sensor post DPF ▪ Exhaust gas temperature sensor post DPF failure	▪ Using the manufacturer approved diagnostic system check datalogger signals, Exhaust Gas Temperature Bank 1 Sensor 3 (0x03C8), Exhaust Gas Temperature Bank 1 Sensor 3 Voltage (0x03F6). This DTC is set if the exhaust gas temperature sensor post DPF signal voltage is less than the engine control module was expecting. Refer to the electrical circuit diagrams and check the exhaust gas temperature sensor post DPF signal circuit for open circuit, short circuit to ground, short circuit to other circuits. Check the sensor ground circuit for open circuit, short circuit to power, high resistance. Repair harness as required ▪ Check and install new exhaust gas temperature sensor post DPF as required
P242D-17	Exhaust Gas Temperature Sensor Circuit High Bank 1 Sensor 3 - Circuit voltage above threshold	NOTE: - Circuit PFOT - ▪ The engine control module measured a voltage above a specified range but not necessarily a short circuit to power ▪ Exhaust gas temperature sensor post DPF circuit, short circuit to power, open circuit ▪ Exhaust gas temperature sensor post DPF failure	▪ Using the manufacturer approved diagnostic system check datalogger signals, Exhaust Gas Temperature Bank 1 Sensor 3 (0x03C8), Exhaust Gas Temperature Bank 1 Sensor 3 Voltage (0x03F6) ▪ Refer to the electrical circuit diagrams and check the exhaust gas temperature sensor post DPF circuit, for short circuit to power, open circuit ▪ Check and install new exhaust gas temperature sensor post DPF as required
P244A-00	Diesel Particulate Filter Differential Pressure Too Low (Bank 1) - No sub	▪ Diagnostic failure check for minimum pressure differential characteristics ▪ Diesel particulate filter internal	NOTE: If this DTC is logged, refer to the relevant pinpoint tests in Section 309-00 (Exhaust System)

		type information	components are missing or destroyed	▪ Using the manufacturer approved diagnostic system, check for related DTCs and refer to the relevant DTC index ▪ Clear DTC and re-test ▪ Check and install new diesel particulate filter as required

	P244A-95	Diesel Particulate Filter Differential Pressure Too Low (Bank1) - Incorrect assembly	**NOTE:**
			Differential pressure sensor hoseline mounting check. Differential pressure sensor high pressure hoseline disconnected or differential pressure reading low
			▪ The engine control module has detected that the component has been incorrectly installed e.g. hydraulic pipes crossed over, circuits cross wired or polarity errors
			▪ In cold climates differential pressure sensor hose lines or metal pipes may be frozen
			▪ Differential pressure sensor crossed hose lines
			▪ Differential pressure sensor dropped top hose line
			▪ Differential pressure sensor hose lines deteriorated
			▪ Differential pressure sensor circuit short circuit to ground, short circuit to power, open circuit, high resistance
				NOTE:
				If this DTC is logged, refer to the relevant pinpoint tests in Section 309-00 (Exhaust System)
				▪ Diagnosis of this DTC may require using the manufacturer approved diagnostic system check datalogger signals
				  ▪ 0x03DB Particulate Filter Differential Pressure Sensor Voltage - Bank 1 - Volts
				▪ Check differential pressure sensor hose lines are not frozen
				▪ Check differential pressure sensor hose lines are installed correctly
				▪ Check differential pressure sensor hose lines for mechanical integrity
				▪ Refer to the electrical circuit diagrams and check the differential pressure sensor circuit for short circuit to ground, short circuit to power, open circuit, high resistance
				▪ Inspect connectors for signs of water ingress, and pins for damage and/or corrosion
				▪ Check and install a new differential pressure sensor as required
				  ▪ Using the manufacturer approved diagnostic system carry out 'Diesel particulate filter differential pressure sensor replacement' routine (0x405B_02)
				▪ Using the manufacturer approved diagnostic system clear all stored DTCs using the Diagnosis Menu tab and retest

		▪ Connector is disconnected, connector pin is backed out, connector pin corrosion ▪ Differential pressure sensor failure	
P244B-68	Diesel Particulate Filter Differential Pressure Too High (Bank 1) - Event information	▪ Engine protection back pressure high ▪ Sudden increases in differential pressure across the diesel particulate filter	**NOTE:** This DTC when logged on its own is advisory only and no further action should be taken ▪ Using the manufacturer approved diagnostic system, check for related DTCs. If this DTC exists with any other diesel particulate filter differential pressure sensor DTCs, follow the advise given for that DTC
P2452-95	Diesel Particulate Filter Pressure Sensor A Circuit - Incorrect assembly	**NOTE:** In cold climates differential pressure sensor hose lines or metal pipes may be frozen ▪ Differential pressure sensor hoses connected incorrectly ▪ Differential pressure sensor hoses crushed, blocked, split	**NOTE:** If a new diesel particulate filter pressure sensor or hose lines have been installed or incorrectly routed, or any pressure sensor circuit repairs carried out, the engine control module must learn and store the new diesel particulate filter pressure sensor offset value. The following conditions must be met to allow the diesel particulate filter pressure sensor offset value to be learnt and stored: Using the manufacturer approved diagnostic system, clear DTCs from engine control module, then monitor the datalogger signal 'sump oil temperature - measured' ensuring a minimum of 50 degrees C is achieved. Start engine, run above 500RPM for 2 minutes, then a further 30 seconds at idle. Ensure the engine cooling fan is not running. Set vehicle in park and set ignition status to off. Wait 30 seconds for the engine control module to power down, learn and store diesel particulate filter pressure sensor offset value. This process must be carried out six times, to allow a large negative offset value to adapt back to 0 Hpa ▪ Using the manufacturer approved diagnostic system check datalogger signals, Particulate Filter Differential

			Pressure Sensor Voltage - Bank 1 (0x03DB). Refer to the workshop manual and check differential pressure sensor hoses are installed correctly ▪ Check differential pressure sensor hoses for crushed, blockage, split
P2453-00	Diesel Particulate Filter Pressure Sensor A Circuit Range /Performance - No sub type information	NOTE: - Circuit DPS - ▪ Harness failure - Differential pressure sensor ▪ Differential pressure sensor failure	NOTE: If a new diesel particulate filter pressure sensor or hose lines have been installed or incorrectly routed, or any pressure sensor circuit repairs carried out, the engine control module must learn and store the new diesel particulate filter pressure sensor offset value. The following conditions must be met to allow the diesel particulate filter pressure sensor offset value to be learnt and stored: Using the manufacturer approved diagnostic system, clear DTCs from engine control module, then monitor the datalogger signal 'sump oil temperature - measured' ensuring a minimum of 50 degrees C is achieved. Start engine, run above 500RPM for 2 minutes, then a further 30 seconds at idle. Ensure the engine cooling fan is not running. Set vehicle in park and set ignition status to off. Wait 30 seconds for the engine control module to power down, learn and store diesel particulate filter pressure sensor offset value. This process must be carried out six times, to allow a large negative offset value to adapt back to 0 Hpa ▪ Using the manufacturer approved diagnostic system check datalogger signals, Particulate Filter Differential Pressure Sensor Voltage - Bank 1 (0x03DB). This DTC is set when the particulate pressure sensor fails a plausibility check. Refer to the electrical circuit diagrams and check the differential pressure sensor signal circuit for open circuit, short circuit to ground, short circuit to other circuits. Check the sensor ground circuit for open circuit, short circuit to power, high resistance. Check the sensor power supply circuit for open circuit, short circuit to ground, high resistance. Repair harness as required ▪ Check and install new differential pressure sensor as required
P2454-00	Diesel Particulate	NOTE:	NOTE:

	Filter Pressure Sensor A Circuit Low - No sub type information	- Circuit DPS - ■ Harness failure - Differential pressure sensor ■ Differential pressure sensor crossed hose lines ■ Differential pressure sensor failure	If a new diesel particulate filter pressure sensor or hose lines have been installed or incorrectly routed, or any pressure sensor circuit repairs carried out, the engine control module must learn and store the new diesel particulate filter pressure sensor offset value. The following conditions must be met to allow the diesel particulate filter pressure sensor offset value to be learnt and stored: Using the manufacturer approved diagnostic system, clear DTCs from engine control module, then monitor the datalogger signal 'sump oil temperature - measured' ensuring a minimum of 50 degrees C is achieved. Start engine, run above 500rpm for 2 minutes, then a further 30 seconds at idle. Ensure the engine cooling fan is not running. Set vehicle in park and set ignition status to off. Wait 30 seconds for the engine control module to power down, learn and store diesel particulate filter pressure sensor offset value. This process must be carried out six times, to allow a large negative offset value to adapt back to 0 Hpa ■ Using the manufacturer approved diagnostic system check datalogger signals, Particulate Filter Differential Pressure Sensor Voltage - Bank 1 (0x03DB). This DTC is set when the particulate pressure sensor voltage is less than the threshold set in the engine control module diagnostic check. Refer to the electrical circuit diagrams and check the differential pressure sensor signal circuit for open circuit, short circuit to ground, short circuit to other circuits. Check the sensor ground circuit for open circuit, short circuit to power, high resistance. Check the sensor power supply circuit for open circuit, short circuit to ground, high resistance. Repair harness as required ■ Check differential pressure sensor hose lines are installed correctly ■ Check and install new differential pressure sensor as required	
P2455-00	Diesel Particulate Filter Pressure Sensor A Circuit High - No sub type information	NOTE: - Circuit DPS -	NOTE: If a new diesel particulate filter pressure sensor or hose lines have been installed or incorrectly routed, or any pressure sensor circuit repairs carried out, the engine control module must learn and store the new	

			▪ Harness failure - Differential pressure sensor ▪ Differential pressure sensor failure ▪ Exhaust back pressure is too high	diesel particulate filter pressure sensor offset value. The following conditions must be met to allow the diesel particulate filter pressure sensor offset value to be learnt and stored: Using the manufacturer approved diagnostic system, clear DTCs from engine control module, then monitor the datalogger signal 'sump oil temperature - measured' ensuring a minimum of 50 degrees C is achieved. Start engine, run above 500RPM for 2 minutes, then a further 30 seconds at idle. Ensure the engine cooling fan is not running. Set vehicle in park and set ignition status to off. Wait 30 seconds for the engine control module to power down, learn and store diesel particulate filter pressure sensor offset value. This process must be carried out six times, to allow a large negative offset value to adapt back to 0 Hpa ▪ Using the manufacturer approved diagnostic system, check engine control module, for related DTCs and refer to the relevant DTC index ▪ Using the manufacturer approved diagnostic system check datalogger signals, Particulate Filter Differential Pressure Sensor Voltage - Bank 1 (0x03DB). This DTC is set when the particulate pressure sensor voltage is greater than the threshold set in the engine control module diagnostic check. Refer to the electrical circuit diagrams and check the differential pressure sensor signal circuit for open circuit, short circuit to power, short circuit to other circuits. Check the sensor ground circuit for open circuit, short circuit to power, high resistance. Check the sensor power supply circuit for open circuit, short circuit to ground, high resistance. Repair harness as required ▪ Check and install new differential pressure sensor as required
	P2456-00	Diesel Particulate Filter Pressure Sensor A Circuit Intermittent /Erratic - No sub type information	▪ Differential pressure sensor circuit short circuit to ground, short circuit to power, open circuit, high resistance ▪ In cold climate or off road driving differential pressure sensor hoses crushed, blocked, split	**NOTE:** If a new diesel particulate filter pressure sensor or hose lines have been installed or incorrectly routed, or any pressure sensor circuit repairs carried out, the engine control module must learn and store the new diesel particulate filter pressure sensor offset value. The following conditions must be met to allow the diesel particulate filter pressure

		▪ Differential pressure sensor failure	sensor offset value to be learnt and stored: Using the manufacturer approved diagnostic system, clear DTCs from engine control module, then monitor the datalogger signal 'sump oil temperature - measured' ensuring a minimum of 50 degrees C is achieved. Start engine, run above 500RPM for 2 minutes, then a further 30 seconds at idle. Ensure the engine cooling fan is not running. Set vehicle in park and set ignition status to off. Wait 30 seconds for the engine control module to power down, learn and store diesel particulate filter pressure sensor offset value. This process must be carried out six times, to allow a large negative offset value to adapt back to 0 Hpa ▪ Refer to the electrical circuit diagrams and check differential pressure sensor circuit for short circuit to ground, short circuit to power, open circuit, high resistance ▪ Inspect connectors for signs of water ingress, and pins for damage and/or corrosion ▪ Check differential pressure sensor hoses for crushed, blocked, split ▪ Check and replace diesel particulate filter differential pressure sensor as required
P2458-66	Diesel Particulate Filter Regeneration Duration (Bank 1) - Signal has too many transitions / events	▪ Permanent regeneration	**NOTE:** This code is enabled for JLR engineering detailed diagnostics only. No further action should be taken ▪ Using the manufacturer approved diagnostic system, check for related DTCs and refer to the relevant DTC index
P2459-65	Diesel Particulate Filter Regeneration Frequency (Bank 1) - Signal has too few transitions / events	▪ Blocked regeneration ▪ Customer driving routine does not allow the system to clean the particulate filter	**NOTE:** If DTC is P2459-65 or AMBER DPF FULL REFER TO HANDBOOK message is displayed with no other reported messages. No repair is required, if the vehicle is driven on a highway AS DIRECTED IN THE HANDBOOK then the light will be extinguished and the system self healed, nothing more than this is required

			▪ Refer to the diesel particulate filter regeneration procedure and carry out a diesel particulate filter regeneration ▪ Advise customer of driving routine required to regenerate diesel particulate filter as stated in the vehicle handbook
P2463-00	Diesel Particulate Filter Restriction - Soot Accumulation (Bank 1) - No sub type information	▪ Maximum soot mass	▪ GO to Pinpoint Test **A.**
P2A00-16	O2 Circuit Range / Performance (Bank 1, Sensor 1) - Circuit voltage below threshold	**NOTE:** - Circuit LPTR_A - ▪ The engine control module measured a voltage below a specified range but not necessarily a short circuit to ground ▪ Harness failure - Heated oxygen sensor failure ▪ Heated oxygen sensor failure	▪ This DTC is set when the engine control module detects the voltage on the trim resistor circuit of the heated oxygen sensor is less than the voltage threshold. This may be caused by the heated oxygen sensor being too hot to operate correctly. Refer to the workshop manual and check the exhaust system and heated oxygen sensor harness for sign of mechanical damage. Refer to the electrical circuit diagrams and check all the heated oxygen sensor circuits for open circuits, short circuit to power, short circuit to ground, short circuit to other circuits. Check all engine control module power and ground supplies. Repair harness as required. Clear DTC and retest ▪ Check and install new heated oxygen sensor as required
P2A00-17	O2 Circuit Range / Performance (Bank 1, Sensor 1) - Circuit voltage above threshold	**NOTE:** - Circuit LPTR_A - ▪ The engine control module measured a voltage above a specified range but not necessarily a short circuit to power ▪ Harness failure - Heated oxygen sensor failure ▪ Heated oxygen sensor failure	▪ This DTC is set when the engine control module detects the voltage on the trim resistor circuit of the heated oxygen sensor is greater than the voltage threshold. This may be caused by the heated oxygen sensor being too hot to operate correctly. Refer to the workshop manual and check the exhaust system and heated oxygen sensor harness for sign of mechanical damage. Refer to the electrical circuit diagrams and check all the heated oxygen sensor circuits for open circuits, short circuit to power, short circuit to ground, short circuit to other circuits. Check all engine control module power and ground supplies. Repair harness as required. Clear DTC and retest ▪ Check and install new heated oxygen sensor as required

Pre Catalyst Oxygen Sensor Adaption Process

Pre catalyst oxygen sensor adaption cycle is NOT possible while DTCs are logged. Using the manufacturer approved diagnostic system, carry out FIT NEW PARTICULATE FILTER PROCESS only and clear the DTCs. After completing FIT NEW PARTICULATE FILTER PROCESS continue with pre catalyst oxygen sensor adaption cycle as follows:-1. Idle vehicle for 10 minutes 2. Set car in command shift 3rd gear 3. Accelerate to 3800RPM (where achievable) and overrun / coast down without braking until revs drop below 1500 RPM 4. Repeat step 3 a further 3 times 5. Check for any DTCs. If adaption has failed a DTC will be evident and the sensor will require replacement 6. Check oxygen sensor adaption is now complete by returning to pinpoint test A6 item 2 7. Using the manufacturer approved diagnostic system clear the DTC and re-test. Return vehicle to the customer

Differential Pressure Sensor Adaption Process

If a new diesel particulate filter pressure sensor or hose lines have been installed or incorrectly routed, or any pressure sensor circuit repairs carried out, the engine control module must learn and store the new diesel particulate filter pressure sensor offset value. The following conditions must be met to allow the diesel particulate filter pressure sensor offset value to be learnt and stored: Using the manufacturer approved diagnostic system, clear DTCs from engine control module, then monitor the datalogger signal 'sump oil temperature - measured' ensuring a minimum of 50 degrees C is achieved. Start engine, run above 500rpm for 2 minutes, then a further 30 seconds at idle. Ensure the engine cooling fan is not running. Set vehicle in park and set ignition status to off. Wait 30 seconds for the engine control module to power down, learn and store diesel particulate filter pressure sensor offset value. This process must be carried out six times, to allow a large negative offset value to adapt back to 0 Hpa

PINPOINT TESTS

PINPOINT TEST A : RED WARNING MESSAGE DPF FULL VISIT DEALER IS DISPLAYED AND DTC P2463-00 IS LOGGED	
TEST CONDITIONS	DETAILS/RESULTS/ACTIONS
A1: VIN INFORMATION	
	1 Record the full vehicle identification number for the vehicle under test, as this information may later be required by dealer technical support
	Has the vehicle identification number been recorded? **Yes** Proceed to the next step **No** Record the vehicle identification number and proceed to the next step
A2: VEHICLE MILEAGE	
	1 Record the full mileage for the vehicle under test, as this information may later be required by dealer technical support

	Has the mileage been recorded? **Yes** Proceed to the next step **No** Record the mileage and proceed to the next step
A3: RECORD ALL ENGINE CONTROL MODULE DTCS	
	1 Using the manufacturer approved diagnostic system, check engine control module, for DTCs
	Are any other DTCs logged? **Yes** Using the manufacturer approved diagnostic system refer to the relevant DTC index and repair all DTCs as requiredProceed to the next step **No** Proceed to step 7
A4: AMBER/RED DPF FULL MESSAGE	
	1 Verify with the customer the approximate time and mileage between the AMBER DPF FULL message being displayed and the RED DPF FULL message being displayed
	Was a mileage up to 625 miles (1000KM) driven between the AMBER DPF FULL message being displayed and the RED DPF FULL message being displayed? **Yes** Suspect the customer has ignored the AMBER DPF FULL REFER TO HANDBOOK message. The customer should be advised of this and the repair may become chargeable Proceed to step 7 **No** Proceed to the next step
A5: OTHER RELATED ENGINE CONTROL MODULE DTCS	
	1 Related engine control module DTCs other than P2463-00 are logged
	Are related engine control module DTCs other than P2463-00 logged? **Yes** Refer to the relevant DTC index. Repair as required. Using the manufacturer approved diagnostic system clear the DTCs and re-test **No** Proceed to step 7
A6: DIESEL PARTICULATE FILTER REGENERATION CYCLE	
	NOTE: Using the manufacturer approved diagnostic system begin to perform a service regeneration cycle, **DO NOT** drive the cleaning cycle. **Record the grams of soot only** 1 With the engine at running temperature check the pre catalyst oxygen sensor operation as follows:-
	2 Using the manufacturer approved diagnostic system check datalogger signals - Oxygen Sensor Voltage - (0xF424) ▪ Idle vehicle and record, should be 0.9 ~ 1 volt ▪ Idle to 100% pedal, during acceleration record, should be 0 ~ 0.3 volts ▪ Accelerate to 4500RPM (stationary) and close throttle, should read 1.1 ~ 1.3 volts

	Does the pre catalyst oxygen sensor meet this criteria? **Yes** Pre catalyst oxygen sensor is operating correctlyNote: **DO NOT** carry out the adaption process on the pre catalyst oxygen sensor, as this resets the adaption to 0Proceed to step 8 **No** Pre catalyst oxygen sensor adaption cycle is required Pre catalyst oxygen sensor adaption cycle is **NOT** possible while DTCs are loggedUsing the manufacturer approved diagnostic system, carry out FIT NEW PARTICULATE FILTER PROCESS only and clear the DTCsAfter completing FIT NEW PARTICULATE FILTER PROCESS continue with pre catalyst oxygen sensor adaption cycle as follows: -1. Idle vehicle for 10 minutes2. Set car in command shift 3rd gear3. Accelerate to 3800RPM (where achievable) and overrun / coast down without braking until revs drop below 1500 RPM4. Repeat step 3 a further 3 times5. Check for any DTCs. If adaption has failed a DTC will be evident and the sensor will require replacement6. Check oxygen sensor adaption is now complete by returning to A6 item 27. Using the manufacturer approved diagnostic system clear the DTC and re-test. Return vehicle to the customer
A7: SOOT ESTIMATOR IS ACCURATE AND THE DIFFERENTIAL PRESSURE SENSOR READING IS WORKING CORRECTLY	
	1 Using the manufacturer approved diagnostic system check datalogger signal - Particulate Filter Differential Pressure Sensor Voltage - Bank 1 - (0x03DB) ▪ Record value with ignition ON ▪ Idle engine record value ▪ Hold engine speed at 4000RPM or maximum possible RPM and record value ▪ Note: 1volt = 100mbar, 1.5volts = 300mbar at 4000RPM
	Have the values been recorded for each of the conditions? **Yes** Proceed to step 9 **No** Record values for each of the conditions and proceed to step 9
A8: EXHAUST GAS TEMPERATURES	
	1 Using the manufacturer approved diagnostic system check datalogger signals ▪ Exhaust Gas Temperature Bank 1 Sensor 2 - (0x03F5) ▪ Exhaust Gas Temperature Bank 1 Sensor 1 - (0x03F4) ▪ Exhaust Gas Temperature Bank 1 Sensor 2 - (0x03F5) ▪ Exhaust Gas Temperature Bank 1 Sensor 3 - (0x03F6)
	2 Hold engine speed at 2000RPM for 2 minutes and record values (By doing this we are trying to establish if the system can recognize heat in the exhaust during regeneration)
	Are all of the exhaust gas temperature sensors showing reasonable values between 120°C and 400°C? **Yes** Proceed to step 10 **No** Check and install new exhaust gas temperature sensors as required. Refer to the new module/component installation note at the top of the DTC index Using the manufacturer approved diagnostic system clear the DTCs and re-test
A9: COMPARISON OF SOOT MASS IN DIESEL PARTICULATE FILTER AND PARTICULATE FILTER DIFFERENTIAL PRESSURE SENSOR VOLTAGE	

NOTE:

Using the results from steps 7 and 8 establish if the Soot Mass estimator and the differential pressure sensor are aligned, in terms of their assessment of soot in the filter. If the soot mass is less than 32.5 grams the diesel particulate filter is recoverable.

	1 Using the results from step 7 check soot mass is less than 32.5 grams
	2 Using the results from step 8 check particulate filter differential pressure sensor voltage at 4000RPM is less than 1 Volt (100mbar)
	Is diesel particulate filter soot mass value less than 32.5 grams and particulate filter differential pressure sensor voltage at 4000RPM less than 1 Volts (100mbar)? **Yes** If the diesel particulate filter soot mass value is greater than 31.5 grams and the differential pressure sensor voltage is between 0.5Volts and 0.9 Volt then the diesel particulate filter is low on soot but has not been driven to allow pressure correction of the diesel particulate filter, if other issue from the tests performed are evident. Proceed to next step **No** If the diesel particulate filter soot mass value is greater than 32.5 grams and the differential pressure sensor voltage greater than 1 Volt then the diesel particulate filter has a high soot contentIf no other issue from the tests performed are evident then the vehicle has a soot generated fault not detected by DTCs.Using the manufacturer approved smoke tester carry out a boost system leakage checkRemove the diesel particulate filter from the secondary turbo charger, lower the exhaust system and inspect for oil contaminationContact dealer technical support with all of the recorded values from the above tests
A10: SOOT MASS REDUCTION	
	1 With the vehicle fully up to temperature and in Park maintain 2500RPM for 3 minutes
	2 Return to step 7, check diesel particulate filter soot mass value
	Has the diesel particulate filter soot mass reduced from the original reading? **Yes** Proceed to next step **No** Proceed to step 12
A11: DRIVE VEHICLE	
	CAUTION: At all times during this procedure you should observe all relevant speed limits, laws, and regulations 1 Drive the vehicle until the engine reaches normal operating temperature. The engine should **NOT** be left idling to achieve working temperature. Drive the vehicle for a further twenty minutes, keeping the vehicle at a constant speed between 75 km/h (45 mph) and 120 km/h (75 mph). Keeping a constant speed enables the diesel particulate filter to regenerate more efficiently. It is therefore recommended that cruise control is used to achieve this, if possible (Do NOT carry out diesel particulate filter service regeneration)
	Is the diesel particulate filter soot mass less than 6 grams? **Yes**

	Using the manufacturer approved diagnostic system clear the DTC and re-test. Return vehicle to the customer **No** Contact dealer technical support with all of the recorded values from the above tests
A12: CARRY OUT FIT NEW PARTICULATE FILTER PROCESS	
	WARNING: **DO NOT** carry out this process on any other occasion without first installing a new diesel particulate filter **1** Using the manufacturer approved diagnostic system, select SPECIAL APPLICATIONS ~ POWERTRAIN ~ carry out FIT NEW PARTICULATE FILTER PROCESS
	2 Carry out diesel particulate filter service regeneration. Record grams of soot following diesel particulate filter service regeneration
	Is the diesel particulate filter soot mass less than 6 grams? **Yes** Using the manufacturer approved diagnostic system clear the DTC and re-test. Return vehicle to the customer **No** Contact dealer technical support with all of the recorded values from the above tests

DIESEL PARTICULATE FILTER SOOT LEVEL INFORMATION

SOOT LEVEL SYMPTOM	VALUES
Soot level accumulation in diesel particulate filter is stopped	32.5g
Maximum soot level accumulation before regeneration process is inhibited	28.5g
RED warning lamp ON	31.5g
RED warning lamp OFF	24.5g
AMBER warning lamp ON	24.5g
AMBER warning lamp OFF	22.5g

DIESEL PARTICULATE FILTER REGENERATION PROCEDURE

If DPF FULL SEE HANDBOOK appears in the message center, carry out the following procedure

CAUTIONS:

- The regeneration procedure produces high temperatures in the diesel particulate filter. Heat can be felt radiating from beneath the vehicle, which is

normal and not a cause for concern. However, the vehicle should not be parked over combustible material, particularly during dry weather. The heat generated could be sufficient to start a fire when in close proximity to combustible material such as long dry grass, paper etc

- At all times during this procedure you should observe all relevant speed limits, laws, and regulations

NOTES:

- The ideal speed and conditions for regeneration are 100 km/h (62 mph) ~ 120 km/h (75 mph), in Drive. Keeping a constant speed enables the diesel particulate filter to regenerate more efficiently. It is therefore recommended that cruise control is used to achieve this, if possible
- When driving off-road during the regeneration process, greater accelerator pedal use may be required

1. Drive the vehicle until the engine reaches normal operating temperature. The engine should **NOT** be left idling to achieve working temperature

1. Drive the vehicle for a further twenty minutes, keeping the vehicle at a constant speed between 75 km/h (45 mph) and 120 km/h (75 mph)

1. If regeneration is successful the warning message will be extinguished, once the message is extinguished please keep driving for 10 minutes to ensure that the diesel particulate filter is completely clean

1. If the message remains repeat the process

DIAGNOSTIC PROCEDURES TO BE USED IF DTC P244A-00, P244A-95 OR P244A-96 IS LOGGED IN THE ENGINE CONTROL MODULE

PINPOINT TEST B : P244A-00, P244A-95 OR P244A-96	
TEST CONDITIONS	DETAILS/RESULTS/ACTIONS
B1: PRE-CHECK (ENGINE CONTROL MODULE SOFTWARE)	
	1 Check the latest relevant level of software is installed to the engine control module
	Is the latest relevant level of software installed to the engine control module? **Yes** Proceed to the next step **No** 1. Using the manufacturer approved diagnostic system, re-configure the engine control module with the latest level software2. Proceed to the next step
B2: PRE-CHECK (LOGGED DTCS)	

	1 Check that there are not other engine control module DTCs logged
	Are other engine control module DTCs logged? Yes 1. Refer to the relevant DTC index and rectify as required2. Clear the DTC and retest. When using the manufacturer approved diagnostic system clear all stored DTCs from the diagnosis menu tab3. Proceed to the next step No Proceed to the next step
B3: PRE CHECK (DIFFERENTIAL PRESSURE SENSOR ADAPTION)	
	1 Check the differential pressure sensor offset value. The following conditions must be achieved to allow the differential pressure sensor offset value to be learnt - stored: Using the manufacturer approved diagnostic system, monitor the datalogger signal 'sump oil temperature measured' ensuring a minimum of 50 degrees C is achieved. Start engine, run above 500rpm for 2 minutes, then a further 30 seconds at idle. Ensure the engine cooling fan is not running. Set vehicle in park - set ignition status to off. Wait 30 seconds for the engine control module to power down, learn - store differential pressure sensor offset value. This process must be carried out six times, to allow a large negative offset value to adapt back to 0 hPa
	Has the differential pressure sensor adaption offset value check been carried out? Yes Proceed to the next step No 1. Carry out the differential pressure sensor adaption offset value check2. Proceed to the next step
B4: DIFFERENTIAL PRESSURE SENSOR, HOSE CHECKS	
	1 Check the differential pressure sensor hoses for splits, crushing, connectivity, blockages or contamination
	Were the differential pressure sensor hoses split, crushed, blocked or contaminated? Yes 1. Rectify as required2. Clear the DTC and retest. When using the manufacturer approved diagnostic system clear all stored DTCs from the diagnosis menu tab No Proceed to the next step
B5: DIFFERENTIAL PRESSURE SENSOR, CONNECTOR CHECKS	
	1 Check the differential pressure sensor connector for disconnected, connector pin is backed out, connector pin corrosion
	Was the differential pressure sensor connector disconnected, connector pins backed out, connector pin corroded Yes 1. Rectify as required 2. Clear the DTC and retest. When using the manufacturer approved diagnostic system clear all stored DTCs from the diagnosis menu tab No Proceed to the next step
B6: DIFFERENTIAL PRESSURE SENSOR VOLTAGE MEASUREMENT	
	NOTE: The following checks are designed to verify the differential pressure sensor, pressure/voltage transfer function and will determine if the differential pressure sensor operates within tolerance. The checks will also check for leakage within the differential pressure sensor assembly and pipework. The measured voltages of the differential pressure sensor will be the result of

	pressure being applied to the reference input and high pressure input on the differential pressure sensor. 1 Connect a vehicle battery stabilizer
	2 Set the vehicle to park
	3 Set ignition to 'ON' engine 'OFF'
	4 Allow voltage to stabilize
	5 Disconnect both the rubber hoses from the metal pipes of the diesel particulate filter (the rubber hoses remain connected to the differential pressure sensor).
	6 Using the manufacturer approved diagnostic system check datalogger signal – **Particulate Filter Differential Pressure Sensor Voltage - Bank 1 (0X03DB) -**
	Does the voltage measure between 0.49 volts & 0.51 volts **Yes** Proceed to the next step **No** Check and install a new differential pressure sensor as required
B7: DIFFERENTIAL PRESSURE SENSOR VOLTAGE MEASUREMENT (VACUUM APPLIED ZERO)	
	1 Install the manufacturer approved hand vacuum pump to the reference pipe and differential pressure sensor. Ensure the gauge is reading zero value for vacuum and pressure
	2 Using the manufacturer approved diagnostic system check datalogger signal – **Particulate Filter Differential Pressure Sensor Voltage - Bank 1 (0X03DB) -**
	Does the voltage measure between 0.485 volts & 0.515 volts **Yes** Proceed to the next step **No** Check and install a new differential pressure sensor as required
B8: DIFFERENTIAL PRESSURE SENSOR VOLTAGE MEASUREMENT (VACUUM APPLIED 5 INHG)	
	1 Using the manufacturer approved hand vacuum pump apply a vacuum of 5 inHg to the reference pipe and differential pressure sensor
	2 Using the manufacturer approved diagnostic system check datalogger signal – **Particulate Filter Differential Pressure Sensor Voltage - Bank 1 (0X03DB) -**
	Does the voltage measure between 1.35 volts & 1.47 volts **Yes** Proceed to the next step **No** Check and install a new differential pressure sensor as requiredCarry out the differential pressure sensor adaption offset value learn as described in test step B3
B9: DIFFERENTIAL PRESSURE SENSOR VOLTAGE MEASUREMENT (VACUUM APPLIED 10 INHG)	
	1 Using the manufacturer approved hand vacuum pump apply a vacuum of 10 inHg to the reference pipe and differential pressure sensor
	2 Using the manufacturer approved diagnostic system check datalogger signal – **Particulate Filter Differential Pressure Sensor Voltage - Bank 1 (0X03DB) -**
	Does the voltage measure between 2.30 volts & 2.45 volts **Yes** Proceed to the next step **No**

	Check and install a new differential pressure sensor as requiredCarry out the differential pressure sensor adaption offset value learn as described in test step B3
B10: DIFFERENTIAL PRESSURE SENSOR VOLTAGE MEASUREMENT (VACUUM APPLIED 15 INHG)	
	1 Using the manufacturer approved hand vacuum pump apply a vacuum of 15 inHg to the reference pipe and differential pressure sensor
	2 Using the manufacturer approved diagnostic system check datalogger signal – **Particulate Filter Differential Pressure Sensor Voltage - Bank 1 (0X03DB) -**
	Does the voltage measure between 3.30 volts & 3.45 volts **Yes** Proceed to the next step **No** Check and install a new differential pressure sensor as requiredCarry out the differential pressure sensor adaption offset value learn as described in test step B3
B11: DIFFERENTIAL PRESSURE SENSOR VOLTAGE MEASUREMENT (VACUUM APPLIED 20 INHG)	
	1 Using the manufacturer approved hand vacuum pump apply a vacuum of 20 inHg to the reference pipe and differential pressure sensor
	2 Using the manufacturer approved diagnostic system check datalogger signal – **Particulate Filter Differential Pressure Sensor Voltage - Bank 1 (0X03DB) -**
	Does the voltage measure between 4.25 volts & 4.40 volts **Yes** Proceed to the next step **No** Check and install a new differential pressure sensor as requiredCarry out the differential pressure sensor adaption offset value learn as described in test step B3
B12: DIFFERENTIAL PRESSURE SENSOR VOLTAGE MEASUREMENT (VACUUM APPLIED 25 INHG)	
	1 Using the manufacturer approved hand vacuum pump apply a vacuum of 25 inHg to the reference pipe and differential pressure sensor
	2 Using the manufacturer approved diagnostic system check datalogger signal – **Particulate Filter Differential Pressure Sensor Voltage - Bank 1 (0X03DB) -**
	Does the voltage measure between 4.75 volts & 4.90 volts **Yes** Release the vacuum and remove the hand vacuum pump from the reference pipe and differential pressure sensorProceed to the next step **No** Check and install a new differential pressure sensor as requiredCarry out the differential pressure sensor adaption offset value learn as described in test step B3
B13: DIFFERENTIAL PRESSURE SENSOR VOLTAGE MEASUREMENT (PRESSURE APPLIED ZERO)	
	1 Install the manufacturer approved hand vacuum pump to the high pressure pipe and differential pressure sensor. Ensure the gauge is reading zero value for vacuum and pressure
	2 Using the manufacturer approved diagnostic system check datalogger signal – **Particulate Filter Differential Pressure Sensor Voltage - Bank 1 (0X03DB) -**
	Does the voltage measure between 0.490 volts & 0.515 volts **Yes** Proceed to the next step **No** Check and install a new differential pressure sensor as required
B14: DIFFERENTIAL PRESSURE SENSOR VOLTAGE MEASUREMENT (PRESSURE APPLIED 20KPA)	
	1 Using the manufacturer approved hand vacuum pump apply a pressure of 20 KPa

	to the high pressure pipe and differential pressure sensor
	2 Using the manufacturer approved diagnostic system check datalogger signal – **Particulate Filter Differential Pressure Sensor Voltage - Bank 1 (0X03DB) -**
	Does the voltage measure between 1.60 volts & 1.75 volts **Yes** Proceed to the next step **No** Check and install a new differential pressure sensor as required
B15: DIFFERENTIAL PRESSURE SENSOR VOLTAGE MEASUREMENT (PRESSURE APPLIED 40KPA)	
	1 Using the manufacturer approved hand vacuum pump apply a pressure of 40 KPa to the high pressure pipe and differential pressure sensor
	2 Using the manufacturer approved diagnostic system check datalogger signal – **Particulate Filter Differential Pressure Sensor Voltage - Bank 1 (0X03DB) -**
	Does the voltage measure between 2.70 volts & 2.85 volts **Yes** Proceed to the next step **No** Check and install a new differential pressure sensor as required
B16: DIFFERENTIAL PRESSURE SENSOR VOLTAGE MEASUREMENT (PRESSURE APPLIED 60KPA)	
	1 Using the manufacturer approved hand vacuum pump apply a pressure of 60 KPa to the high pressure pipe and differential pressure sensor
	2 Using the manufacturer approved diagnostic system check datalogger signal – **Particulate Filter Differential Pressure Sensor Voltage - Bank 1 (0X03DB) -**
	Does the voltage measure between 3.80 volts & 3.90 volts **Yes** Proceed to the next step **No** Check and install a new differential pressure sensor as required
B17: DIFFERENTIAL PRESSURE SENSOR VOLTAGE MEASUREMENT (PRESSURE APPLIED 80KPA)	
	1 Using the manufacturer approved hand vacuum pump apply a pressure of 80 KPa to the high pressure pipe and differential pressure sensor
	2 Using the manufacturer approved diagnostic system check datalogger signal – **Particulate Filter Differential Pressure Sensor Voltage - Bank 1 (0X03DB) -**
	Does the voltage measure between 4.0 volts & 4.89 volts **Yes** The differential pressure sensor is OK and should not be replaced Carry out the differential pressure sensor adaption offset value learn as described in test step B3 **No** Check and install a new differential pressure sensor as required Carry out the differential pressure sensor adaption offset value learn as described in test step B3

DTC INDEX

For a list of DTCs that could be logged on this vehicle, please refer to Section 100-00. REFER to: Diagnostic Trouble Code (DTC) Index - TDV8 4.4L Diesel, DTC: Engine Control Module (ECM) (100-00 General Information, Description and Operation).

PUBLISHED: 11-JAN-2017
2015.0 RANGE ROVER (LG), 309-00

EXHAUST SYSTEM - TDV8 4.4L DIESEL

DIAGNOSIS AND TESTING

PRINCIPLES OF OPERATION

For a detailed description of the Exhaust System, refer to the relevant Description and Operation section in the workshop manual. REFER to: Exhaust System (309-00D Exhaust System - TDV8 4.4L Diesel, Description and Operation).

INSPECTION AND VERIFICATION

CAUTION:

Diagnosis by substitution from a donor vehicle is **NOT** acceptable. Substitution of control modules does not guarantee confirmation of a fault, and may also cause additional faults in the vehicle being tested and/or the donor vehicle.

NOTES:

- If a control module or a component is suspect and the vehicle remains under manufacturer warranty, refer to the Warranty Policy and Procedures manual, or determine if any prior approval programme is in operation, prior to the installation of a new module/component.
- When performing voltage or resistance tests, always use a digital multimeter accurate to three decimal places, and with an up-to-date calibration certificate. When testing resistance always take the resistance of the digital multimeter leads into account.
- Check and rectify basic faults before beginning diagnostic routines involving pinpoint tests.

1. Verify the customer concern

1. Visually inspect for obvious signs of damage and system integrity

Visual Inspection

MECHANICAL
▪ Exhaust system

- Catalytic converter
- Silencers
- Exhaust leaks
- Hanger brackets
- Mounting rubbers
- Heatshields

1. If an obvious cause for an observed or reported concern is found, correct the cause (if possible) before proceeding to the next step

1. If the cause is not visually evident, verify the symptom and refer to the Symptom Chart, alternatively check for Diagnostic Trouble Codes (DTCs) and refer to the DTC Index

1. Check DDW for open campaigns. Refer to the corresponding bulletins and SSMs which may be valid for the specific customer complaint and carry out the recommendations as required

SYMPTOM CHART

SYMPTOM	POSSIBLE CAUSES	ACTION
Exhaust leaking	▪ Exhaust system leaking	▪ Check the integrity of the exhaust system. Rectify as necessary
Exhaust excessively noisy	▪ Exhaust system leaking ▪ Exhaust system fouling the body, transmission, etc	▪ Check the integrity of the exhaust system. Rectify as necessary ▪ Check the exhaust system for foul conditions
Engine performance reduced	▪ Exhaust system restricted /blocked ▪ Catalytic converter restricted /blocked ▪ Engine system fault	▪ Check the exhaust system for restrictions and blockages. Rectify as necessary ▪ Check the catalytic converter for restrictions and blockages. Rectify as necessary ▪ Using the Jaguar Land Rover approved diagnostic equipment, check the powertrain control module for related DTCs and refer to the relevant DTC index

DTC INDEX

For a list of Diagnostic Trouble Codes (DTCs) that could be logged on this vehicle, please refer to Section 100-00. REFER to: Diagnostic Trouble Code (DTC) Index - V6 S /C 3.0L Petrol , DTC: Engine Control Module (ECM) (100-00 General Information, Description and Operation).

PUBLISHED: 08-MAY-2017
2015.0 RANGE ROVER (LG), 309-00

EXHAUST SYSTEM - TDV8 4.4L DIESEL

CATALYTIC CONVERTER (G1509414)

17.50.01	CATALYTIC CONVERTER - RENEW	4400 CC, TDV8	0.3	USED WITHINS

REMOVAL

WARNING:

Observe due care when working near a hot exhaust system.

NOTES:

- Removal steps in this procedure may contain installation details.
- Some variation in the illustrations may occur, but the essential information is always correct.

1.

WARNING:

Make sure to support the vehicle with axle stands.

Raise and support the vehicle.

2.

CAUTION:

Make sure that the exhaust system is supported with suitable retaining straps.

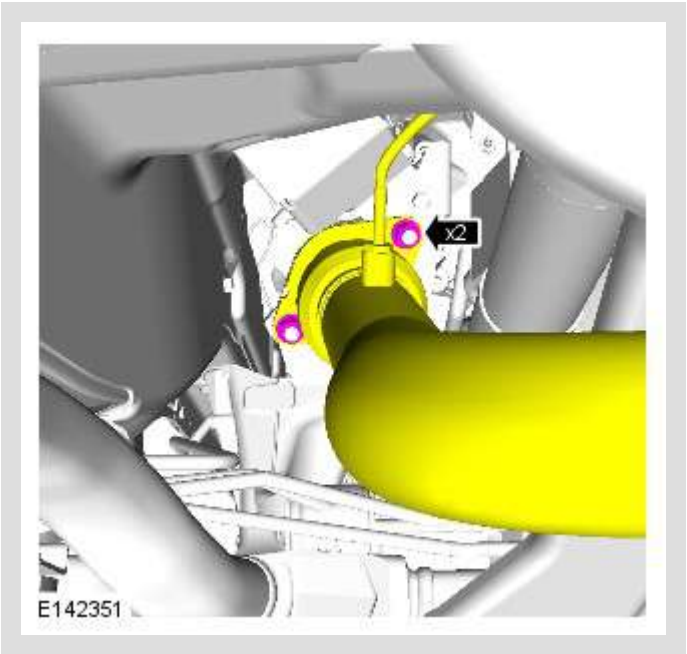

Torque: 47 Nm

3.

CAUTION:

Make sure that the exhaust system is supported with suitable retaining straps.

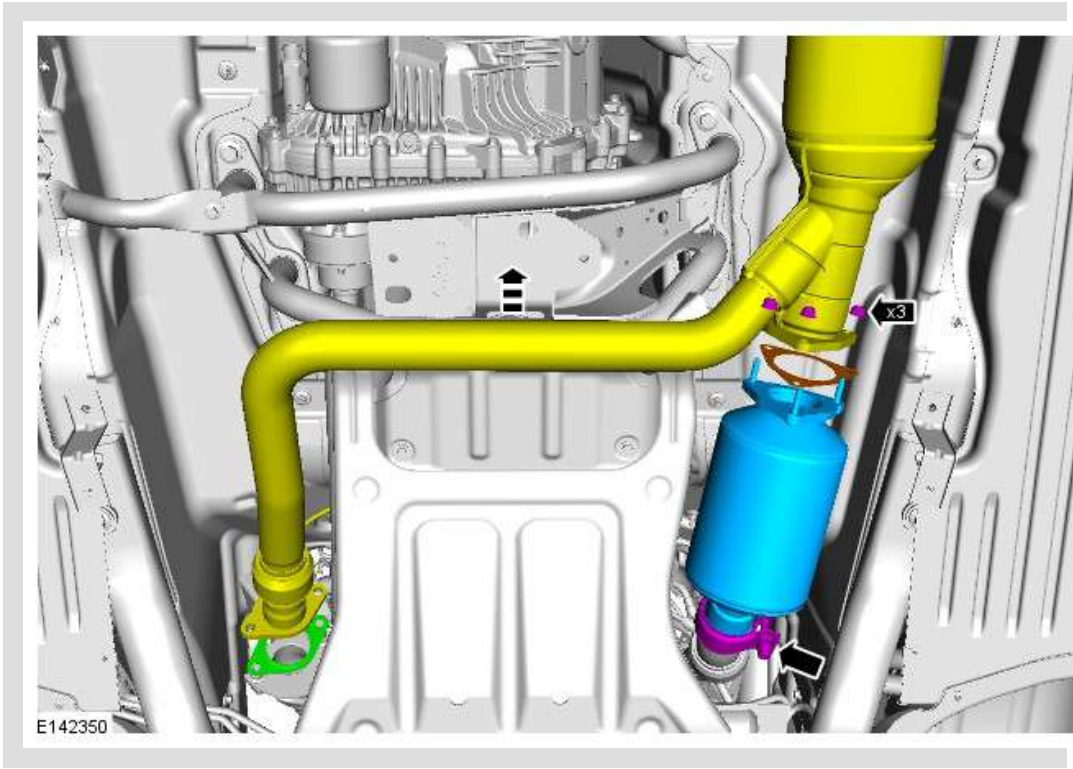

Torque:

Clamp **47 Nm**

M8 Nuts **30 Nm**

4.

CAUTION:

Eye protection must be worn. Wear protective gloves.

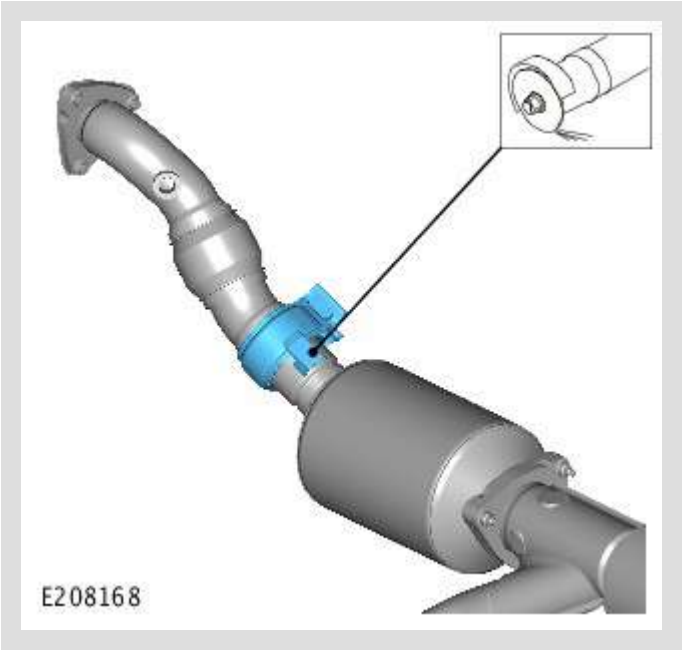

The exhaust clamp is spot welded into position and will require removal with the use of a grinder or drill.

INSTALLATION

1.

NOTE:

Install a new exhaust clamp.

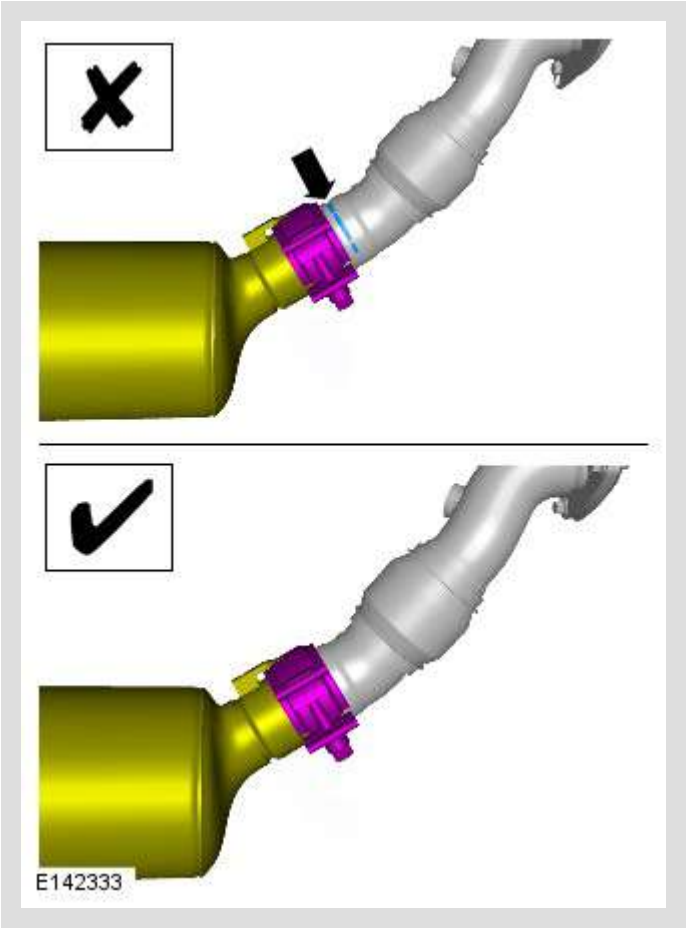

To install, reverse the removal procedure.

PUBLISHED: 18-AUG-2016
2015.0 RANGE ROVER (LG), 309-00

EXHAUST SYSTEM - TDV8 4.4L DIESEL

EXHAUST SYSTEM - VEHICLES WITHOUT: DIESEL PARTICULATE FILTER (DPF) (G1509416)

30.10.01	EXHAUST SYSTEM - RENEW	4400 CC, TDV8, WITH PARTICULATE FILTER	1	USED WITHINS

REMOVAL

WARNING:

Observe due care when working near a hot exhaust system.

NOTES:

- Removal steps in this procedure may contain installation details.
- Some variation in the illustrations may occur, but the essential information is always correct.

1.

WARNING:

Make sure to support the vehicle with axle stands.

Raise and support the vehicle.

2.

CAUTION:

Make sure that the exhaust system is supported with suitable retaining straps.

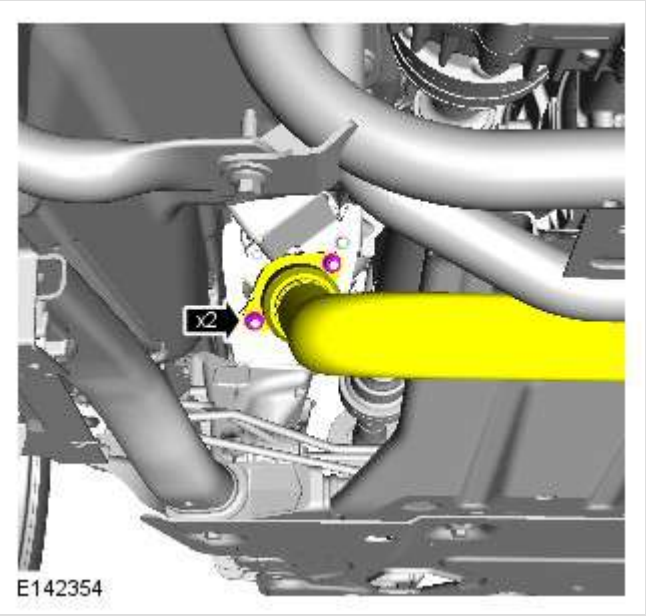

Install a new gasket.

Torque: **47 Nm**

3.

CAUTION:

Make sure that the exhaust system is supported with suitable retaining straps.

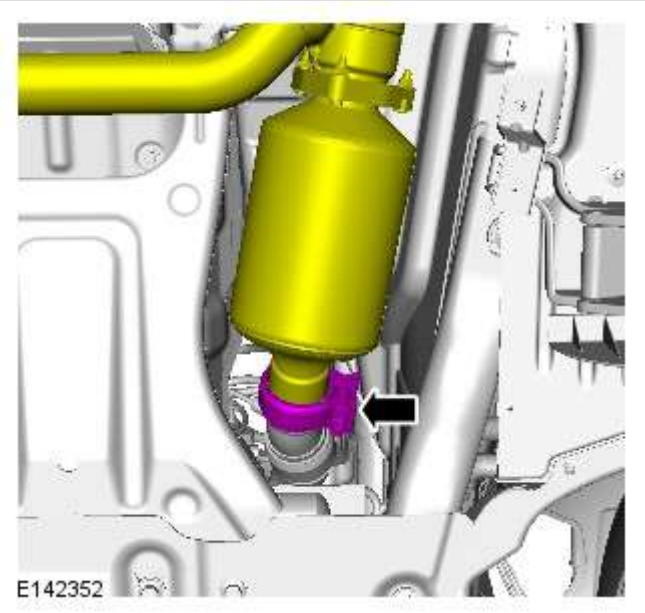

Torque: **47 Nm**

4.

CAUTION:

Make sure that the exhaust system is supported with suitable retaining straps.

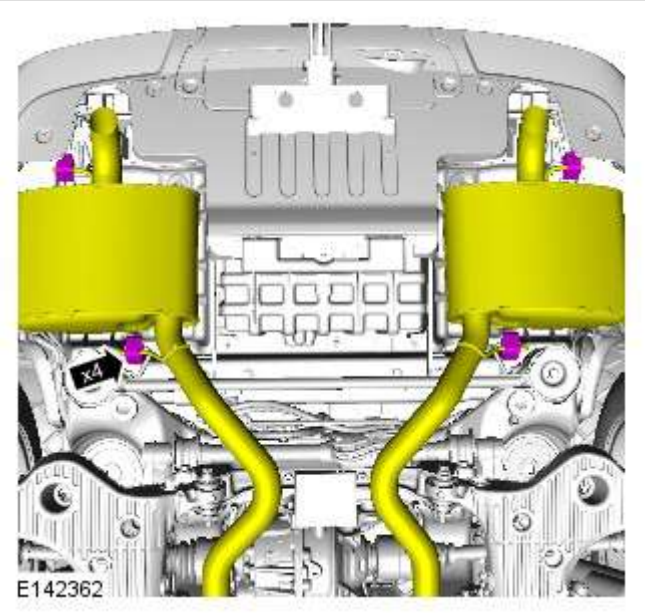

5.

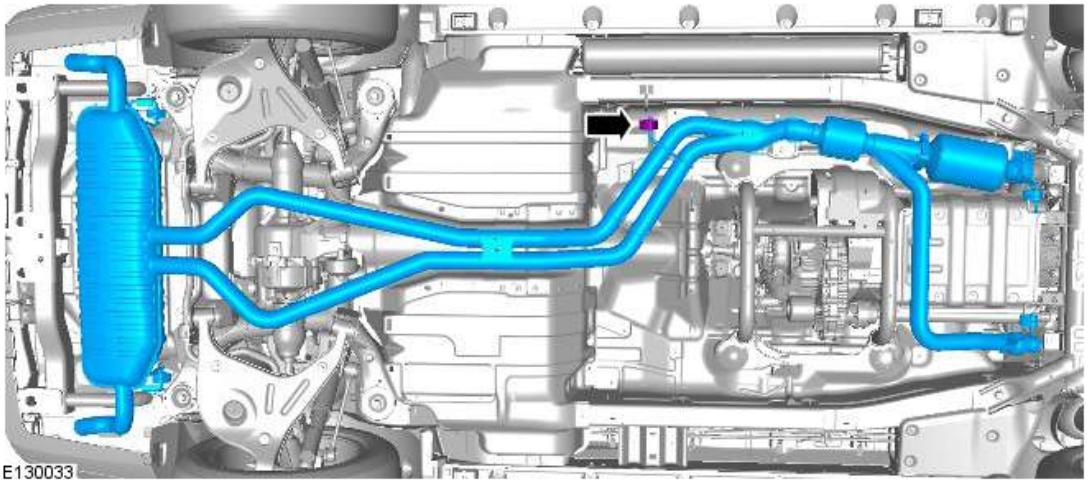

With assistance, remove the exhaust system.

6. NOTE:

Do not disassemble further if the component is removed for access only.

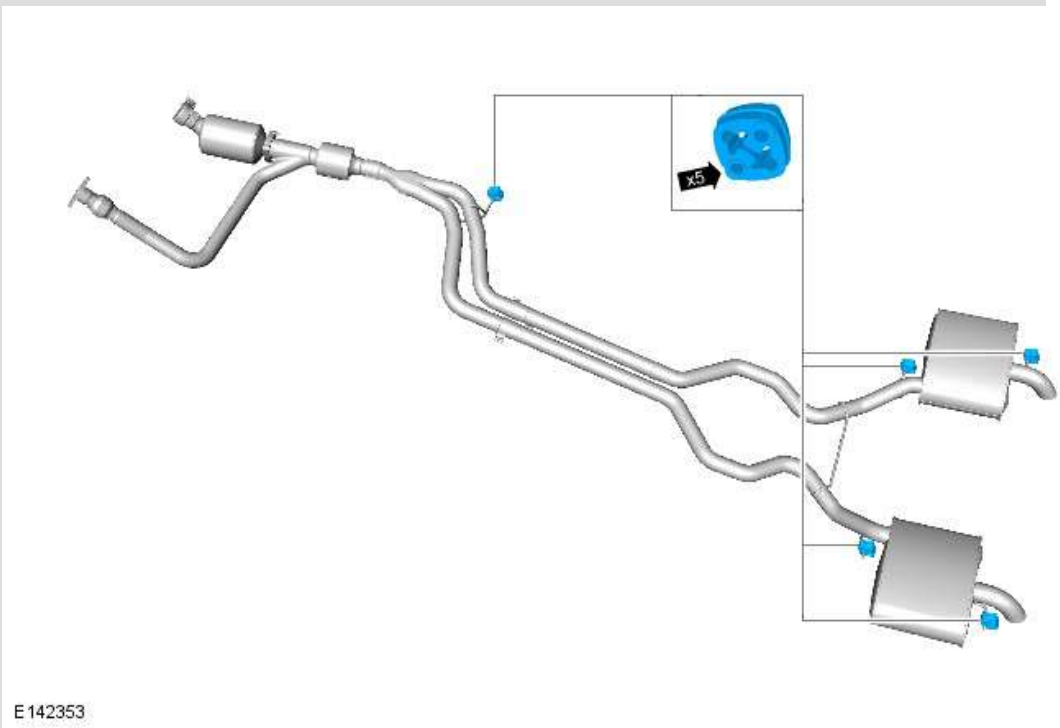

INSTALLATION

1. To install, reverse the removal procedure.

PUBLISHED: 24-AUG-2012
2015.0 RANGE ROVER (LG), 309-00

EXHAUST SYSTEM - TDV8 4.4L DIESEL

EXHAUST SYSTEM - VEHICLES WITH: DIESEL PARTICULATE FILTER (DPF)

(G1509417)

30.10.01	EXHAUST SYSTEM - RENEW	4400 CC, TDV8, WITH PARTICULATE FILTER	1	USED WITHINS

REMOVAL

WARNING:

Observe due care when working near a hot exhaust system.

NOTES:

- Removal steps in this procedure may contain installation details.
- Some variation in the illustrations may occur, but the essential information is always correct.

1.

WARNING:

Make sure to support the vehicle with axle stands.

Raise and support the vehicle.

2. Refer to: Engine Undershield (501-02 Front End Body Panels, Removal and Installation).

3.

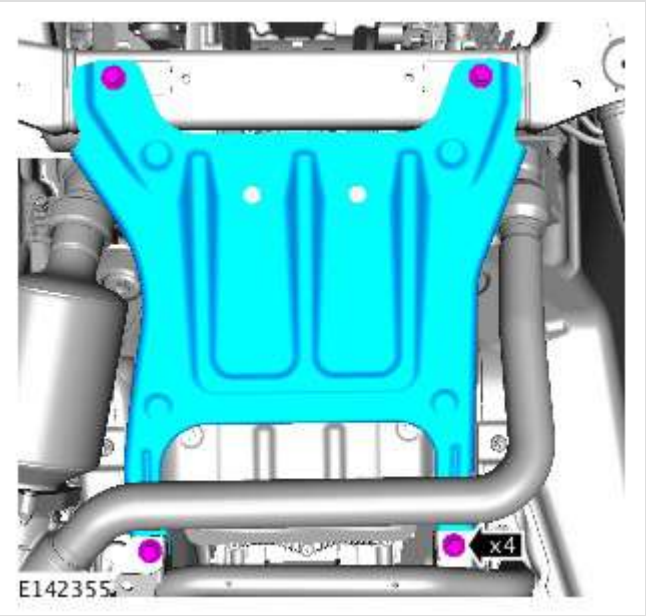

Torque: **60 Nm**

4.

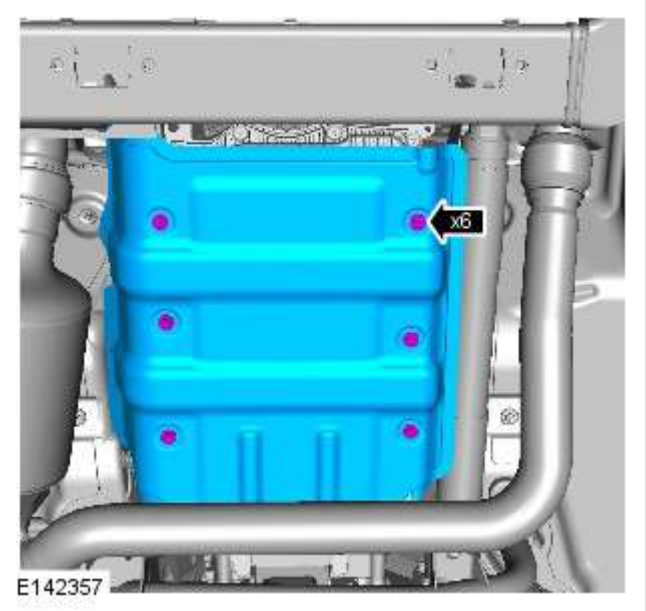

Torque: **10 Nm**

5.

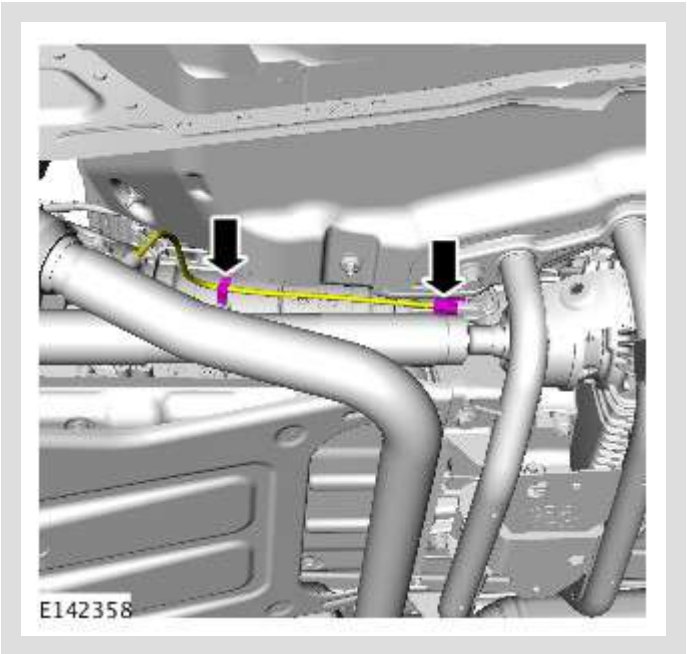

6.

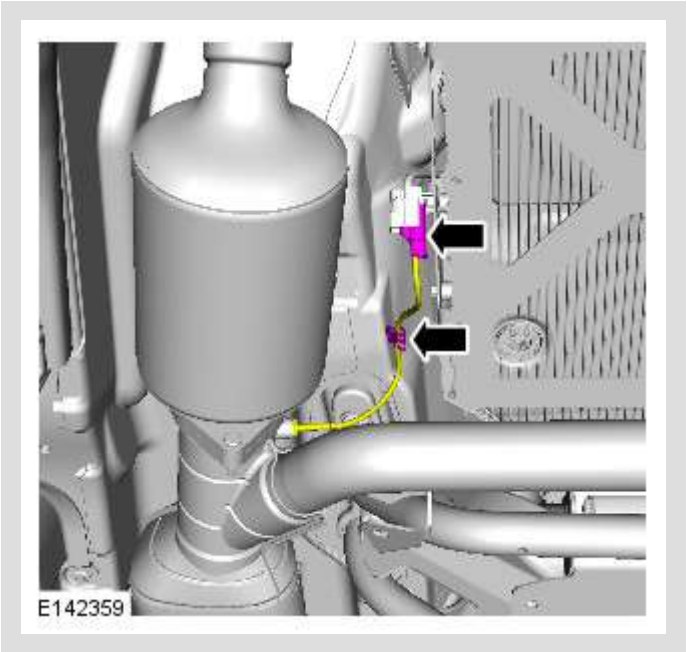

7.

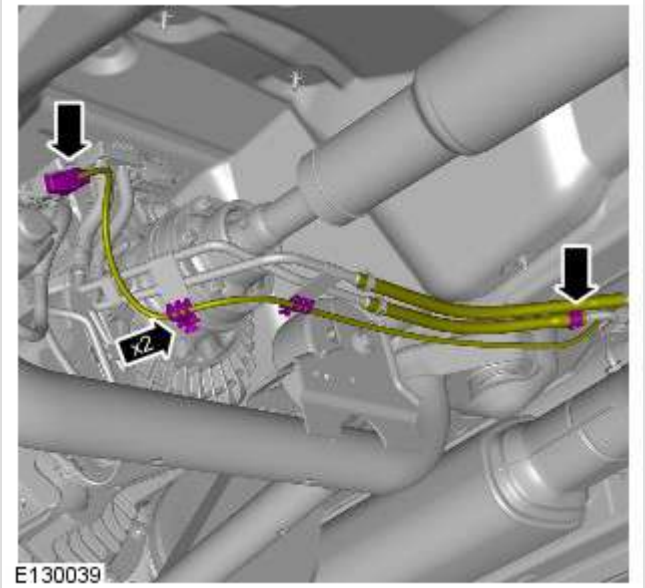

8.

CAUTION:

Make sure that the exhaust system is supported with suitable retaining straps.

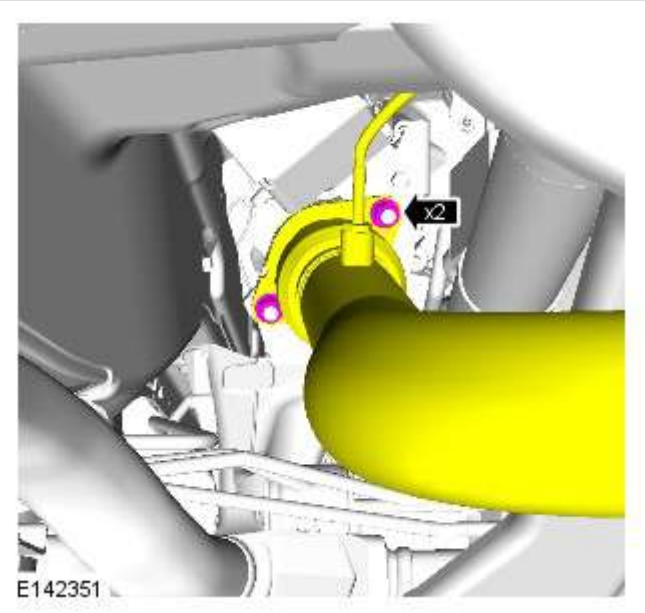

Torque: 47 Nm

9.

CAUTION:

Make sure that the exhaust system is supported with suitable retaining straps.

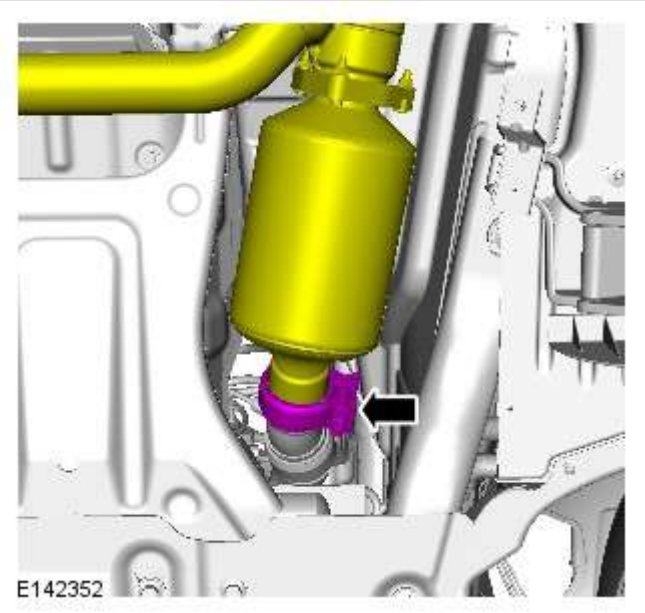

Torque: 47 Nm

10.

CAUTION:

Make sure that the exhaust system is supported with suitable retaining straps.

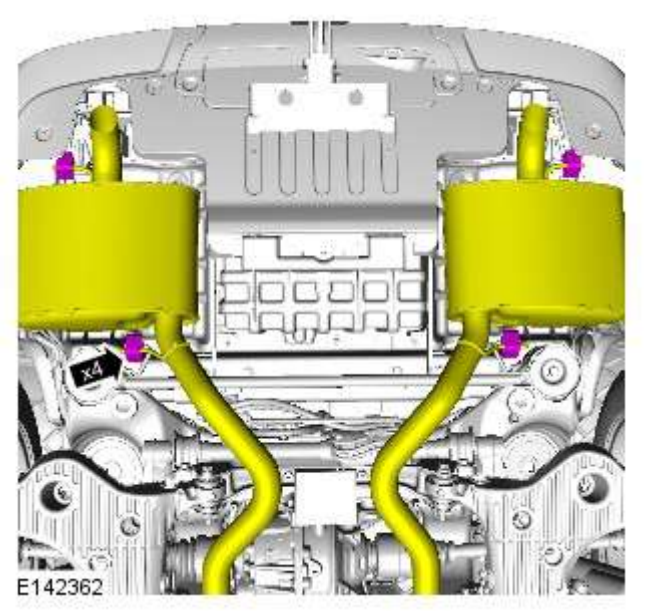

11.

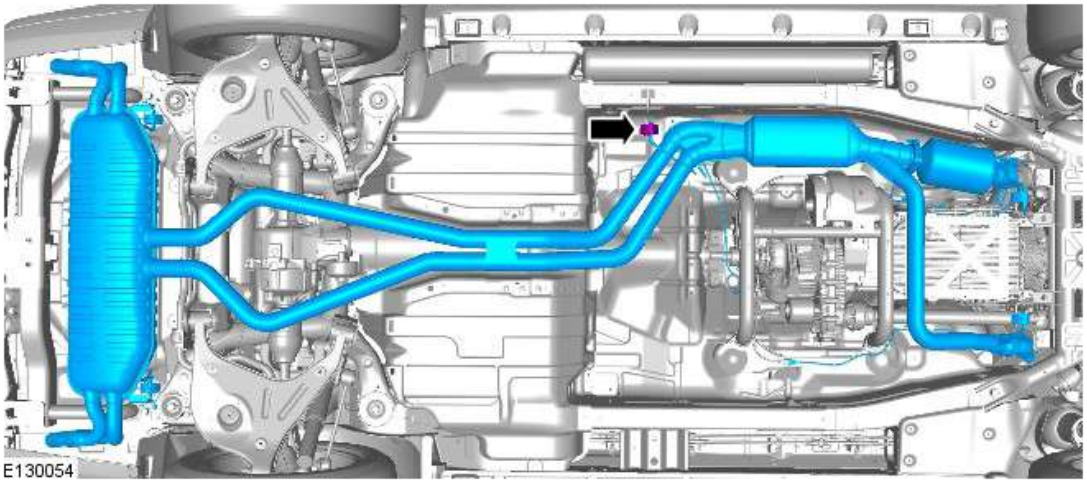

With assistance, remove the exhaust system.

12. NOTE:

Do not disassemble further if the component is removed for access only.

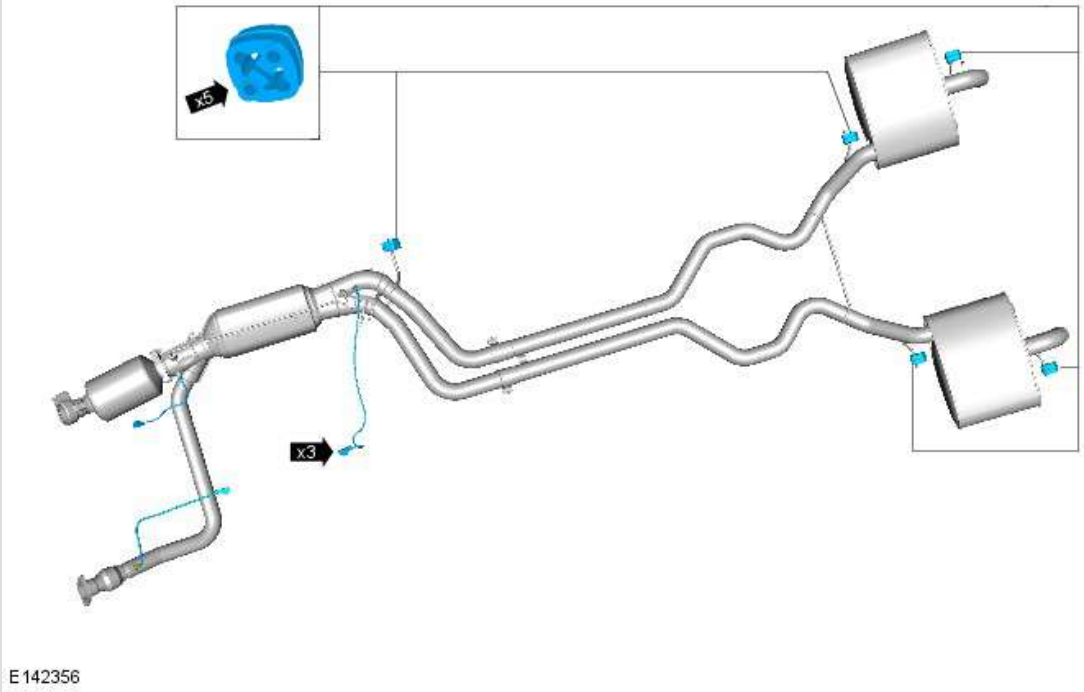

Torque: **35 Nm**

INSTALLATION

1. To install, reverse the removal procedure.

PUBLISHED: 22-MAR-2017
2015.0 RANGE ROVER (LG), 309-00

EXHAUST SYSTEM - TDV8 4.4L DIESEL

DIESEL PARTICULATE FILTER (G1509415)

17.50.20	DIESEL PARTICULATE FILTER - RENEW	4400 CC, TDV8	1.2	USED WITHINS	
17.50.20	DIESEL PARTICULATE FILTER - RENEW	4400 CC, TDV8, WITHOUT DIESEL EXHAUST FLUID	1.2	USED WITHINS	
60.90.18.02	AIR SUSPENSION - GEOMETRY SET MODE - ACTIVATE AND DEACTIVATE - WITHOUT USING DIAGNOSTIC TOOL	ALL DERIVATIVES	0.1	USED WITHINS	

SPECIAL TOOL(S)

100-051

Cutter,
Exhaust Pipe

REMOVAL

WARNING:

Observe due care when working near a hot exhaust system.

NOTES:

- Removal steps in this procedure may contain installation details.
- Some variation in the illustrations may occur, but the essential information is always correct.

1.

WARNING:

Make sure to support the vehicle with axle stands.

Raise and support the vehicle.

2.

Refer to: Engine Undershield (501-02 Front End Body Panels, Removal and Installation).

3.

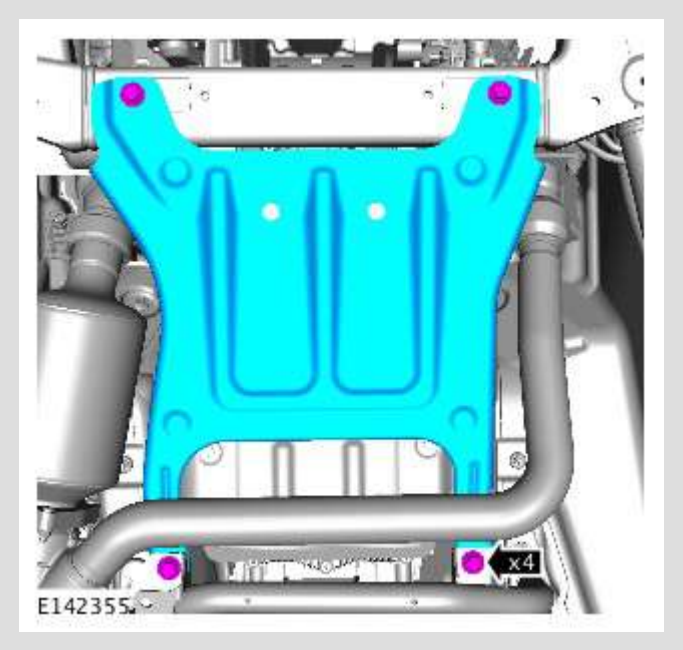

Torque: **60 Nm**

4.

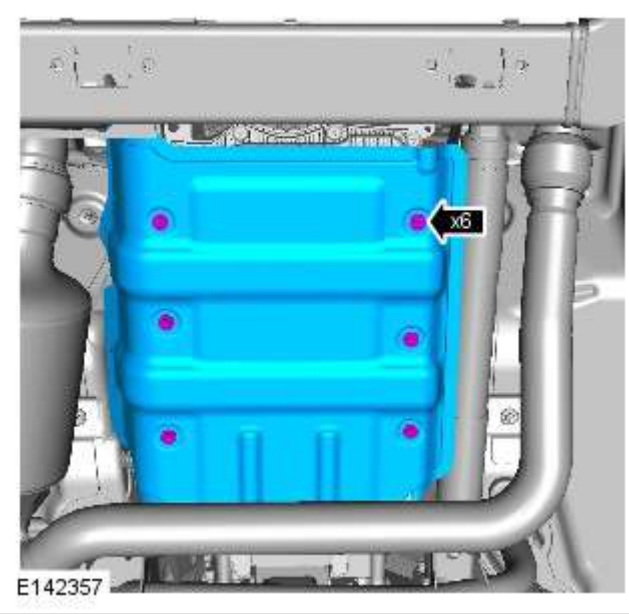

Torque: **10 Nm**

5.

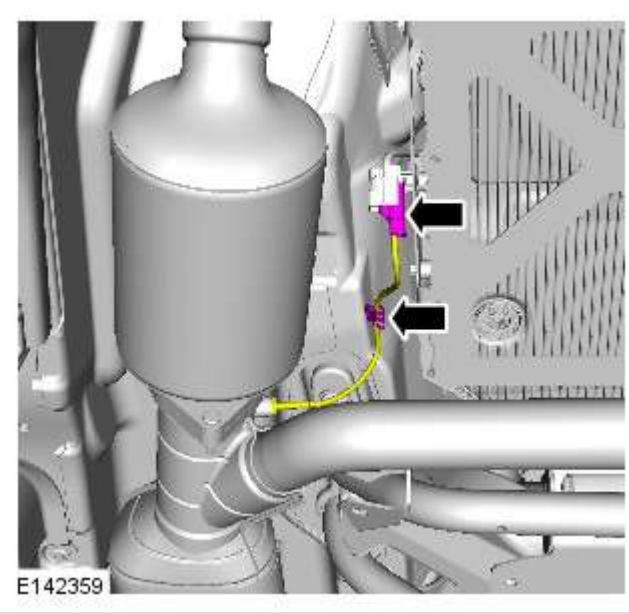

6.

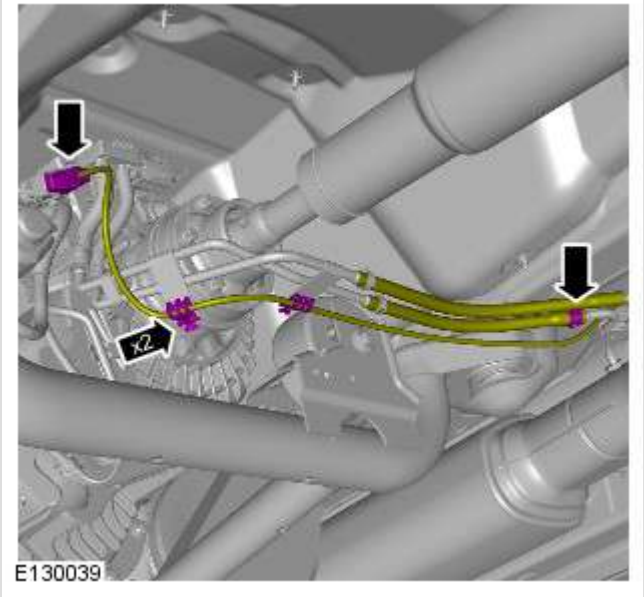

7.

CAUTION:

Make sure that the exhaust system is supported with suitable retaining straps.

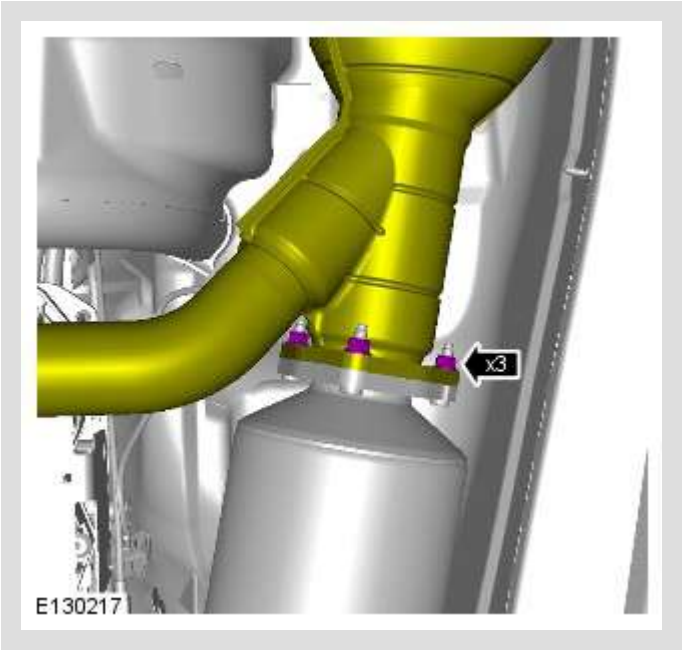

Torque: **30 Nm**

8.

CAUTION:

Make sure that the exhaust system is supported with suitable retaining straps.

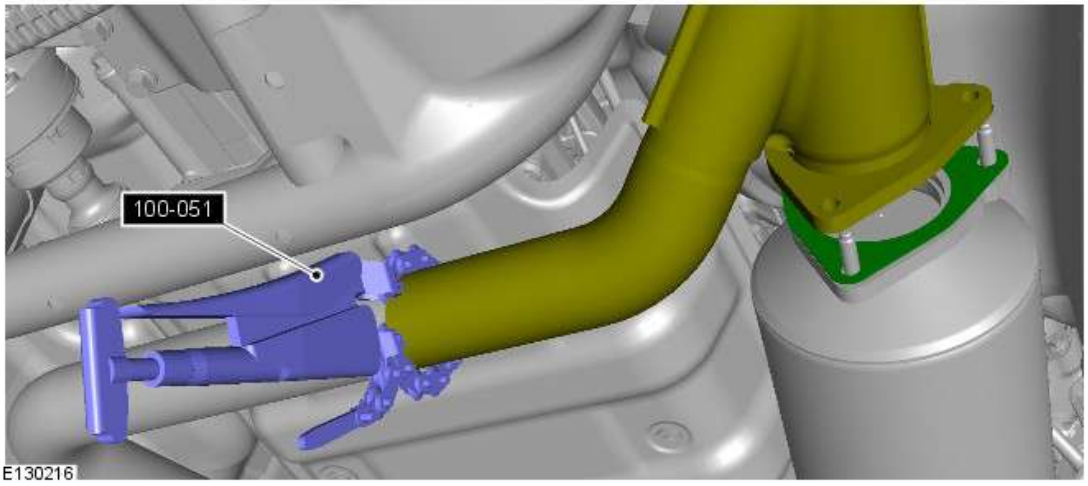

Special Tool(s): 100-051

9.

CAUTION:

Make sure to support the rear muffler assembly with a suitable stand.

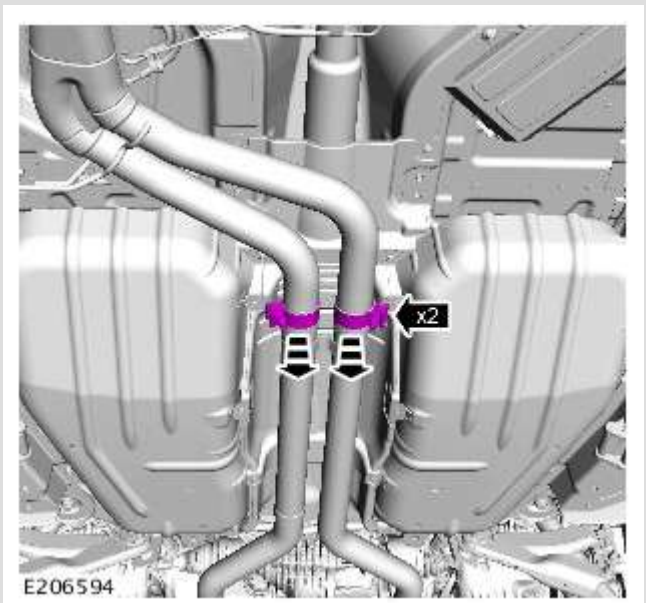

Remove the DPF from the rear muffler.

Torque: **55 Nm**

10.

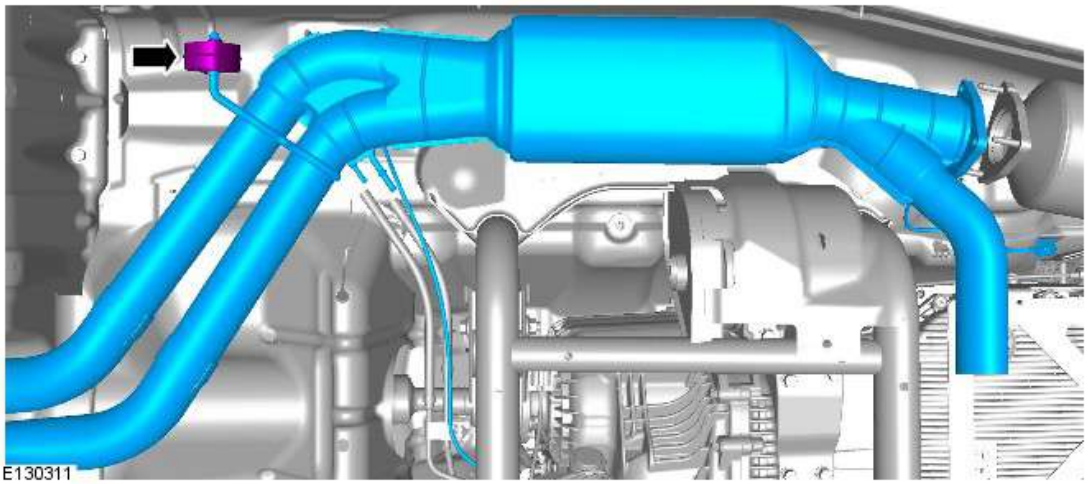

11.

NOTE:

Do not disassemble further if the component is removed for access only.

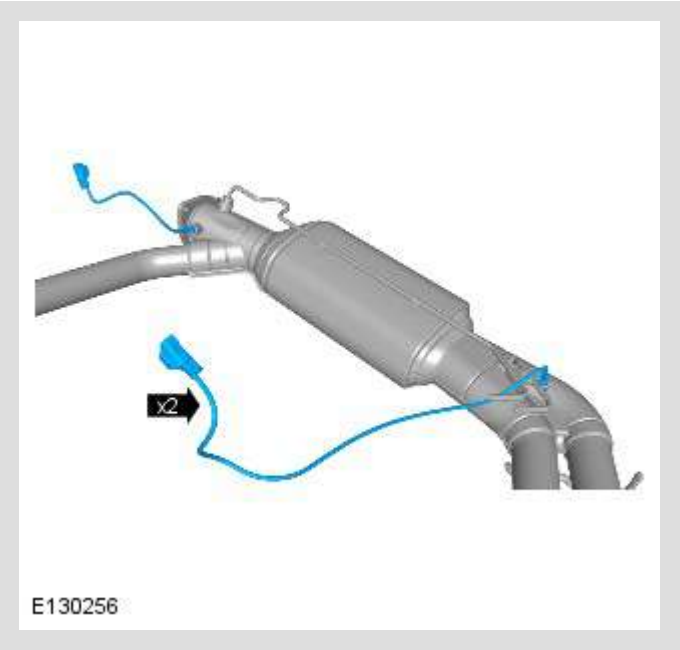

Torque: **35 Nm**

INSTALLATION

1.

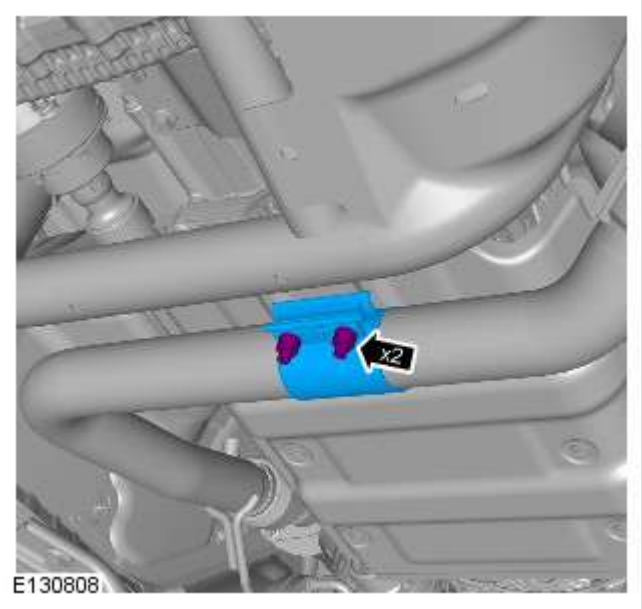

To install, reverse the removal procedure.

Torque: **55 Nm**

2. If a new unit is installed, configure using the approved diagnostic tool.