PUBLISHED: 04-DEC-2012
2015.0 RANGE ROVER (LG), 310-01

FUEL TANK AND LINES - TDV8 4.4L DIESEL

Capacities

	LITERS
Fuel tank capacity	105 (usable)

General Specifications

ITEM	SPECIFICATION
Fuel system	Mechanical - recirculating
Fuel tank	Multi layer plastic
High pressure fuel pump	Located at the front of left cylinder head, gear driven from the camshaft
Low pressure fuel pump	Dual stage electric - submersible - located in fuel tank
Auxiliary low pressure fuel pump	Located on the left front wheelhouse panel
Fuel cooler	Located on the left front suspension top mount assembly
Fuel filter	Remotely located on the left front suspension top mount assembly - fitted with a renewable element
Fuel tank sender units	Two - active and passive - passive sender unit is attached to the removable retaining bracket and the active sender unit is attached to the fuel pump swirl pot
High pressure fuel pump maximum operating pressure	1650 bar - 23931.2 lbf/in²
Low pressure fuel pump operating pressure	0.5 bar - 7.25 lbf/in²
Auxiliary low pressure fuel pump	5.5 - bar

Torque Specifications

DESCRIPTION	NM	LB-FT	LB-IN
Air conditioning (A/C) refrigerant lines retaining bolts	10	7	-
Fuel cooler retaining bolts	9	-	80
Fuel tank internal bracket retaining bolt	7	-	62
Fuel tank filler pipe retaining nuts	9	-	80

Fuel tank filler pipe hose clamp	3.5	-	31
Fuel tank shield retaining bolts	45	33	-
Fuel tank shield to fuel tank bolt	10	7	-

PUBLISHED: 18-JAN-2015
2015.0 RANGE ROVER (LG), 310-01

FUEL TANK AND LINES - TDV8 4.4L DIESEL

COMPONENT LOCATION

TDV8 4.4L DIESEL - FUEL TANK AND LINES

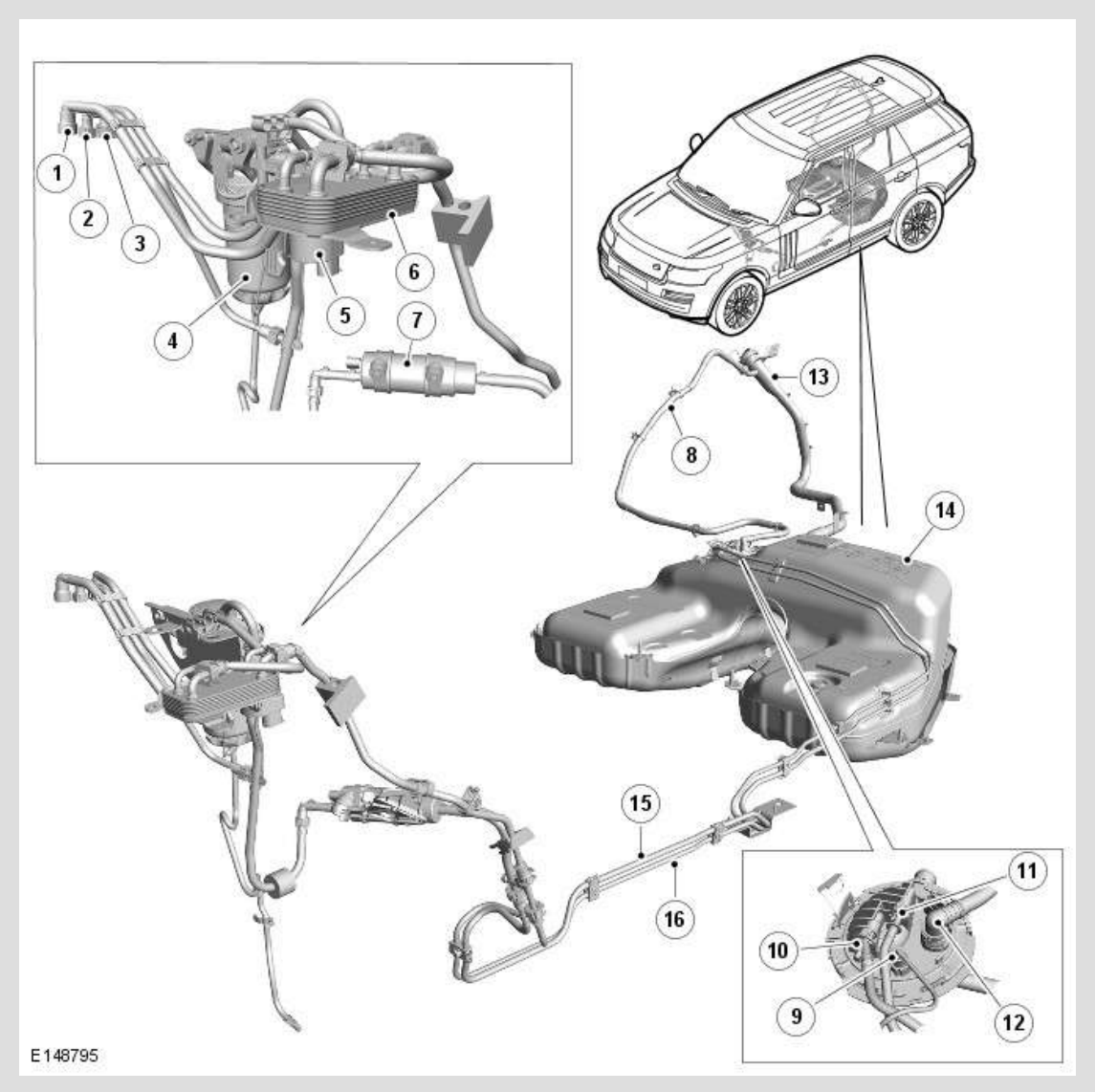

ITEM	DESCRIPTION
1	Fuel Supply To High Pressure Diesel Injector Pump
2	Fuel Injector Leak Off Pipe
3	Fuel Return From High Pressure Diesel Injector Pump to Fuel Cooler
4	Fuel Filter
5	Fuel Heater Module

6	Fuel Cooler
7	Secondary Fuel Pump
8	Fuel Tank Refueling Breather Pipe
9	Fuel Fired Booster Heater Supply
10	Fuel Supply to Secondary Fuel Pump
11	Fuel Return from Fuel Cooler
12	Fuel Tank Refueling Breather Connection
13	Fuel Filler Pipe
14	Fuel Tank
15	Fuel Supply Line
16	Fuel Return Line

OVERVIEW

The TDV8 4.4L diesel engine low pressure fuel system is designed to supply fuel to the high pressure pump via a secondary fuel pump, it can supply a uniform level of pressure to the common rails which supply's the fuel injectors.

DESCRIPTION

FUEL TANK

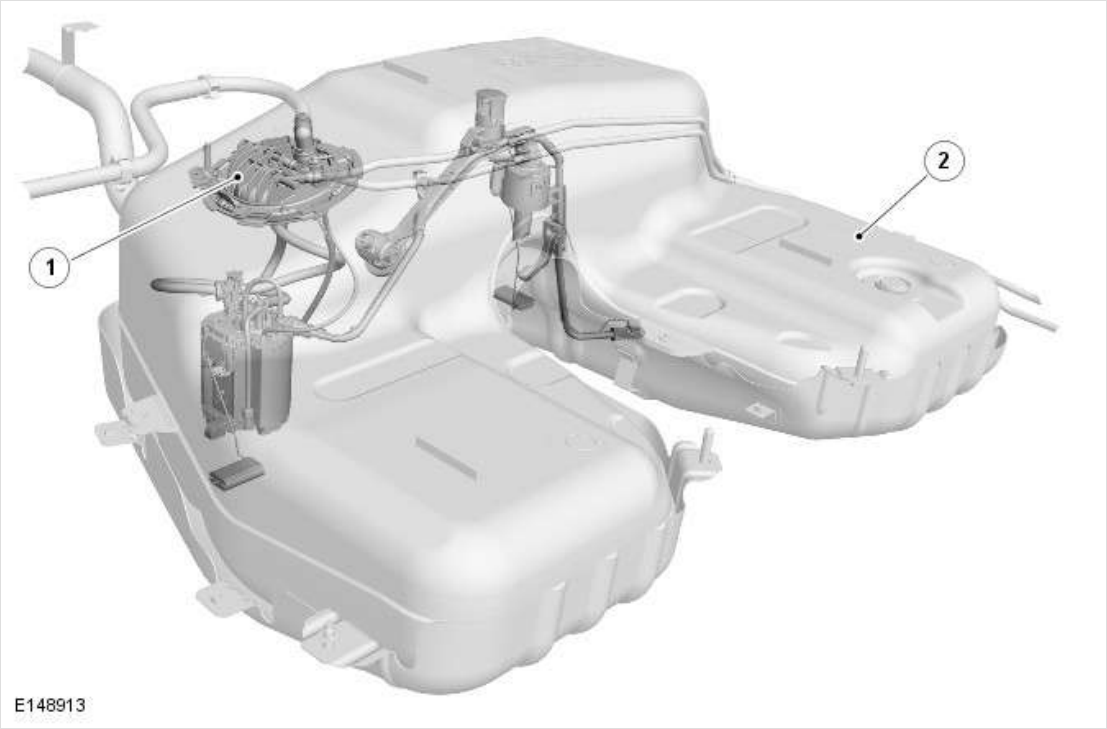

ITEM	DESCRIPTION
1	Fuel Pump Module Tank Flange
2	Fuel Tank

The fuel tank has a storage capacity of 103 liters.

Inside the fuel tank, you will find the location of the low pressure fuel pump module assembly.

Access to the fuel tank is via the removal of the rear seat base and removal of the low pressure pump module flange located on the right side of the tank.

Within the fuel tank in the upper left side center section, a fuel cut-off elbow is positioned. This is to control the fuel fill volume of the tank. During the Refueling process, air/vapor is displaced (by the fuel entering the tank) and exits the tank via the cut-off elbow and is conveyed by the fuel tank Refueling breather pipe to exit the system. During filling, as the tank reaches its full level, the fuel cut-off elbow is closed by the rising fuel and prevents air/vapor passing through to the Refueling breather pipe. The resulting back pressure causes Refueling to stop automatically.

The fuel cut-off elbow is always open when the fuel tank is below full, providing an unrestricted air/vapor outlet to the Refueling breather pipe.

Fuel level inside the tank is monitored by two level sensors that are connected top the instrument cluster.

FUEL PUMP MODULE

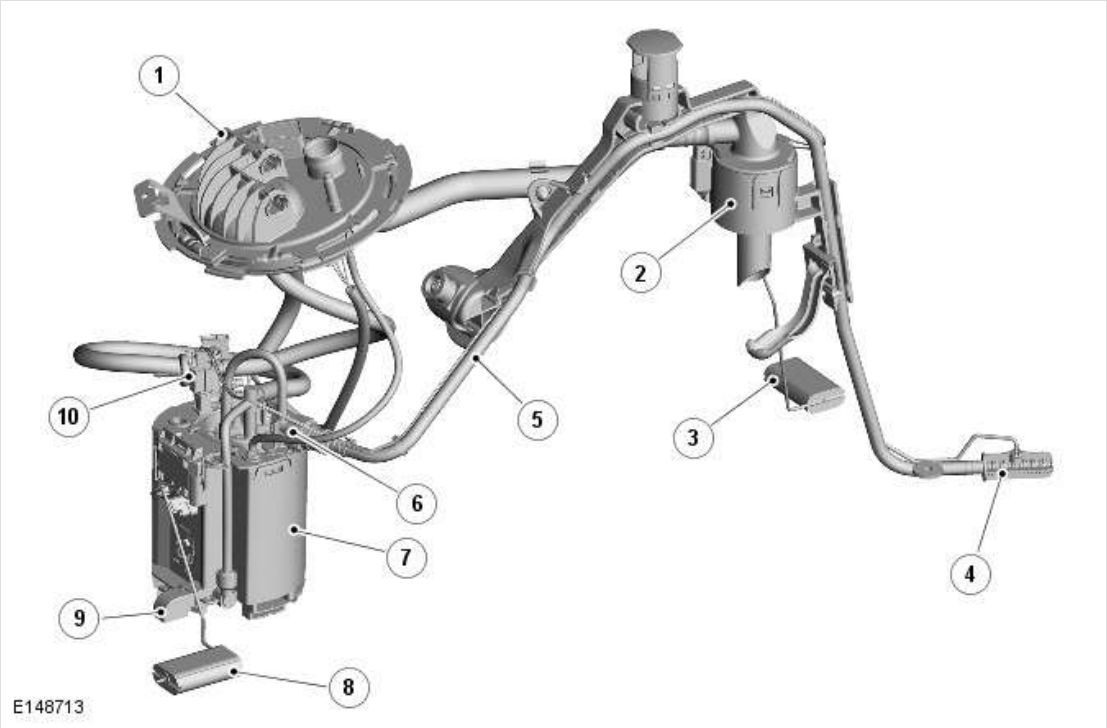

ITEM	DESCRIPTION
1	Fuel Pump Module Tank Flange
2	Fuel Cut-Off Elbow
3	Left Side Fuel Level Sensor Float
4	Suction Port Filter
5	Suction Port Pipe
6	Jet Pump
7	Swirl Pot
8	Right Side Fuel Level Sensor Float
9	Fuel Pump Coarse Filter
10	Pressure Relief Valve

The fuel pump module is controlled by the ECM (engine control module) via the fuel pump relay located in the RJB (rear junction box) .

The electric pump collects fuel from the swirl pot at the base of the pump and passes it from the tank to the fuel supply line to the engine mounted, high pressure pump at a pressure of 0.5 bar.

Fuel is collected from the left side of the tank to the right side of the tank by using a single suction tube that transfers the fuel using a venturi pump which is powered by the fuel feed from the fuel pump.

Should the fuel pump electrical connection need to be disconnected, it is important that the ignition is switched off. If the ignition is on in positions I or II, the instrument cluster will store its last fuel gauge needle position prior to power down. Once power is restored the gauge will display the last stored position regardless of the actual level of fuel in the tank.

This could result in incorrect fuel gauge readings if the fuel tank has been drained and not filled with exactly the same quantity of fuel that was removed.

LOW FUEL STRATEGY

The ECM is programmed with a strategy which shuts the engine off before the fuel tank runs dry. This is to prevent fuel system damage by air being drawn into the high pressure fuel pump.

A misfire is induced with increasing magnitude when the fuel in the tank reaches approximately 2.5 liters of useable fuel remaining to alert the driver to this condition. The engine is shut down when the fuel in the tank reaches 0.00 liters of useable fuel remaining in the tank and 4.0 liters of un-useable fuel remaining.

To reset the fuel strategy after engine shutdown, it is required that a minimum of 4 liters of fuel is added to the fuel tank, when the vehicle is on level ground.

FUEL LEVEL SENSORS

There are two fuel level sensors located inside the fuel tank. One sensor is attached to the swirl pot and monitors fuel level on the right side of the tank. The second sensor is attached to the suction pipe carrier and monitors fuel level on the left side of the tank.

Both level sensors are MAPPS (magnetic passive position sensor) which provide a variable resistance to ground for the output from the fuel gauge.

The electrical output signal is proportional to the amount of fuel in the tank and the position of the float arm. The measured resistance is processed by the instrument cluster to implement an anti-slosh function. This monitors the signal and updates the

fuel gauge pointer position at regular intervals, preventing constant pointer movement caused by fuel movement in the tank due to cornering or braking.

Fuel Level Sensors - Resistance/Fuel Gauge Read Out Table

NOTE:

These figures are with the vehicle on level ground. Sensor readings will defer with varying vehicle inclinations.

Active Side of Fuel Tank

SENDER UNIT RESISTANCE, OHMS	NOMINAL GAUGE READING
992	Empty
51	Full

Passive Side of Fuel Tank

SENDER UNIT RESISTANCE, OHMS	NOMINAL GAUGE READING
992	Empty
281	Full

When the fuel level becomes low, a fuel warning lamp in the instrument cluster is illuminated and message is displayed.

The fuel level sender signal is converted into a CAN (controller area network) message by the IC (instrument cluster) as a direct interpretation of the fuel tank contents in liters.

FUEL COOLER, SECONDARY FUEL PUMP AND FILTER ASSEMBLY

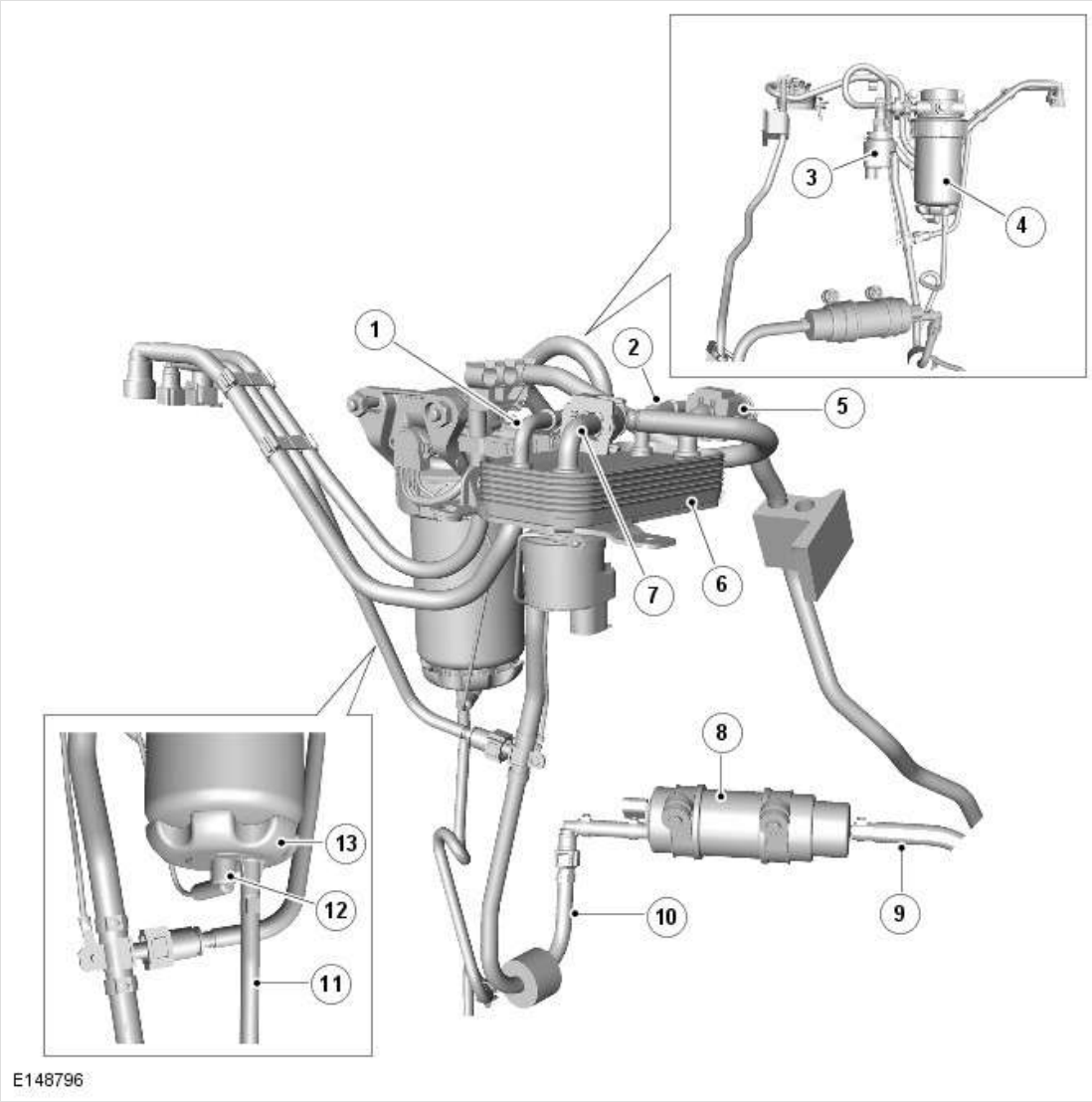

ITEM	DESCRIPTION
1	Coolant Inlet
2	Coolant Outlet
3	Fuel Heater Module
4	Fuel Filter
5	Fuel Cooler Return Pipe to Fuel Tank
6	Fuel Cooler
7	Fuel Cooler Supply Pipe from High Pressure Diesel Injector Pump
8	Secondary Fuel Pump
9	Fuel Supply to Secondary Fuel Pump
10	Fuel Outlet from Secondary Fuel Pump

11	Water/Fuel Mix Drain Hose
12	Water in Fuel Sensor
13	Water/Fuel Mix Drain Turn Wheel

FUEL FILTER

The fuel filter element is located on the underside of the filter housing and is secured into position with a locking ring.

The fuel filter is fitted with a removable water sensor which is secured at the base of the filter. The sensor can be unscrewed and fitted to a new filter.

The water sensor housing also incorporates a water drain plastic turn wheel that allows the water/fuel mix to be drained from the filter via the drain hose to underside of the vehicle.

Water in fuel is sensed by the ECM , the ECM transmits a message on the HS (high speed) CAN powertrain bus to the IC (instrument cluster) which displays a message 'WATER IN FUEL' in the message center.

FUEL HEATER MODULE

The fuel heater module is connected upstream to the inlet port of the fuel filter. The heater module is a self-controlled unit and is activated in to respond to low fuel temperature and increasing system pressure and is powered when the ignition is on.

If the temperature is at or below 2°C ± 2°C (35.6° ± 3.6°F) and the fuel pressure is more than 0.5 bar, the fuel heater module will be activated. When the fuel temperature reaches or exceeds 7°± 2°C (44.6°F ± 3.6°F) or the fuel pressure is at or less than 5.5 bar the ECM will switch off the fuel heater module.

If, during the start of the heating process, the operating voltage is less than 7.5 Volts the heater module will be deactivated.

FUEL COOLER

The fuel cooler is designed to cool fuel returning from the high pressure pump before it is sent back to the fuel tank via the return line. Fuel is cooled by heat transfer through the internal galleries within the coolant assisted fuel cooler.

The fuel cooler is connected to the cooling system. The fuel cooler receives cooled coolant from a dedicated cooler located in front of the engine coolant radiator. This allows for engine coolant to be cooled before it passes through fuel cooler improving the efficiency of the fuel cooling.

SECONDARY FUEL PUMP

The secondary fuel pump is located at the front left side wheel housing and is attached to a mounting bracket. The pump has a fuel inlet from the fuel tank mounted fuel pump module and a pressure outlet to the fuel heater module.

A 2 pin connection provides the connection to the fuel pump relay in the RJB . The pump is active at all times when the fuel pump relay is energised.

The pump has a nominal flow rate of 180 l/hour at a pressure of 5.0 bar, when supply voltage is 12 volts.

FUEL FILLER PIPE

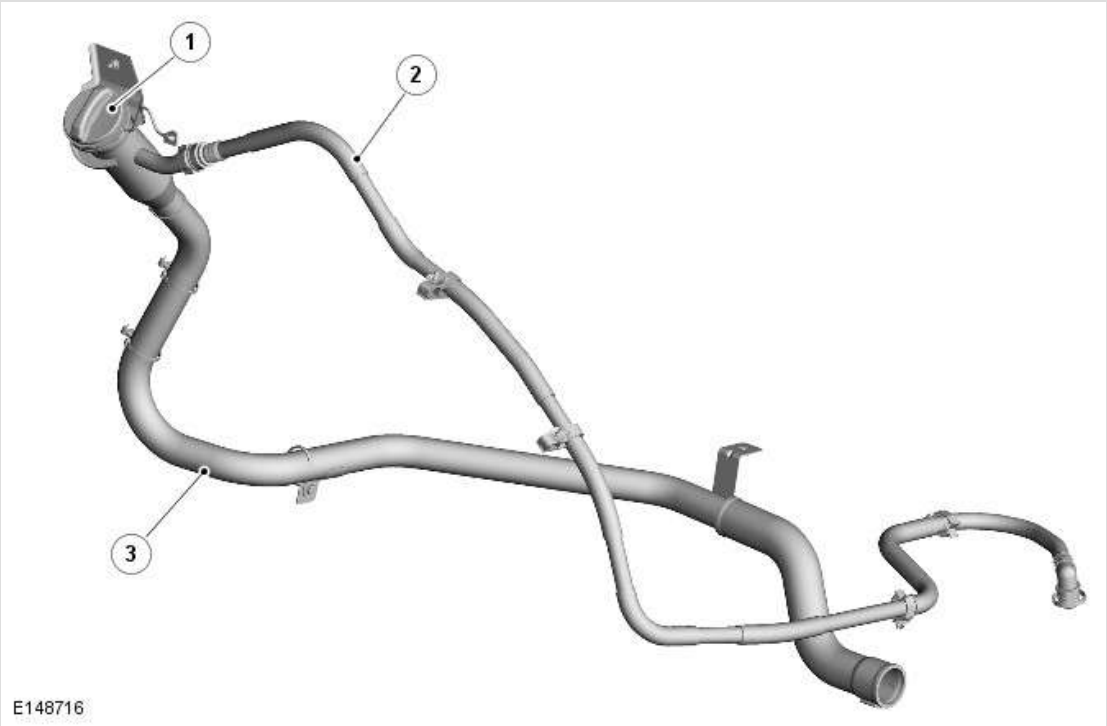

ITEM	DESCRIPTION
1	Fuel Cap
2	Fuel Refueling Breather Pipe
3	Fuel filler Pipe

The fuel filler pipe locates into the tank and incorporates a spit back flap in the tank end of the pipe. The flap is spring loaded cover which acts as one way valve, allowing the tank to be filled but preventing fuel leaving the tank into the filler pipe.

A connection at the top right side of the filler head allows for the connection of the fuel tank refueling breather pipe.

The filler pipe incorporates a fuel guard system to prevent accidental filling of the tank with petrol.

FUEL GUARD

Passive Fuel Guard System

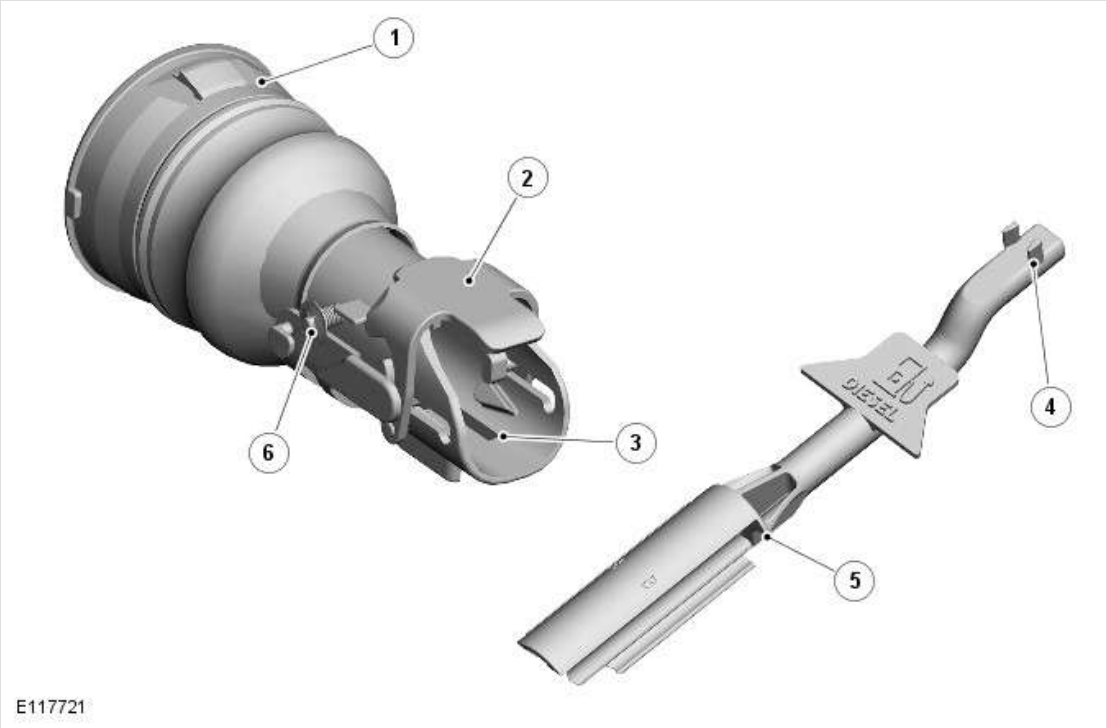

ITEM	DESCRIPTION
1	Filler neck
2	Flap
3	Reset slots
4	Spigots
5	Reset tool
6	Spring

The passive fuel guard system comprises a mechanically operated flap which is triggered when the smaller diameter filler nozzle tube, used on petrol (gasoline) pumps, is inserted in the filler neck. The shut off flap is actuated and blocks the sensor port on the fuel pump nozzle, causing it to automatically switch off. The shut off flap is locked in this position by a latch mechanism, once it has been activated.

A reset tool is provided and stored within the vehicle. The tool is used to reset the fuel guard device if triggered. The tool is inserted into the filler opening as far as possible with the spigots pointing upper most. Once the two spigots on the tool are located in the slots it can be pulled outwards, releasing a latch and allowing the shut off flap to be opened by its own spring pressure.

The shut off flap is colored yellow so that it is clearly visible within the entrance of the fuel filler pipe when activated, the shut off flap has a 'Handbook' symbol on it.

A 25mm diameter diesel fuel pump nozzle will not activate the fuel guard because the nozzle stops against two molded lugs. However, if a 21mm diameter unleaded gasoline pump nozzle is inserted into the housing, its smaller diameter allows it to pass the two molded lugs. The nozzle strikes two pins on the inside of the filler housing which move forward. This movement rotates the shut-off flap which is then held in place when the nozzle is removed by the latch mechanism.

NOTE:

Russian markets do not use the fuel guard system and are fitted with a conventional filler neck.

Active Fuel Guard System

Normal State

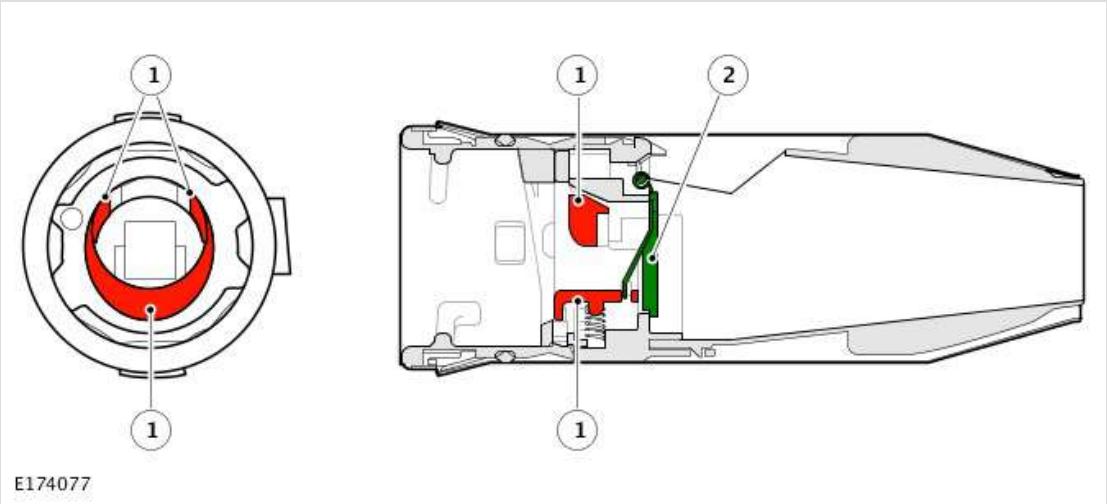

ITEM	DESCRIPTION
1	Sensing tabs in normal state
2	Fuel guard flap closed

Open State

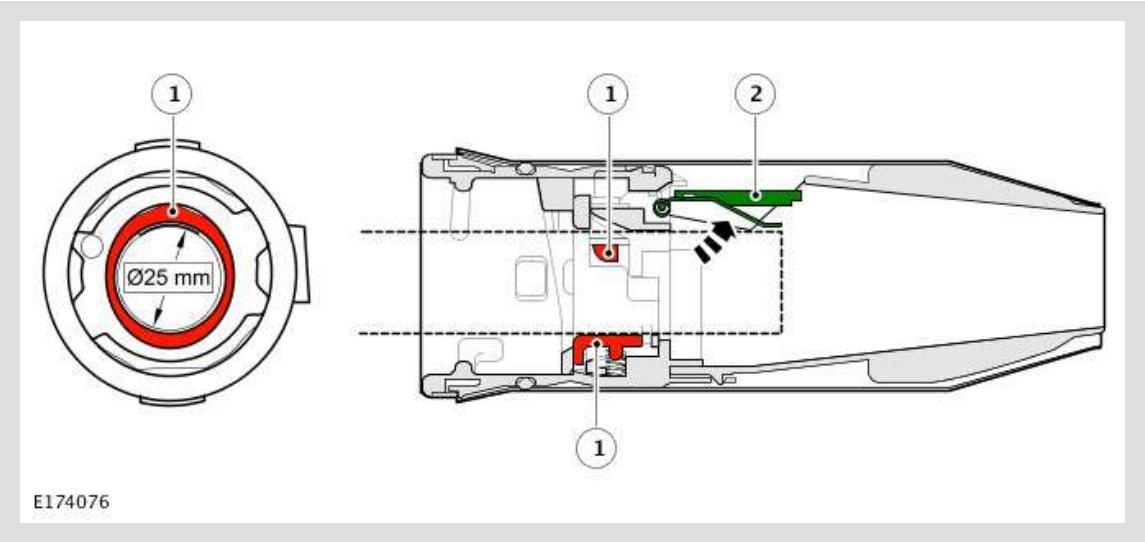

ITEM	DESCRIPTION
1	Sensing tabs in open state
2	Fuel guard flap open

The fuel guard consists of a mechanically-operated flap and three fuel nozzle sensing tabs. When a 25mm diameter diesel fuel filler nozzle tube is inserted into the fuel filler pipe, the three sensing tabs depress releasing the flap into the open position. If a smaller 21mm diameter filler nozzle tube, used on petrol (gasoline) pumps, is inserted in the fuel filler pipe, the three sensing tabs will not depress and the flap will not release, so this blocks the fuel nozzle from entering the filler pipe.

Adaptor Funnel

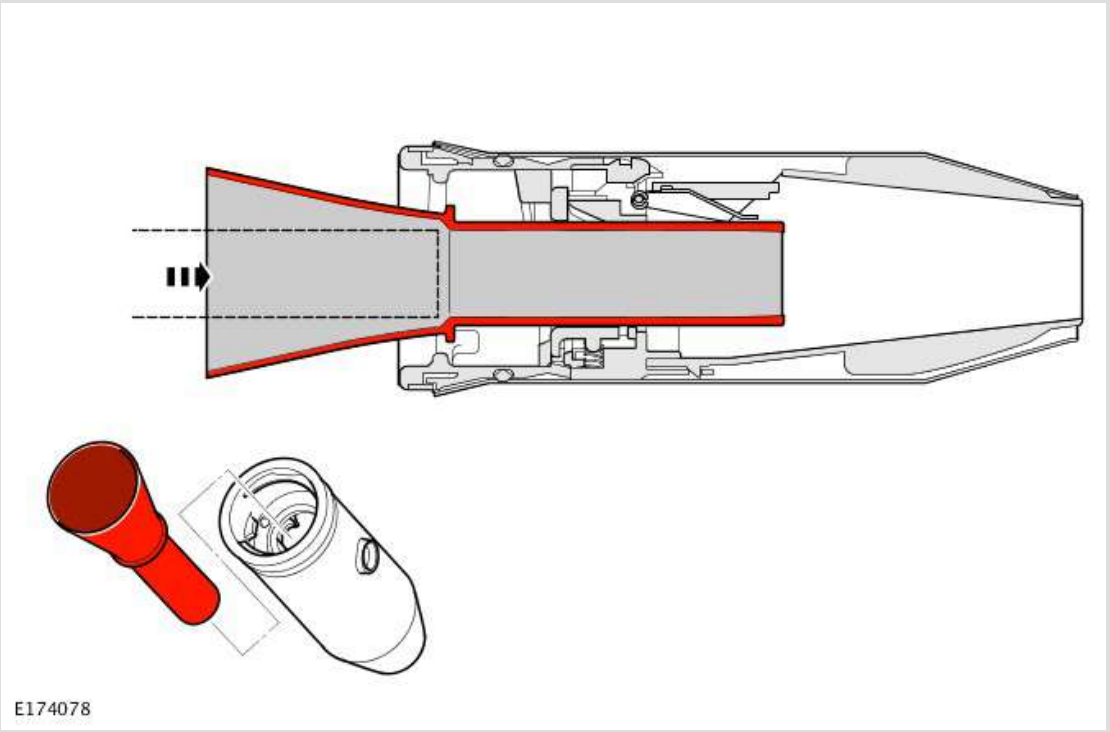

If the vehicle travels to a market where differentiation of fuel nozzle size or if the vehicle runs out of fuel and must be refilled at the road side using a reserve can, then an adaptor funnel is provided to allow the misfuelling device to be temporarily overridden.

The adaptor funnel will be located either in the glove compartment or in the luggage compartment alongside the tool kit.

CONTROL DIAGRAM

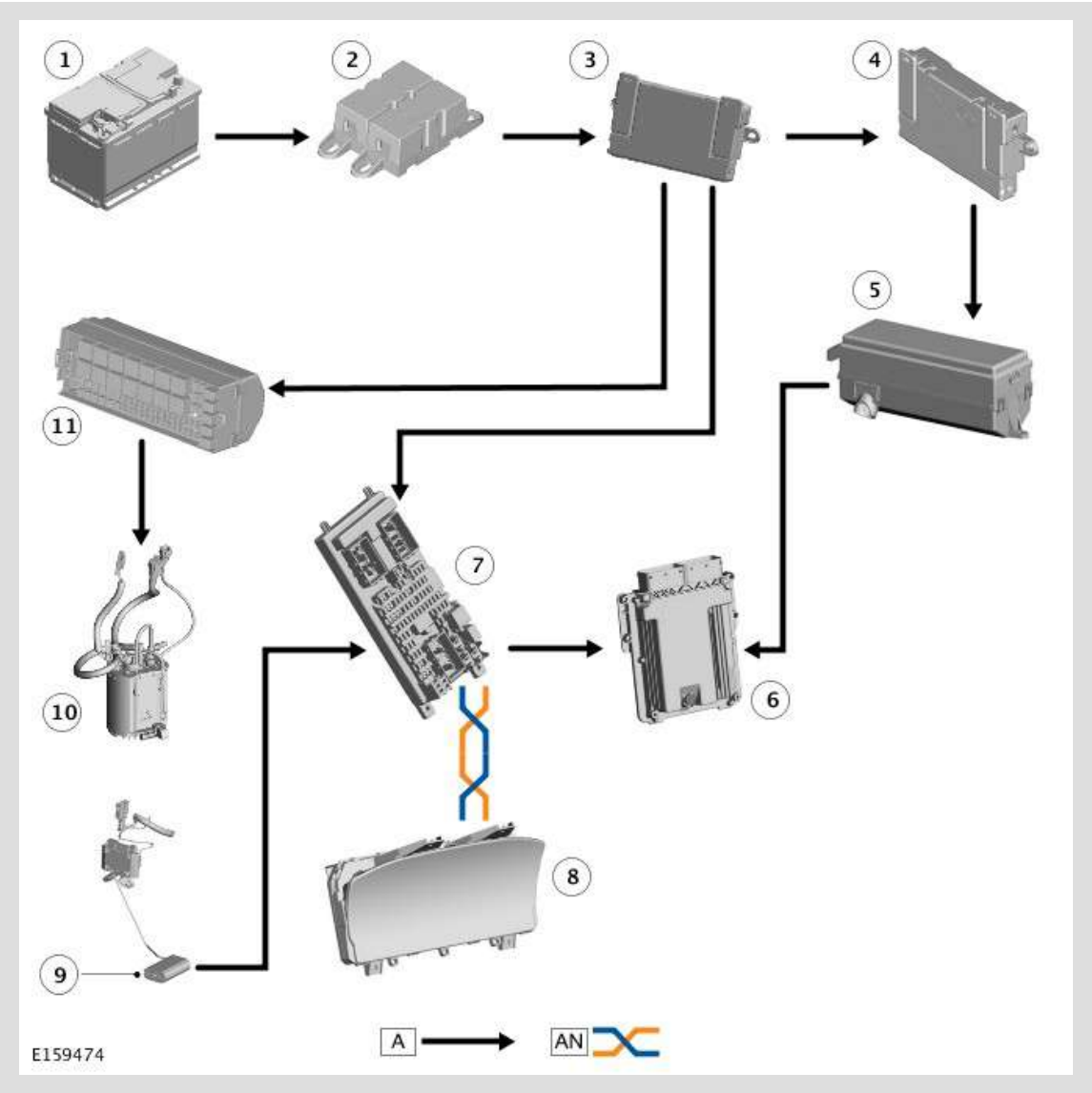

ITEM	DESCRIPTION
1	Battery
2	Battery Junction Box 2 (BJB2)
3	Battery Junction Box (BJB)
4	Auxiliary Junction Box (AJB)
5	Engine Junction Box (EJB)
6	Engine Control Module (ECM)
7	Central Junction Box (CJB)
8	Instrument Cluster (IC)
9	Fuel Level Sensor (2 Of)
10	Low Pressure Fuel Pump

11	Rear Junction Box (RJB)

PUBLISHED: 29-JUL-2017
2015.0 RANGE ROVER (LG), 310-01

FUEL TANK AND LINES - TDV8 4.4L DIESEL

PRINCIPLE OF OPERATION

For a detailed description of the fuel tank and lines system and operation, refer to the relevant Description and Operation section of the workshop manual.
REFER to: Fuel Tank and Lines (310-01D Fuel Tank and Lines - TDV8 4.4L Diesel, Description and Operation).

INSPECTION AND VERIFICATION

WARNINGS:

- Do **NOT** carry out any work on the fuel system with the engine running. The fuel pressure within the system can be as high as 1600 bar (23,206 lb/in²). Failure to follow this instruction may result in personal injury.
- Eye protection must be worn at all times when working on or near any fuel related components. Failure to follow this instruction may result in personal injury.
- This procedure involves fuel handling. Be prepared for fuel spillage at all times and always observe fuel handling precautions. Failure to follow this instruction may result in personal injury.
- After carrying out repairs, the fuel system must be checked visually for leaks. This should be done after the engine has been run, but with the engine switched **OFF** . Failure to follow this instruction may result in personal injury.
- If taken internally, **DO NOT** induce vomiting. Seek immediate medical attention. Failure to follow this instruction may result in personal injury.
- If fuel contacts the eyes, flush the eyes with cold water or eyewash solution and seek medical attention. Failure to follow this instruction may result in personal injury.
- Wash hands thoroughly after handling, as prolonged contact may cause irritation. Should irritation develop, seek medical attention. Failure to follow this instruction may result in personal injury.

CAUTIONS:

- Before disconnecting any part of the system, it is imperative that all dust, dirt and debris is removed from around components to prevent ingress of foreign matter into the fuel system. Failure to follow this instruction may result in damage to the vehicle.
- The fuel pipes between the injectors and the rail must be discarded after each use, and new pipes installed. Failure to follow this instruction may result in damage to the vehicle.
- It is essential that absolute cleanliness is observed when working with these components. Always install blanking plugs to any open orifices or lines. Failure to follow this instruction may result in damage to the vehicle.
- Make sure that the workshop area in which the vehicle is being worked on is as clean and dust-free as possible. Areas in which work on clutches, brakes or where welding or machining are carried out are not suitable in view of the risk of contamination to the fuel system. Failure to follow this instruction may result in damage to the vehicle.
- Make sure that any protective clothing worn is clean and made from lint-free non-flocking material. Failure to follow this instruction may result in damage to the vehicle.
- Make sure that any protective gloves worn are new and are of the non-powdered latex type. Failure to follow this instruction may result in damage to the vehicle.
- Make sure that clean, non-plated tools are used. Clean tools using a new brush that will not lose it's bristles and fresh cleaning fluid prior to starting work on the vehicle. Failure to follow this instruction may result in damage to the vehicle.
- Use a steel-topped work bench and cover it with clean, lint-free, non-flocking material. Failure to follow this instruction may result in damage to the vehicle.
- Diagnosis by substitution from a donor vehicle is **NOT** acceptable. Substitution of control modules does not guarantee confirmation of a fault and may also cause additional faults in the vehicle being checked and/or the donor vehicle.

NOTES:

- Check and rectify basic faults before beginning diagnostic routines involving pinpoint tests.
- When measuring fuel sender resistance values with a multimeter, it is critical to use the correct multimeter setting. The multimeter should **not** be on the 'Auto' setting and **must** be set to 'Manual'. This will help prevent incorrect diagnosis and unnecessary replacement of fuel senders. If the multimeter range is set at 'Auto' then, during a sweep of the sender from 50 Ohms to

998 Ohms, the multimeter has to change its measurement range. For approximately 1 second, during the range switch over point, the multimeter display indicates an open circuit. This can lead to a mis-diagnosis of a fuel sender fault.

1. Verify the customer concern.

1. Visually inspect for obvious signs of mechanical or electrical damage.

Visual Inspection

MECHANICAL	ELECTRICAL
▪ Fuel level ▪ Contaminated fuel ▪ Fuel supply line(s) ▪ Fuel return line(s) ▪ High-pressure fuel supply line(s) ▪ Fuel tank filler pipe ▪ Fuel leak(s) ▪ Fuel tank ▪ Fuel filler cap ▪ Fuel filter ▪ Push connect fittings ▪ Fuel rail ▪ Fuel injection pump ▪ Exhaust gas recirculation system	▪ Battery charge and condition ▪ Fuse(s) ▪ Fuel pump module relay ▪ Fuel pump module ▪ Electrical connector(s) ▪ Damaged or corroded wiring harness ▪ Fuel volume control valve ▪ Fuel pressure control valve ▪ Engine control module

1. If an obvious cause for an observed or reported concern is found, correct the cause (if possible) before proceeding to the next step.

1. If the cause is not visually evident, verify the symptom and refer to the Symptom Chart, alternatively check for Diagnostic Trouble Codes (DTCs) and refer to the DTC Index.

SYMPTOM CHART

SYMPTOM	POSSIBLE CAUSES	ACTION
Engine cranks, but does not start	▪ Low /contaminated fuel	Check the fuel level and condition. Check the low pressure fuel pump operation. Using the manufacturer approved diagnostic system, perform routine - Inline diagnostic unit 2 non-intrusive test - Low pressure fuel pump. Draw off approximately 1 ltr

		▪ Air leakage ▪ Low-pressure fuel system fault ▪ Fuel pump module (lift pump) fault ▪ Blocked fuel filter ▪ Fuel volume regulator blocked /contaminated ▪ Fuel pressure control valve blocked /contaminated ▪ Fuel pump fault ▪ Crankshaft position sensor	(2.11 pints) of fuel and allow to stand for 1 minute. Check to make sure there is no separation of the fuel indicating water or other liquid in the fuel. Check the intake air system for leaks. Check the lift pump operation, check the low-pressure fuel system for leaks/damage. Check the fuel filter, check for DTCs indicating a fuel volume or pressure control valve fault. Check the fuel pump. Check the crankshaft position sensor circuits. Refer to the electrical guides
	Difficult to start	▪ Glow plug system fault (very cold conditions) ▪ Low /contaminated fuel ▪ Air leakage ▪ Fuel pump module (lift pump) fault ▪ Low-pressure fuel system fault ▪ Blocked fuel filter ▪ Fuel volume control valve blocked /contaminated ▪ Fuel pressure control valve blocked /contaminated ▪ Exhaust gas recirculation valve(s) fault	Check the glow plug circuits. Refer to the electrical guides. Check the fuel level/condition. Draw off approximately 1 ltr (2.11 pints) of fuel and allow to stand for 1 minute. Check to make sure there is no separation of the fuel indicating water or other liquid in the fuel. Check the intake air system for leaks. Check the lift pump operation, check the low-pressure fuel system for leaks/damage. Check the low pressure fuel pump operation. Using the manufacturer approved diagnostic system, perform routine - Inline diagnostic unit 2 non-intrusive test - Low pressure fuel pump. Check the fuel filter, check for DTCs indicating a fuel volume or pressure control valve fault. Check the exhaust gas recirculation system
	Rough idle	▪ Intake air system fault	Check the intake air system for leaks. Check the fuel level /condition. Draw off approximately 1 ltr (2.11 pints) of fuel and allow to stand for 1 minute. Check to make sure there is no separation of the fuel indicating water or other liquid in the fuel. Check the low-pressure fuel system for leaks/damage. Check

	▪ Low /contaminated fuel ▪ Low-pressure fuel system fault ▪ Blocked fuel filter ▪ Fuel volume control valve blocked /contaminated ▪ Fuel pressure control valve blocked /contaminated ▪ Exhaust gas recirculation valve(s) fault	the low pressure fuel pump operation. Using the manufacturer approved diagnostic system, perform routine - Inline diagnostic unit 2 non-intrusive test - Low pressure fuel pump. Check the fuel filter, check for DTCs indicating a fuel volume or pressure control valve fault. Check the exhaust gas recirculation system
Lack of power when accelerating	▪ Intake air system fault ▪ Restricted exhaust system ▪ Low fuel pressure ▪ Exhaust gas recirculation valve(s) fault ▪ Turbocharger actuator fault	Check the intake air system for leakage or restriction. Check for a blockage/restriction in the exhaust system, install new components as necessary. Check the low pressure fuel pump operation. Using the manufacturer approved diagnostic system, perform routine - Inline diagnostic unit 2 non-intrusive test - Low pressure fuel pump. Check for DTCs indicating a fuel pressure fault. Check the exhaust gas recirculation system. Check turbocharger actuator
Engine stops /stalls	▪ Air leakage ▪ Low /contaminated fuel ▪ Low-pressure fuel system fault ▪ High pressure fuel leak ▪ Fuel volume control valve blocked /contaminated ▪ Fuel pressure control valve blocked /contaminated ▪ Exhaust gas recirculation valve(s) fault	Check the intake air system for leaks. Check the fuel level /condition. Draw off approximately 1 ltr (2.11 pints) of fuel and allow to stand for 1 minute. Check to make sure there is no separation of the fuel indicating water or other liquid in the fuel. Check the fuel system for leaks/damage: Check for DTCs indicating a fuel volume or pressure control valve fault. Check the exhaust gas recirculation system

Engine judders	▪ Low /contaminated fuel ▪ Air ingress ▪ Low-pressure fuel system fault ▪ Fuel metering valve blocked /contaminated ▪ Fuel volume control valve blocked /contaminated ▪ Fuel pressure control valve blocked /contaminated ▪ High pressure fuel leak ▪ Fuel pump fault	Check the fuel level/condition. Draw off approximately 1 ltr (2.11 pints) of fuel and allow to stand for 1 minute. Check to make sure there is no separation of the fuel indicating water or other liquid in the fuel. Check the intake air system for leaks. Check the low-pressure fuel system for leaks/damage. Check the low pressure fuel pump operation. Using the manufacturer approved diagnostic system, perform routine - Inline diagnostic unit 2 non-intrusive test - Low pressure fuel pump. Check the high pressure fuel system for leaks, check for DTCs indicating a fuel volume or pressure control valve fault. Check the fuel pump
Excessive fuel consumption	▪ Low-pressure fuel system fault ▪ Fuel volume control valve blocked /contaminated ▪ Fuel pressure control valve blocked /contaminated ▪ Fuel temperature sensor leak ▪ High pressure fuel leak ▪ Injector(s) fault ▪ Exhaust gas recirculation valve(s) fault	Check the low-pressure fuel system for leaks/damage. Check the low pressure fuel pump operation. Using the manufacturer approved diagnostic system, perform routine - Inline diagnostic unit 2 non-intrusive test - Low pressure fuel pump. Check for DTCs indicating a fuel volume or pressure control valve fault. Check the fuel temperature sensor, fuel pump, etc for leaks. Check for injector DTCs. Check the exhaust gas recirculation system

MIS-FUELLING ISSUES / ACCIDENTALLY FILLING THE FUEL TANK WITH GASOLINE INSTEAD OF DIESEL

NOTES:

- The customer MUST be informed prior to vehicle hand-over of the consequences of adding gasoline to the fuel tank instead of diesel.
- The cost of this repair work is not Jaguar Land Rover's responsibility. If the customer does not have all of the appropriate work carried out, warranty may be refused on all affected components.
- If the customer refuses the advised repair or wants a lower level repair than advised, the vehicle must be added to the Restricted Warranty Register.
- Vehicle mis-fuelling will not result in a formal warranty restriction if the approved repair has been completed.
- The symptom charts below describe the four possible scenarios of a customer incorrectly fuelling a diesel engine vehicle with gasoline. When customers report a mis-fuel, allow them to fully explain exactly what took place before advising the necessary repair.
- The procedures listed below are for guidance only. The relevant sections of TOPIx must be referred to for all detailed procedures and replacement of parts.
- Purge operation of the low pressure fuel pumps on the following vehicle lines is activated when the drivers door is opened: Jaguar XE, Jaguar XF, Jaguar F-Pace. For all other vehicle lines, the purge operation of the low pressure fuel pumps is activated when the ignition is switched on.

Mis-fuelling Procedure 1

SYMPTOM	POSSIBLE CAUSES	ACTION
Mis-fuelling issue. The diesel fuel tank has been filled with gasoline	The vehicle has been incorrectly fuelled and the ignition switch has **NOT** been switched to **ON**	▪ 1. Referring to the relevant section in the workshop manual, drain the fuel tank ▪ 2. Remove the fuel tank assembly ▪ 3. Remove the primary fuel pump /sender module and in-tank transfer pipe. Invert the pump/sender module to drain excess fuel ▪ 4. Remove all traces of residual fuel within the fuel tank using clean absorbent cloth/paper ▪ 5. Flush the pump/sender module and in tank transfer pipe with clean diesel ▪ 6. Reassemble the pump/sender module and in tank transfer pipe to the fuel tank and install to the vehicle ▪ 7. Fully fill the fuel tank with clean diesel ▪ 8. Road test the vehicle for at least 10 miles/16Km ▪ 9. Return the vehicle to the customer

Mis-fuelling Procedure 2

SYMPTOM	POSSIBLE CAUSES	ACTION
Mis-fuelling issue. The diesel fuel tank has been filled with gasoline	The vehicle has been incorrectly fuelled and the ignition switch has been switched to the **ON** position	▪ 1. Referring to the relevant section in the workshop manual, drain the fuel tank ▪ 2. Remove the fuel pump module and fuel level sensor ▪ 3. Remove all traces of residual fuel within the fuel tank using clean absorbent cloth/paper ▪ 4. Invert the fuel pump module and fuel level sensor to remove all traces of residual fuel ▪ 5. Remove the fuel filter and discard ▪ 6. Disconnect the fuel feed to the high-pressure fuel pump ▪ 7. Flush all the fuel lines with clean diesel ▪ 8. Reassemble the fuel pump module and fuel level sensor to the fuel tank ▪ 9. Install a new fuel filter ▪ 10. Fully fill the fuel tank with clean diesel ▪ 11. Road test the vehicle for at least 10 miles/16Km, checking for normal engine operation and no stored DTC'S ▪ 12. Return the vehicle to the customer

Mis-fuelling Procedure 3

SYMPTOM	POSSIBLE CAUSES	ACTION
Mis-fuelling issue. The diesel fuel tank has been filled with gasoline	The vehicle has run for less than two minutes	▪ 1. Referring to the relevant section in the workshop manual, drain the fuel tank ▪ 2. The residual fuel from all removed parts needs to be checked for metal particles using a magnet ▪ 3. Remove the fuel pump module and fuel level sensor ▪ 4. Remove all traces of residual fuel within the fuel tank using clean absorbent cloth /paper ▪ 5. Invert the fuel pump module and fuel level sensor to remove all traces of residual fuel

		▪ 6. Remove the fuel filter and discard ▪ 7. Disconnect the fuel feed to the high-pressure fuel pump ▪ 8. Flush all the fuel lines with clean diesel ▪ 9. If no metal particles are detected, go to step 11 ▪ 10. If metal particles are present, go to procedure 4 and carry out step 3 to step 8 ▪ 11. Reassemble the fuel pump module and fuel level sensor to the fuel tank ▪ 12. Install a new fuel filter ▪ 13. Fully fill the fuel tank with clean diesel ▪ 14. Road test the vehicle for at least 10 miles/16Km, checking for normal engine operation and no DTC'S ▪ 15. Return the vehicle to the customer

Mis-fuelling Procedure 4

SYMPTOM	POSSIBLE CAUSES	ACTION
Mis-fuelling issue. The diesel fuel tank has been filled with gasoline	The vehicle has been driven until it stops or over two minutes. The entire fuel system will need reworking	▪ 1. Referring to the relevant section in the workshop manual, drain the fuel tank ▪ 2. Clean and flush all the low pressure fuel pipes ▪ 3. Replace the fuel filter ▪ 4. Replace the high pressure fuel pump ▪ 5. Replace all the high pressure fuel pipes ▪ 6. Replace the diverter pipe and both fuel rails ▪ 7. Replace the fuel cooler ▪ 8. Replace all the fuel injectors ▪ 9. Remove the fuel pump module and fuel level sensor ▪ 10. Remove all the traces of residual fuel within the fuel tank using clean absorbent cloth/paper ▪ 11. Invert the fuel pump module and fuel level sensor to remove all the traces of residual fuel ▪ 12. Reassemble the fuel pump module and fuel level sensor to the fuel tank ▪ 13. Fully fill the fuel tank with clean diesel ▪ 14. Road test the vehicle for at least 10 miles/16Km, checking for normal engine operation and that no stored diagnostic trouble codes are logged ▪ 15. Return the vehicle to the customer

DTC INDEX

For a complete list of all Diagnostic Trouble Codes (DTCs) that could be logged on this vehicle, please refer to Section 100-00.

REFER to: Diagnostic Trouble Code Index - TDV8 4.4L Diesel, DTC: Engine Control Module (ECM) (100-00 General Information, Description and Operation).

PUBLISHED: 09-DEC-2014
2015.0 RANGE ROVER (LG), 310-01

FUEL TANK AND LINES - TDV8 4.4L DIESEL

AUXILIARY FUEL COOLER (G1509641)

19.25.35	FUEL COOLER - AUXILIARY - RENEW	4400 CC, TDV8	0.7	USED WITHINS

REMOVAL

WARNINGS:

- The spilling of fuel is unavoidable during this operation. Ensure that all necessary precautions are taken to prevent fire and explosion.
- Do not carry or operate cellular phones when working on or near any fuel related components. Highly flammable vapors are always present and may ignite. Failure to follow these instructions may result in personal injury.
- Do not smoke or carry lighted tobacco or open flame of any type when working on or near any fuel related components. Highly flammable mixtures are always present and may ignite. Failure to follow these instructions may result in personal injury.
- If fuel contacts the eyes, flush the eyes with cold water or eyewash solution and seek medical attention.

CAUTION:

Diesel fuel injection equipment is manufactured to very precise tolerances and fine clearances. It is therefore essential that absolute cleanliness is observed when working with these components. Always install blanking plugs to any open orifices or lines. Failure to follow this instruction may result in foreign matter ingress to the fuel injection system.

NOTES:

- Removal steps in this procedure may contain installation details.
- Some variation in the illustrations may occur, but the essential information is always correct.

1. For additional information, refer to: Cooling System Partial Draining and Vacuum Filling (303-03A Engine Cooling - TDV6 3.0L Diesel - Gen 2/TDV6 3.0L Diesel - Gen 1.5, General Procedures).

2.

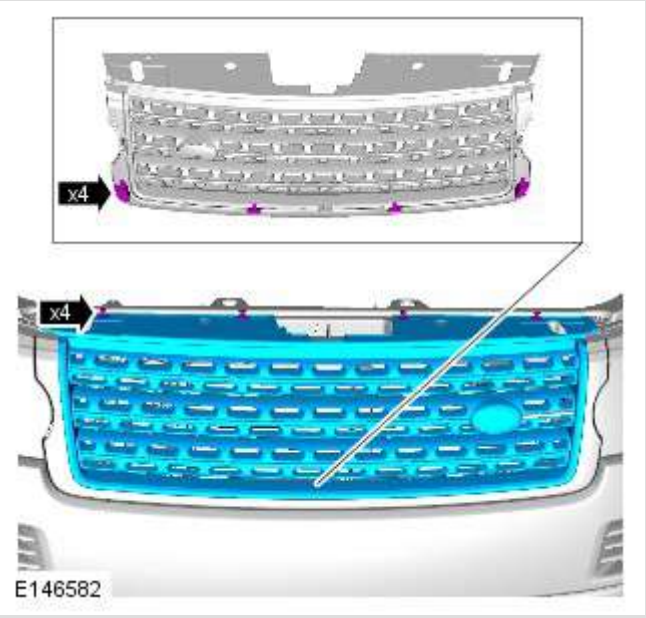

3.

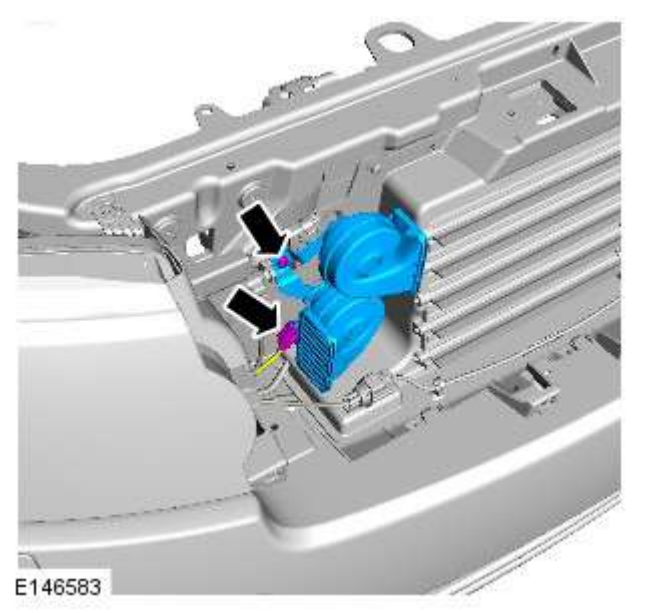

4.

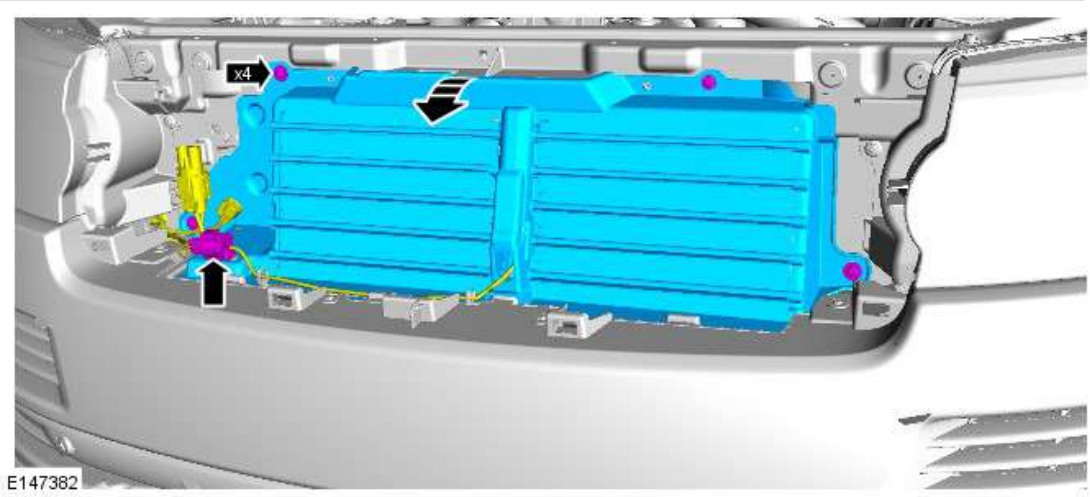

5.

WARNING:

The spilling of fuel is unavoidable during this operation. Make sure that all necessary precautions are taken to prevent fire and explosion.

NOTE:

Make sure that all openings are sealed. Use new blanking caps.

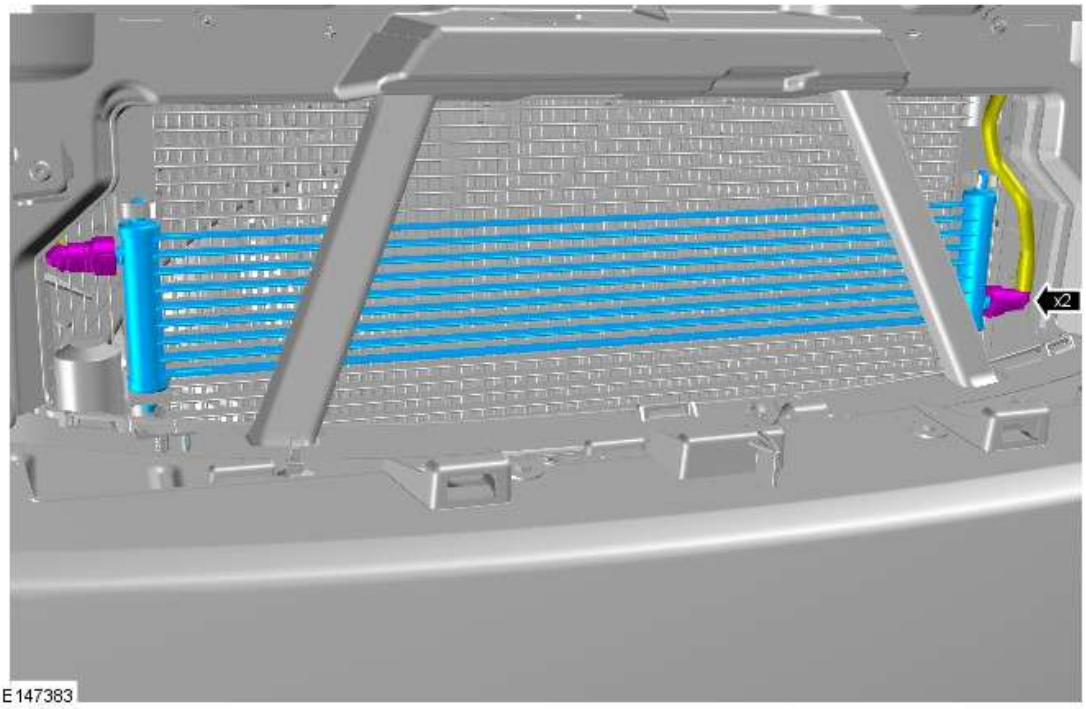

INSTALLATION

1. To install reverse the removal procedure.

PUBLISHED: 07-JUN-2017
2015.0 RANGE ROVER (LG), 310-01

FUEL TANK AND LINES - TDV8 4.4L DIESEL

FUEL COOLER (G1509642)

19.55.04	DOOR - FUEL FILLER - RENEW	ALL DERIVATIVES	0.1	USED WITHINS

REMOVAL

WARNINGS:

- The spilling of fuel is unavoidable during this operation. Ensure that all necessary precautions are taken to prevent fire and explosion.
- Do not smoke or carry lighted tobacco or open flame of any type when working on or near any fuel related components. Highly flammable vapors are always present and may ignite. Failure to follow these instructions may result in personal injury.
- Do not carry or operate cellular phones when working on or near any fuel related components. Highly flammable vapors are always present and may ignite. Failure to follow these instructions may result in personal injury.
- Do not carry or operate cellular phones when working on or near any fuel related components. Highly flammable vapors are always present and may ignite. Failure to follow these instructions may result in personal injury.

CAUTIONS:

- Be prepared to collect escaping fuel.
- Before disconnecting or removing components, ensure the area around the joint faces and connections are clean. Plug open connections to prevent contamination.

NOTE:

Removal steps in this procedure may contain installation details.

1. Disconnect the battery ground cable.
Refer to: Specifications (414-00 Battery and Charging System - General Information, Specifications).

2. Refer to: Left Air Cleaner (303-12E Intake Air Distribution and Filtering - TDV8 4.4L Diesel, Removal and Installation).

3.

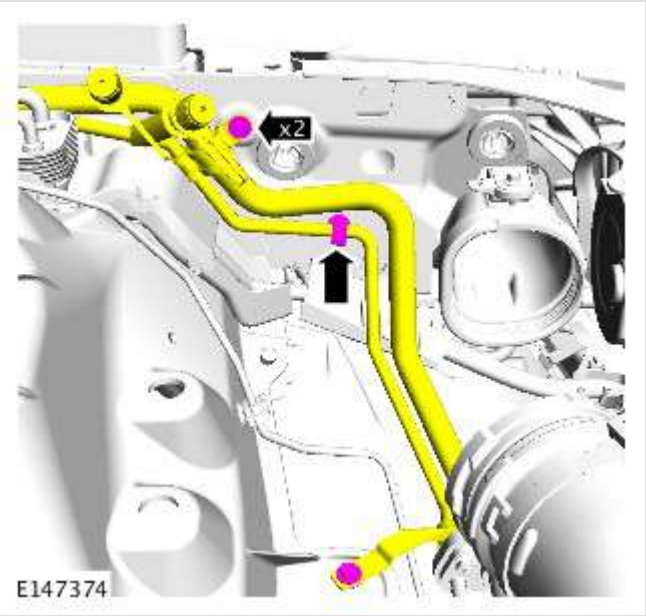

Torque: **10 Nm**

4.

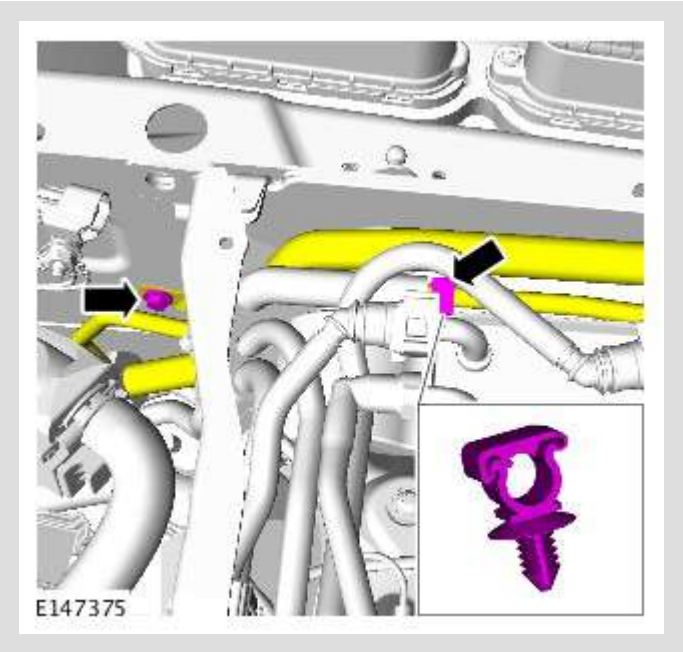

Torque: **10 Nm**

5.

CAUTIONS:

- Be prepared to collect escaping coolant.
- Before disconnecting any components, make sure the area is clean and free from foreign material. When disconnected all openings must be sealed.

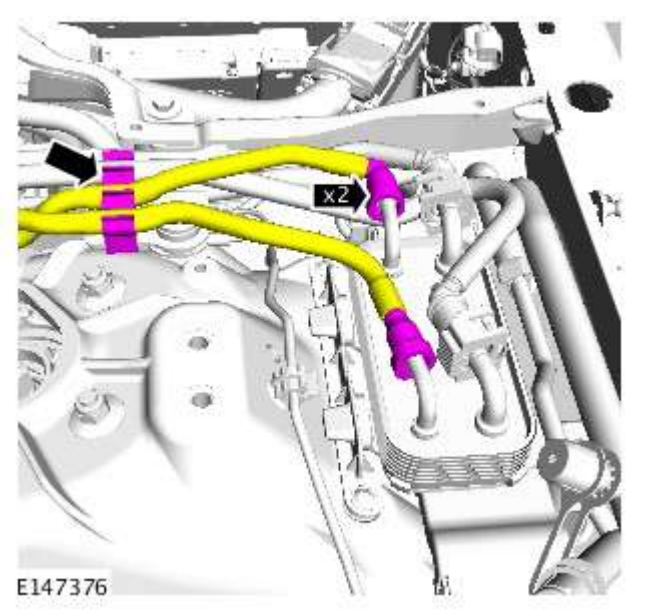

6.

CAUTIONS:

- Before disconnecting any components, make sure the area is clean and free from foreign material. When disconnected all openings must be sealed.
- Be prepared to collect escaping fuel.

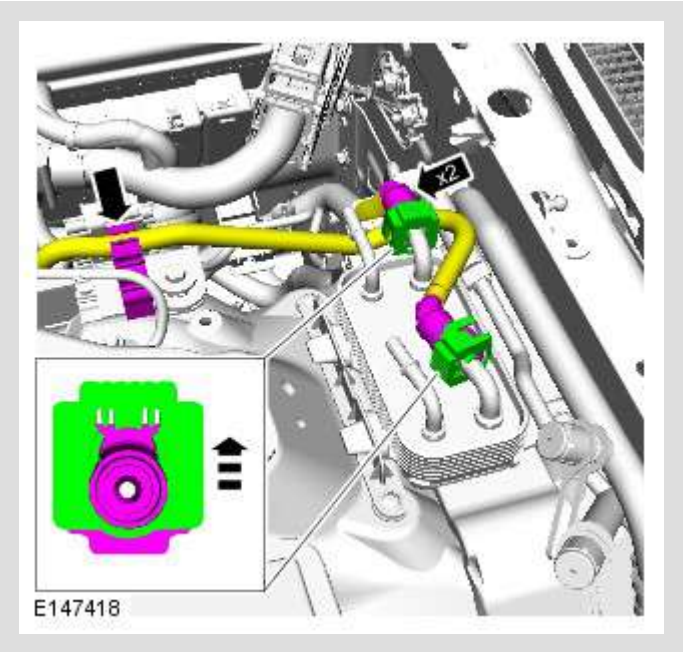

7.

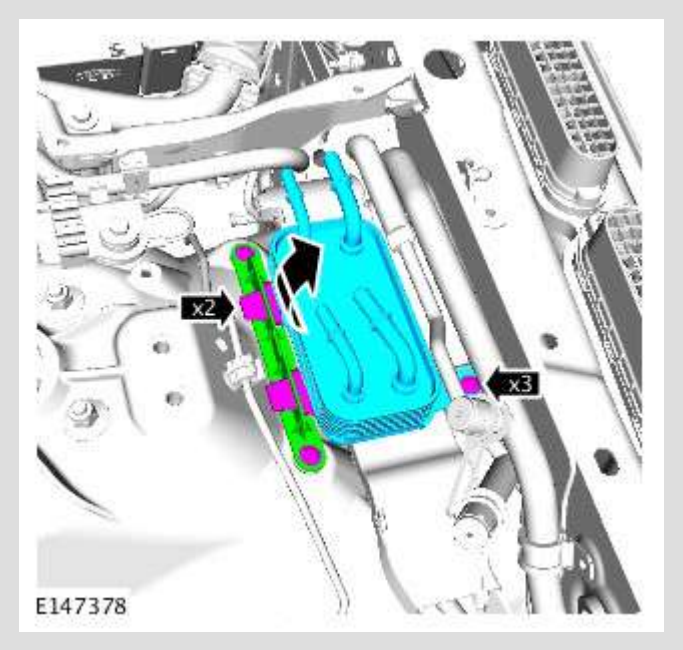

Torque: **10 Nm**

INSTALLATION

1. To install reverse the removal procedure.

PUBLISHED: 09-AUG-2012
2015.0 RANGE ROVER (LG), 310-01

FUEL TANK AND LINES - TDV8 4.4L DIESEL

FUEL FILTER ELEMENT (G1509643)

19.25.07	ELEMENT - MAIN FILTER - RENEW	4400 CC, TDV8	0.2	USED WITHINS

REMOVAL

WARNINGS:

- Diesel fuel injection equipment is manufactured to very precise tolerances and fine clearances. It is therefore essential that absolute cleanliness is observed when working with these components. Always install new blanking plugs to any open orifices or lines. Failure to follow this instruction may result in foreign matter ingress to the fuel injection system.
- The spilling of fuel is unavoidable during this operation. Make sure that all necessary precautions are taken to prevent fire and explosion.
- Do not carry or operate cellular phones when working on or near any fuel related components. Highly flammable vapors are always present and may ignite. Failure to follow these instructions may result in personal injury.
- Do not smoke or carry lighted tobacco or open flame of any type when working on or near any fuel related components. Highly flammable vapors are always present and may ignite. Failure to follow these instructions may result in personal injury.
- If fuel contacts the eyes, flush the eyes with cold water or eyewash solution and seek immediate medical attention.
- Wash hands thoroughly after fuel handling, as prolonged contact may cause irritation. Should irritation develop, seek medical attention.

NOTE:

Removal steps in this procedure may contain installation details.

1. Refer to: Diesel Fuel System Health and Safety Precautions (100-00 General Information, Description and Operation).

2. Disconnect the battery ground cable.
Refer to: Specifications (414-00 Battery and Charging System - General Information, Specifications).

3.

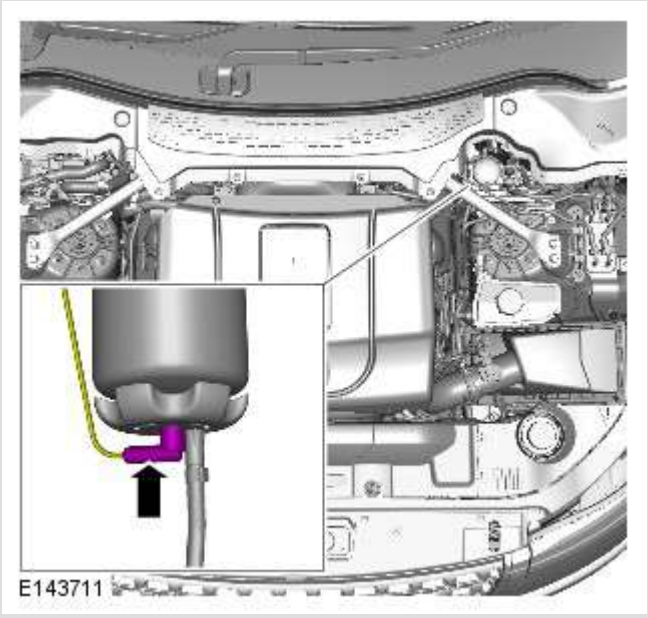

4.

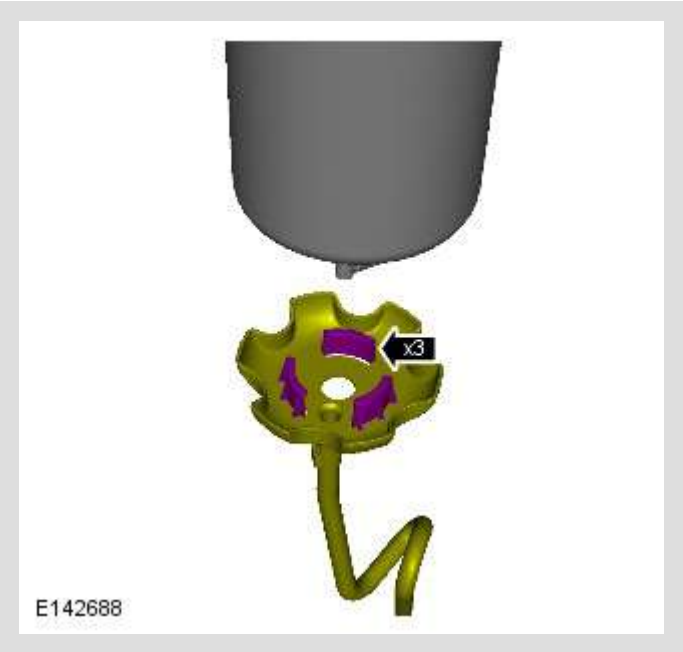

5.

CAUTIONS:

- Before disconnecting or removing components, ensure the area around the joint faces and connections are clean. Plug open connections to prevent contamination.
- Be prepared to collect escaping fuel.

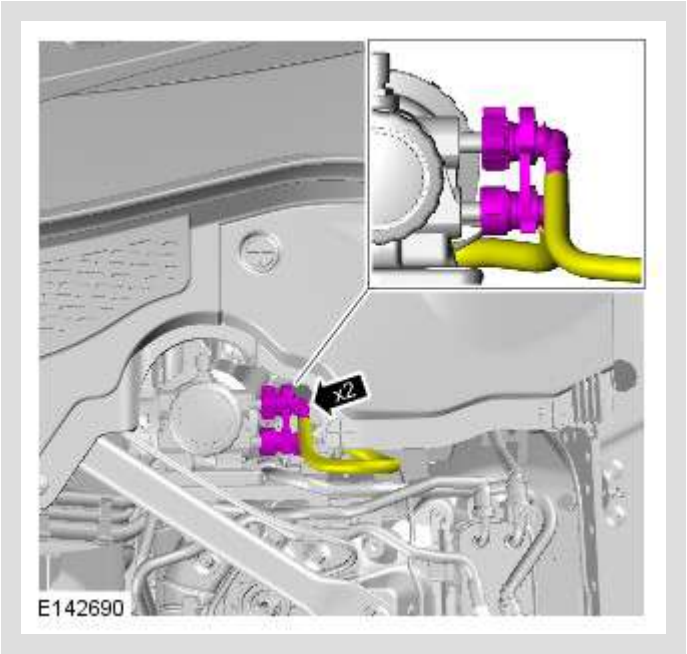

6.

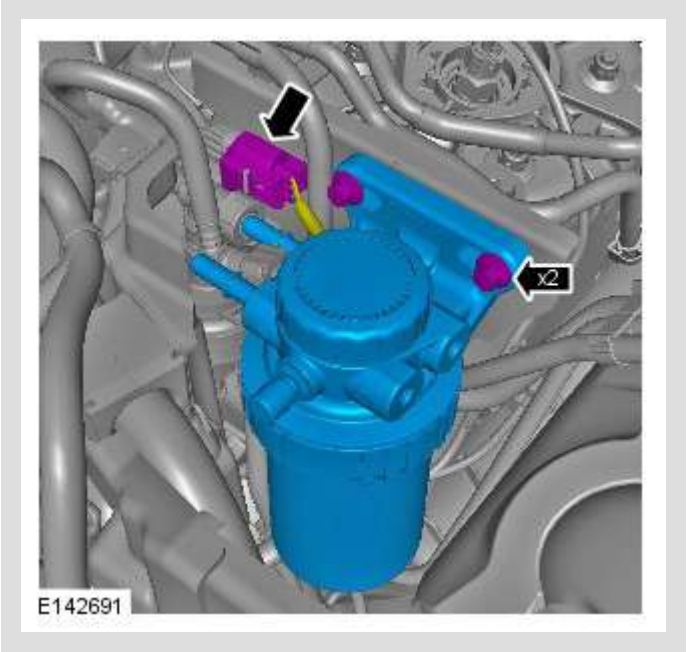

Torque: **25 Nm**

7.

WARNING:

Fluid loss is unavoidable, use absorbent cloth or a container to collect the fluid.

CAUTION:

Note the fitted position of the component prior to removal.

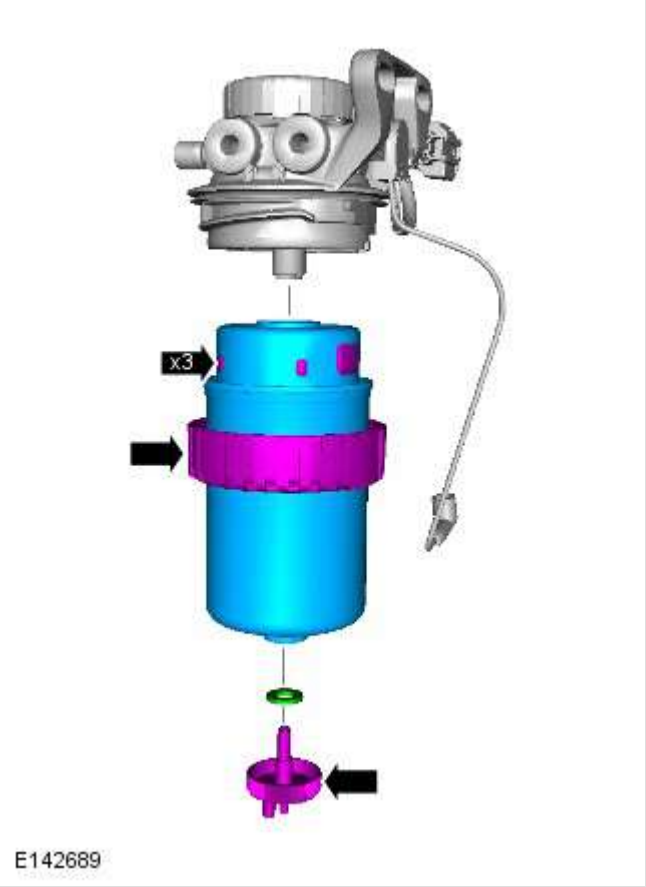

INSTALLATION

1.

CAUTION:

Make sure that the fuel filter is correctly aligned. Failure to follow this instruction may result in damage to the vehicle.

To install, reverse the removal procedure.

2. Refer to: Low-Pressure Fuel System Bleeding (310-00 Fuel System - General Information, General Procedures).

PUBLISHED: 12-SEP-2012
2015.0 RANGE ROVER (LG), 310-01

FUEL TANK AND LINES - TDV8 4.4L DIESEL

FUEL LEVEL SENSOR (G1520340)

REMOVAL AND INSTALLATION

88.25.35	SENDER UNIT - FUEL TANK GAUGE - LH - RENEW	4400 CC, TDV8	1	USED WITHINS	

REMOVAL

WARNINGS:

- After carrying out repairs, the fuel system must be checked visually for leaks. Failure to follow this instruction may result in personal injury.
- This procedure involves fuel handling. Be prepared for fuel spillage at all times and always observe fuel handling precautions. Failure to follow these instructions may result in personal injury.
- The spilling of fuel is unavoidable during this operation. Ensure that all necessary precautions are taken to prevent fire and explosion.
- Do not carry or operate cellular phones when working on or near any fuel related components. Highly flammable vapors are always present and may ignite. Failure to follow these instructions may result in personal injury.
- Do not smoke or carry lighted tobacco or open flame of any type when working on or near any fuel related components. Highly flammable vapors are always present and may ignite. Failure to follow these instructions may result in personal injury.
- If fuel contacts the eyes, flush the eyes with cold water or eyewash solution and seek immediate medical attention.
- Wash hands thoroughly after fuel handling, as prolonged contact may cause irritation. Should irritation develop, seek medical attention.

CAUTION:

Make sure the workshop area in which the vehicle is being worked on is as clean and as dust free as possible. Foreign matter from work on clutches, brakes or

from machining or welding operations can contaminate the fuel system and may result in later malfunction.

NOTE:

Removal steps in this procedure may contain installation details.

1.

WARNING:

Make sure to support the vehicle with axle stands.

Raise and support the vehicle.

2. Refer to: Diesel Fuel System Health and Safety Precautions (100-00 General Information, Description and Operation).

3. Disconnect the battery ground cable.
Refer to: Specifications (414-00 Battery and Charging System - General Information, Specifications).

4. Refer to: Fuel Pump and Sensor Unit (310-01E Fuel Tank and Lines - SDV6 3.0 L Diesel - Hybrid Electric Vehicle, Removal and Installation).

5.

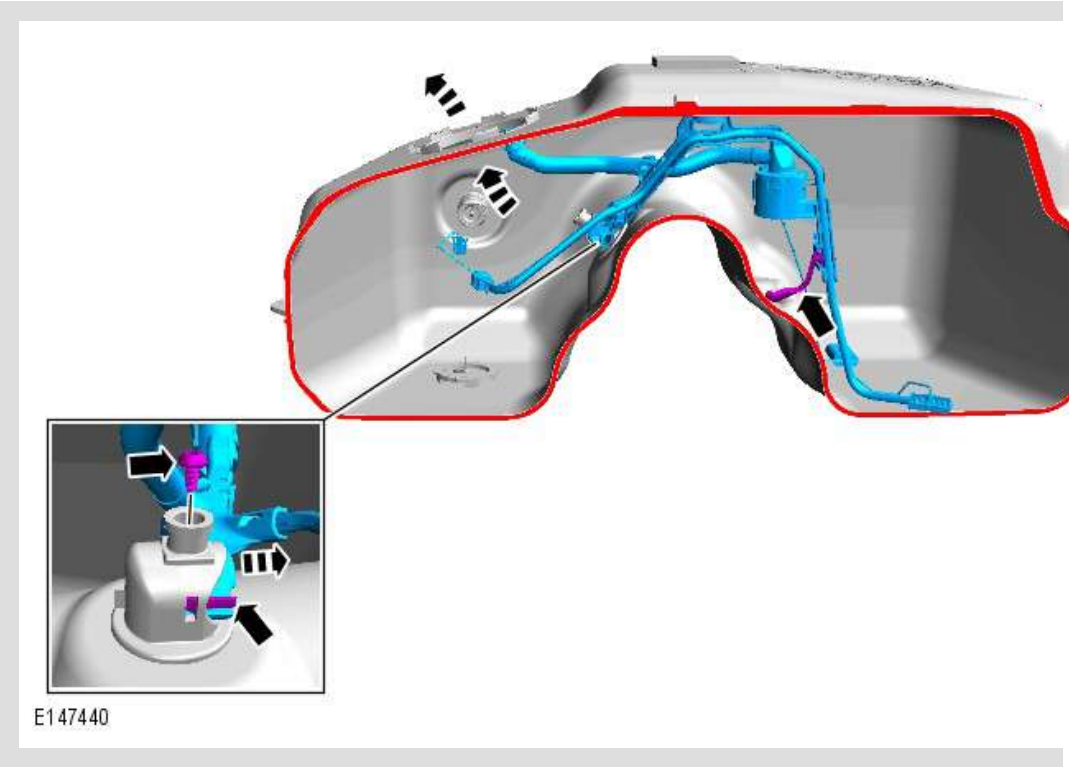

Torque: **7 Nm**

INSTALLATION

1. To install, reverse the removal procedure.

PUBLISHED: 13-SEP-2012
2015.0 RANGE ROVER (LG), 310-01

FUEL TANK AND LINES - TDV8 4.4L DIESEL

FUEL PUMP AND SENSOR UNIT (G1509636)

19.45.03	PUMP - INTEGRAL - FUEL TANK - REAR - RENEW	4400 CC, TDV8	1	USED WITHINS	

REMOVAL

WARNINGS:

- After carrying out repairs, the fuel system must be checked visually for leaks. Failure to follow this instruction may result in personal injury.
- This procedure involves fuel handling. Be prepared for fuel spillage at all times and always observe fuel handling precautions. Failure to follow these instructions may result in personal injury.
- The spilling of fuel is unavoidable during this operation. Ensure that all necessary precautions are taken to prevent fire and explosion.
- Do not carry or operate cellular phones when working on or near any fuel related components. Highly flammable vapors are always present and may ignite. Failure to follow these instructions may result in personal injury.
- Do not smoke or carry lighted tobacco or open flame of any type when working on or near any fuel related components. Highly flammable vapors are always present and may ignite. Failure to follow these instructions may result in personal injury.
- If fuel contacts the eyes, flush the eyes with cold water or eyewash solution and seek immediate medical attention.
- Wash hands thoroughly after fuel handling, as prolonged contact may cause irritation. Should irritation develop, seek medical attention.

CAUTION:

Make sure the workshop area in which the vehicle is being worked on is as clean and as dust free as possible. Foreign matter from work on clutches, brakes or from machining or welding operations can contaminate the fuel system and may result in later malfunction.

NOTE:

Removal steps in this procedure may contain installation details.

1.

WARNING:

Make sure to support the vehicle with axle stands.

Raise and support the vehicle.

2. Refer to: Diesel Fuel System Health and Safety Precautions (100-00 General Information, Description and Operation).

3. Disconnect the battery ground cable.
Refer to: Specifications (414-00 Battery and Charging System - General Information, Specifications).

4. Refer to: Fuel Tank Draining (310-00 Fuel System - General Information, General Procedures).

5.

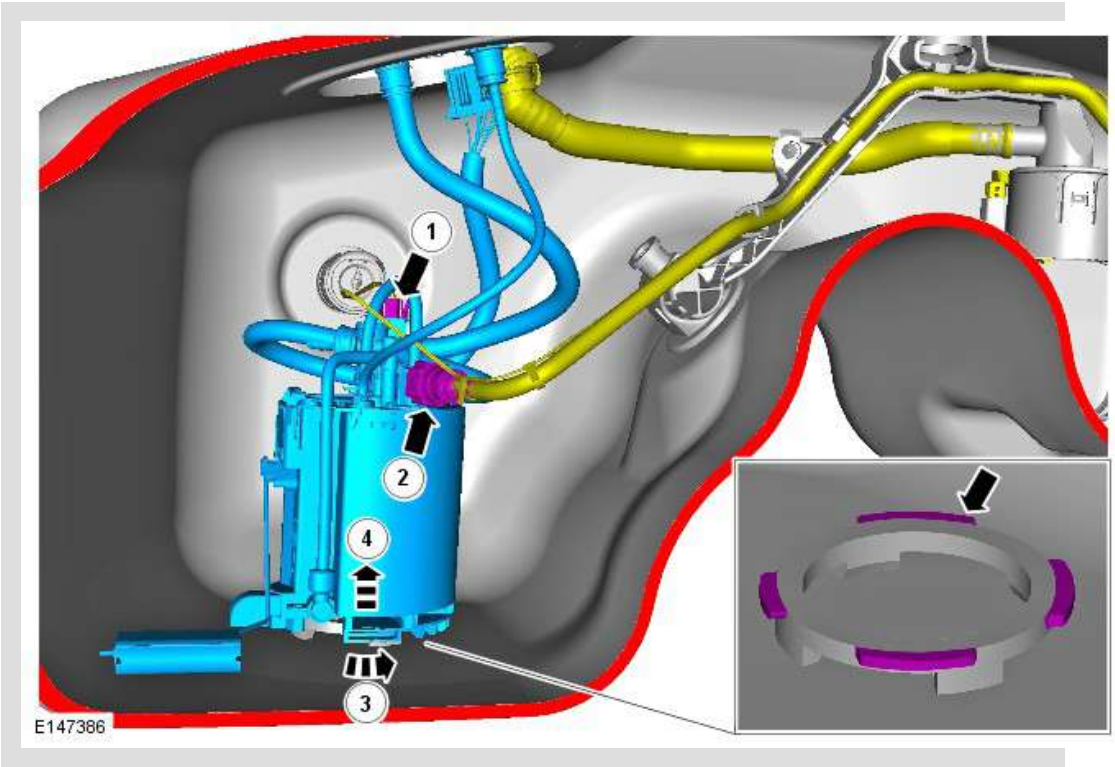

INSTALLATION

1. To install, reverse the removal procedure.

PUBLISHED: 25-JUL-2017
2015.0 RANGE ROVER (LG), 310-01

FUEL TANK AND LINES - TDV8 4.4L DIESEL

FUEL TANK FILLER PIPE (G1509645)

19.55.07	FILLER PIPE - FUEL TANK - RENEW	4400 CC, TDV8, WITH PARTICULATE FILTER	2.9	USED WITHINS

GENERAL EQUIPMENT

EQUIPMENT NAME
Transmission jack

PART(S)

STEP	REPLACE PART / RENEW PART	PART NAME	
Installation Step 2	Renew Part	Rear subframe to body bolts	1
Installation Step 8	Renew Part	Shock absorber nut and bolt	1

REMOVAL

WARNINGS:

- The spilling of fuel is unavoidable during this operation. Ensure that all necessary precautions are taken to prevent fire and explosion.
- Do not carry or operate cellular phones when working on or near any fuel related components. Highly flammable vapors are always present and may ignite. Failure to follow these instructions may result in personal injury.
- Do not smoke or carry ignited tobacco or open flame of any type when working on or near any fuel related components. Highly flammable vapors are always present and may ignite. Failure to follow these instructions may result in personal injury.
- If fuel contacts the eyes, flush the eyes with cold water or eyewash solution and seek immediate medical attention.
- Wash hands thoroughly after fuel handling, as prolonged contact may cause irritation. Should irritation develop, seek medical attention.

NOTE:

Removal steps in this procedure may contain installation details.

1. Refer to: Petrol and Petrol-Ethanol Fuel Systems Health and Safety Precautions (100-00 General Information, Description and Operation).
Refer to: Diesel Fuel System Health and Safety Precautions (100-00 General Information, Description and Operation).

2. Using the Land Rover approved diagnostic system, depressurize the air suspension.
Refer to: Air Suspension System Depressurize and Pressurize (204-05 Vehicle Dynamic Suspension, General Procedures).

3. 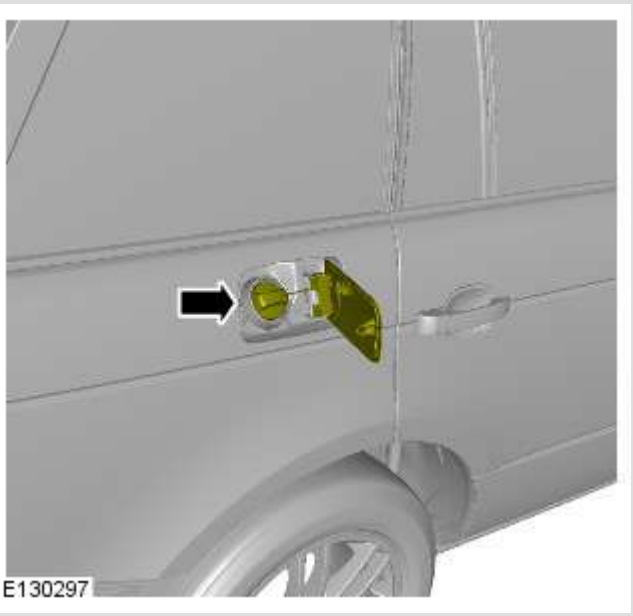

Remove the fuel filler cap.

4.

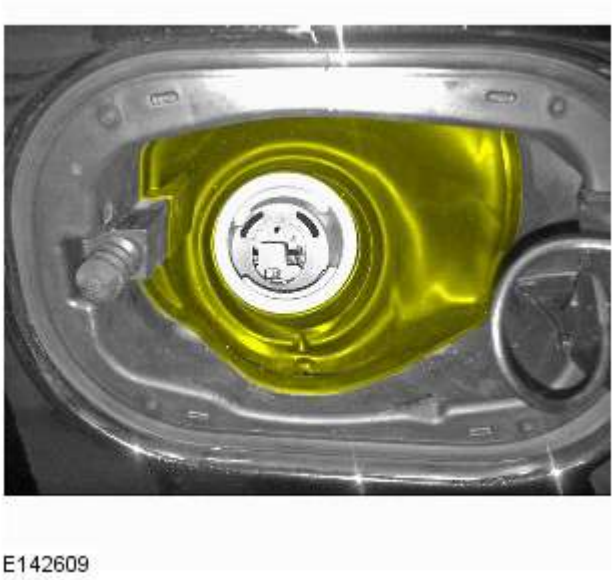

Remove the trim around the fuel filler pipe.

5. Raise and support the vehicle on a suitable 2 post lift.
Refer to: Lifting (100-02 Jacking and Lifting, Description and Operation).

6. Remove the rear road wheels.
Refer to: Wheel and Tire - TDV6 3.0L Diesel - Gen 2/GTDi 2.0L Petrol/TDV6 3.0L Diesel - Gen 1.5/TDV8 4.4L Diesel/V6 S/C 3.0L Petrol /V8 N/A 5.0L Petrol /V8 S/C 5.0L Petrol (204-04 Wheels and Tires, Removal and Installation).

7. Remove the right rear wheel arch liner.
Refer to: Rear Wheel Arch Liner (501-08 Exterior Trim and Ornamentation, Removal and Installation).

8.

- Release the breather hose from the fuel filler pipe.
- Release the evaporative emission cannister hose.

9.

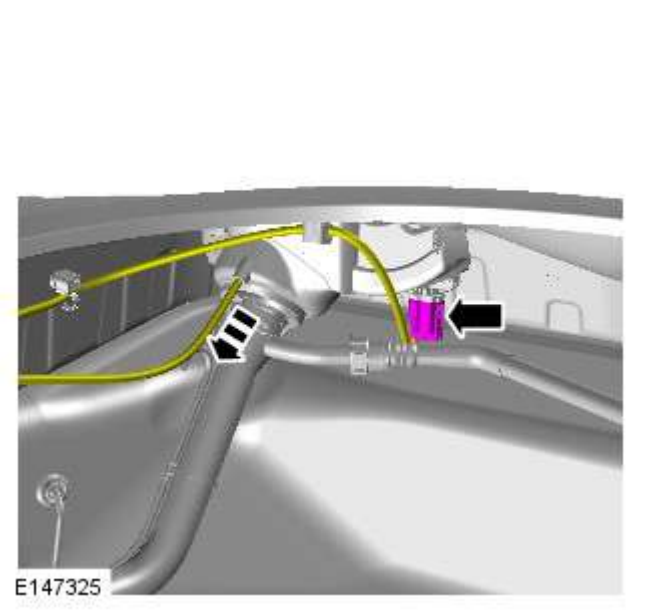

Disconnect the electrical connector.

10.

CAUTION:

Care must be taken not to damage the body paint work.

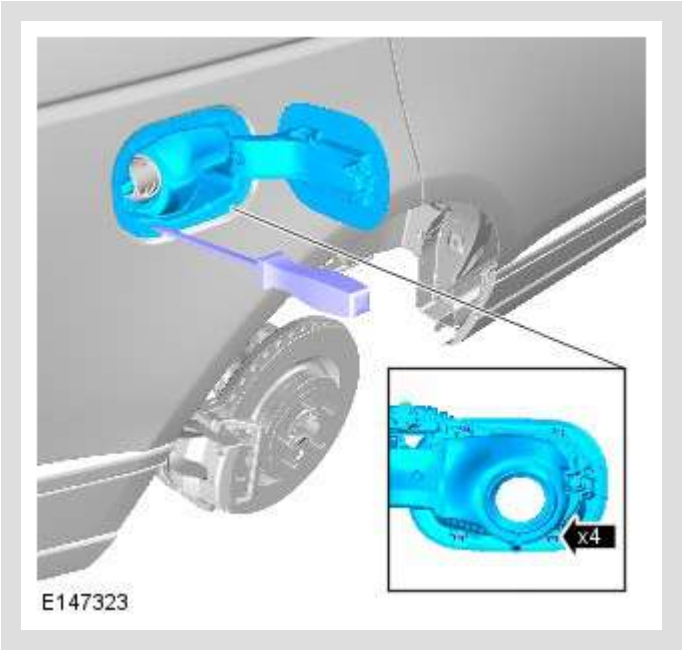

Remove the fuel filler flap assembly.

11.

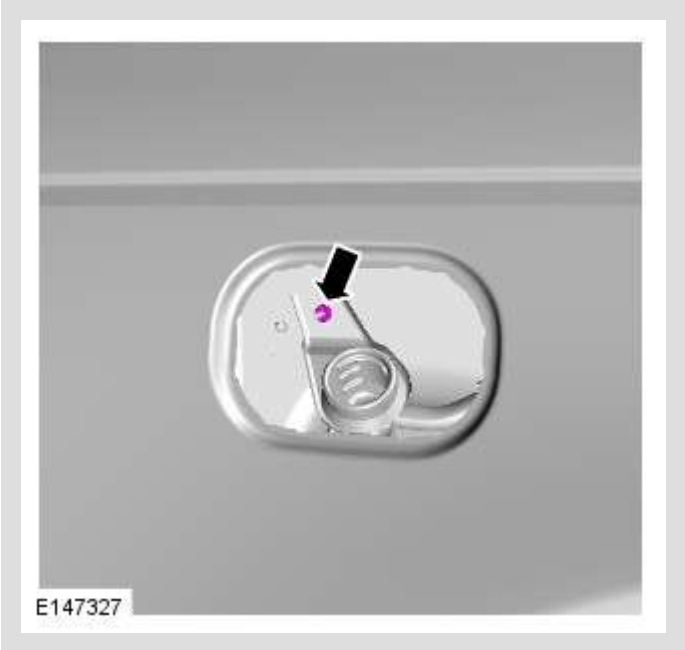

Remove the nut from the fuel filler pipe.

12.

NOTE:

Repeat this step for the other side.

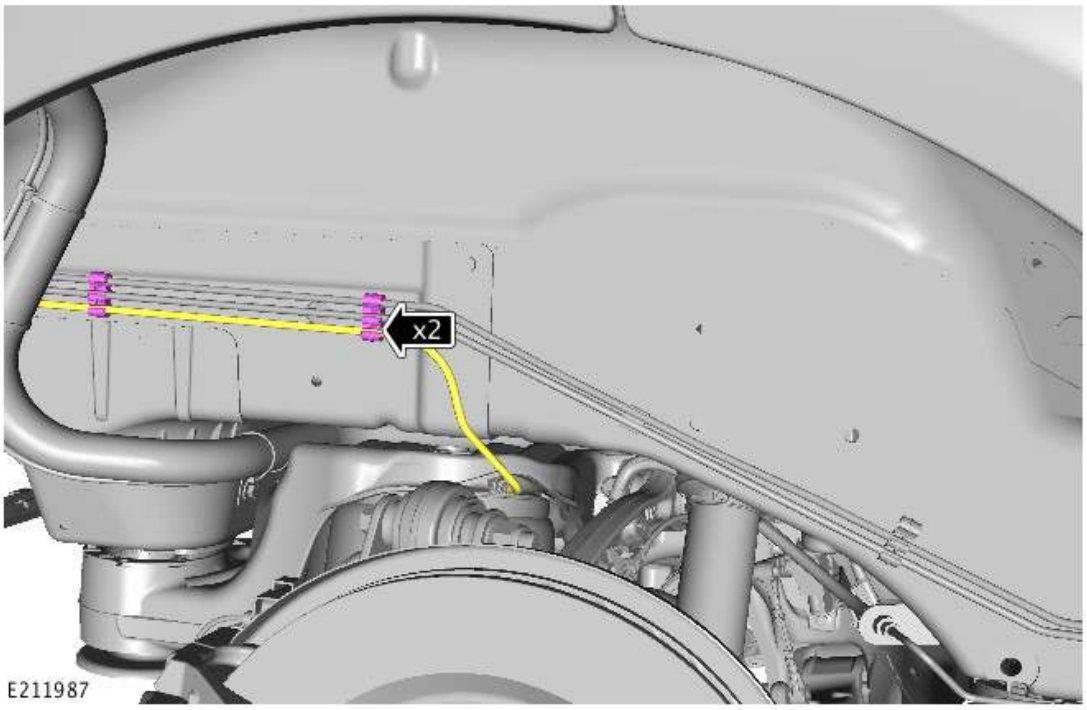

Release the air suspension hoses from the body.

13.

CAUTION:

Make sure to support the lower arm with suitable axle stands.

NOTE:

Repeat this step for the other side.

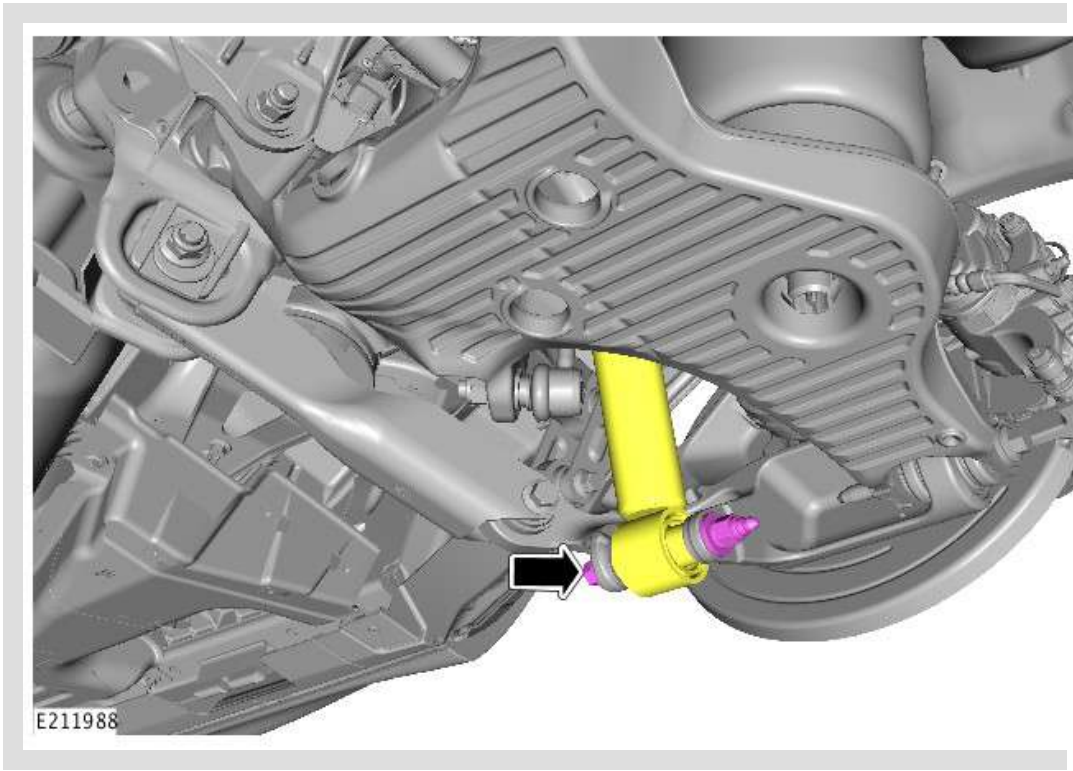

Remove and discard the nut and bolt.

14. Remove the driveshaft.

Refer to: Rear Driveshaft - TDV6 3.0L Diesel - Gen 2/TDV6 3.0L Diesel - Gen 1.5 (205-01 Driveshaft, Removal and Installation).

Refer to: Rear Driveshaft - SDV6 3.0L Diesel - Hybrid Electric Vehicle (205-01 Driveshaft, Removal and Installation).

Refer to: Rear Driveshaft - TDV8 4.4L Diesel (205-01 Driveshaft, Removal and Installation).

Refer to: Rear Driveshaft - V6 S/C 3.0L Petrol /V8 N/A 5.0L Petrol/V8 S/C 5.0 L Petrol (205-01 Driveshaft, Removal and Installation).

Refer to: Rear Driveshaft - GTDi 2.0L Petrol (205-01 Driveshaft, Removal and Installation).

15.

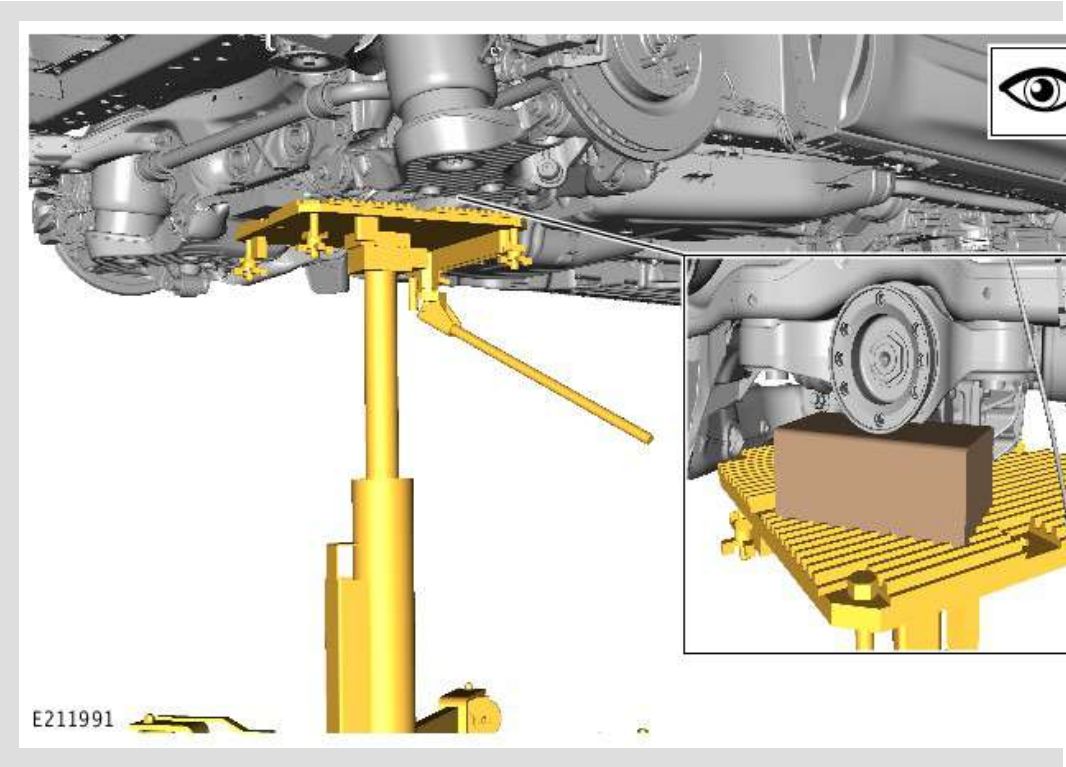

- Position a suitable transmission jack under the rear subframe assembly.
  General Equipment: Transmission jack
- Support the rear differential with a suitable block.

16.

NOTE:

Repeat this step for the other side.

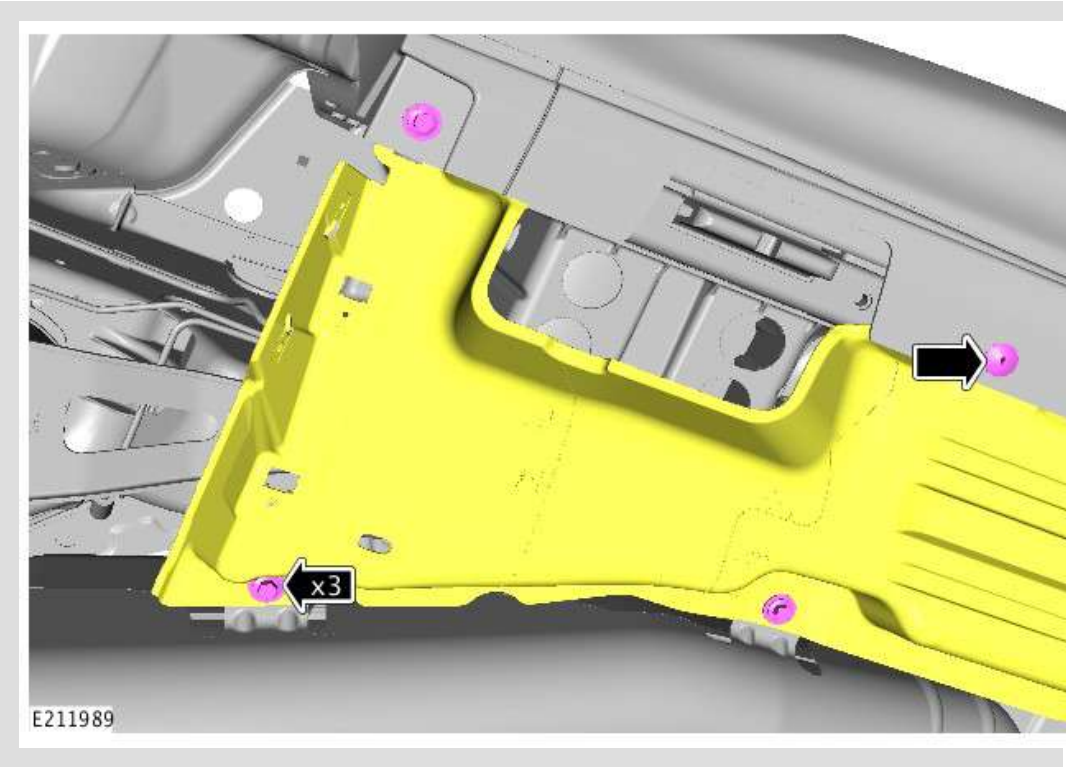

Remove the bolts and the clip .

17.

NOTE:

Repeat this step for the other side.

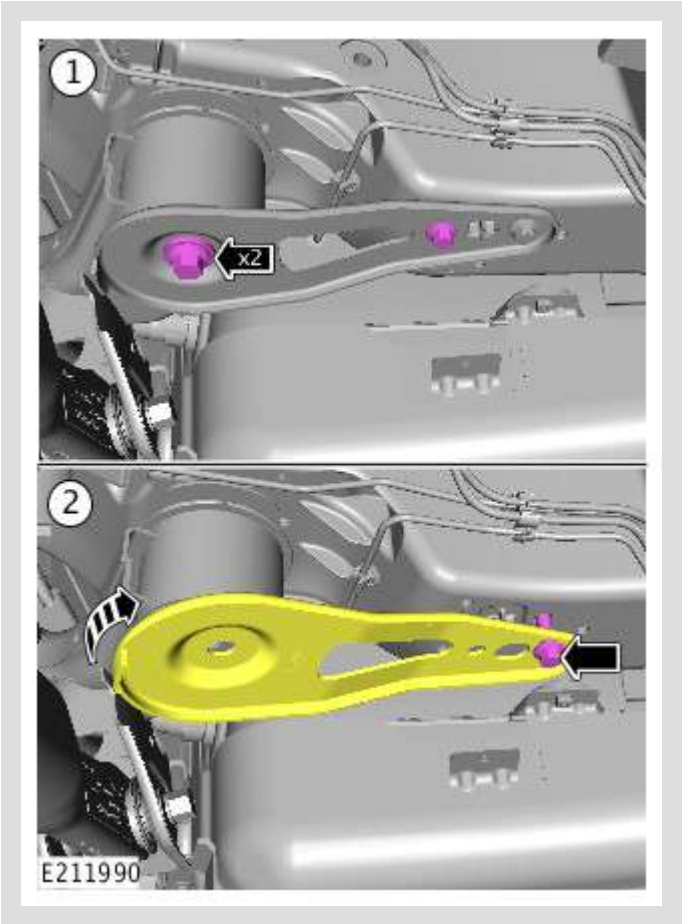

- Remove and discard the rear subframe bolts.
- Remove the support bracket bolts.
- Loosen the remaining support bracket bolt and move clear of the rear subframe.

18.

WARNING:

Make sure the rear subframe assembly is adequately supported.

- Lower the transmission jack **slowly** .
- The rear subframe will lower from the front.

19.

WARNING:

Make sure the rear subframe assembly is adequately supported.

NOTE:

Repeat this step for the other side.

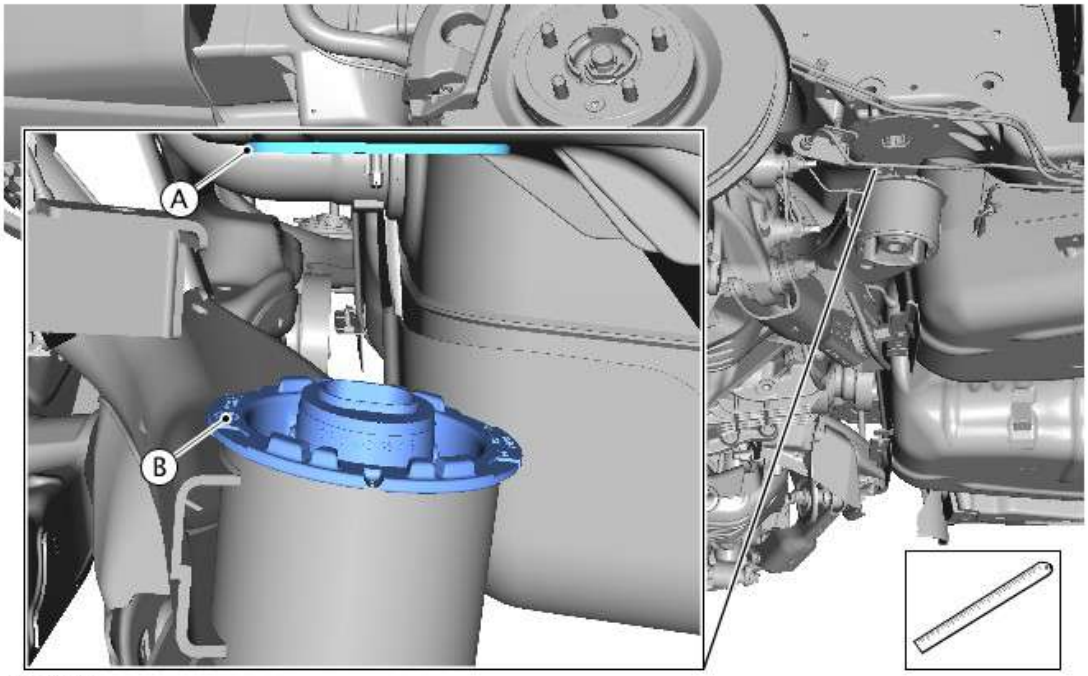

- Measure the distance between **point A** and **point B** . The distance **must not exceed 110mm** .
- If the distance is greater than 110mm **the transmission jack must be raised** .

20.

WARNING:

Make sure the rear subframe assembly is adequately supported.

CAUTION:

The subframe must not come in to contact with the bush cups as highlighted in the illustration.

NOTE:

Repeat this step for the other side.

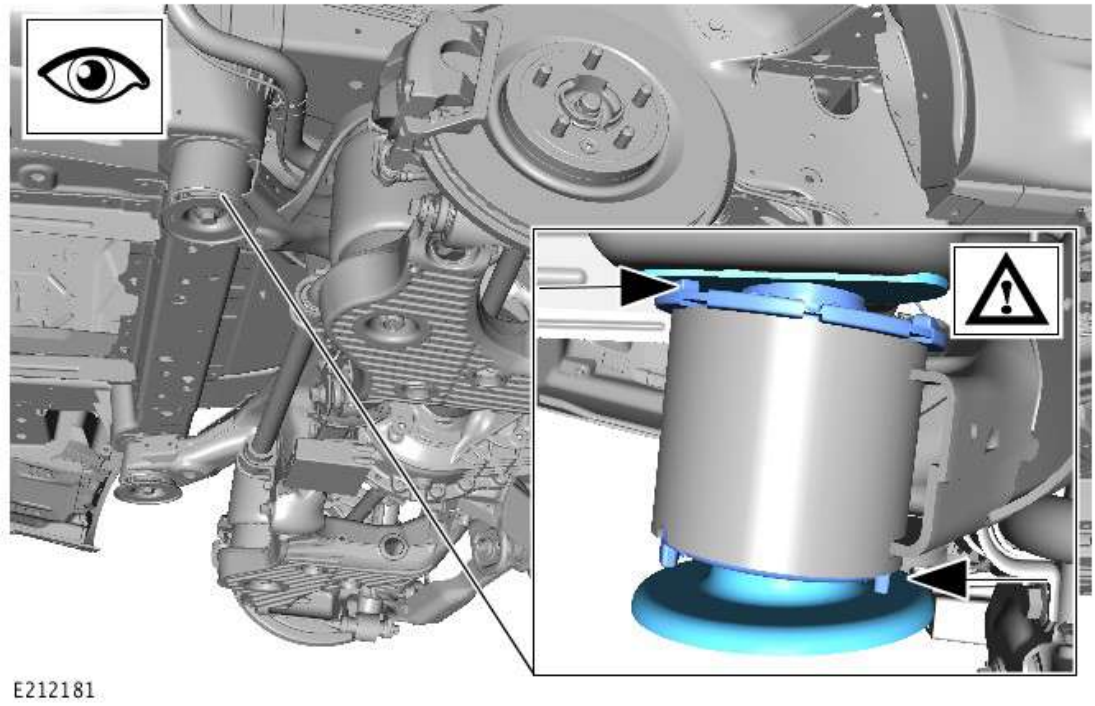

- Check for contact of the rear subframe and the rear subframe bush cups.
- If contact has occurred **the transmission jack must be raised** .

21.

WARNINGS:

- Make sure the rear subframe assembly is adequately supported.
- Be prepared to collect escaping fuel.

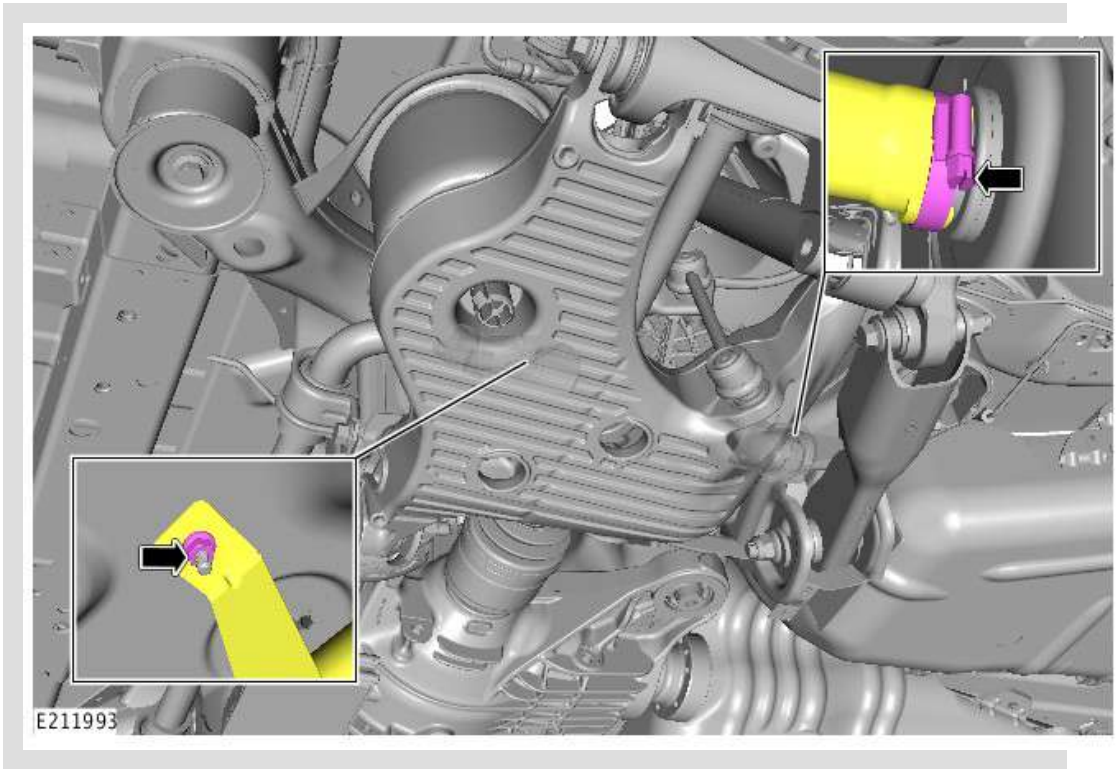

- Remove the nut.
- Remove the clip and release the fuel filler pipe from the fuel tank.

22.

WARNING:

Make sure the rear subframe assembly is adequately supported.

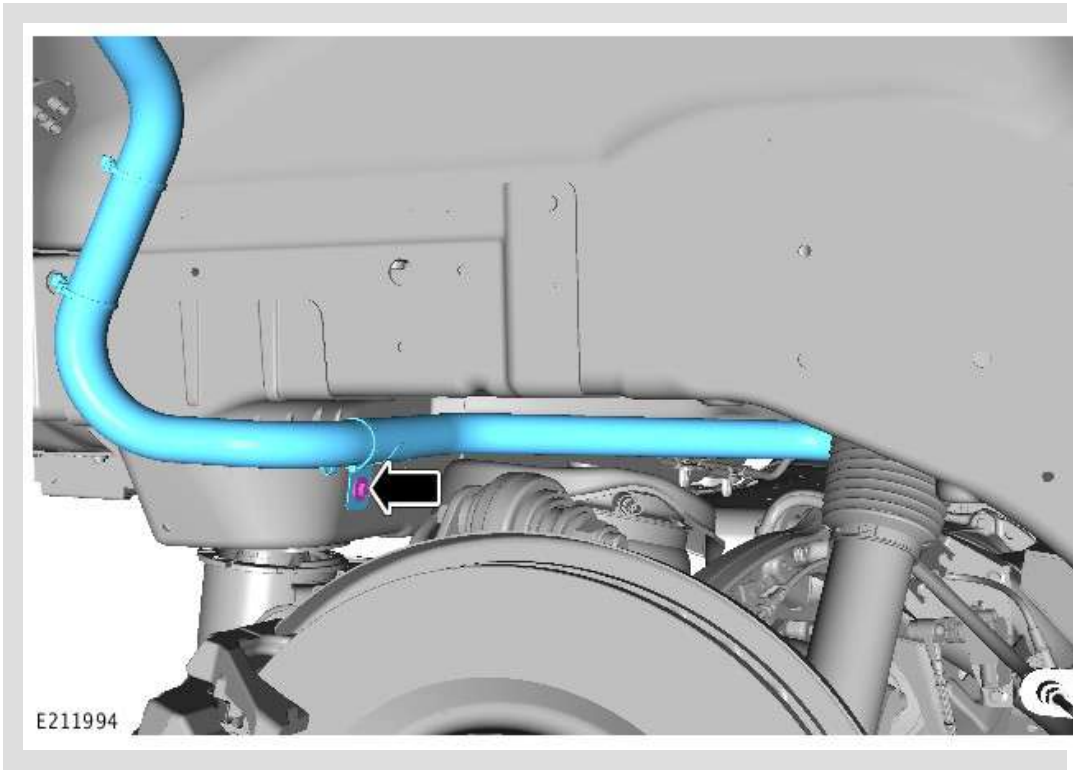

Remove the bolt.

23.

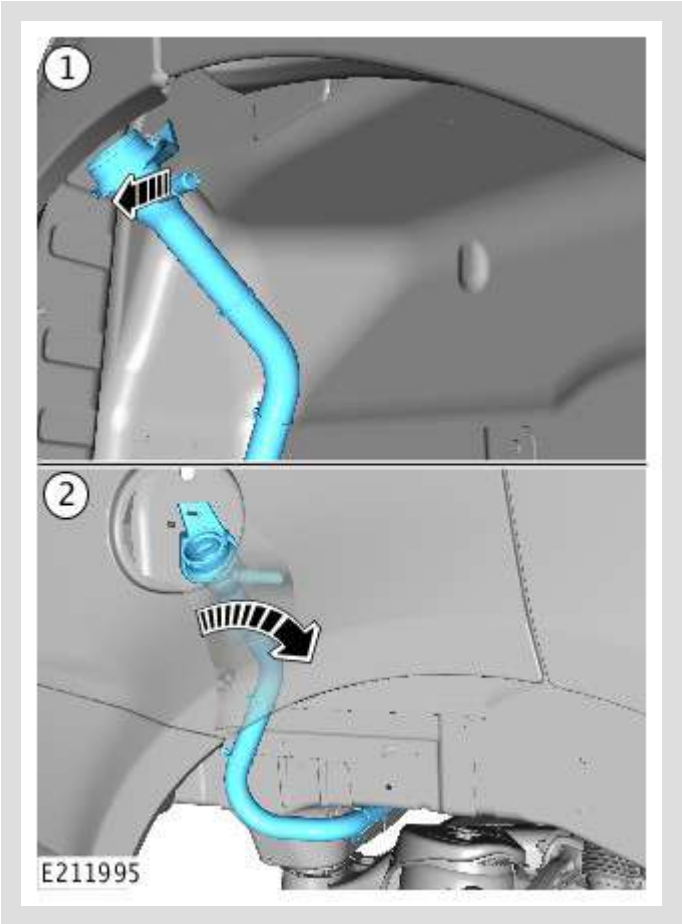

Release the fuel filler pipe from the stud and rotate as highlighted in the illustration.

24.

CAUTION:

Care must be taken not to damage the body paint work.

Remove the fuel filler pipe from the vehicle.

INSTALLATION

1.

CAUTION:

Care must be taken not to damage the body work.

- Install the fuel filler pipe.
- Tighten the nut and bolt.
  Torque: **10 Nm**

2. Install new front subframe bolts finger tight.
Renew Part: *Rear subframe to body bolts : 1* .

3.

NOTE:

Repeat this step for the other side.

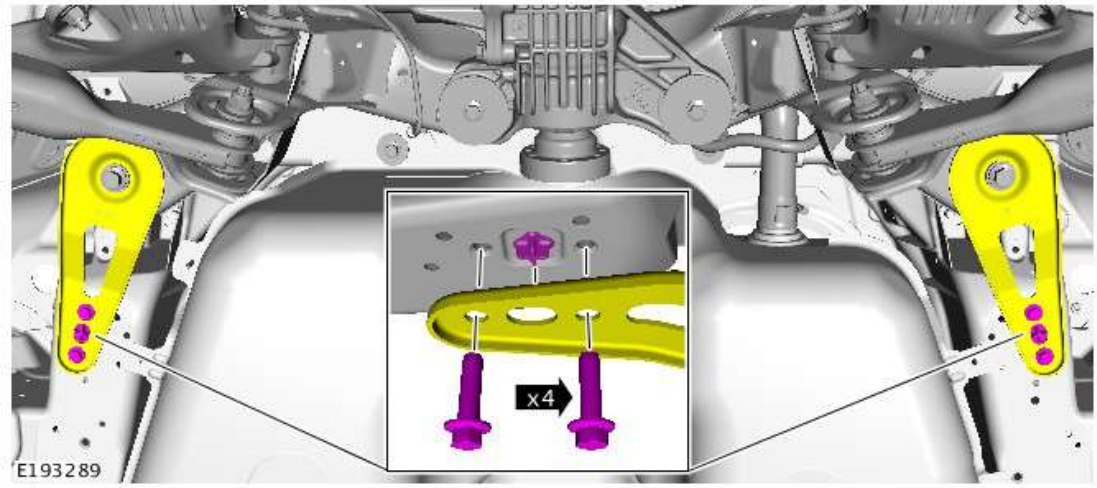

Install the front subframe support bracket bolts.

Torque: **60 Nm**

4. Fully tighten the rear subframe bolts.

Torque: **170 Nm**

5. Remove the transmission jack.

6. **NOTE:**

Repeat this step for the other side.

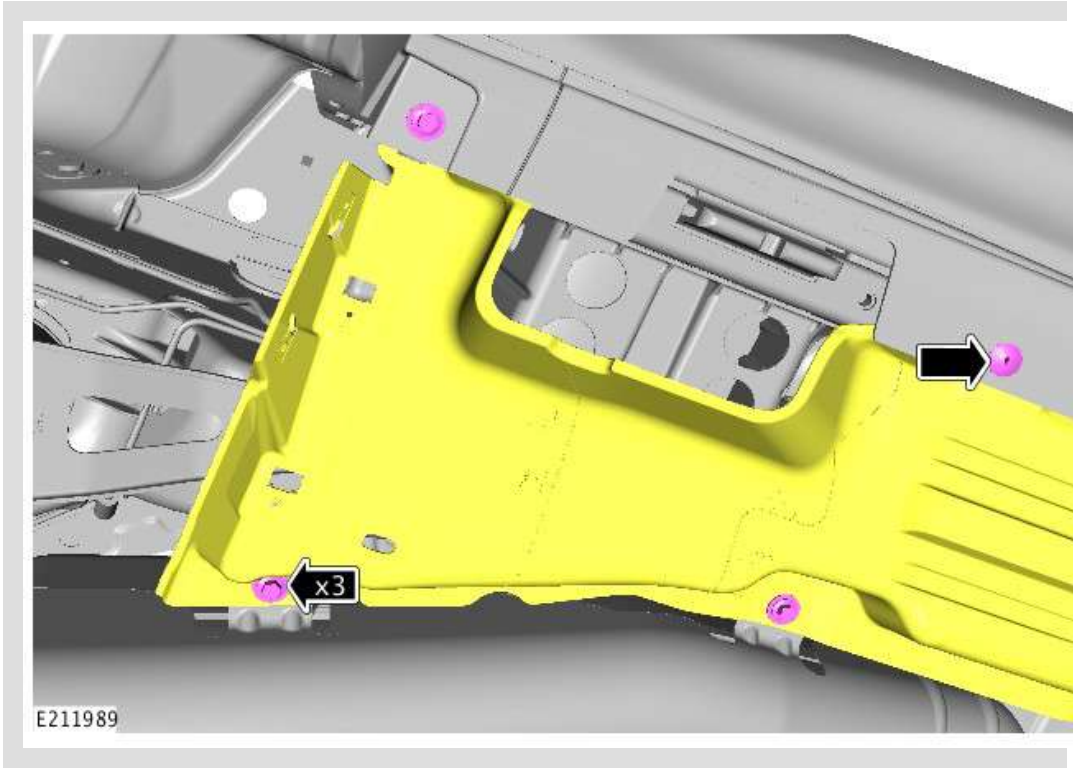

Install the bolts and clip .

7. Install the driveshaft.

Refer to: Rear Driveshaft - TDV6 3.0L Diesel - Gen 2/TDV6 3.0L Diesel - Gen 1.5 (205-01 Driveshaft, Removal and Installation).

Refer to: Rear Driveshaft - SDV6 3.0L Diesel - Hybrid Electric Vehicle (205-01 Driveshaft, Removal and Installation).

Refer to: Rear Driveshaft - TDV8 4.4L Diesel (205-01 Driveshaft, Removal and Installation).

Refer to: Rear Driveshaft - V6 S/C 3.0L Petrol /V8 N/A 5.0L Petrol/V8 S/C 5.0 L Petrol (205-01 Driveshaft, Removal and Installation).

Refer to: Rear Driveshaft - GTDi 2.0L Petrol (205-01 Driveshaft, Removal and Installation).

8. **CAUTION:**

Nuts and bolts must be tightened with vehicle at normal ride height.

NOTE:

Repeat this step for the other side.

- Support the lower arms with suitable axle stands.
- Install a new nut and bolt to the shock absorber.
  Renew Part: Shock absorber nut and bolt : 1 .
  Torque:
  Stage 1: **100 Nm**
  Stage 2: **240°**

9.

NOTE:

Repeat this step for the other side.

Install the air suspension hoses to the body.

10.

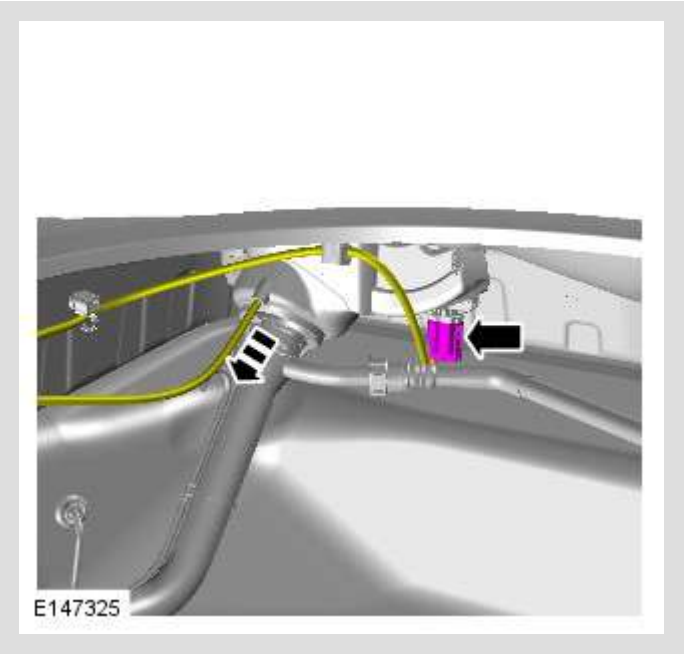

Connect the electrical connector.

11.

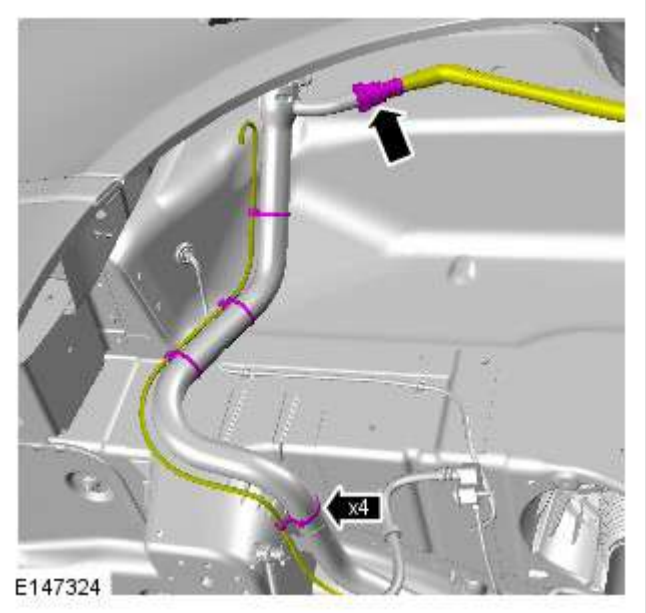

- Install the breather hose on to the fuel filler pipe.
- Install the evaporative emission cannister hose.

12. Install the right rear wheel arch liners.
Refer to: Rear Wheel Arch Liner (501-08 Exterior Trim and Ornamentation, Removal and Installation).

13. Install the rear road wheels.
Refer to: Wheel and Tire - TDV6 3.0L Diesel - Gen 2/GTDi 2.0L Petrol/TDV6 3.0L Diesel - Gen 1.5/TDV8 4.4L Diesel/V6 S/C 3.0L Petrol /V8 N/A 5.0L Petrol /V8 S/C 5.0L Petrol (204-04 Wheels and Tires, Removal and Installation).

14.

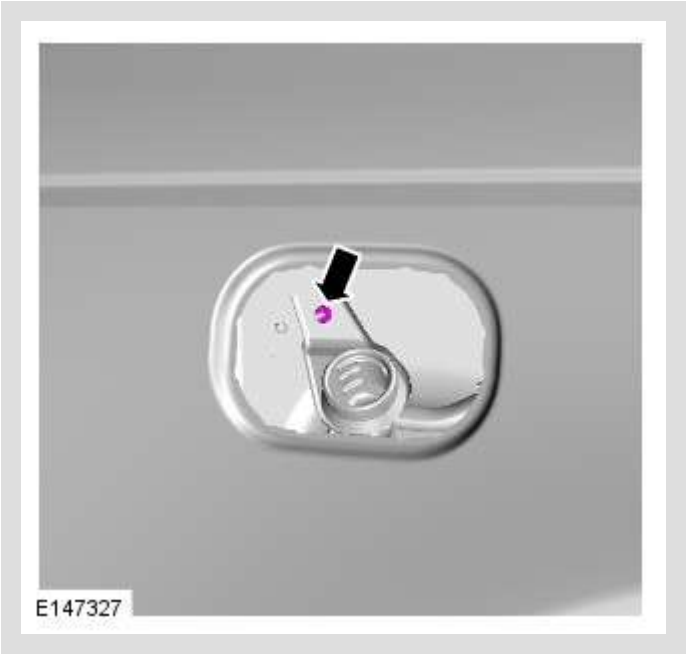

Instal the nut on to the fuel filler pipe.

15.

- Install the fuel filler flap assembly.
- Install the trim around the fuel filler pipe.
- Install the fuel filler cap.

16. Using the Land Rover approved diagnostic system, pressurize the air suspension.
Refer to: Air Suspension System Depressurize and Pressurize (204-05 Vehicle Dynamic Suspension, General Procedures).

PUBLISHED: 05-DEC-2013
2015.0 RANGE ROVER (LG), 310-01

FUEL TANK AND LINES - TDV8 4.4L DIESEL

FUEL TANK (G1676174)

19.55.01	TANK - RENEW	4400 CC, TDV8, WITH PARTICULATE FILTER	3.6	USED WITHINS

REMOVAL

WARNINGS:

- After carrying out repairs, the fuel system must be checked visually for leaks. Failure to follow this instruction may result in personal injury.
- This procedure involves fuel handling. Be prepared for fuel spillage at all times and always observe fuel handling precautions. Failure to follow these instructions may result in personal injury.
- The spilling of fuel is unavoidable during this operation. Ensure that all necessary precautions are taken to prevent fire and explosion.
- Do not carry or operate cellular phones when working on or near any fuel related components. Highly flammable vapors are always present and may ignite. Failure to follow these instructions may result in personal injury.
- Do not smoke or carry lighted tobacco or open flame of any type when working on or near any fuel related components. Highly flammable vapors are always present and may ignite. Failure to follow these instructions may result in personal injury.
- If fuel contacts the eyes, flush the eyes with cold water or eyewash solution and seek immediate medical attention.
- Wash hands thoroughly after fuel handling, as prolonged contact may cause irritation. Should irritation develop, seek medical attention.

CAUTION:

Make sure the workshop area in which the vehicle is being worked on is as clean and as dust free as possible. Foreign matter from work on clutches, brakes or from machining or welding operations can contaminate the fuel system and may result in later malfunction.

NOTE:

Removal steps in this procedure may contain installation details.

All vehicles

1. **WARNING:**

   Make sure to support the vehicle with axle stands.

   Raise and support the vehicle.

2. Refer to: Diesel Fuel System Health and Safety Precautions (100-00 General Information, Description and Operation).

3. Disconnect the battery ground cable.
   Refer to: Specifications (414-00 Battery and Charging System - General Information, Specifications).

4. Refer to: Fuel Tank Draining (310-00 Fuel System - General Information, General Procedures).

5. **NOTE:**

   Repeat the procedure for the other side.

   Refer to: Rear Door Lower Moulding - Short Wheelbase (501-08 Exterior Trim and Ornamentation, Removal and Installation).
   Refer to: Rear Rocker Panel Moulding - Long Wheelbase (501-08 Exterior Trim and Ornamentation, Removal and Installation).

6. Refer to: Rear Driveshaft - TDV6 3.0L Diesel - Gen 2/TDV6 3.0L Diesel - Gen 1.5 (205-01 Driveshaft, Removal and Installation).
   Refer to: Rear Driveshaft - SDV6 3.0L Diesel - Hybrid Electric Vehicle (205-01 Driveshaft, Removal and Installation).

Refer to: Rear Driveshaft - TDV8 4.4L Diesel (205-01 Driveshaft, Removal and Installation).

	Short wheelbase

1.

CAUTION:

LH illustration shown, RH is similar.

NOTE:

Repeat the procedure for the other side.

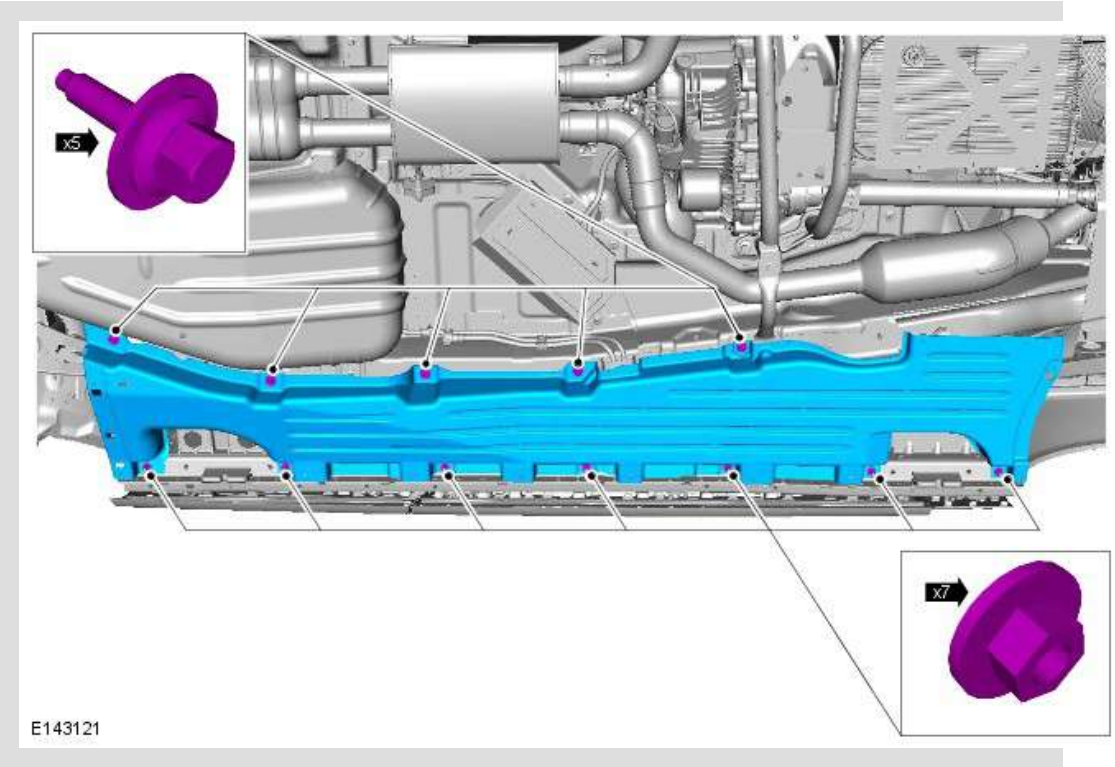

Long wheelbase

1.

CAUTION:

RH illustration shown, LH is similar.

NOTE:

Repeat the procedure for the other side.

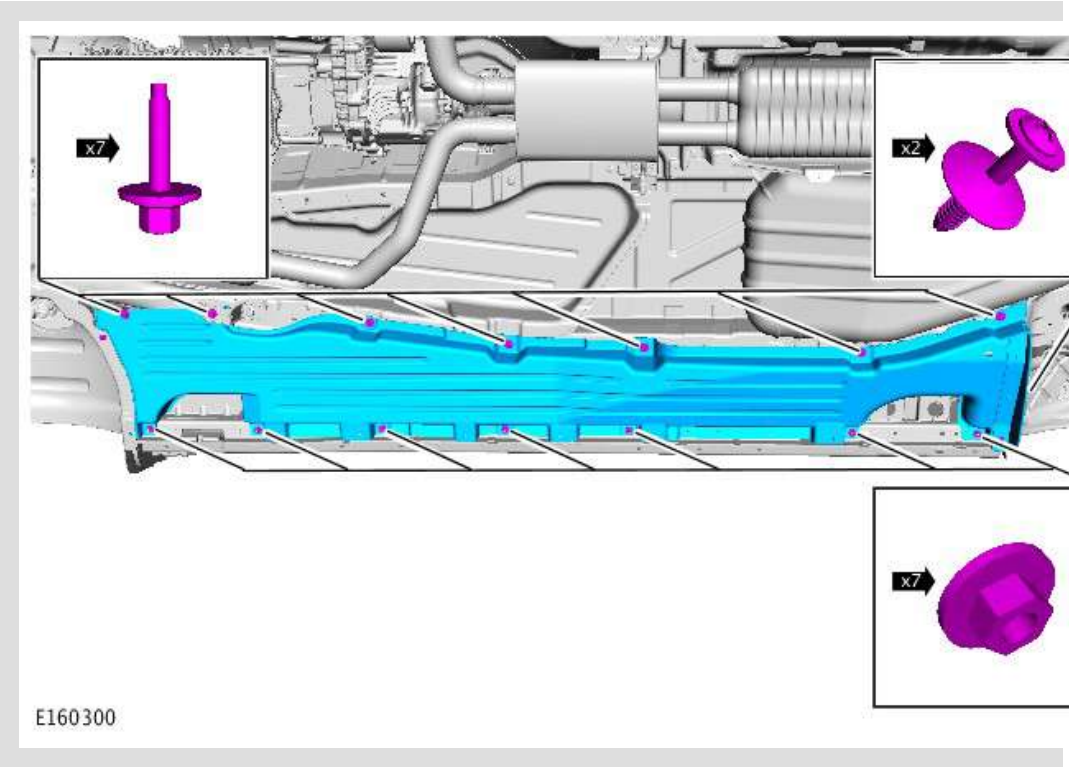

All vehicles

1.

CAUTION:

Be prepared to collect escaping fuel.

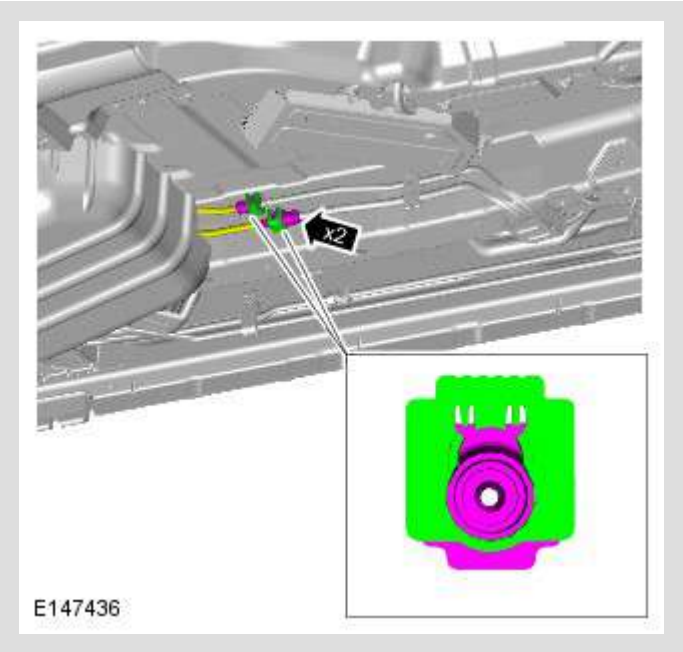

2.

NOTE:

Some variation in the illustrations may occur, but the essential information is always correct.

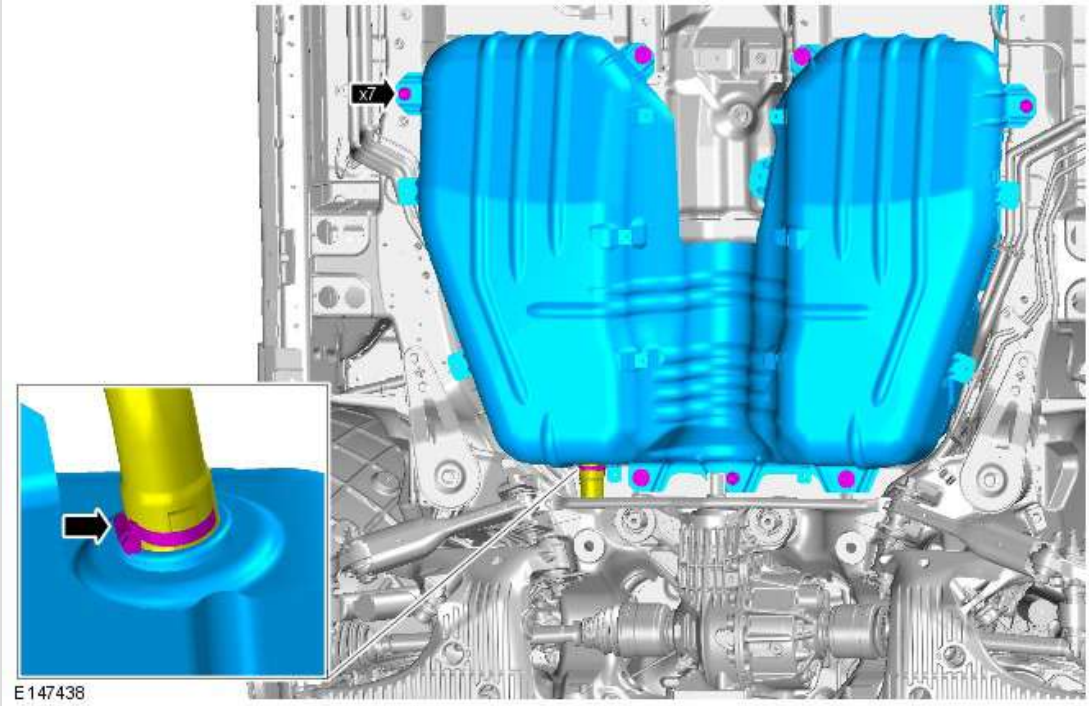

Torque: **45 Nm**

3.

NOTE:

Do not disassemble further if the component is removed for access only.

4.

Torque: **10 Nm**

5.

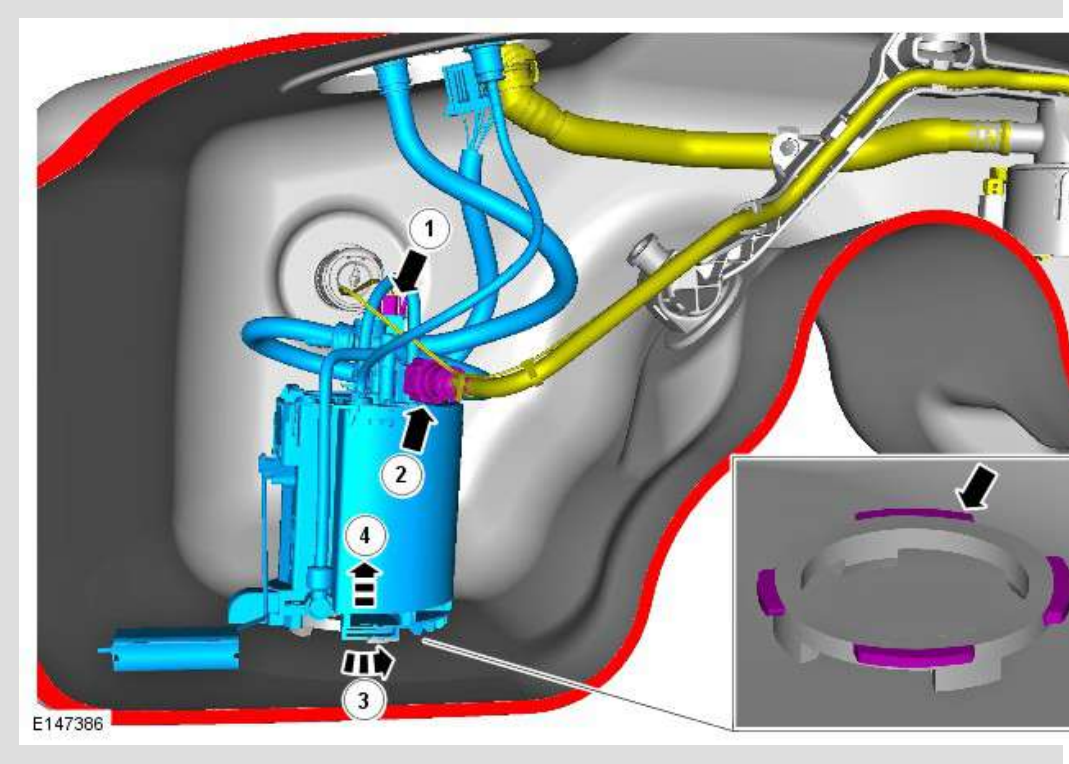

6.

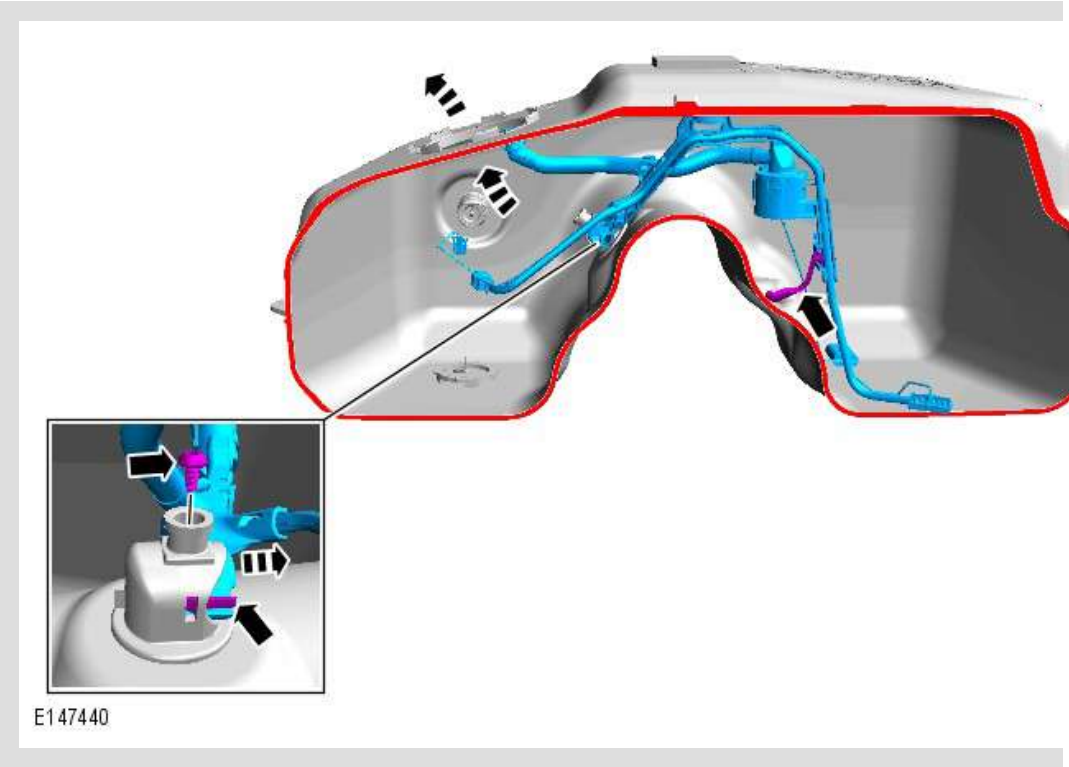

Torque: **7 Nm**

INSTALLATION

1. To install, reverse the removal procedure.

PUBLISHED: 15-DEC-2016
2015.0 RANGE ROVER (LG), 310-01

FUEL TANK AND LINES - TDV8 4.4L DIESEL

AUXILIARY FUEL PUMP (G2047174)

REMOVAL

WARNING:

Be prepared to collect escaping fuel.

CAUTION:

Before disconnecting or removing the components, make sure the area around the joint faces and connections are clean and dry. Plug open connections to prevent contamination.

NOTE:

This procedure contains illustrations showing certain components removed to provide extra clarity.

1. Disconnect the battery ground cable.
   Refer to: Specifications (414-00 Battery and Charging System - General Information, Specifications).

2. Raise and support the vehicle.

3. Remove the front left wheel.
   Refer to: Wheel and Tire - TDV6 3.0L Diesel - Gen 2/GTDi 2.0L Petrol/TDV6 3.0L Diesel - Gen 1.5/TDV8 4.4L Diesel/V6 S/C 3.0L Petrol /V8 N/A 5.0L Petrol /V8 S/C 5.0L Petrol (204-04 Wheels and Tires, Removal and Installation).

4.

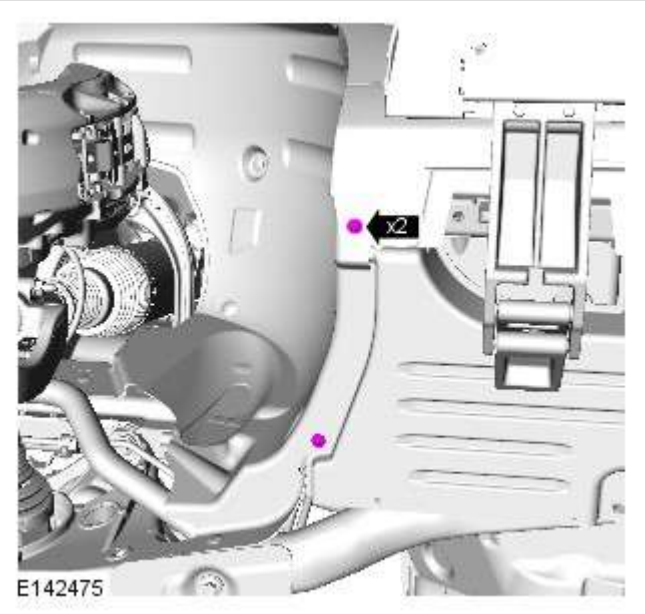

Remove the screws.

5.

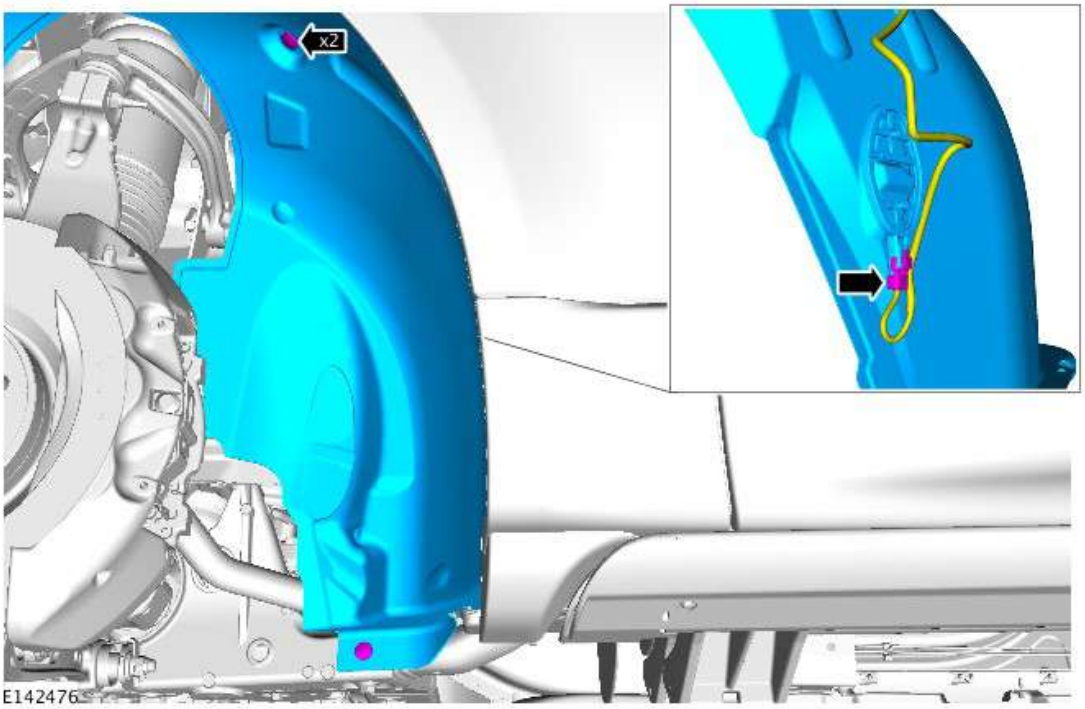

- Remove the clips.
- Disconnect the tire pressure monitoring system front antenna electrical connector.
- Remove the front left fender splash shield.

6.

WARNING:

Be prepared to collect escaping fuel.

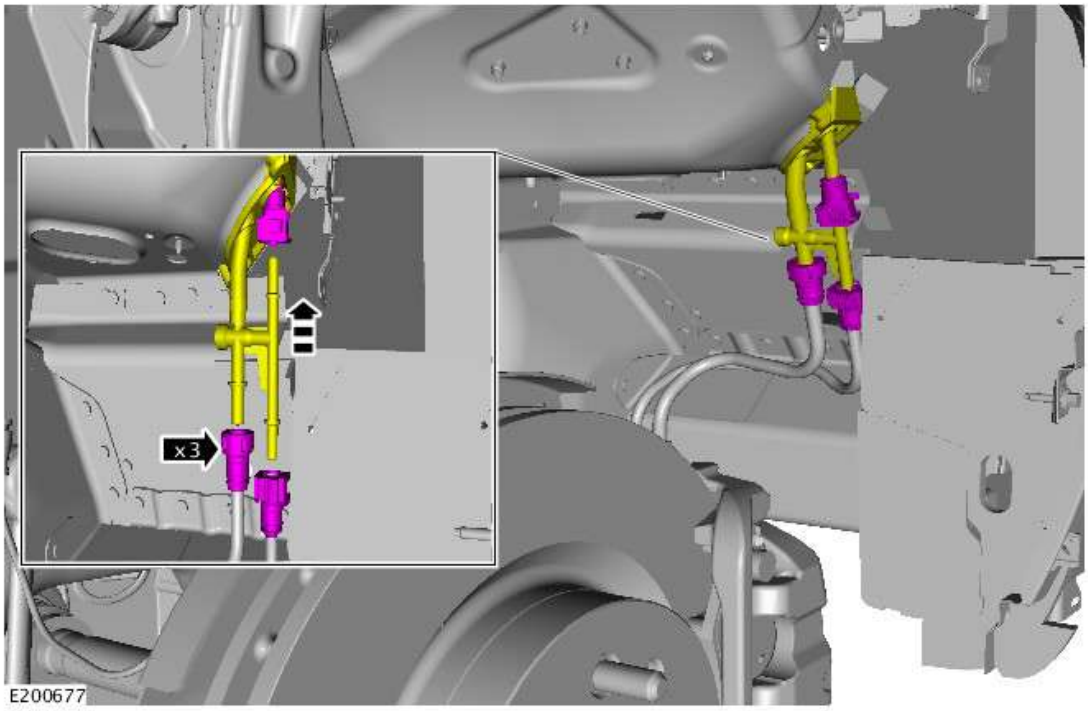

- Disconnect the fuel pipe from the clips.
- Push the pipe upwards.

7. Lower the vehicle.

8. Remove the Electronic Control Module (ECM).
Refer to: Engine Control Module (303-14E Electronic Engine Controls - TDV8 4.4L Diesel, Removal and Installation).

9. Remove the secondary bulkhead left panel.
Refer to: Secondary Bulkhead Left Panel (501-02 Front End Body Panels, Removal and Installation).

10.

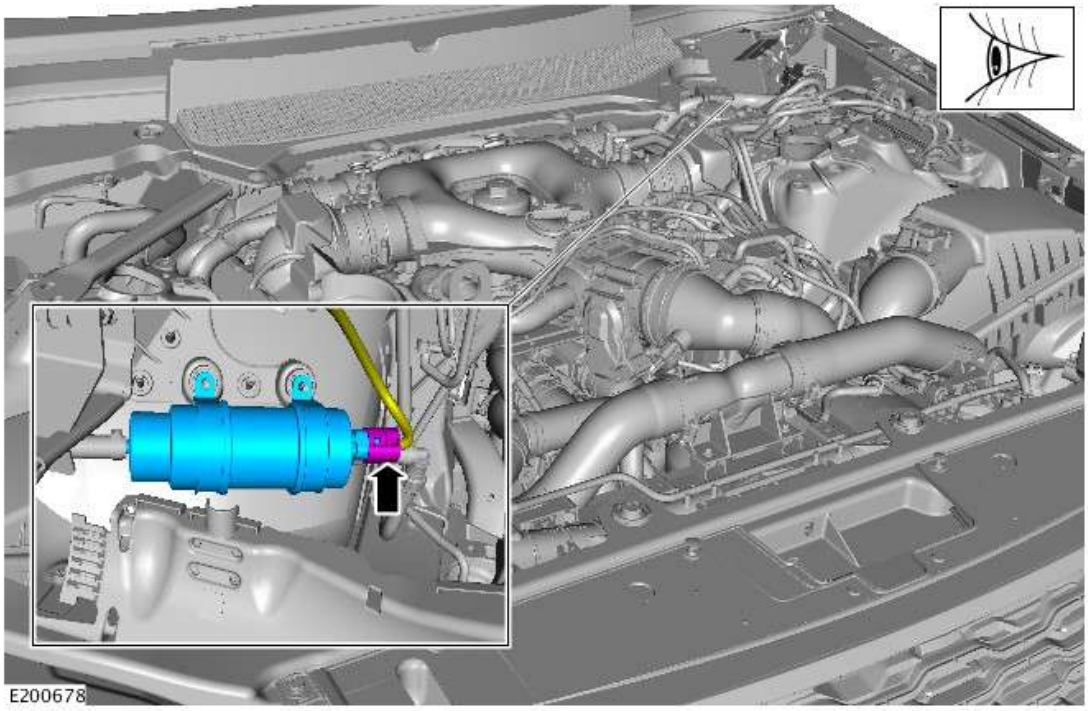

Disconnect the auxiliary fuel pump electrical connector.

11.

WARNING:

Be prepared to collect escaping fuel.

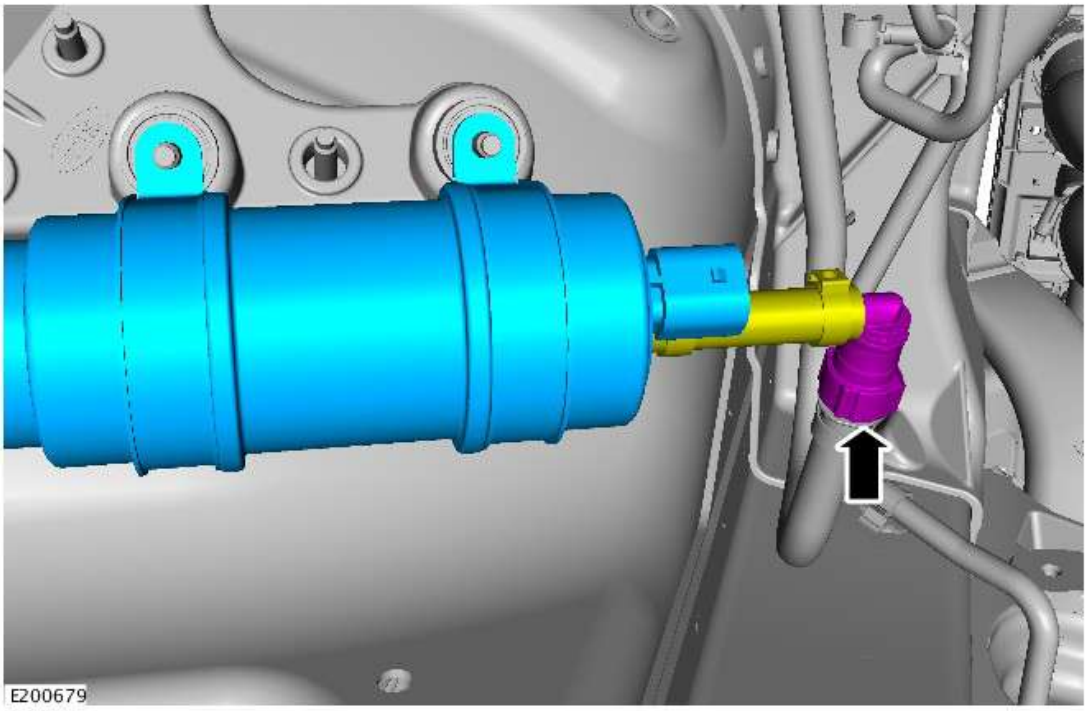

Disconnect the fuel pipe from the clip.

12.

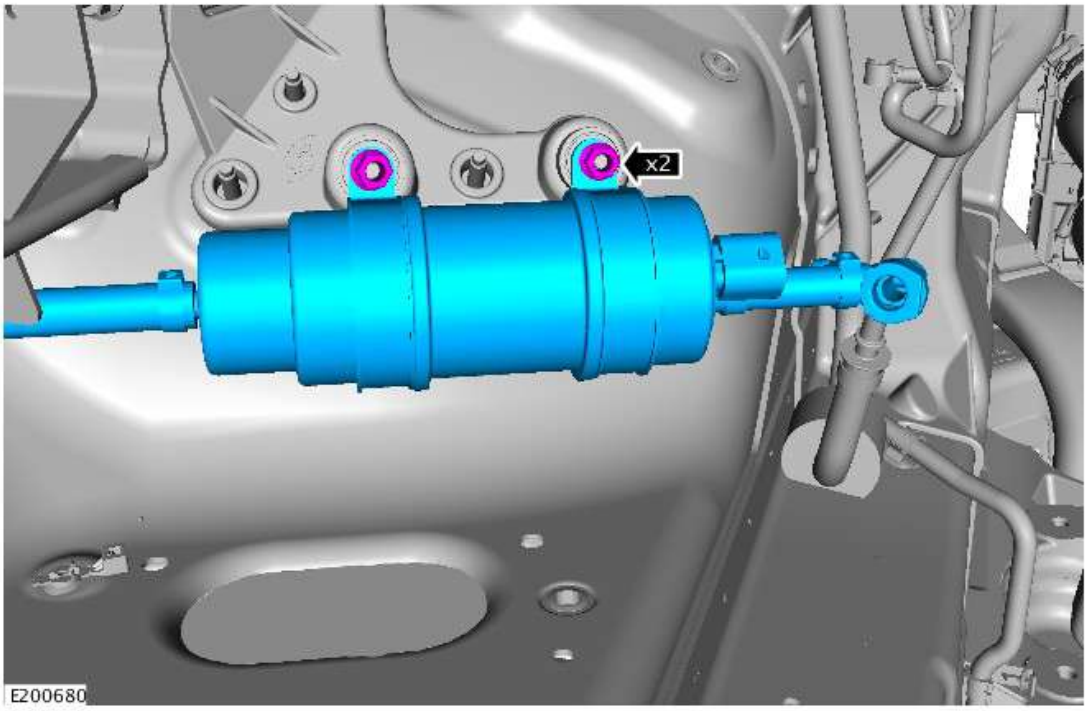

Remove the auxiliary fuel pump nuts.

13.

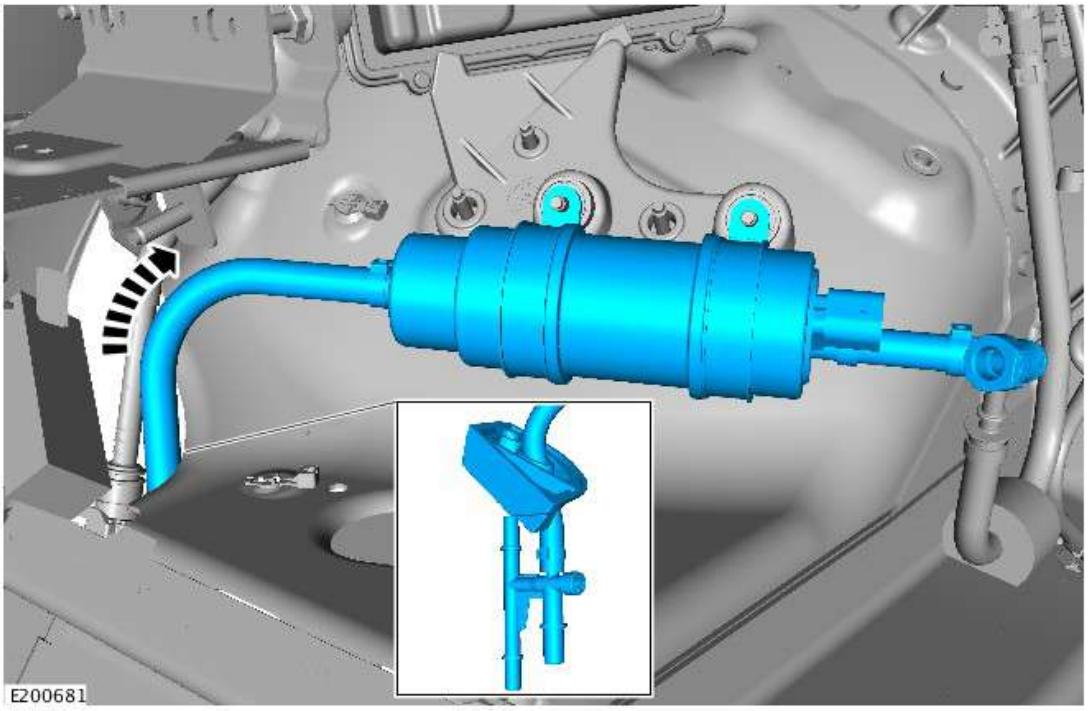

Remove the auxiliary fuel pump.

INSTALLATION

1.

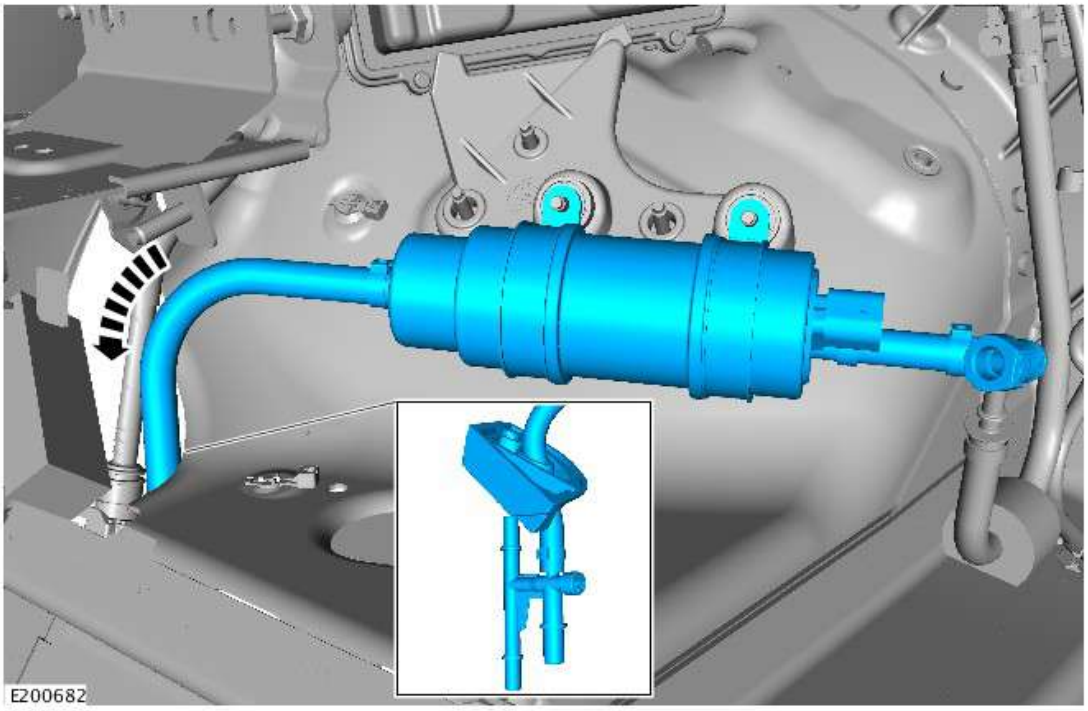

Install the auxiliary fuel pump.

2.

- Install the auxiliary fuel pump nuts.
- *Torque:* **10 Nm**

3. Reconnect the fuel pipe clip.

4. Install the secondary bulkhead panel.
Refer to: Secondary Bulkhead Left Panel (501-02 Front End Body Panels, Removal and Installation).

5. Install the ECM.
Refer to: Engine Control Module (303-14E Electronic Engine Controls - TDV8 4.4L Diesel, Removal and Installation).

6. Raise the vehicle.

7. Reconnect the fuel pipe clips.

8.
- Install the front left fender splash shield.
- Connect the tire pressure monitoring system front antenna electrical connector.
- Install the clips.

9. Install the fender splash shield screws.

10. Install the front left wheel.
Refer to: Wheel and Tire - TDV6 3.0L Diesel - Gen 2/GTDi 2.0L Petrol/TDV6 3.0L Diesel - Gen 1.5/TDV8 4.4L Diesel/V6 S/C 3.0L Petrol /V8 N/A 5.0L Petrol /V8 S/C 5.0L Petrol (204-04 Wheels and Tires, Removal and Installation).

11. Connect the battery ground cable.
Refer to: Specifications (414-00 Battery and Charging System - General Information, Specifications).