DENSO

Diesel Injection Pump

SERVICE MANUAL

MITSUBISHI PAJERO 4M41 ENGINE COMMON RAIL SYSTEM (CRS)

March, 2007

DENSO CORPORATION

00400597E

Table of Contents

Operation Section

1. PRODUCT APPLICATION INFORMATION

1.1 Applicable Vehicle

Vehicle Manufacture	Vehicle Name	Engine Model	Specification	Destination	Line Off Period
MITSUBISHI	PAJERO	4M41	4WD (MT/AT)	Europe, Australia	Sep, 2006

1.2 System Component Part Numbers

Parts Name	DENSO P/N	Manufacturer P/N	Remarks
Supply pump	SM294000-034#	1460A003	
Injector	SM095000-576#	1465A054	
Rail	SM095440-064#	1465A034	
Engine ECU	275800-468#	1860A699	Manual transmission vehicles only
	275800-469#	1860A702	Automatic transmission vehicles only
Boost pressure sensor	079800-779#	1865A035	
Electronic control throttle	197920-002#	1450A033	
Fuel temperature sensor	179730-002#	MR547077	
Mass air flow meter	197400-227#	1525A016	
Exhaust gas temperature sensor 1	265600-145#	1587A013	Automatic transmission vehicles only
Exhaust gas temperature sensor 2	265600-146#	1587A014	
Exhaust gas temperature sensor 3	265600-147#	1587A015	
Differential pressure sensor	104990-136#	1865A087	
Absolute pressure sensor	104990-135#	0865A086	
Temperature sensor for differential pressure sensor learning	170400-602#	1865A095	
Electric-Vacuum Regulating Valve (E-VRV) for Variable Geometry Turbo (VGT)	139700-035#	MR258166	

2. SUPPLY PUMP

2.1 Outline

- The supply pump consists primarily of the pump body (eccentric cam, ring cam, and plungers), SCV (Suction Control Valve), fuel temperature sensor, and feed pump.
- The two plungers are positioned vertically on the outer ring cam for compactness.
- The engine drives the supply pump at a ratio of 1:1. The supply pump has a built-in feed pump (trochoid type), and draws the fuel from the fuel tank, sending it to the plunger chamber.
- The internal camshaft drives the two plungers, and they pressurize the fuel sent to the plunger chamber and send it to the rail. The quantity of fuel supplied to the rail is controlled by the SCV, using signals from the engine ECU. The SCV is a normally open type (the intake valve opened during de-energization).
- The HP3 supply pump is equipped with a compact SCV.
- For information on basic HP3 supply pump operation (suction from the fuel tank, fuel delivery to the rail, etc.), refer to the publication entitled, "General Edition Manual: Common Rail System (Doc ID: 00400076E)."

Exterior View

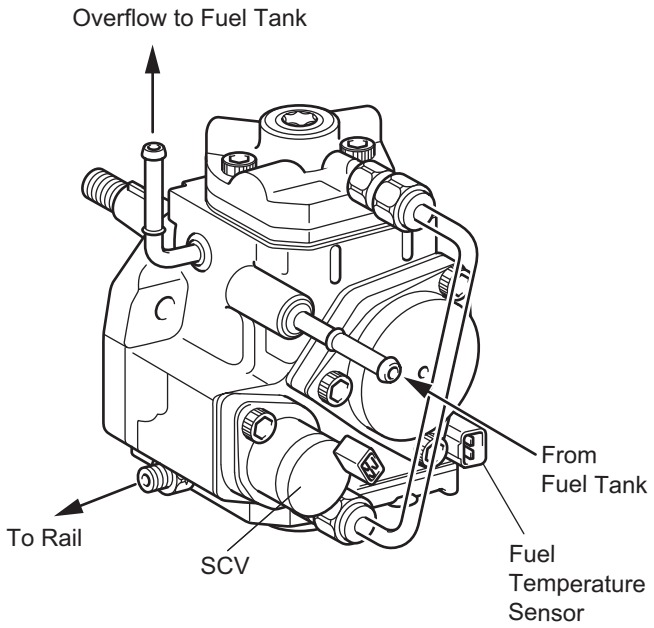

Q001228E

2.2 Suction Control Valve (SCV)

- A linear solenoid type valve has been adopted. The ECU controls the duty ratio (the duration in which current is applied to the SCV), in order to control the quantity of fuel that is supplied to the high-pressure plunger.
- Because only the quantity of fuel that is required for achieving the target rail pressure is drawn in, the actuating load of the supply pump decreases.
- When current flows to the SCV, variable electromotive force is created in accordance with the duty ratio, moving the cylinder (integrated with the armature) to the left side, and changing the opening of the fuel passage to regulate the fuel quantity.
- With the SCV OFF, the return spring contracts, completely opening the fuel passage and supplying fuel to the plungers. (Full quantity intake and full quantity discharge = normally open)
- When the SCV is ON, the force of the return spring moves the cylinder to the left, closing the fuel passage (normally open).
- By turning the SCV ON/OFF, fuel is supplied in an amount corresponding to the actuation duty ratio, and fuel is discharged by the plungers.

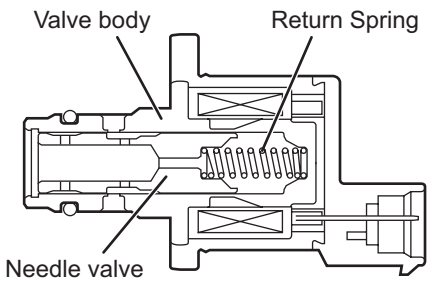

Q001113E

(1) SCV opening small (duty ON time long - refer to the "relationship between actuation signal and current" diagram.)

•When the opening of the SCV is small, the fuel suction area is kept small, which decreases the transferable fuel volume.

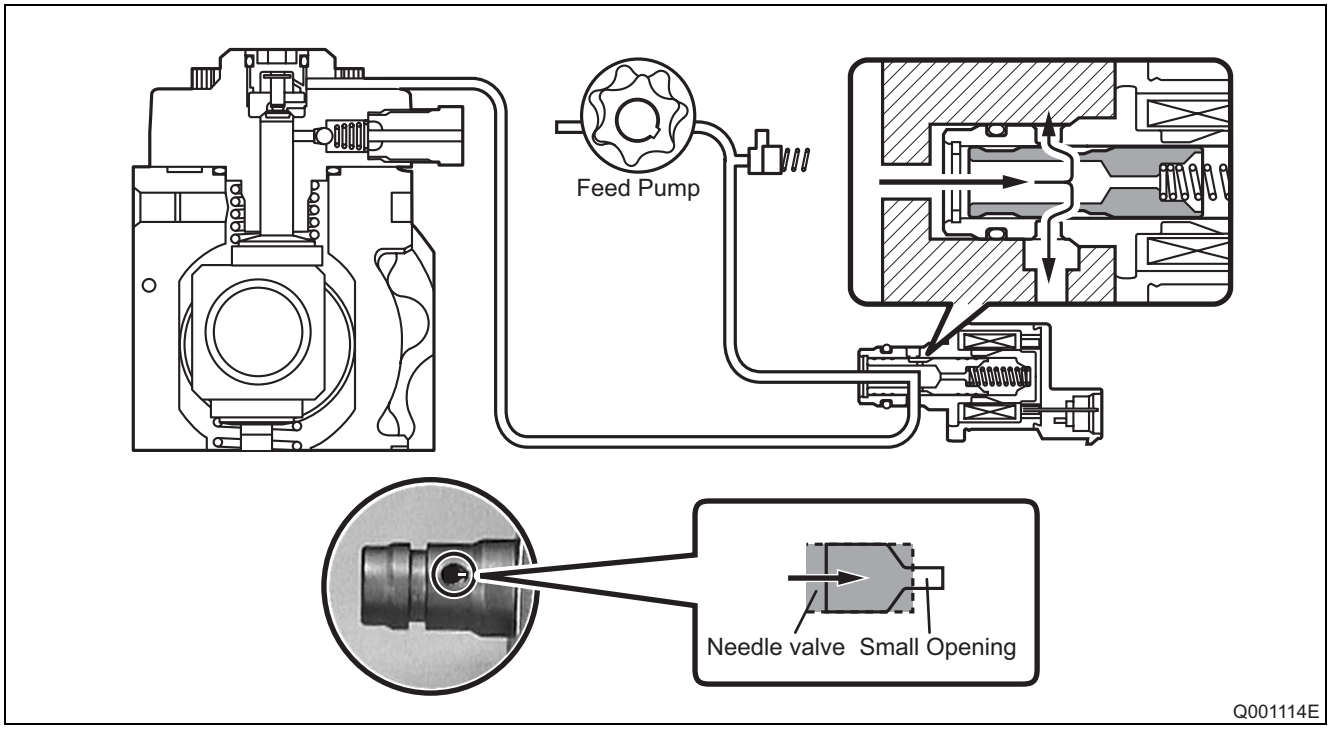

(2) SCV opening large (duty ON time short - refer to the "relationship between actuation signal and current" diagram.)

•When the opening of the SCV is large, the fuel suction area is kept large, which increases the transferable fuel volume.

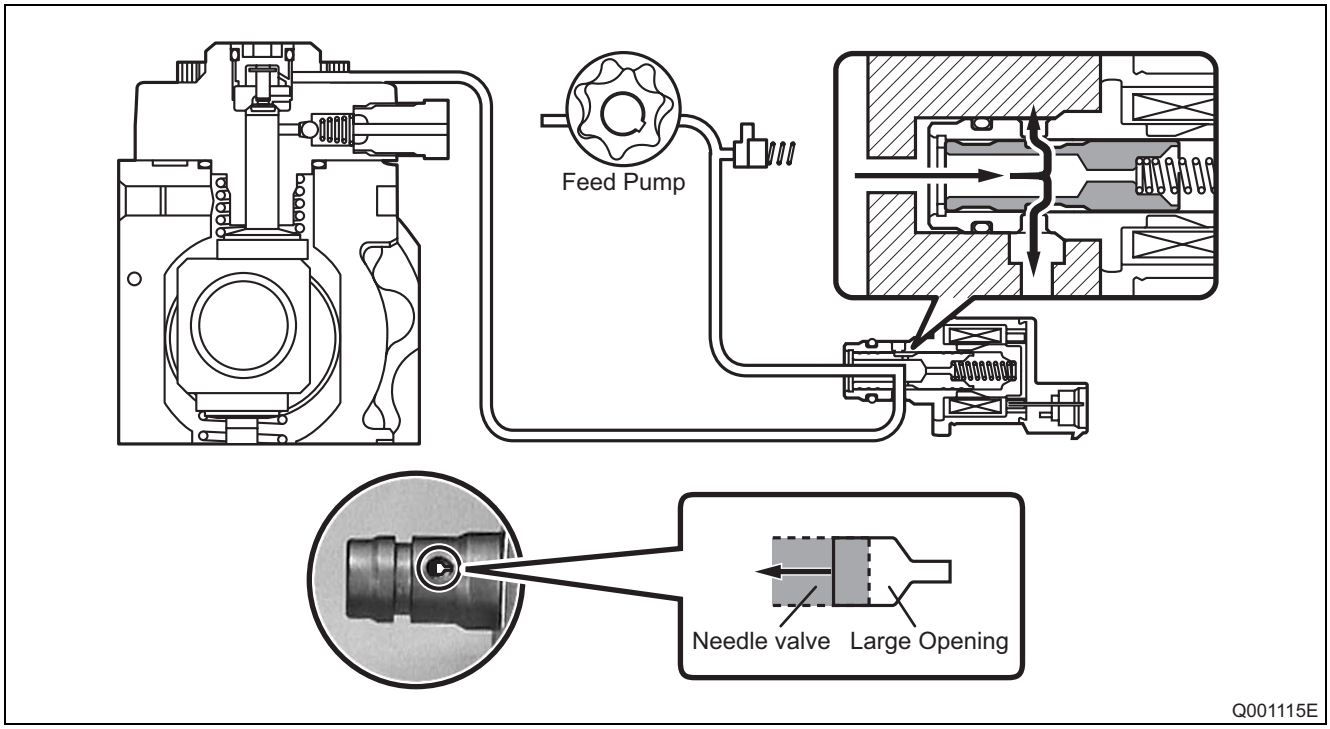

2.3 Fuel Temperature Sensor

- Detects the fuel temperature and sends a corresponding signal to the engine ECU. Based on this information, the engine ECU calculates the injection volume correction that is appropriate for the fuel temperature.

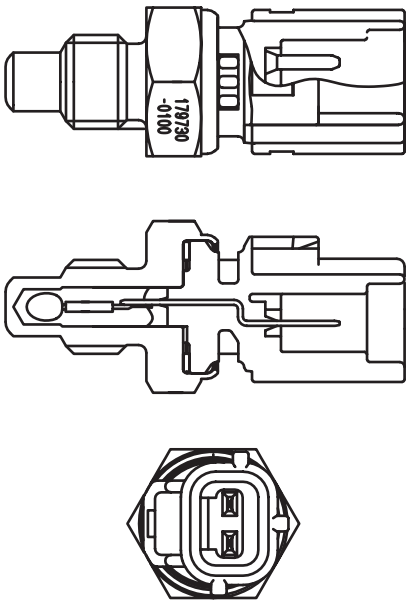

<Reference: Temperature-resistance Characteristics>

TEMPERATURE (°C)	RESISTANCE (kΩ)
- 30	(25.40)
- 20	$15.40^{+1.29}_{-1.20}$
- 10	(9.16)
0	(5.74)
10	(3.70)
20	$2.45^{+0.14}_{-0.13}$
30	(1.66)
40	(1.15)
50	(0.811)
60	(0.584)
70	(0.428)
80	0.318 ± 0.008
90	(0.240)
100	(0.1836)
110	0.1417 ± 0.0018
120	(0.1108)

Q001237E

3. RAIL

3.1 Outline

- Stores pressurized fuel (25 to 180 MPa) that has been delivered from the supply pump and distributes the fuel to each cylinder injector. A rail pressure sensor and a pressure limiter valve are adopted in the rail.
- The rail pressure sensor (Pc sensor) detects fuel pressure in the rail and sends a signal to the engine ECU, and the pressure limiter controls the excess pressure. This ensures optimum combustion and reduces combustion noise.

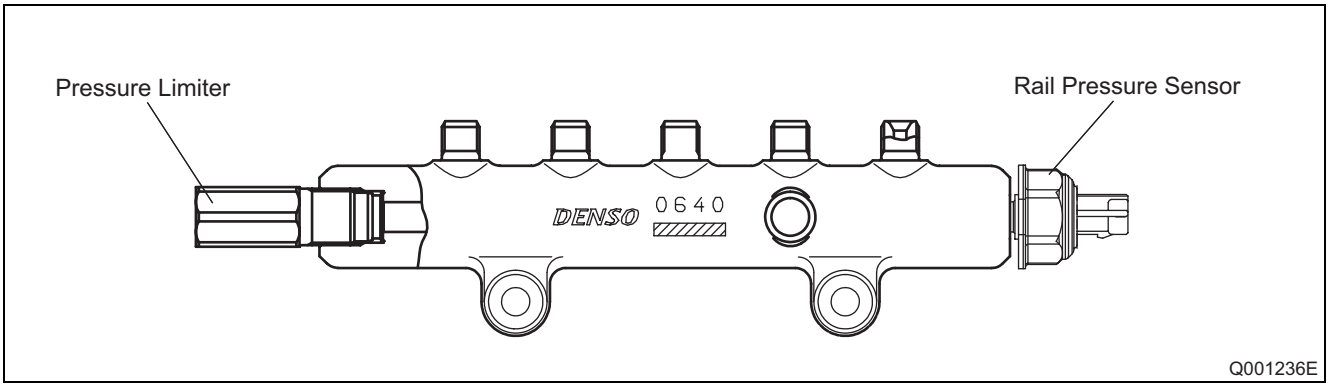

3.2 Rail Pressure Sensor (Pc Sensor)

- The pressure sensor detects the fuel pressure of the rail, and sends a signal to the engine ECU. The sensor is made from a semiconductor that uses the Piezo resistive effect to detect changes in electrical resistance based on the pressure applied to the elemental silicon. In comparison to the old model, this sensor is compatible with high pressure.

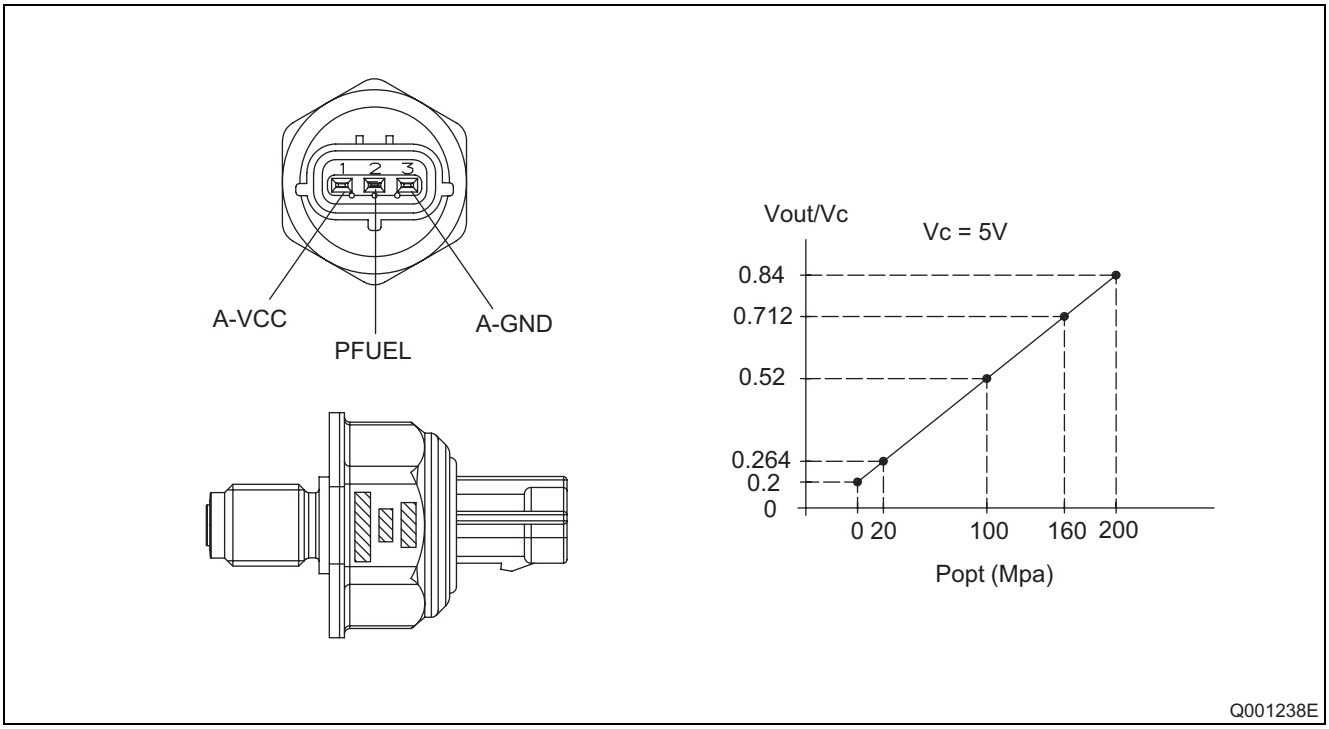

3.3 Pressure limiter

- The pressure limiter releases pressure when the internal pressure of the rail becomes abnormally high. The pressure limiter opens when internal pressure reaches 221MPa (2254 kg/cm2) and closes when rail pressure reaches a given set pressure. Fuel released from the pressure limiter is returned to the fuel tank.

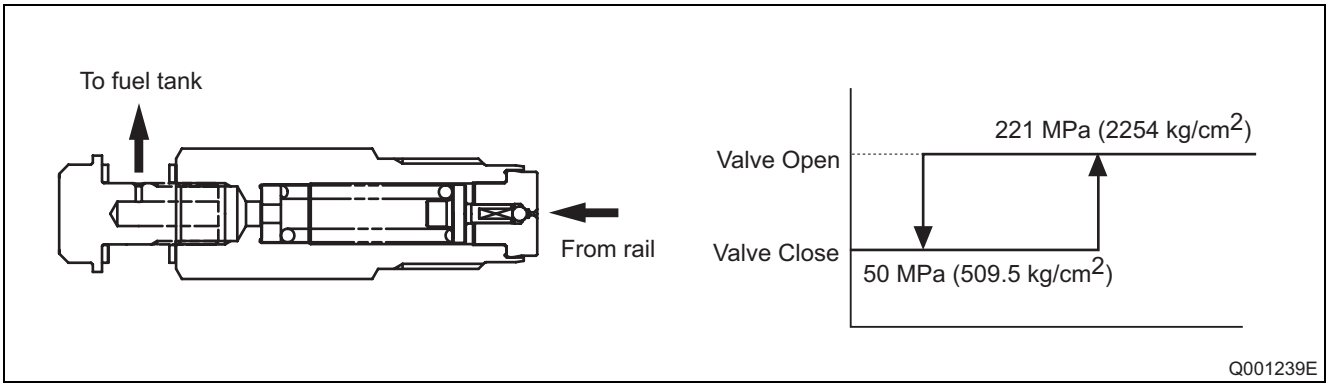

4. INJECTOR (G2 TYPE)

4.1 Outline

- The injectors inject the high-pressure fuel from the rail into the combustion chambers at the optimum injection timing, rate, and spray condition, in accordance with commands received from the ECU.
- For information on both basic injector operation and handling injectors with QR codes, refer to the publication entitled, "General Edition Manual: Common Rail System (Doc ID: 00400076E)."

4.2 Characteristics

- A compact, energy-saving solenoid-control type TWV (Two-Way Valve) injector has been adopted.
- QR codes displaying various injector characteristics and the ID codes showing these in numeric form (30 alphanumeric figures) are engraved on the injector head. The common rail system optimizes injection volume control using this information. When an injector is newly installed in a vehicle, it is necessary to enter the ID codes in the engine ECU using the MITSUBISHI diagnosis tool (MUT III).

4.3 Construction

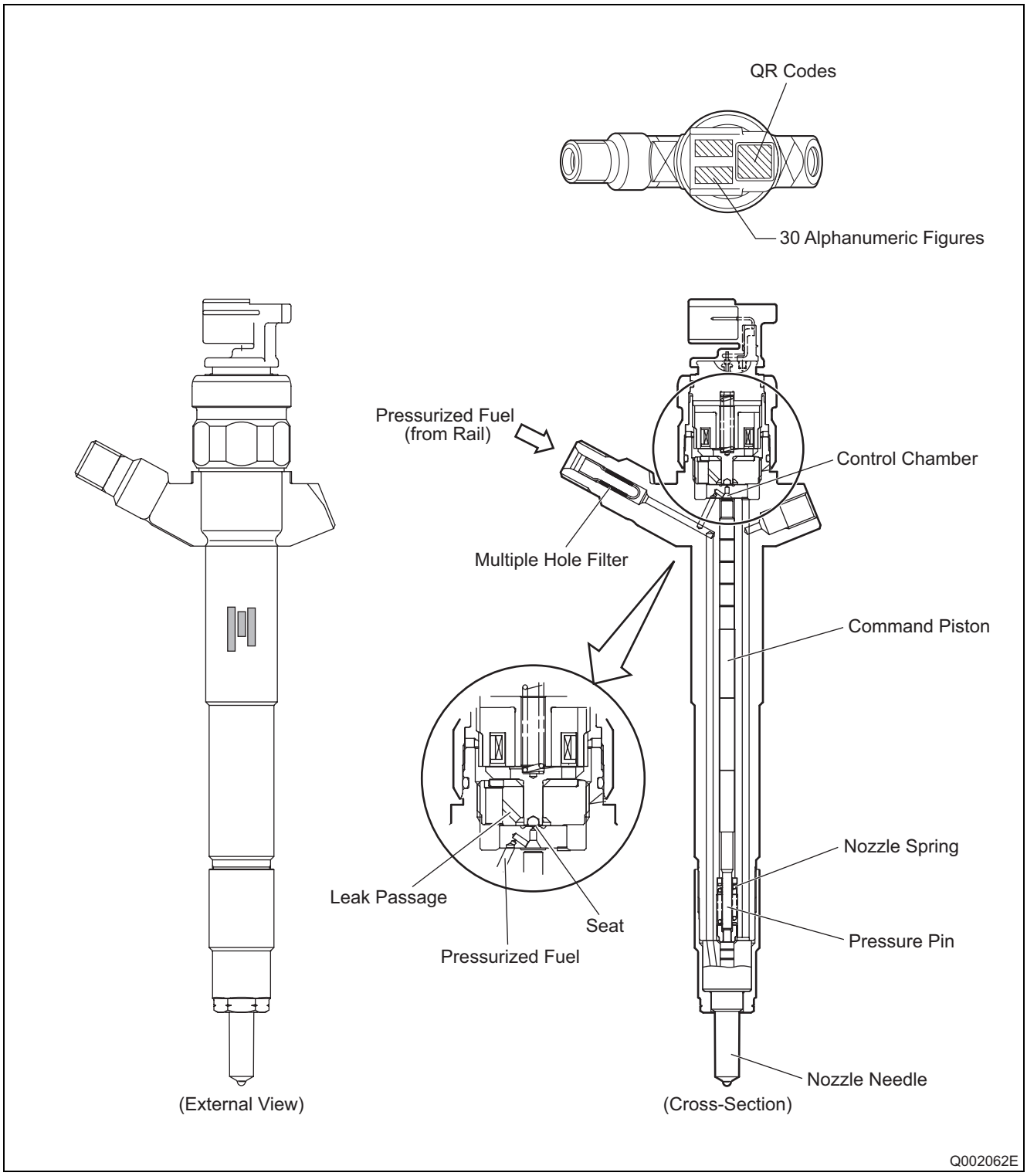

4.4 QR Codes

- Conventionally the whole injector Assy was replaced during injector replacement, but QR (Quick Response) codes have been adopted to improve injector quantity precision.

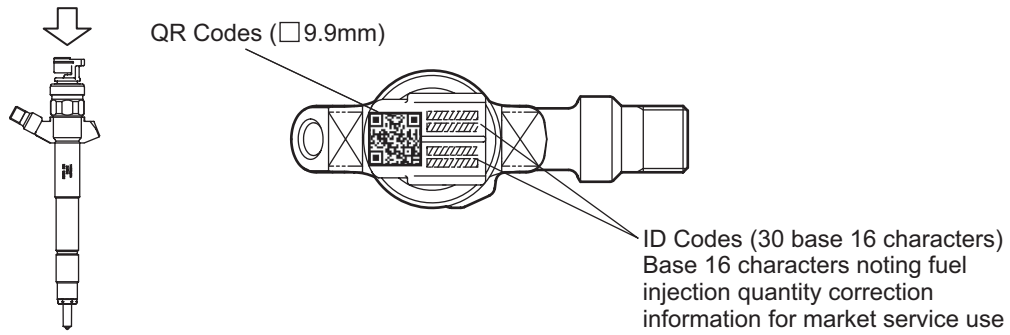

Q001242E

- QR codes have resulted in a substantial increase in the number of fuel injection quantity correction points, greatly improving precision. The characteristics of the engine cylinders have been further unified, contributing to improvements in combustion efficiency, reductions in exhaust gas emissions and so on.

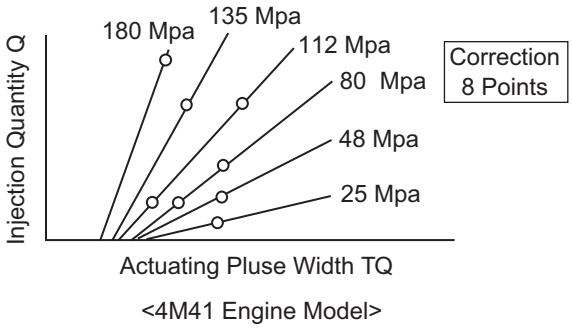

Q002063E

5. OPERATION OF CONTROL SYSTEM COMPONENTS

5.1 Engine Control System Diagram

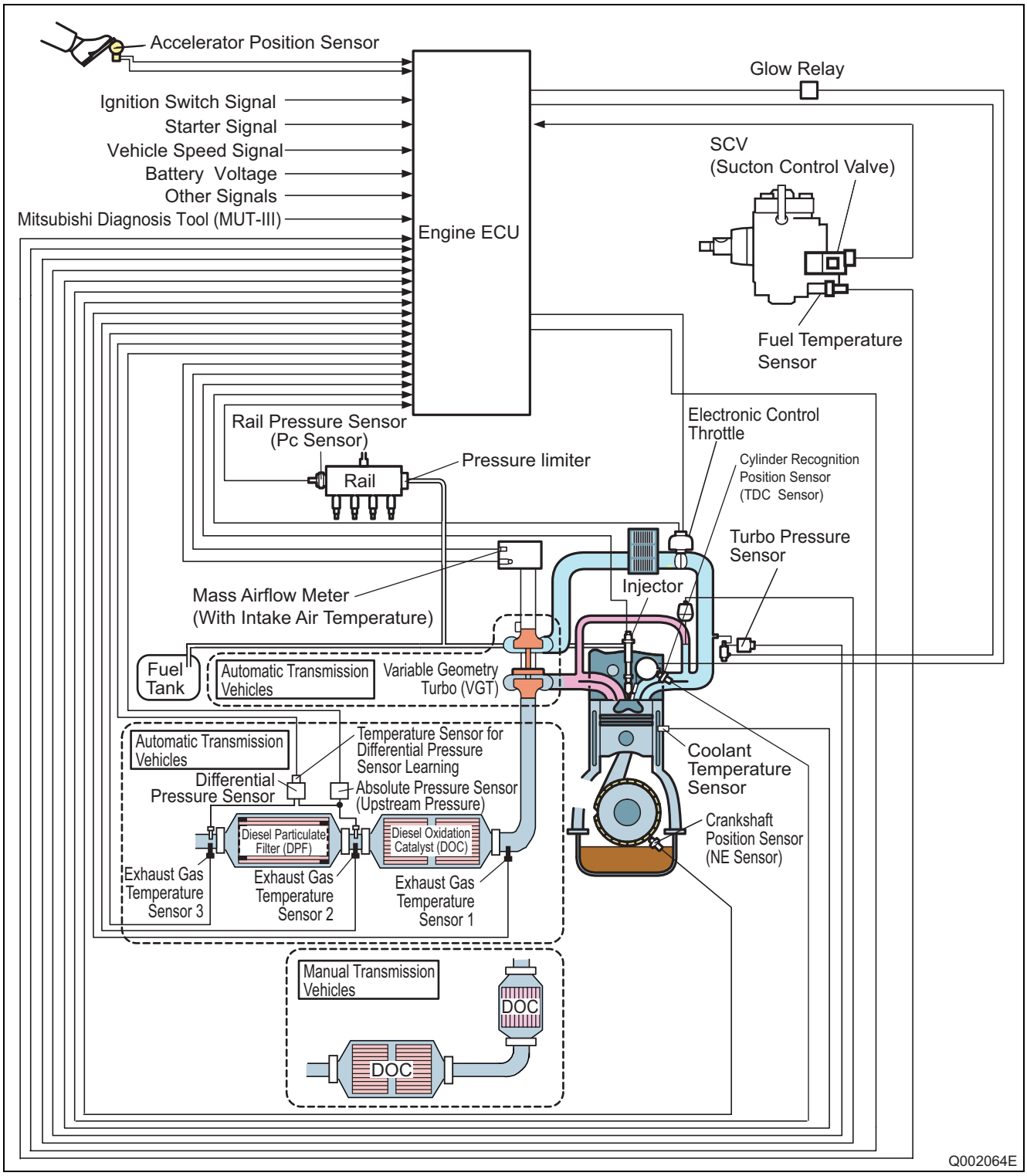

5.2 Engine ECU (Electronic Control Unit)

- This is the command center that controls the fuel injection system and the engine operation in general.

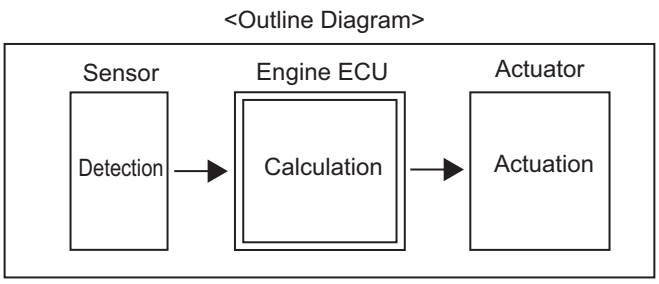

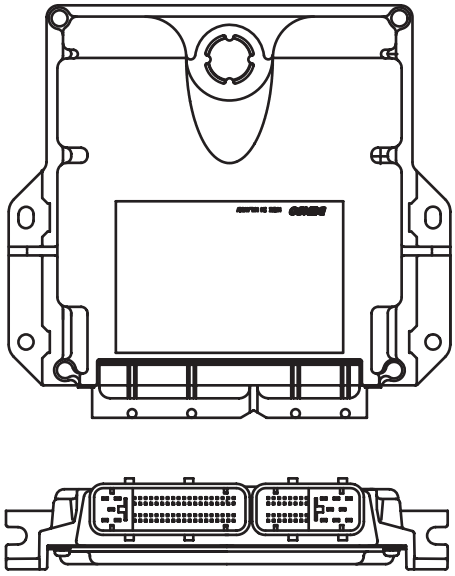

Q001248E

(1) External wiring diagram

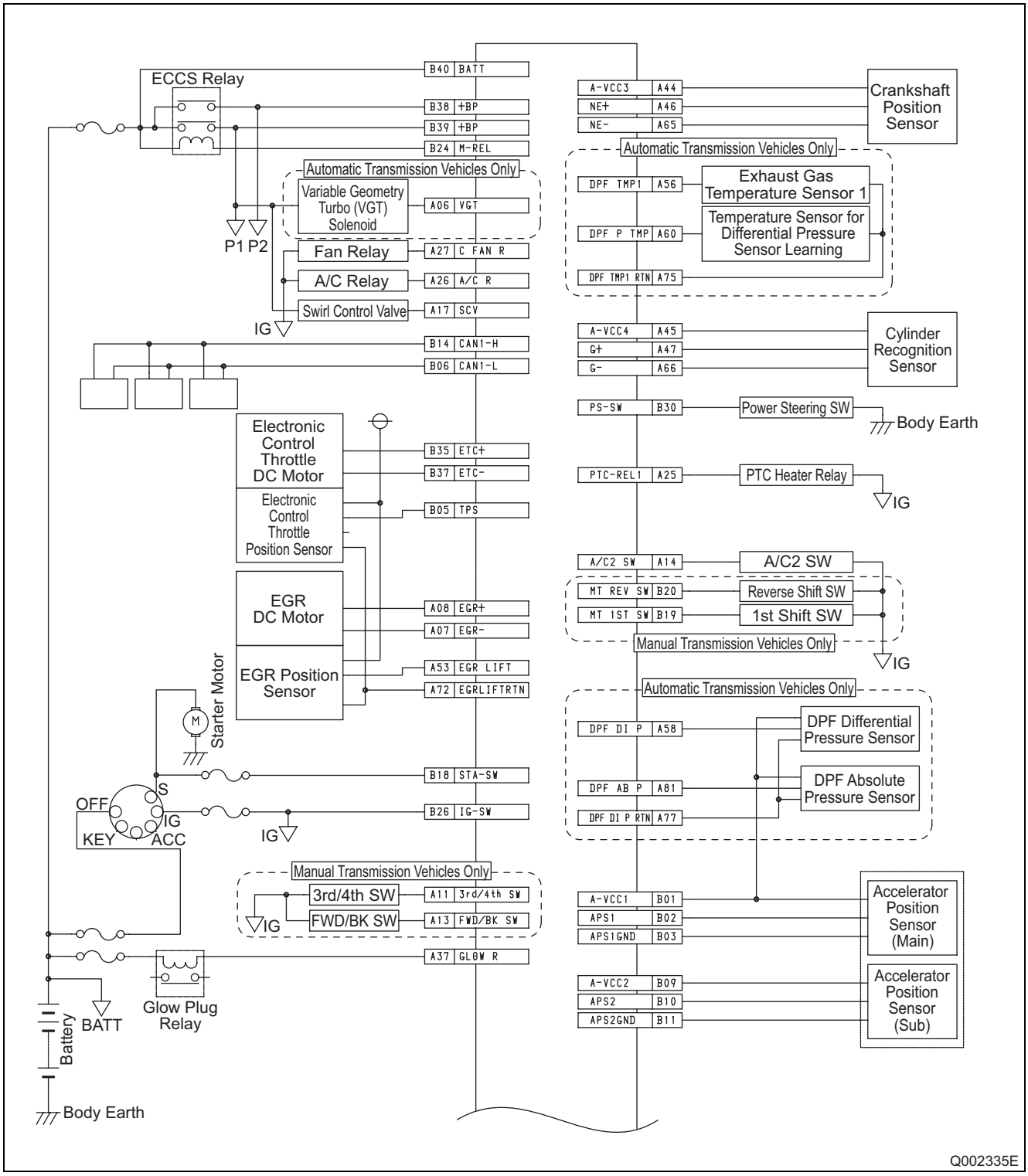

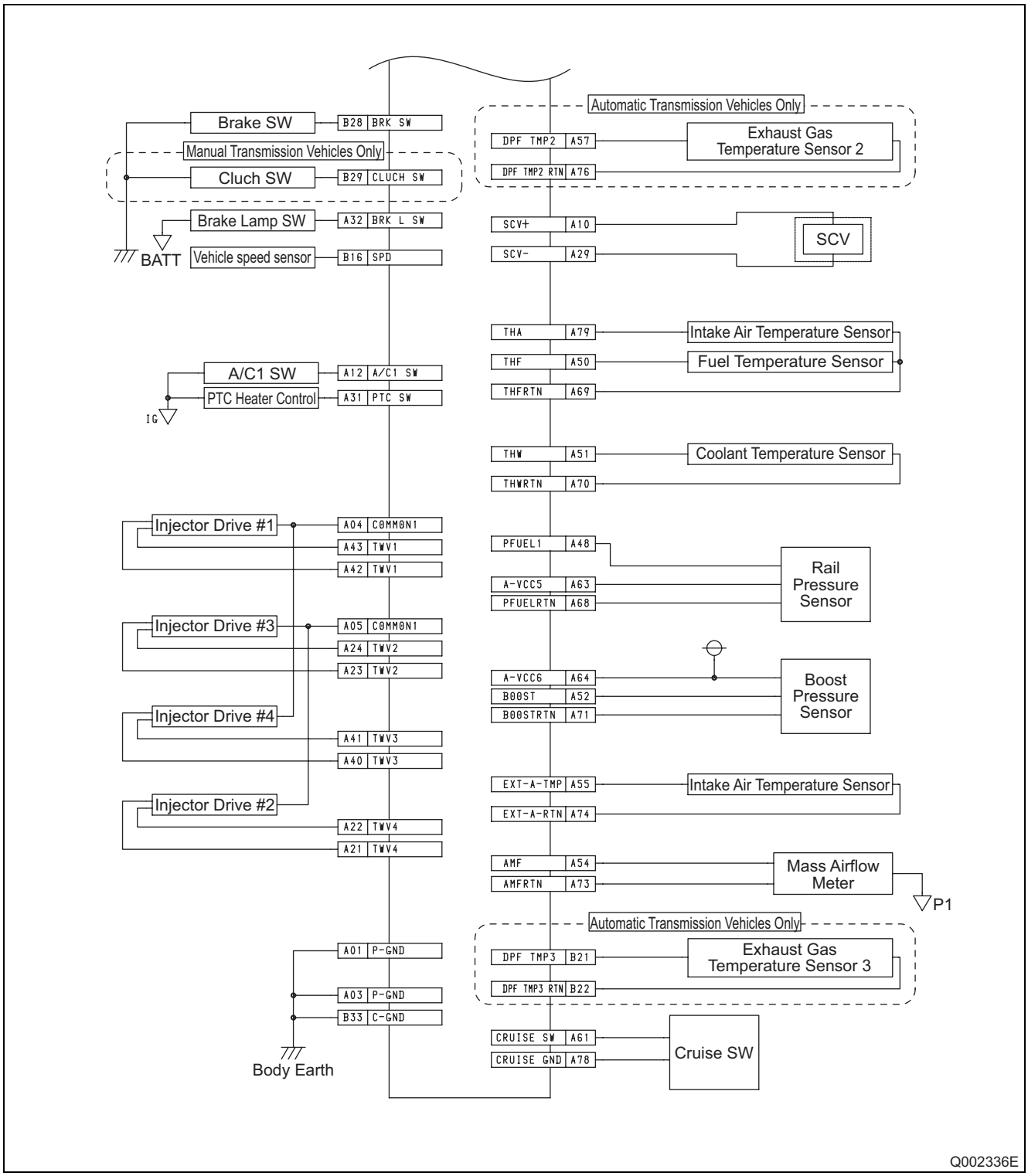
Brake SW
B28 BRK SW
Manual Transmission Vehicles Only
Cluch SW
B29 CLUCH SW
Brake Lamp SW
A32 BRK L SW
BATT
Vehicle speed sensor
B16 SPD
A/C1 SW
A12 A/C1 SW
PTC Heater Control
A31 PTC SW
IG
Injector Drive #1
A04 COMMON1
A43 TWV1
A42 TWV1
Injector Drive #3
A05 COMMON1
A24 TWV2
A23 TWV2
Injector Drive #4
A41 TWV3
A40 TWV3
Injector Drive #2
A22 TWV4
A21 TWV4
A01 P-GND
A03 P-GND
B33 C-GND
Body Earth
Automatic Transmission Vehicles Only
DPF TMP2 A57
DPF TMP2 RTN A76
Exhaust Gas Temperature Sensor 2
SCV+ A10
SCV- A29
SCV
THA A79
Intake Air Temperature Sensor
THF A50
Fuel Temperature Sensor
THFRTN A69
THW A51
Coolant Temperature Sensor
THWRTN A70
PFUEL1 A48
A-VCC5 A63
PFUELRTN A68
Rail Pressure Sensor
A-VCC6 A64
BOOST A52
BOOSTRTN A71
Boost Pressure Sensor
EXT-A-TMP A55
Intake Air Temperature Sensor
EXT-A-RTN A74
AMF A54
AMFRTN A73
Mass Airflow Meter
P1
Automatic Transmission Vehicles Only
DPF TMP3 B21
DPF TMP3 RTN B22
Exhaust Gas Temperature Sensor 3
CRUISE SW A61
CRUISE GND A78
Cruise SW
Q002336E

(2) Connector diagram

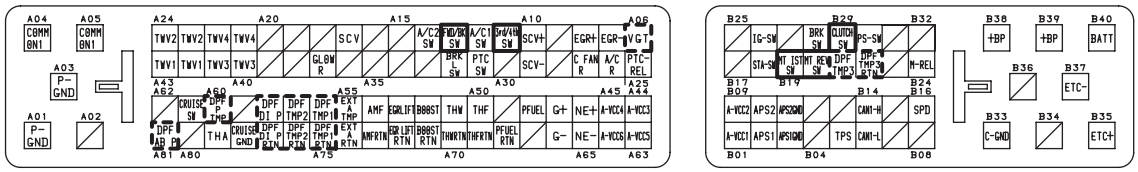

: Manual Transmission Vehicles Only
: Automatic Transmission Vehicles Only

Q002337E

Terminal connections

No.	Pin Symbol	Signal Name
A01	P-GND	Power Ground
A02		
A03	P-GND	Power Ground
A04	COMMON1	INJ#1/#4 BATT.
A05	COMMON1	INJ#2/#3 BATT.
A06	VGT (Automatic Transmission Vehicles Only)	Variable Geometry Turbo (VGT) Solenoid
A07	EGR-	EGR DC-Motor (-)
A08	EGR+	EGR DC-Motor (+)
A09		
A10	SCV+	SCV (+)
A11	3rd/4th SW (Manual Transmission Vehicles Only)	3rd/4th Shift SW
A12	A/C1 SW	A/C1 SW
A13	FWD/BK SW (Manual Transmission Vehicles Only)	FWD/BK Shift SW
A14	A/C2 SW	A/C2 SW
A15		
A16		
A17	SCV	Swirl Control Valve
A18		
A19		
A20		
A21	TWV4	Injector Drive #2
A22	TWV4	
A23	TWV2	Injector Drive #3
A24	TWV2	
A25	PTC-REL	PTC Heater Relay
A26	A/C R	A/C Relay
A27	C FAN R	Fan Relay
A28		

No.	Pin Symbol	Signal Name
A29	SCV-	SCV (-)
A30		
A31	PTC SW	PTC Heater Control
A32	BRK L SW	Brake Lamp SW
A33		
A34		
A35		
A36		
A37	GLOW R	Glow Plug Relay
A38		
A39		
A40	TWV3	Injector Drive #4
A41	TWV3	
A42	TWV1	Injector Drive #1
A43	TWV1	
A44	A-VCC3	Crankshaft Position Sensor BATT.
A45	A-VCC4	Cylinder Recognition Sensor BATT.
A46	NE+	Crankshaft Position Sensor
A47	G+	Cylinder Recognition Sensor
A48	PFUEL	Rail Pressure Sensor
A49		
A50	THF	Fuel Temperature Sensor
A51	THW	Coolant Temperature Sensor
A52	BOOST	Boost Pressure Sensor
A53	EGR LIFT	EGR Position Sensor
A54	AMF	Mass Airflow Meter
A55	EXT-A-TMP	Intake Air Temperature Sensor (W/ Mass Airflow Meter)
A56	DPF TMP1 (Automatic Transmission Vehicles Only)	Exhaust Gas Temperature Sensor 1
A57	DPF TMP2 (Automatic Transmission Vehicles Only)	Exhaust Gas Temperature Sensor 2
A58	DPF DI P (Automatic Transmission Vehicles Only)	DPF Differential Pressure Sensor
A59		
A60	DPF P TMP (Automatic Transmission Vehicles Only)	Temperature Sensor for Differential Pressure Sensor Learning
A61	CRUISE SW	Cruise Control SW (W/O IG)
A62		
A63	A-VCC5	Rail Pressure Sensor Source
A64	A-VCC6	Sensor Source (5 V)
A65	NE-	Crankshaft Position Sensor GND
A66	G-	Cylinder Recognition Sensor GND

No.	Pin Symbol	Signal Name
A67		
A68	PFUELRTN	Rail Pressure Sensor Earth
A69	THFRTN	Sensor Earth (Intake Air Temperature Sensor, Fuel Temperature Sensor)
A70	THWRTN	Coolant Temperature Sensor Earth
A71	BOOSTRTN	Boost Pressure Sensor Earth
A72	EGR LIFT RTN	Sensor Earth (EGR Position Sensor, Throttle Position Sensor)
A73	AMFRTN	Mass Airflow Meter Earth
A74	EXT-A-RTN	Intake Air Temperature Sensor Earth (W/ Mass Airflow Meter)
A75	DPF TMP1 RTN (Automatic Transmission Vehicles Only)	Exhaust Gas Temperature Sensor 1 Return
A76	DPF TMP2 RTN (Automatic Transmission Vehicles Only)	Exhaust Gas Temperature Sensor 2 Return
A77	DPF DI P RTN (Automatic Transmission Vehicles Only)	DPF differential pressure sensor Return
A78	CRUISE GND	Cruise Control SW GND
A79	THA	Intake Air Temperature Sensor
A80		
A81	DPF AB P (Automatic Transmission Vehicles Only)	DPF Absolute Pressure Sensor
B01	A-VCC1	Accelerator Position Sensor (Main) Source
B02	APS1	Accelerator Position Sensor (Main)
B03	APS1GND	Accelerator Position Sensor (Main) Earth
B04		
B05	TPS	Electronic Control Throttle Position Sensor
B06	CAN1-L	CAN Lo (W/O Resistor)
B07		
B08		
B09	A-VCC2	Accelerator Position Sensor (Sub) Source
B10	APS2	Accelerator Position Sensor (Sub)
B11	APS2GND	Accelerator Position Sensor (Sub) Earth
B12		
B13		
B14	CAN1-H	CAN Hi (W/O Resistor)
B15		
B16	SPD	Vehicle speed sensor
B17		
B18	STA-SW	Start Signal
B19	MT 1st SW (Manual Transmission Vehicles Only)	1st Shift SW
B20	MT REV SW (Manual Transmission Vehicles Only)	Reverse Shift SW

No.	Pin Symbol	Signal Name
B21	DPF TMP3 (Automatic Transmission Vehicles Only)	Exhaust Gas Temperature Sensor 3
B22	DPF TMP3 RTN (Automatic Transmission Vehicles Only)	Exhaust Gas Temperature Sensor 3 Return
B23		
B24	M-REL	Control Relay (W/ Diode)
B25		
B26	IG-SW	Ignition SW
B27		
B28	BRK SW	Brake SW (Large Current)
B29	CLUTCH SW (Manual Transmission Vehicles Only)	Clutch SW
B30	PS-SW	Power Steering SW
B31		
B32		
B33	C-GND	Signal Ground
B34		
B35	ETC+	Electronic Control Throttle Motor (+)
B36		
B37	ETC-	Electronic Control Throttle Motor (-)
B38	+BP	Battery
B39	+BP	Battery
B40	BATT	Battery (Backup W/ Monitor)

5.3 Cylinder Recognition Sensor (TDC)

- Outputs a cylinder identification signal. The sensor outputs 5 pulses for every two revolutions (720°CA) of the engine.

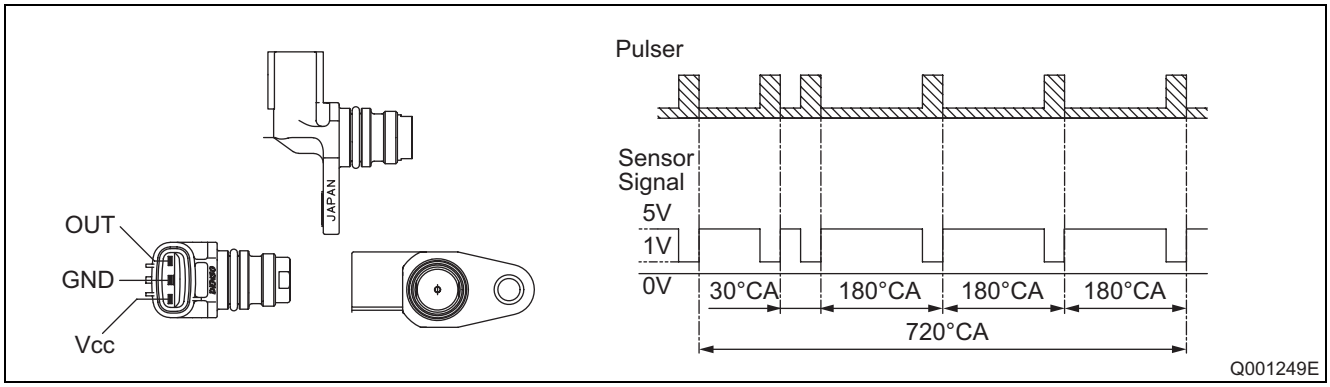

5.4 Boost Pressure Sensor

- This is a type of semi-conductor pressure sensor. It utilizes the characteristics of the electrical resistance changes that occur when the pressure applied to a silicon crystal changes. Because a single sensor is used to measure both boost pressure and atmospheric pressure, a VSV is used to alternate between atmospheric and turbo pressure measurement.

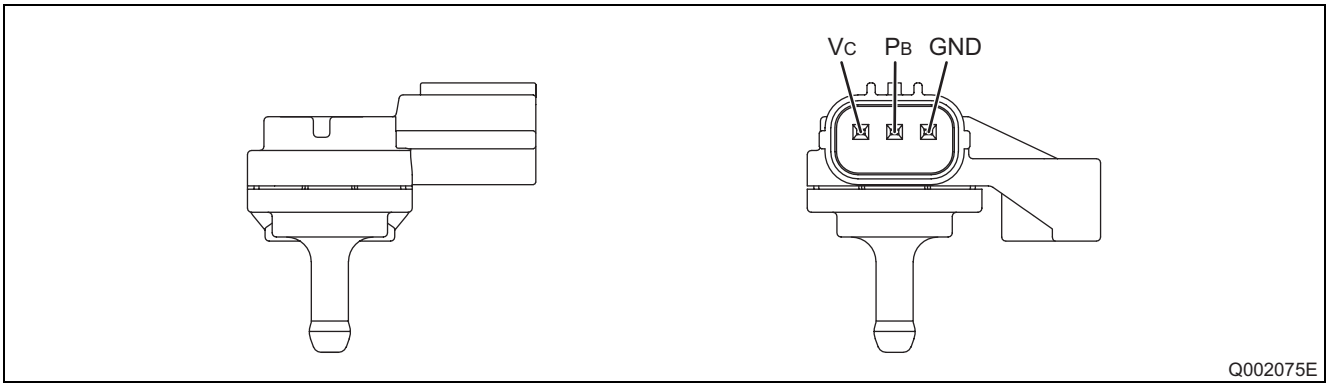

(1) Atmospheric pressure measurement conditions

•The VSV turns ON for 150msec to detect the atmospheric pressure when one of the conditions below is present:

•Engine speed = 0rpm

•Starter is ON

•Idle is stable

(2) Turbo pressure measurement conditions

•The VSV turns OFF to detect the turbo pressure if the atmospheric pressure measurement conditions are absent.

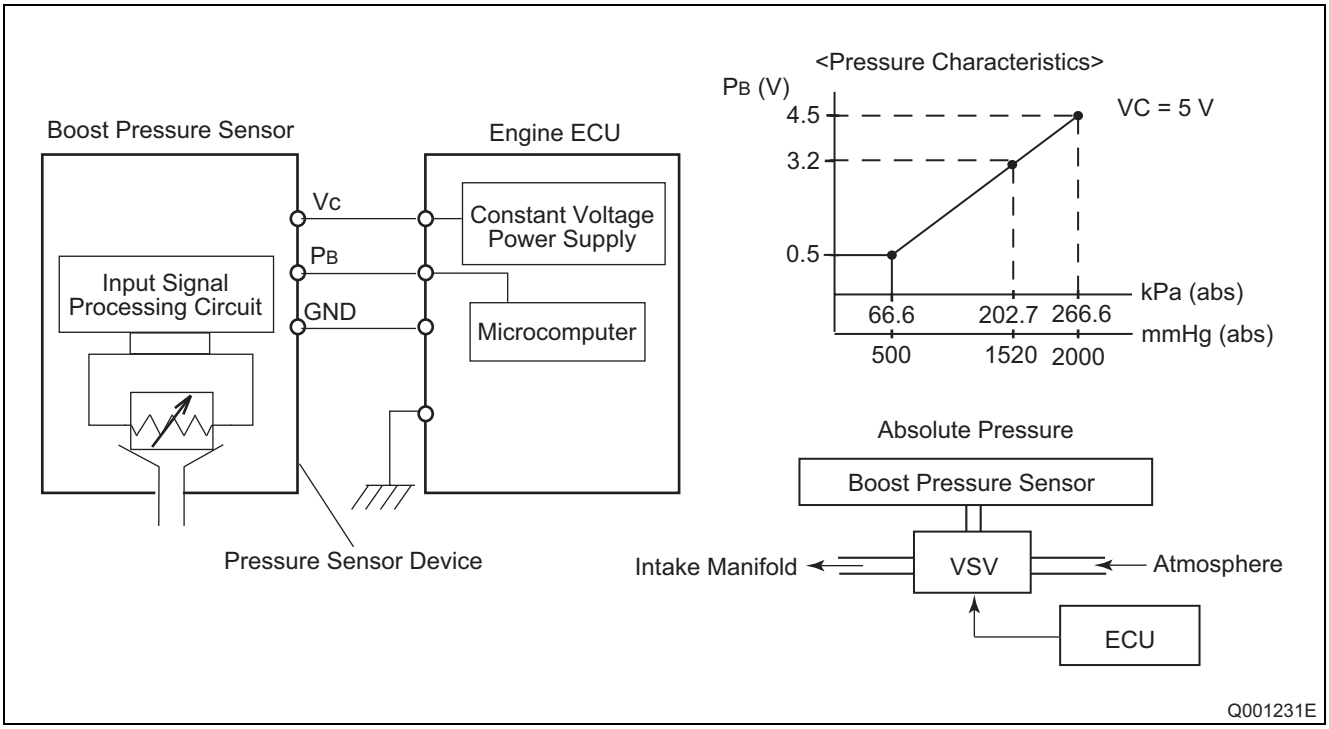

5.5 Mass Airflow Meter

- This air flow meter, which is a plug-in type, allows a portion of the intake air to flow through the detection area. By directly measuring the mass and the flow rate of the intake air, the detection precision has been improved and the intake air resistance has been reduced.
- This mass air flow meter has a built-in intake air temperature sensor.

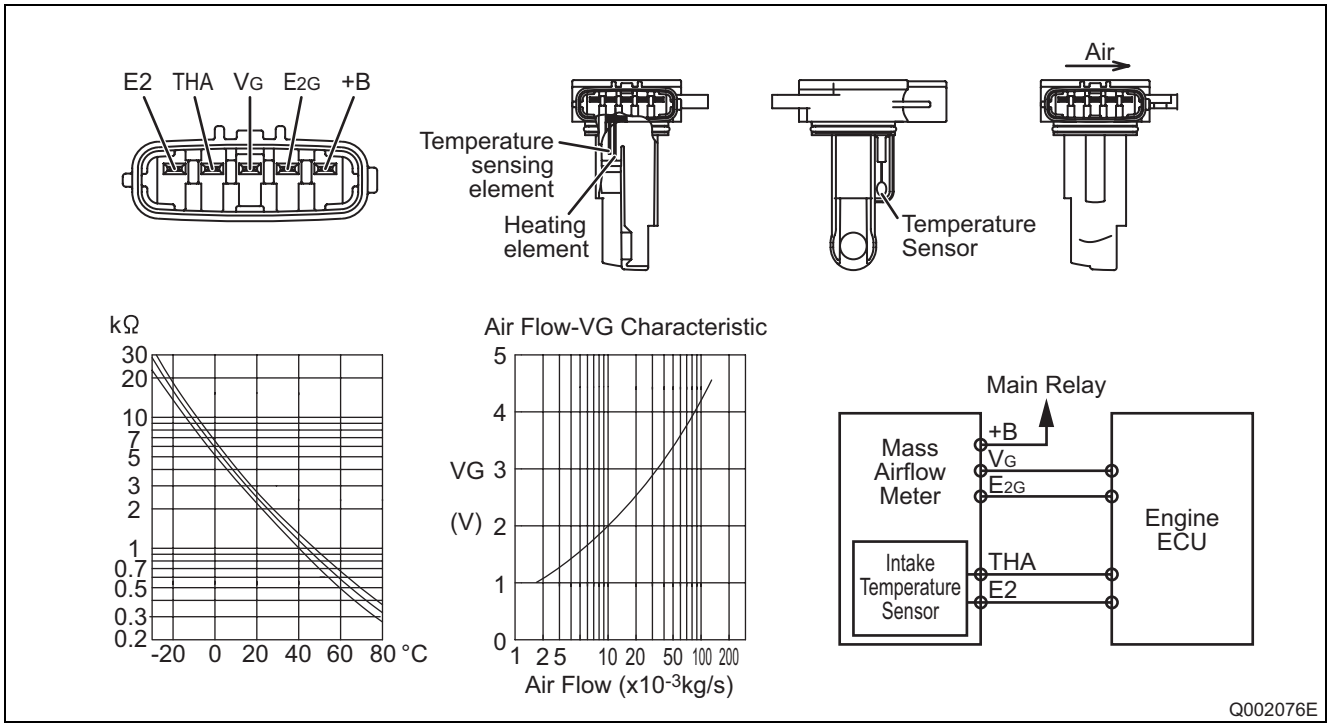

5.6 Electronic Control Throttle

(1) Outline

•The suctioning of air is stopped through interlocking the intake throttle with the key switch in order to reduce engine vibration when the vehicle is turned off.

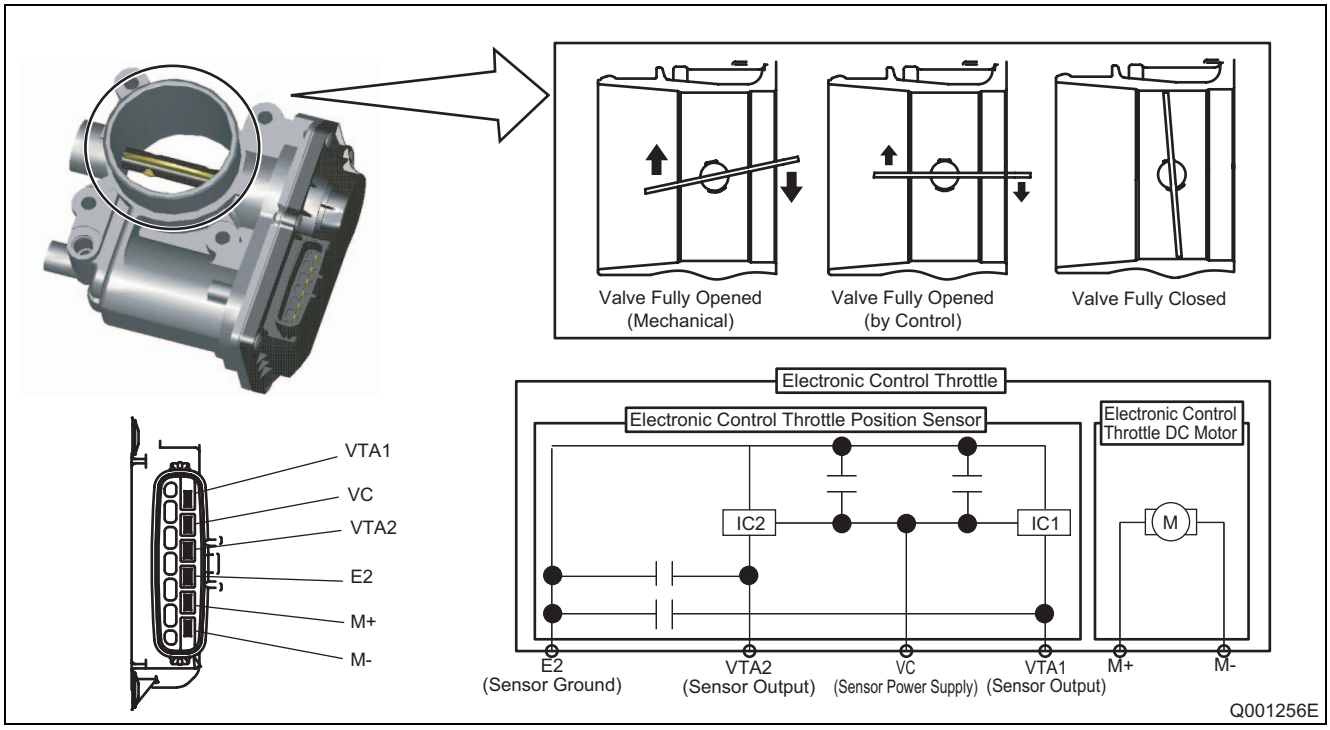

(2) Operation

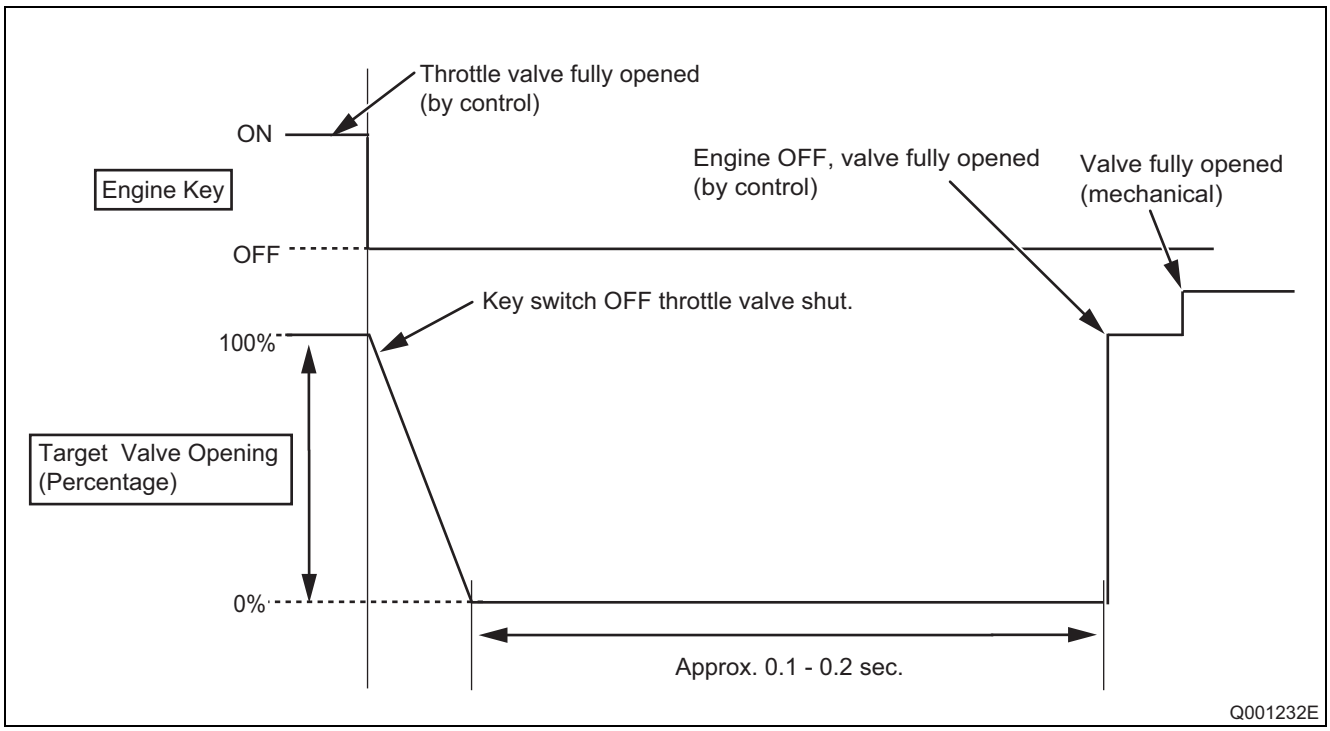

6. FUEL INJECTION CONTROL

6.1 Outline

- The following explains the types of control used in the PAJERO system. For details on each type of control, refer to the publication entitled, "General Edition Manual: Common Rail System (Doc ID: 00400076E)."

(1) Fuel injection rate control function

•Pilot injection control injects a small amount of fuel before the main injection.

(2) Fuel injection quantity control function

•The fuel injection quantity control function replaces the conventional governor function. It controls the fuel injection to an optimal injection quantity based on the engine speed and accelerator position signals.

(3) Fuel injection timing control function

•The fuel injection timing control function replaces the conventional timer function. It controls the injection to an optimal timing based on the engine speed and the injection quantity.

(4) Fuel injection pressure control function (rail pressure control function)

•The fuel injection pressure control function (rail pressure control function) controls the discharge volume of the pump by measuring the fuel pressure at the rail pressure sensor and feeding it back to the ECU. It effects pressure feedback control so that the discharge volume matches the optimal (command) value set in accordance with the engine speed and the injection quantity.

6.2 Fuel Injection Quantity Control

- The following explains controls unique to the PAJERO. For other types of basic fuel injection quantity control, refer to the publication entitled, "General Edition Manual: Common Rail System (Doc ID: 00400076E)."

(1) Maximum injection quantity

•The basic maximum injection quantity is determined by the engine speed, the added corrections for intake air pressure, and gear position.

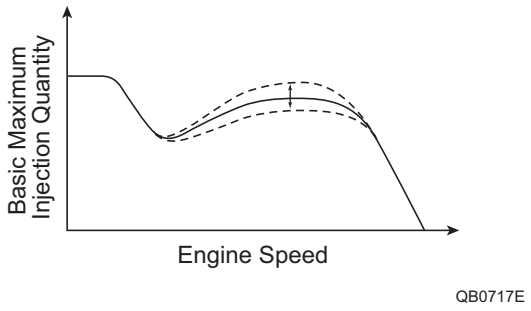

(2) Idle speed control (ISC) system

•This system controls the idle speed by regulating the injection quantity in order to match the actual speed to the target speed calculated by the engine ECU.

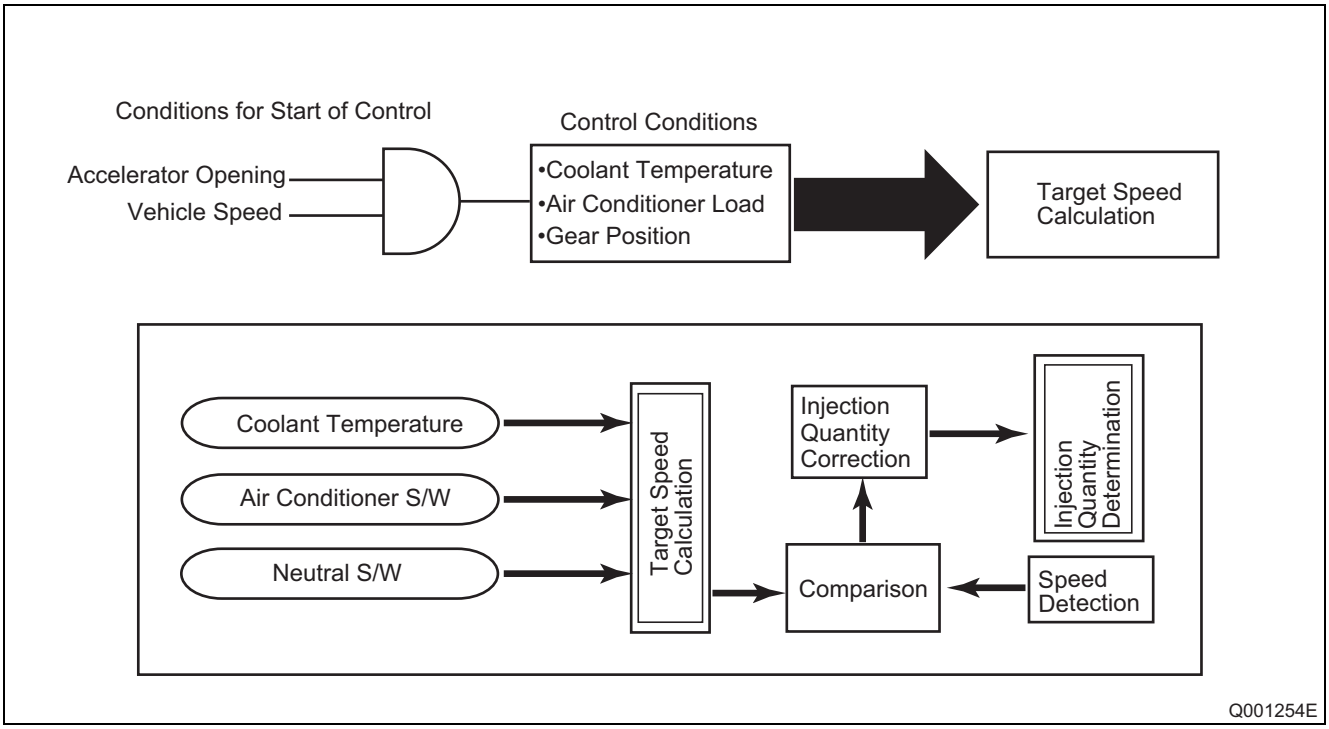

•The target speed varies, depending on the ON/OFF state of the air conditioner and the coolant temperature.

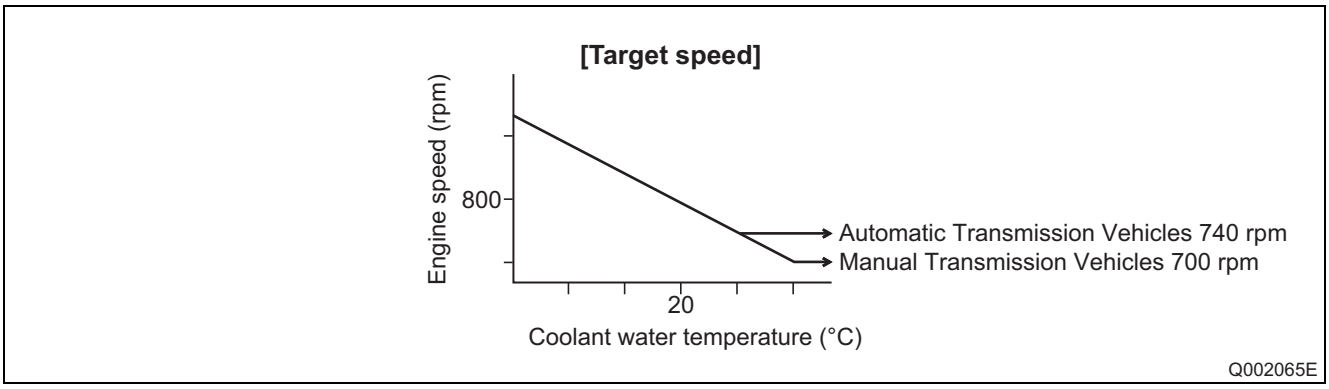

6.3 Other Controls

- The following explains microinjection quantity learning control.

(1) Microinjection quantity learning control

Outline

•Quantity learning control is used in every vehicle engine (injector) to preserve the accuracy of quantity (specifically, pilot injection quantity.)

This type of control is first performed when shipped from the factory (L/O), and later is automatically performed every time the vehicle runs a set distance (for details, see item "A".) Because of quantity learning control, the accuracy of each injector can be preserved not only initially, but also as deterioration in injection occurs over time. As a result of this learning, correction values are recorded in the ECU. During normal driving operations, this correction value is used to make modifications to injection commands, resulting in accurate microinjection.

Learning operations

•For every two no load, idle instability conditions established (See chart "A" below) quantity learning takes place.

In addition, it is also possible to perform quantity learning control manually as a diagnostic tool.

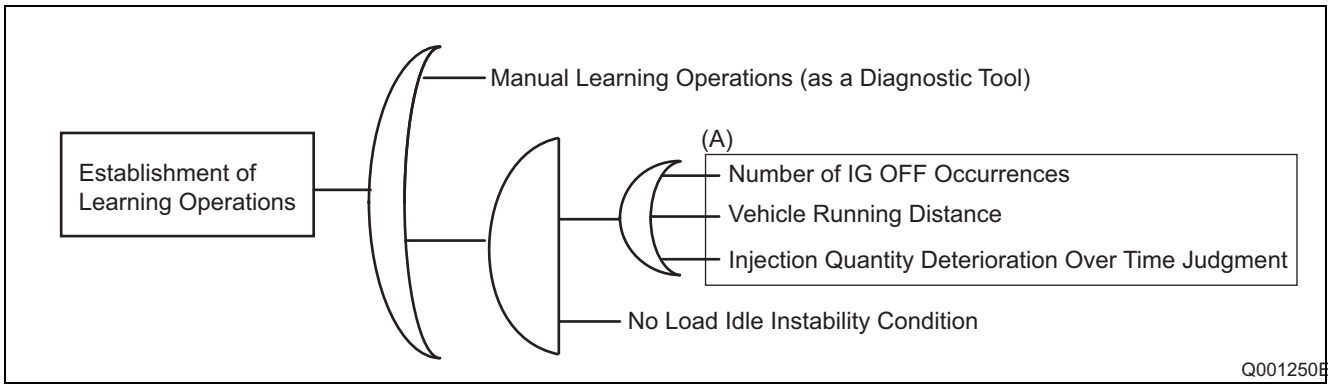

Operational outline

•Learning control sends ISC (target speed correction quantity) and FCCB (cylinder-to-cylinder correction quantity) feedback based on engine speed to apply injection control. The correction quantity is added to each cylinder based on ISC and FCCB correction information. The corrected injection quantity is then calculated.Through the use of quantity learning control, injection is divided into 5 injections. In this state, the value for ISC and FCCB corrected injection quantity that has been divided into five injections is calculated as the "learning value".

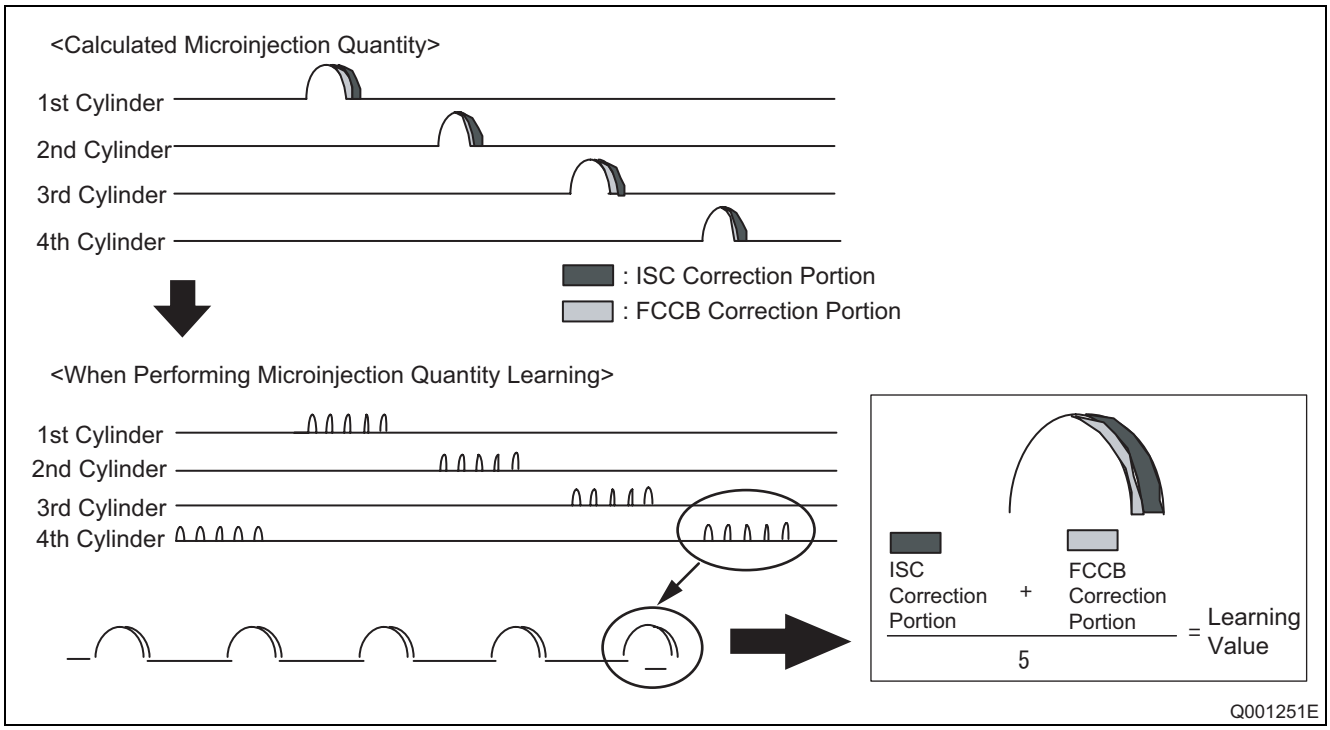

7. OTHER SYSTEMS

7.1 Outline

- The following explains the Diesel Particulate Filter (DPF) System installed in PAJEROs equipped with an automatic transmission.

7.2 Diesel Particulate Filter (DPF) System

Outline

- For details on basic DTP construction and operation, refer to the publication entitled, "General Edition Manual: Common Rail System (Doc ID: 00400076E)." The following explains the newly added temperature sensor, used for differential pressure sensor learning.

Temperature Sensor for Differential Pressure Sensor Learning

- The temperature sensor for differential pressure sensor learning is attached to the differential pressure sensor. The temperature sensor detects differential pressure sensor temperature in order to make temperature corrections.

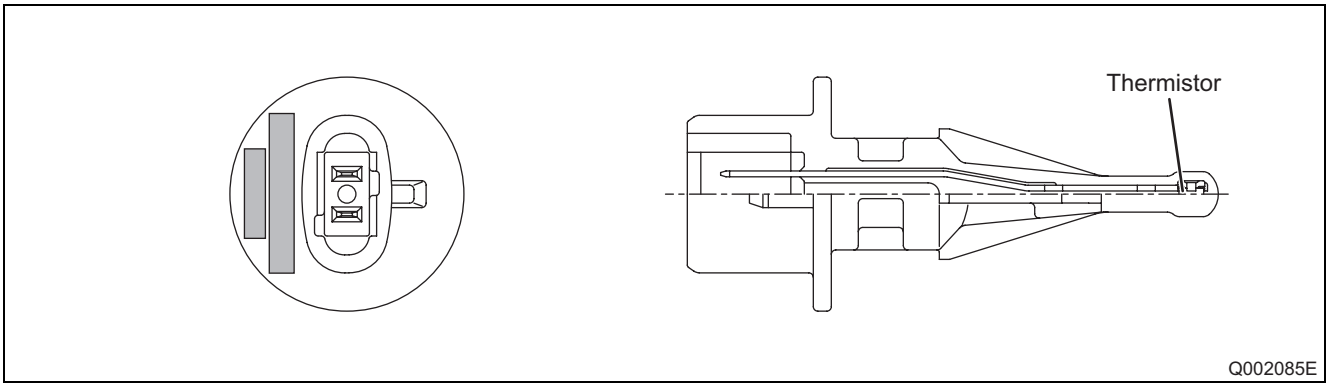

8. DIAGNOSTIC TROUBLE CODES (DTC)

8.1 About the Codes Shown in the Table

- The "SAE" diagnostic trouble code indicates the code that is output through the use of the STT (MUT-III). (SAE: Society of Automotive Engineers)

8.2 Diagnostic Trouble Code Details

DTC Number (SAE)	Diagnostic Item	Light ON	Remarks
P0016	Crankshaft position sensor-Cylinder recognition sensor phase gap mal-function	Yes	
P0047	Turbo PWM output - low	Yes	Automatic transmission vehicles only
P0048	Turbo PWM output - high	Yes	
P0072	Intake manifold temperature sensor - low	Yes	
P0073	Intake manifold temperature sensor - high	Yes	
P0088	Rail high pressure abnormality	Yes	
P0089	SCV stuck diagnosis	Yes	
P0093	Fuel leak	Yes	
P0102	Mass Airflow Meter - low	Yes	
P0103	Mass Airflow Meter - high	Yes	
P0106	Boost pressure sensor characteristic abnormality	Yes	
P0107	Boost pressure sensor - low	Yes	
P0108	Boost pressure sensor - high	Yes	
P0112	Intake air temperature sensor - low	Yes	
P0113	Intake air temperature sensor - high	Yes	
P0117	Coolant temperature sensor - low	Yes	
P0118	Coolant temperature sensor - high	Yes	
P0122	Electronic control throttle - low	Yes	
P0123	Electronic control throttle - high	Yes	
P0182	Fuel temperature sensor - low	Yes	
P0183	Fuel temperature sensor - high	Yes	
P0191	Rail pressure sensor characteristic abnormality	Yes	
P0192	Rail pressure sensor (time) low	Yes	
P0193	Rail pressure sensor (time) high	Yes	
P0201	TWV 1 (No.1 cylinder) actuation system open circuit	Yes	
P0202	TWV 4 (No.2 cylinder) actuation system open circui	Yes	
P0203	TWV 2 (No.3 cylinder) actuation system open circuit	Yes	
P0204	TWV 3 (No.4 cylinder) actuation system open circuit	Yes	

DTC Number (SAE)	Diagnostic Item	Light ON	Remarks
P0219	Engine overrun abnormality	No	
P0234	High boost abnormality diagnosis	Yes	Manual transmission vehicles only
P0301	Injector function (non - injection) 1	Yes	
P0302	Injector function (non - injection) 2	Yes	
P0303	Injector function (non - injection) 3	Yes	
P0304	Injector function (non - injection) 4	Yes	
P0335	No crankshaft position sensor pulse input	Yes	
P0336	Abnormal crankshaft position sensor pulse number	Yes	
P0340	No cylinder recognition sensor pulse input	Yes	
P0341	Cylinder recognition sensor pulse number abnormality	Yes	
P0403	EGR DC motor abnormality	Yes	
P0405	EGR lift sensor - low	Yes	
P0406	EGR lift sensor - high	Yes	
P0420	Diesel Oxidation Catalyst (DOC) temperature increase failure during regeneration	Yes	Automatic transmission vehicles only
P0427	Exhaust gas temperature sensor 2 - low	Yes	
P0428	Exhaust gas temperature sensor 2 - high	Yes	
P0472	Diesel Particulate Filter (DPF) absolute pressure sensor - low	Yes	
P0473	DPF absolute pressure sensor - high	Yes	
P0502	Vehicle speed abnormality - low	Yes	
P0513	Immobilizer authenticating error	Yes	
P0545	Exhaust gas temperature sensor 1 - low	Yes	Automatic transmission vehicles only
P0546	Exhaust gas temperature sensor 1 - high	Yes	
P0551	Power Steering Switch ON malfuncion	Yes	
P0603	EEPROM abnormality	Yes	
P0604	RAM abnormality	Yes	
P0605	Engine ECU flash-ROM abnormality	Yes	
P0606	Engine ECU CPU abnormality (main IC abnormality)	Yes	
P0607	Engine ECU abnormality (monitoring IC abnormality)	Yes	
P0628	SCV actuation system abnormality	Yes	
P0629	SCV +B short	Yes	
P0630	Vehicle Identification Number (VIN) not registered in Engine ECU	Yes	
P0638	Electronic control throttle stuck	Yes	
P0642	Sensor - voltage 1 low	Yes	
P0643	Sensor - voltage 1 high	Yes	
P0652	Sensor - voltage 2 low	Yes	
P0653	Sensor - voltage 2 high	Yes	
P1203	Low charge	Yes	
P1204	Over charge	Yes	

DTC Number (SAE)	Diagnostic Item	Light ON	Remarks
P1272	Pressure limiter open valve abnormality	Yes	
P1273	Supply pump single-side element abnormality	Yes	
P1274	Supply pump protective fail flag	Yes	
P1275	Supply pump replace fail flag	Yes	
P1298	Turbo system (positive deviation)	Yes	Automatic transmission vehicles only
P1299	Turbo system (negative deviation)	Yes	
P1427	Exhaust gas temperature sensor 3 - low	Yes	
P1428	Exhaust gas temperature sensor 3 - high	Yes	
P1474	Differential pressure sensor temperature sensor low	Yes	
P1475	Differential pressure sensor temperature sensor high	Yes	
P1497	DOC regeneration time exceeded	Yes	
P1498	Regeneration timing abnormality	Yes	
P1499	DPF heat loss temperature abnormality	Yes	
P1564	Cruise control switch abnormality	No	
P1571	Brake switch abnormality	No	
P1625	QR data abnormality	Yes	
P1626	QR data failure to write abnormality	Yes	
P2009	Swirl control (VSS) output (VSV) open load/short to GND	Yes	
P2010	Swirl control (VSS) output (VSV) short to BATT	Yes	
P2118	Electronic control throttle DC motor over current abnormality	Yes	
P2122	Accelerator position sensor-1 low	Yes	
P2123	Accelerator position sensor-1 high final	Yes	
P2124	Accelerator position sensor-1 high	No	
P2127	Accelerator position sensor-2 low	Yes	
P2128	Accelerator position sensor-2 high final	Yes	
P2138	Accelerator positon sensor - duplicate malfunction high	Yes	
	Accelerator position sensor - duplicate malfunction low	Yes	
	Accelerator position sensor characteristic abnormality	Yes	
P2146	Common 1 system open circuit	Yes	
P2147	COM1 TWV actuation system ground short	Yes	
P2148	COM1 TWV actuation system +B short	Yes	
P2149	Common 2 system open circuit	Yes	
P2228	Atmospheric pressure sensor - low	Yes	
P2229	Atmospheric pressure sensor - high	Yes	
P2413	EGR feedback abnormality	Yes	
P2454	Differential pressure sensor low	Yes	Automatic transmission vehicles only
P2455	Differential pressure sensor high	Yes	
P252F	Oil level abnormality	No	
UD073	CAN bus OFF error	No	

DTC Number (SAE)	Diagnostic Item	Light ON	Remarks
UD101	CAN time out flag (trans)	No	Automatic transmission vehicles only
UD102	CAN time out flag (ESP)	No	
UD109	CAN time out flag (ETACS)	No	
UD117	CAN time out flag (immobilizer)	No	

Published : March 2007

Edited and published by:

DENSO CORPORATION

Service Department

1-1 Showa-cho, Kariya, Aichi Prefecture, Japan