DIESEL FUEL <4D5>

Click on the applicable bookmark to selected the required model year.

DIESEL FUEL <4D5>

CONTENTS

GENERAL INFORMATION

The fuel is drawn out of the fuel tank by means of the feed pump which is built into the fuel injection pump. It then passes through the fuel filter and is fed to the injection pump.
The fuel is pressurized by the feed pump, and this fuel pressure is controlled by the regulating valve which is built into the pump. Then, the fuel is compressed by the plunger and injected from the nozzles at high pressure in accordance with the injection sequence.

Engine speed (fuel injection amount) control is carried out by means of a centrifugal-type governor using a flyweight.
Fuel injection timing control is carried out by a hydraulic timer. The hydraulic timer operates by the fuel pressure inside the pump chamber. This pressure is controlled by the regulating valve.

SERVICE SPECIFICATIONS

Items	Standard value
Injection timing control solenoid coil resistance Ω	8 - 10
Fuel injection initial pressure kPa	14,710 - 15,690

SPECIAL TOOL

Tool	Number	Name	Use
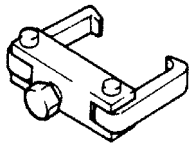	MD998388	Injection pump sprocket puller	Fuel injection pump sprocket removal

ON-VEHICLE SERVICE

FUEL INJECTION TIMING CHECK AND ADJUSTMENT

Refer to GROUP 11B - On-vehicle Service.

ENGINE IDLE SPEED CHECK AND ADJUSTMENT

Refer to GROUP 11B - On-vehicle Service.

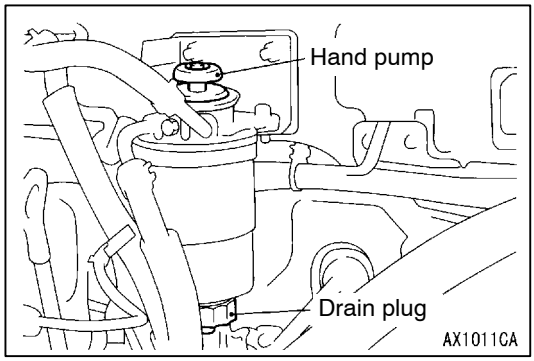

EVACUATION OF WATER FROM FUEL FILTER

Water is in the filter when fuel filter warning lamp lights. Evacuate water by the following procedures.
1. Loosen drain plug.
2. Drain water with hand pump. Finger-tighten drain plug.

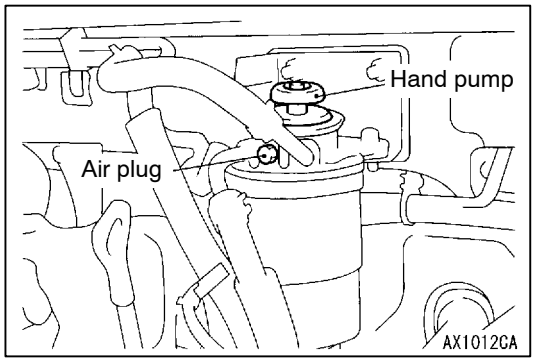

EVACUATION OF AIR FROM FUEL LINE

Bleed the air from the fuel line after refilling the fuel.

- When fuel is drained for service.
- When fuel filter is replaced.
- When main fuel line is removed.

1. Loosen fuel filter air plug.
2. Place rags around air plug hole. Operate hand pump repeatedly until no bubbles come from plug hole. Tighten air plug.
3. Repeat until hand pump operation becomes stiff.

FUEL FILTER CARTRIDGE REPLACEMENT

Refer to GROUP 13D.

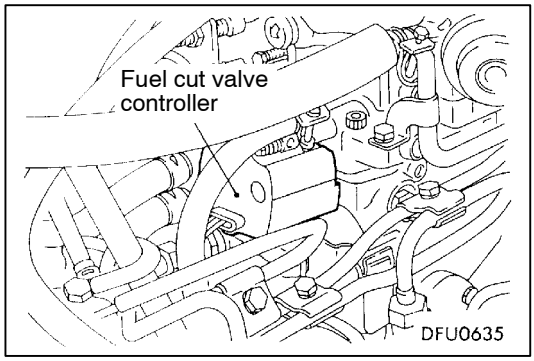

FUEL INJECTION PUMP CHECK

FUEL CUT VALVE CONTROLLER OPERATION CHECK

When a sound scope is held against the fuel cut valve controller and the ignition switch is turned to “ON”, check that the sound of the valve operating can be heard.
If no operating sound can be heard, check the immobilizer system while referring to GROUP 54.

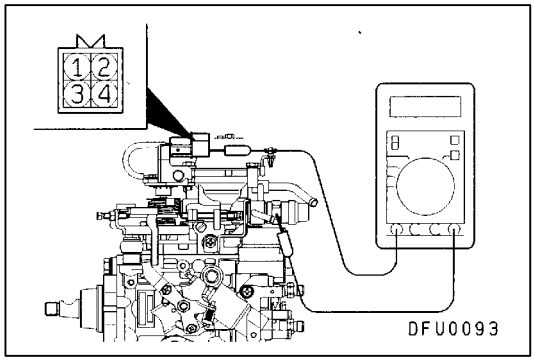

INJECTION TIMING CONTROL SOLENOID COIL RESISTANCE CHECK

Measure the resistance between the injection pump connector terminal No.4 (injection timing control solenoid terminal) and the injection pump body.

Standard value: 8 - 10 Ω (at 20 °C)

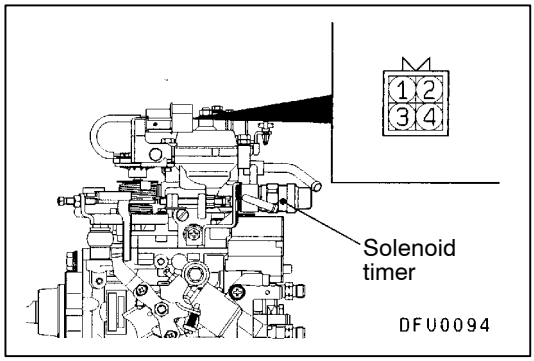

INJECTION TIMING CONTROL SOLENOID OPERATION CHECK

Check that operation sound of the injection timing control solenoid can be heard when connecting the injection pump connector terminal No.4 (injection timing control solenoid terminal) and the battery positive terminal.

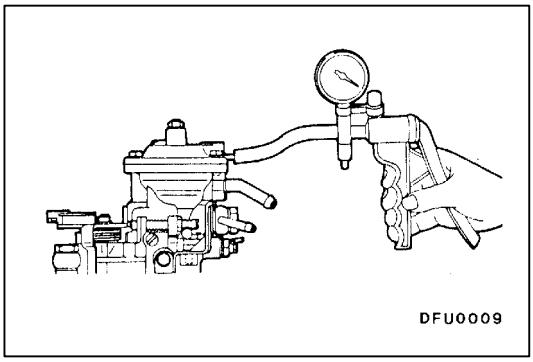

BOOST COMPENSATOR CHECK

1. Connect a hand pump (pressurization type) to the nipple of the boost compensator.
2. Apply 30 kPa of pressure and check to be sure that the pressure is maintained.

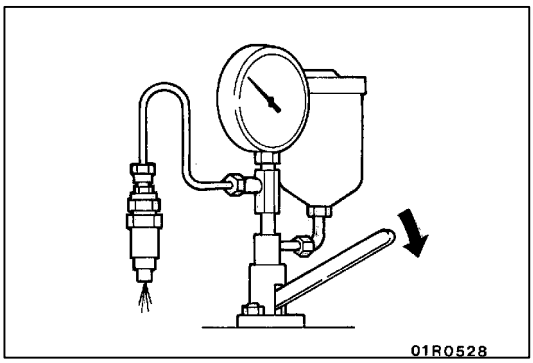

INJECTION NOZZLE CHECK AND ADJUSTMENT

Caution
Never touch the injection spray that is injected from the nozzle.

FUEL INJECTION INITIAL PRESSURE CHECK

1. Install the injection nozzle to a nozzle tester.
2. Move the lever of the nozzle tester 2 - 3 times to inject fuel and to bleed the air.
3. Gently press down the lever of the nozzle tester, and take a reading of the indication value on the pressure gauge at the point where the needle slowly rises and then suddenly drops.

   Standard value (Fuel injection initial pressure): 14,710 - 15,690 kPa

4. If the fuel injection initial pressure is outside the standard value, disassembly the nozzle holder to clean it, and then change the thickness of the shim to adjust the fuel injection initial pressure.

   NOTE
   (1) For disassembly, reassembly and adjustment of the nozzle holder, refer to P.13B-8.
   (2) There are 10 shims for adjustment, with thicknesses in the range of 0.10 - 0.80 mm.
   (3) When the shim thickness is increased by 0.1 mm, the fuel injection initial pressure increases by 2,350 kPa.

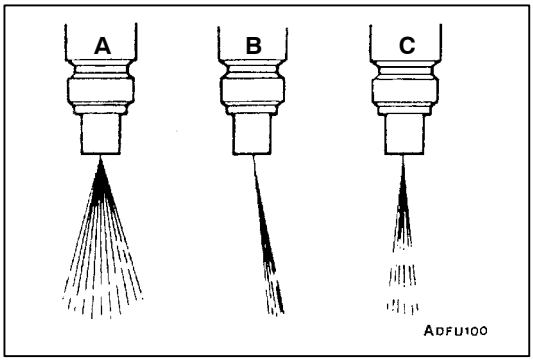

INJECTION SPRAY CONDITION CHECK

1. Move the lever of the nozzle tester rapidly (4 - 6 times per second) to eject the fuel continuously. Check to be sure that the injection spray comes out evenly in a cone shape (injection spray angle is 10 °). The injection spray patterns shown in the illustration at left are wrong.
   A. Injection angle is tool large
   B. Bias
   C. Intermittent fuel injection

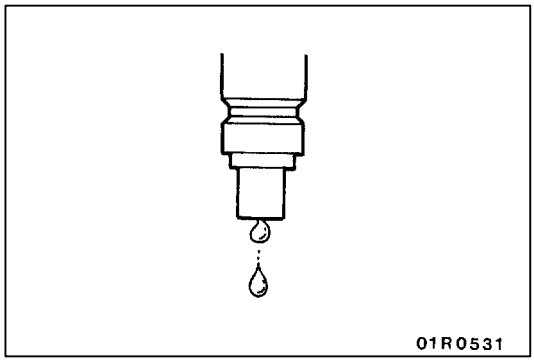

2. Check to be sure that no fuel drips after injection is completed.
3. If there are any drips, disassemble the nozzle, clean it and reinspect, or replace the nozzle.

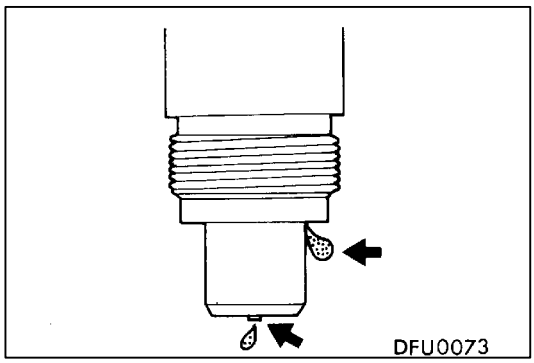

NOZZLE FUEL-TIGHT CHECK

1. Gently raise the lever of the nozzle tester until the pressure inside the nozzle (value displayed on pressure gauge) becomes 12,750 - 13,730 kPa, and after holding this pressure for approximately 10 seconds, check to be sure that there are no fuel leaks from the nozzle.
2. If there are any leaks, disassemble the injection nozzle, clean it and re-inspect, or replace the nozzle.

INJECTION NOZZLE

REMOVAL AND INSTALLATION

Pre-removal Operation
- Battery and Battery Tray Removal
- Air Pipe Removal (Refer to GROUP 15.)

Post-installation Operation
- Air Pipe Installation (Refer to GROUP 15.)
- Battery and Battery Tray Installation
- Accelerator Cable Adjustment (Refer to GROUP 17 - On-vehicle Service.)

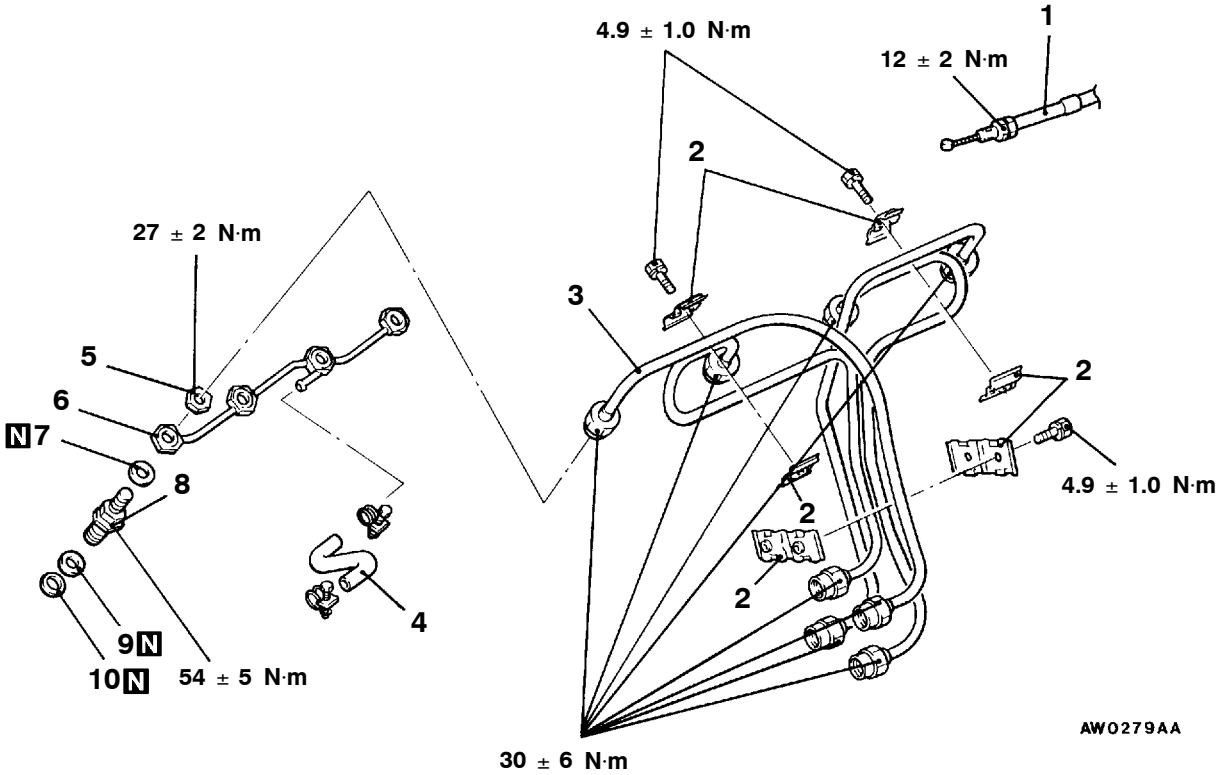

Removal steps

1. Accelerator cable connection
2. Injection pipe clamp
◀A▶ 3. Injection pipe
4. Fuel return hose
◀B▶ 5. Nut
◀B▶ 6. Fuel return pipe
7. Fuel return pipe gasket
◀C▶ 8. Injection nozzle assembly
▶A◀ 9. Holder gasket
▶A◀ 10. Nozzle gasket

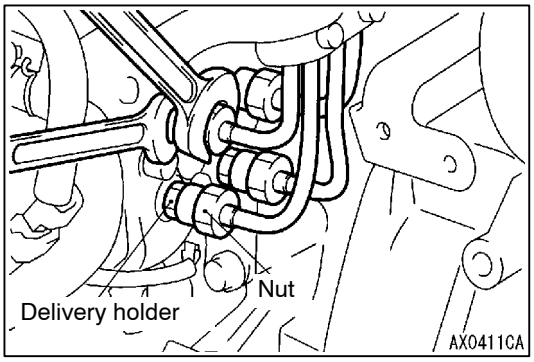

REMOVAL SERVICE POINTS

◀A▶ INJECTION PIPE DISCONNECTION

When loosening nuts at both ends of injection pipe, hold the delivery holder (for pump side) and the injection nozzle assembly (for nozzle side) with wrench and loosen nut.

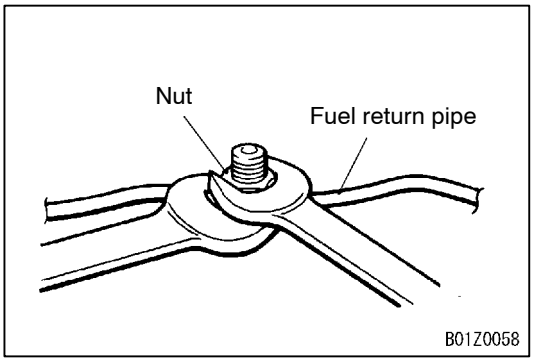

◀B▶ NUT/FUEL RETURN PIPE REMOVAL

1. While using a spanner or similar tool to hold the hexagonal nut of the fuel return pipe, remove the nut.

   Caution
   If an attempt is made to loosen the nut without first holding the fuel return pipe, the pipe may be broken or otherwise damaged.

2. Disconnect the fuel return pipe.

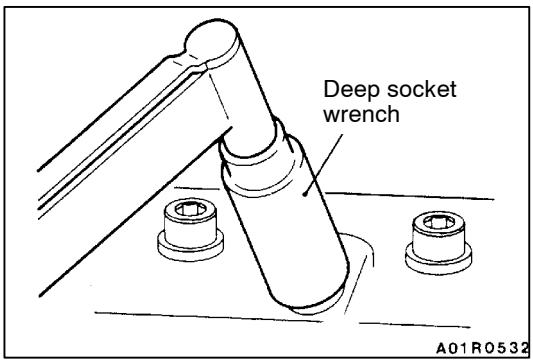

◀C▶ INJECTION NOZZLE ASSEMBLY REMOVAL

Using a deep socket wrench, remove the injection nozzle assembly.

Caution

1. **Make a mark on the removed injection nozzle assembly (the cylinder No.).**
2. **Use a cap to prevent foreign material, etc. from entering the injection nozzle hole.**

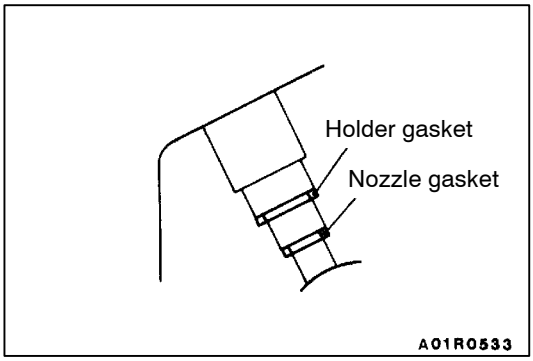

INSTALLATION SERVICE POINT

▶A◀ NOZZLE GASKET/HOLDER GASKET INSTALLATION

Clean the cylinder head's injection nozzle hole, and insert a new gasket.

DISASSEMBLY AND REASSEMBLY

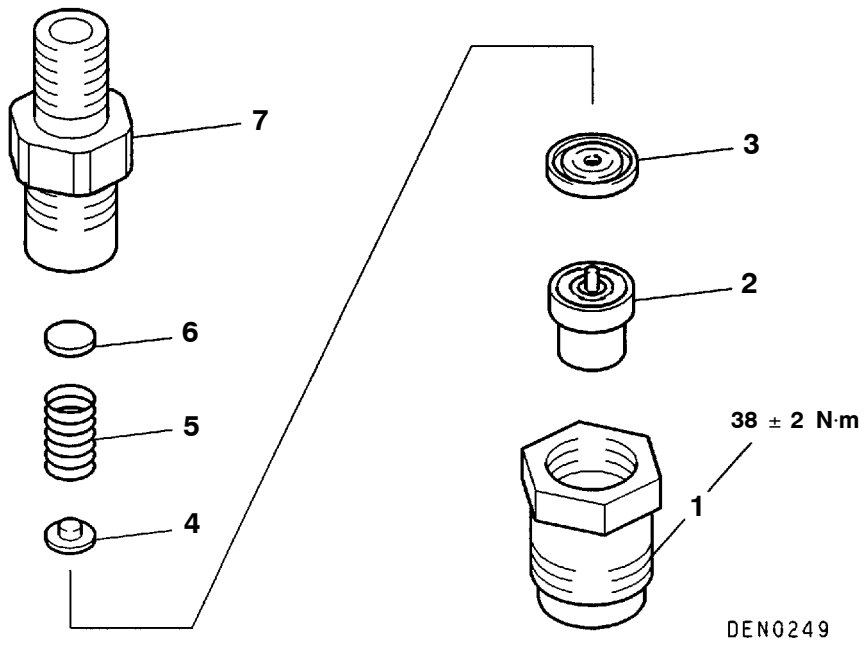

Disassembly steps

◀A▶ ▶A◀ 1. Retaining nut
2. Nozzle tip
3. Distance piece
4. Retaining pin
5. Pressure ring
6. Shim
7. Nozzle holder body

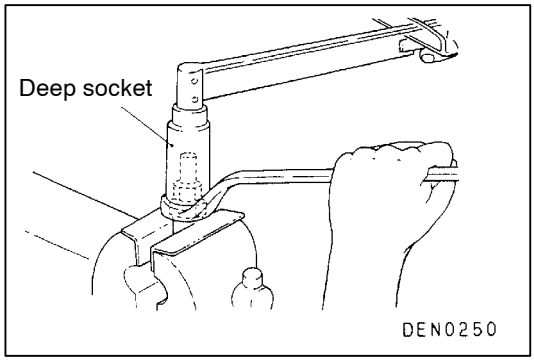

DISASSEMBLY SERVICE POINT

◀A▶ RETAINING NUT REMOVAL

1. Lightly clamp the retaining nut in a vise with soft jaws.
2. Hold the retaining nut with a box wrench, and loosen the nozzle holder body using a deep socket.

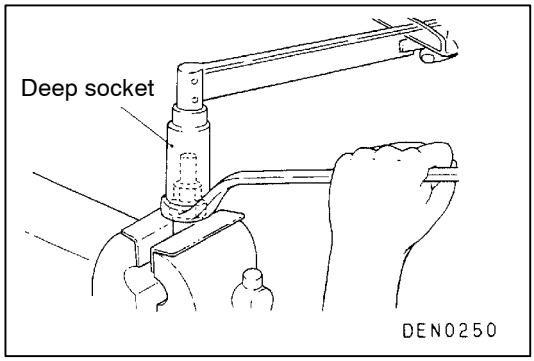

REASSEMBLY SERVICE POINT

▶A◀ RETAINING NUT INSTALLATION

1. Finger-tighten the nozzle holder body.
2. Lightly clamp the retaining nut in a vise with soft jaws.
3. While holding the retaining nut with a box wrench, tighten the nozzle holder body to the specified torque with a deep socket.

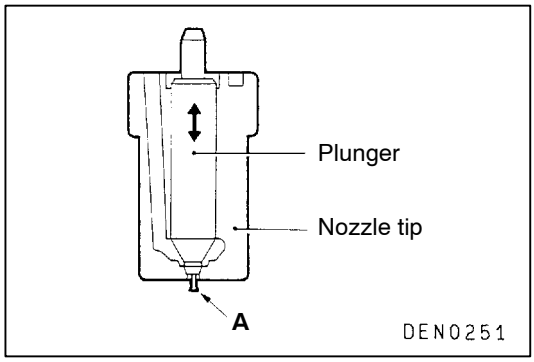

INSPECTION

NOZZLE TIP

1. Check the nozzle tip for carbon deposits. Scape off carbon deposits with a piece of wood and clean each part with petrol. After cleaning, keep parts submerged in diesel fuel. Take particular care to protect the nozzle tip needle valve from damage.
2. While the nozzle tip is submerged in diesel fuel, check that the needle valve slides smoothly.
   If the needle valve does not slide smoothly, replace the nozzle tip.
   When replacing the nozzle tip, completely wash off the anticorrosive oil from the new nozzle tip with clean diesel fuel before using it.
3. Check plunger tip “A” for deformation and breakage. If “A” is damaged or broken, replace it.

DISTANCE PIECE

Check the surface in contact with the nozzle holder body by using minium.

PRESSURE SPRING

Check spring for weakness and breakage.

INJECTION PUMP

REMOVAL AND INSTALLATION

Pre-removal Operation
- Engine Coolant Draining
  (Refer to GROUP 14 - On-vehicle Service.)
- Battery and Battery Tray Removal
- Timing Belt Removal (Refer to GROUP 11B.)
- Air Pipe Removal (Refer to GROUP 15.)

Post-installation Operation
- Air Pipe Installation (Refer to GROUP 15.)
- Timing Belt Installation (Refer to GROUP 11B.)
- Battery and Battery Tray Installation
- Engine Coolant Supplying
  (Refer to GROUP 14 - On-vehicle Service.)
- Injection Timing Adjustment
  (Refer to GROUP 11B - On-vehicle Service.)
- Accelerator Cable Adjustment
  (Refer to GROUP 17 - On-vehicle Service.)

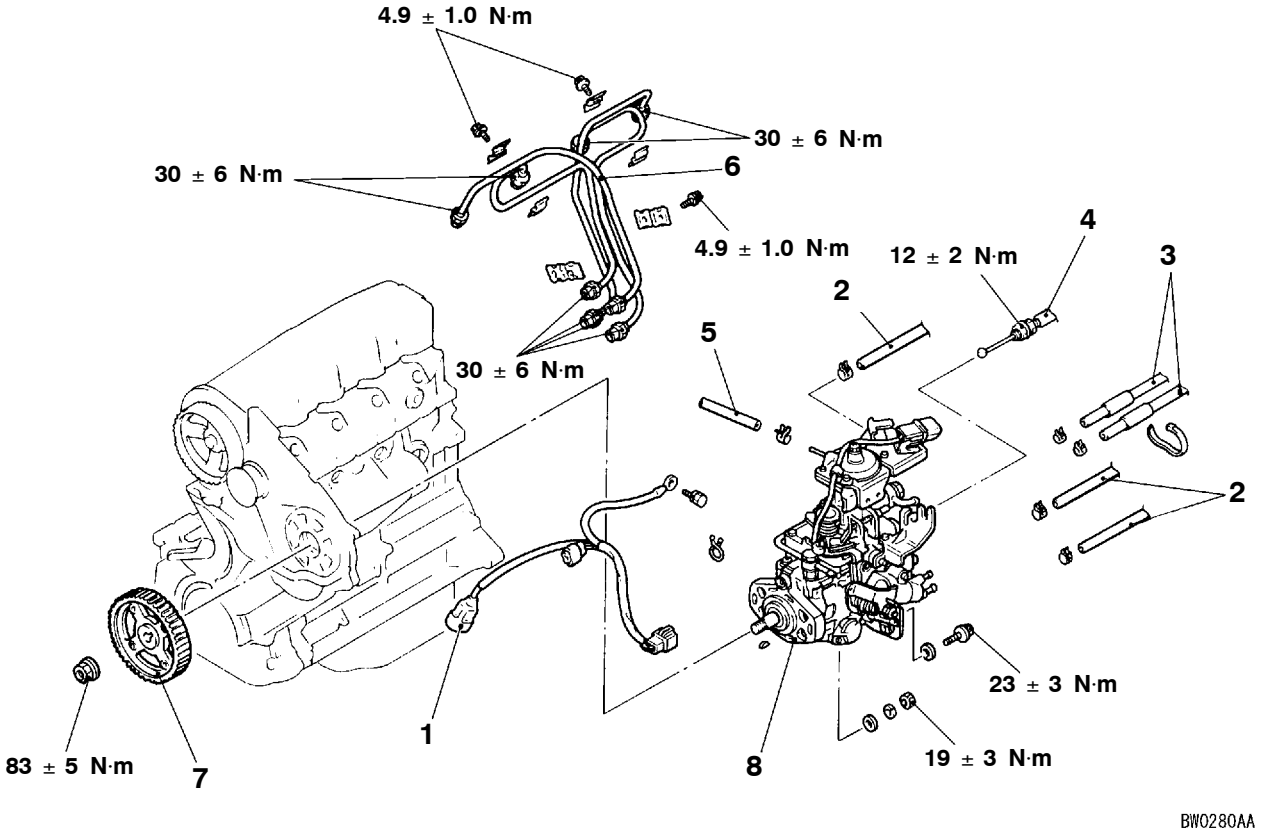

Removal steps

1. Fuel injection pump wiring harness
2. Water hoses connection
3. Fuel hoses connection
4. Accelerator cable connection
5. Boost hose connection
6. Fuel injection pipe
7. Fuel injection pump sprocket
8. Fuel injection pump

◀A▶
◀B▶

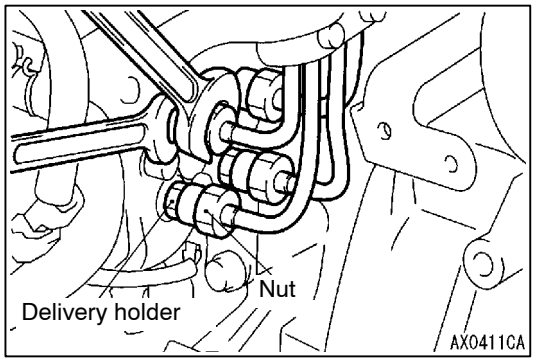

REMOVAL SERVICE POINTS

◀A▶ INJECTION PIPE REMOVAL

Loosen the nuts at the end of the injection pipe with the delivery holder (for pump side) and injection nozzle assembly (for nozzle side) retained by a spanner, etc.

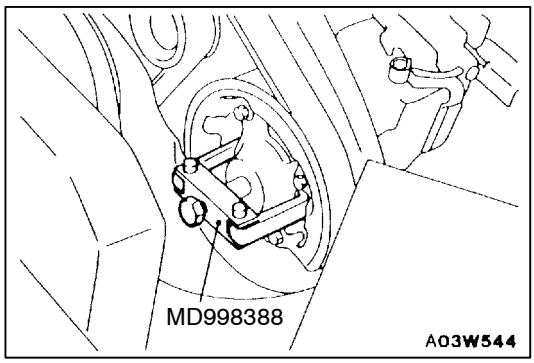

◀B▶ FUEL INJECTION PUMP SPROCKET REMOVAL

Remove sprocket installing nut and remove sprocket from pump drive shaft with special tool.

Caution

1. **Do not hit pump drive shaft with hammer, etc.**
2. **When holding injection pump, do not allow to dangle by holding accelerator lever or fast idle lever. Do not remove these levers. Removal will cause injection pump malfunction.**

NOTES