FOREWORD

To assist you in your service activities, this manual explains the main characteristics of the new Camry Hybrid model in particular providing a technical explanation of the construction and operation of new mechanism and new technology used.

Applicable models: AHV40

This manual is divided into 3 sections.

1. **New Model Outline** - Explanation of the product to give a general understanding of its features.
2. **Technical Description** - Technical explanation of the construction and operation of each new system and component.
3. **Appendix** - Major technical specifications of the vehicle.

CAUTION, NOTICE, *REFERENCE* and **NOTE** are used in the following ways:

CAUTION	A potentially hazardous situation which could result in injury if instructions are ignored.
NOTICE	Damage to the vehicle or components may occur if instructions are ignored.
REFERENCE	Explains the theory behind mechanisms and techniques.
NOTE	Notes or comments not included under the above 3 titles.

For detailed service specifications and repair procedures, refer to the following Repair Manuals:

Manual Name	Pub. No.
● 2007 CAMRY Hybrid Vehicle Repair Manual	RM02H0U
● 2007 CAMRY Hybrid Vehicle Electrical Wiring Diagram	EM02H0U

All information contained herein is the most up-to-date at the time of publication. We reserve the right to make changes without prior notice.

TOYOTA MOTOR CORPORATION

© **2006 TOYOTA MOTOR CORPORATION**
All rights reserved. This book may not be reproduced or copied, in whole or in part, without the written permission of Toyota Motor Corporation.
First Printing: Mar. 06, 2006 01-060306-00

Downloaded from www.Manualslib.com manuals search engine

THS II (TOYOTA HYBRID SYSTEM II)

■DESCRIPTION

1. General

Under the “Hybrid Synergy Drive” concept, the ’07 Camry Hybrid model uses THS II (Toyota Hybrid System II). This system optimally effects cooperative control of a 2AZ-FXE engine and a high-speed, high-output MG2 through a hybrid transaxle that provides excellent transmission performance.
Furthermore, it uses a variable-voltage system consisting of a high-output HV battery with a nominal voltage of DC 244.8 V, and a boost converter that boosts the operating voltage of the system to a maximum voltage of DC 650 V.

2. Driving Performance

This system uses a variable-voltage system that consists of a boost converter to boost the operating voltage to a maximum voltage of DC 650 V. It is able to drive the MG1 (Motor Generator No.1) and MG2 at a high voltage, and minimizes the electrical loss associated with the supply of electric power at a smaller current. Thus, it is able to operate the MG1 and MG2 at high speeds and high outputs.
A high driving force is achieved through the synergy effect of the high-speed, high-output MG2 and the high-efficiency 2AZ-FXE engine.

3. Fuel Economy Performance

- By optimizing the internal construction of MG2, this system realizes a high level of regenerative capability, thus realizing a high level of fuel economy performance.
- This system stops the engine while the vehicle is idling, and stops the engine as much as possible under conditions in which the operating efficiency of the engine is poor, allowing the vehicle to operate using only MG2. Under the conditions in which the operating efficiency of the engine is favorable, the engine operates to drive the vehicle using MG1 while generating electricity. Thus, this system effects the input-output control of driving energy in a highly efficient manner to realize a high level of fuel economy.

Downloaded from www.Manualslib.com manuals search engine

■FEATURES OF THS II

1. General

- The THS II offers the following representative features:
  - Uses a variable-voltage system in which a boost converter boosts the operating voltage of the system to a maximum voltage of DC 650 V and an inverter converts the direct current into an alternating current, which supplies the system voltage to MG1 and MG2.
  - A motor speed reduction planetary gear unit, whose purpose is to reduce motor speed, is used to enable the high-speed, high-output MG2 to adapt optimally to the power split planetary gear unit in the hybrid transaxle.
- The THS II consists primarily of the following components:

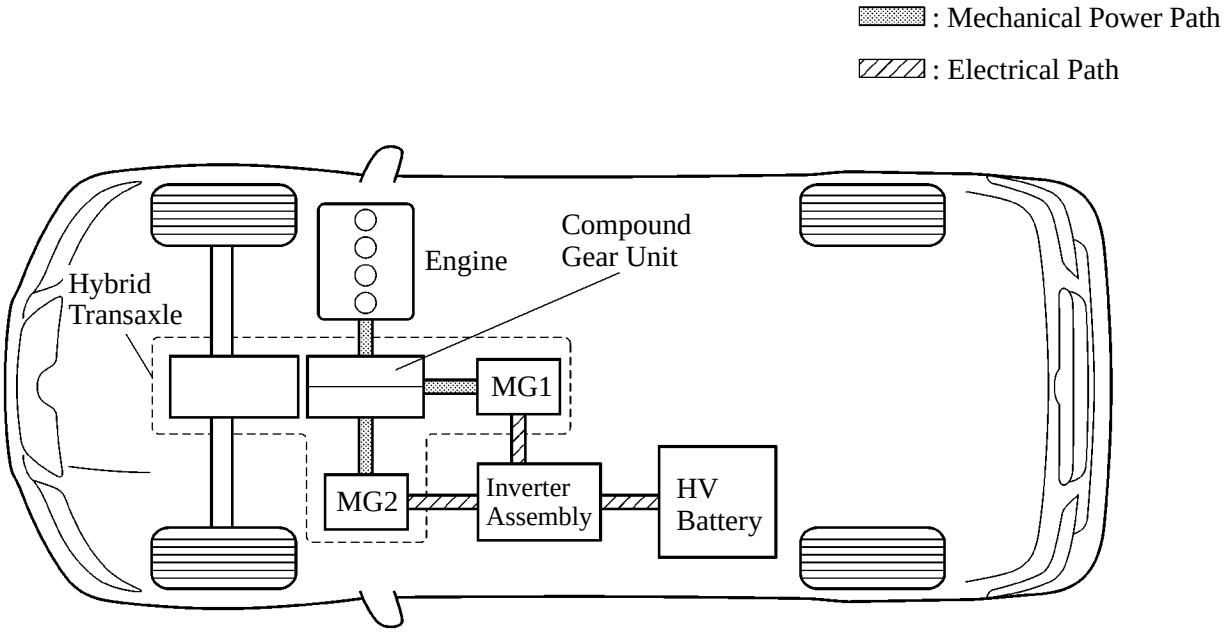

2. Variable-voltage System

In the THS II of the ’07 Camry Hybrid model, a boost converter is used inside the inverter assembly. The boost converter boosts the system operating voltage to a maximum voltage of DC 650 V and the inverter converts direct current into alternating current, in order to drive MG1 and MG2 at a high voltage as well as minimize the electrical loss associated with the electric power supply at a smaller current. Thus, MG1 and MG2 can be operated at high speeds and high output.

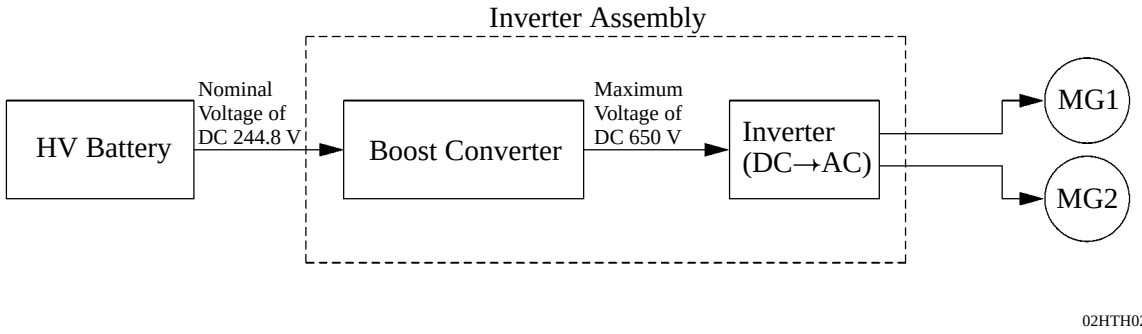

Downloaded from www.Manualslib.com manuals search engine

3. Clutch-Less System

A clutch-less system is used to mechanically link the front wheels and MG2 via gears. To disengage the motive force in the neutral position, the shift position sensor outputs an N position signal to turn OFF all the power transistors in the inverter (which controls MG1 and MG2). As a result, the operation of MG1 and MG2 shuts down, thus rendering the motive force at the wheels to zero.

4. Hybrid Transaxle

- This system drives the vehicle by combining the motive forces of the engine and the MG2 in an optimal manner in accordance with the driving conditions of the vehicle. In this system, the engine power forms the basis. The power split planetary gear unit in the hybrid transaxle splits the engine power two ways: one to drive the wheels, and the other to drive MG1, so that it can function as a generator.
- This hybrid transaxle consists primarily of MG1, MG2, a compound gear unit (which consists of a motor speed reduction planetary gear unit and a power split planetary gear unit), a counter gear unit, and a differential gear unit.
- The engine, MG1 and MG2 are mechanically joined via the compound gear unit.
- The compound gear unit contains a motor speed reduction planetary gear unit and a power split planetary gear unit. The motor speed reduction planetary gear unit reduces the rotational speed of MG2, and the power split planetary gear unit splits the motive force of the engine two ways: one to drive the wheels, and the other to drive MG1, so that it can function as a generator.
- In the motor speed reduction planetary gear unit, the sun gear is coupled to the output shaft of MG2, and the carrier is fixed. Furthermore, the compound gear unit uses a compound gear, in which two planetary ring gears, a counter drive gear, and a parking gear are integrated.

For details, refer to P311 Hybrid Transaxle on page CH-2.

▶ Image Diagram ◀

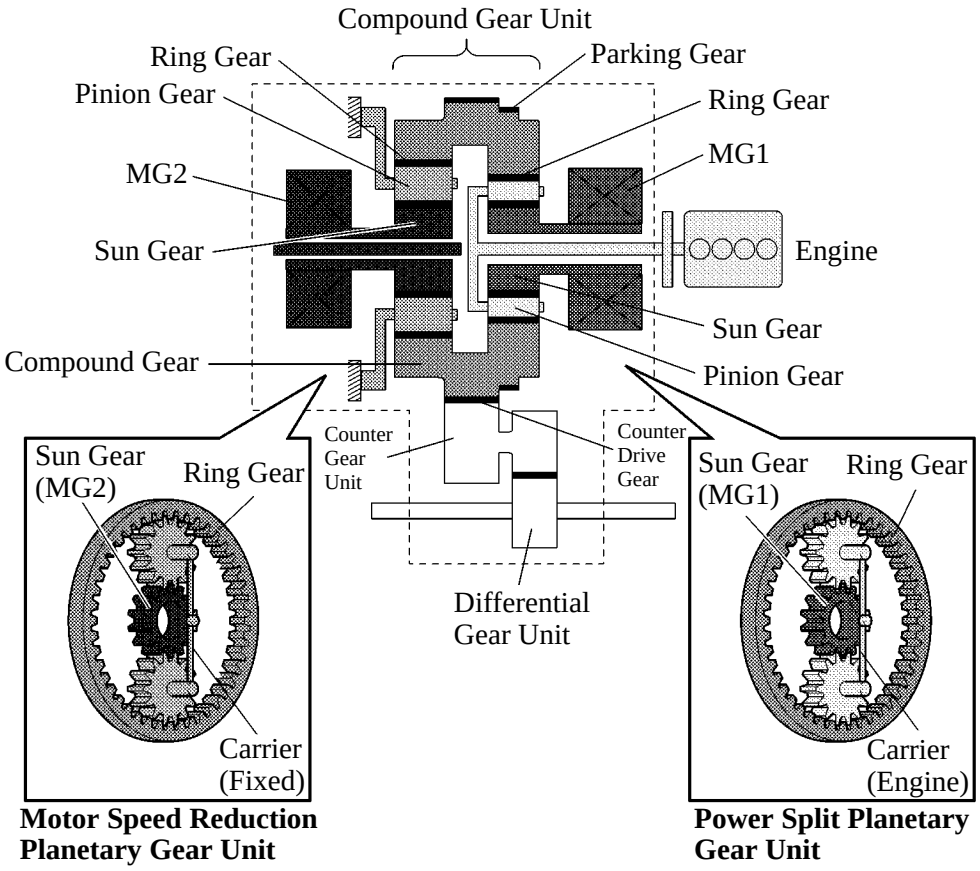

02HTH19Y

Downloaded from www.Manualslib.com manuals search engine

5. Link-Less

The ETCS-i (Electronic Throttle Control System-intelligent) is used. This is a link-less system that does not use an accelerator cable. Instead, it uses an accelerator pedal position sensor and a throttle position sensor to detect the accelerator pedal position and the throttle position.
The THS ECU calculates the target engine speed and the required engine motive force in accordance with the signals provided by the accelerator pedal position sensor, vehicle driving conditions, and the SOC (state of charge) of the battery. Based on the results of this calculation, the THS ECU optimally controls the throttle valve. For details, refer to 2AZ-FXE engine on page EG-43.

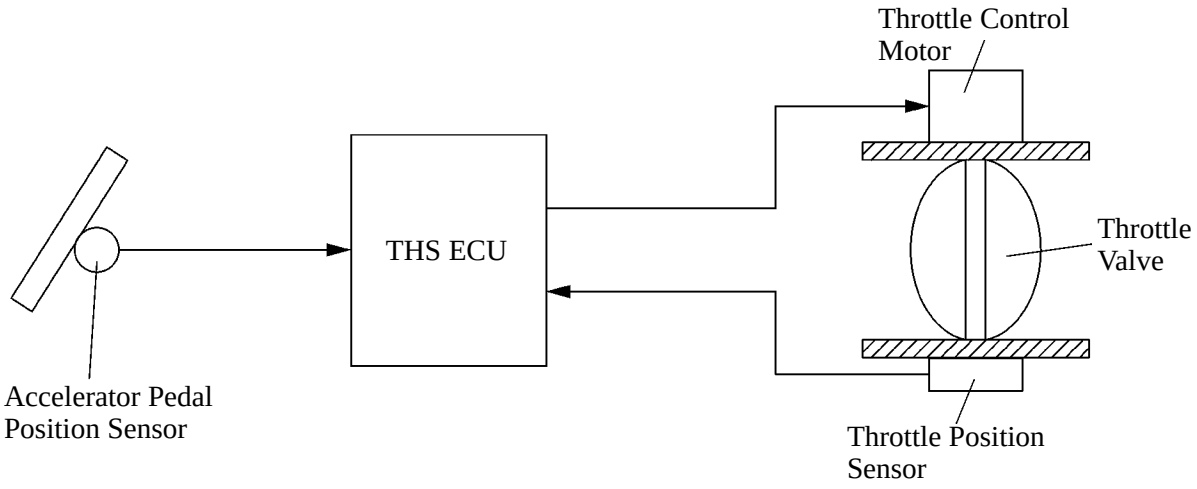

277TH11

6. Regenerative Brake

The regenerative brake function operates MG2 as a generator while the vehicle is decelerating or braking and stores this electrical energy in the HV battery.
For details, refer to Outline of Regenerative Brake Cooperative Control Function in the Brake Control System, on page CH-28.

Downloaded from www.Manualslib.com manuals search engine

7. Basic Operation

This system generates a motive force in combination with the engine, MG1 and MG2 in accordance with the driving conditions. Representative examples of the various combinations are described below.

Starting (Drive by MG2)

Supply of electrical power from the HV battery to MG2 provides force to drive the front wheels.

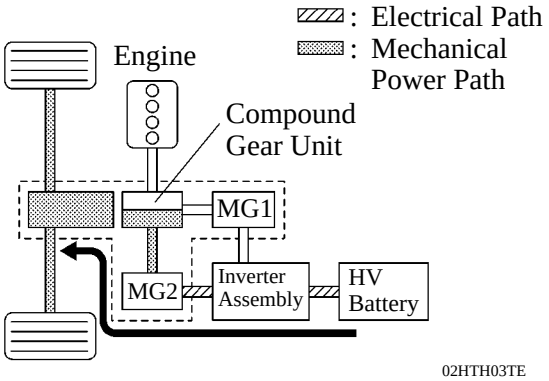

02HTH03TE

During Acceleration with Engine

While the front wheels are being driven by the engine via the planetary gears, MG1 is driven by the engine via the planetary gears, in order to supply the generated electricity to MG2.

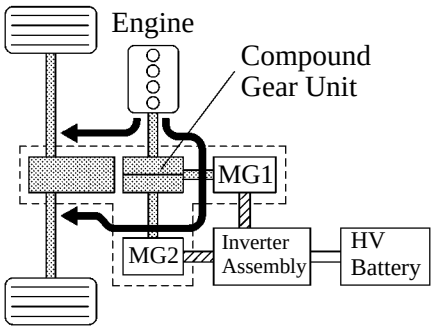

02HTH04TE

Charge The HV Battery

MG1 is rotated by the engine via the planetary gears, in order to charge the HV battery.

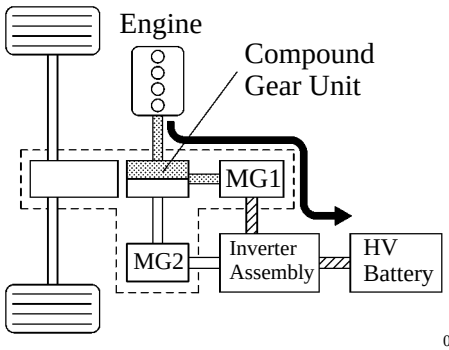

02HTH05TE

During Deceleration Driving

When the vehicle is decelerating, kinetic energy from the front wheels is recovered and converted into electrical energy and used to recharge the HV battery by means of MG2.

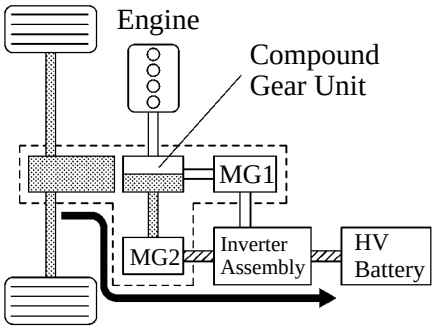

02HTH06TE

Downloaded from www.Manualslib.com manuals search engine

■ SYSTEM DIAGRAM

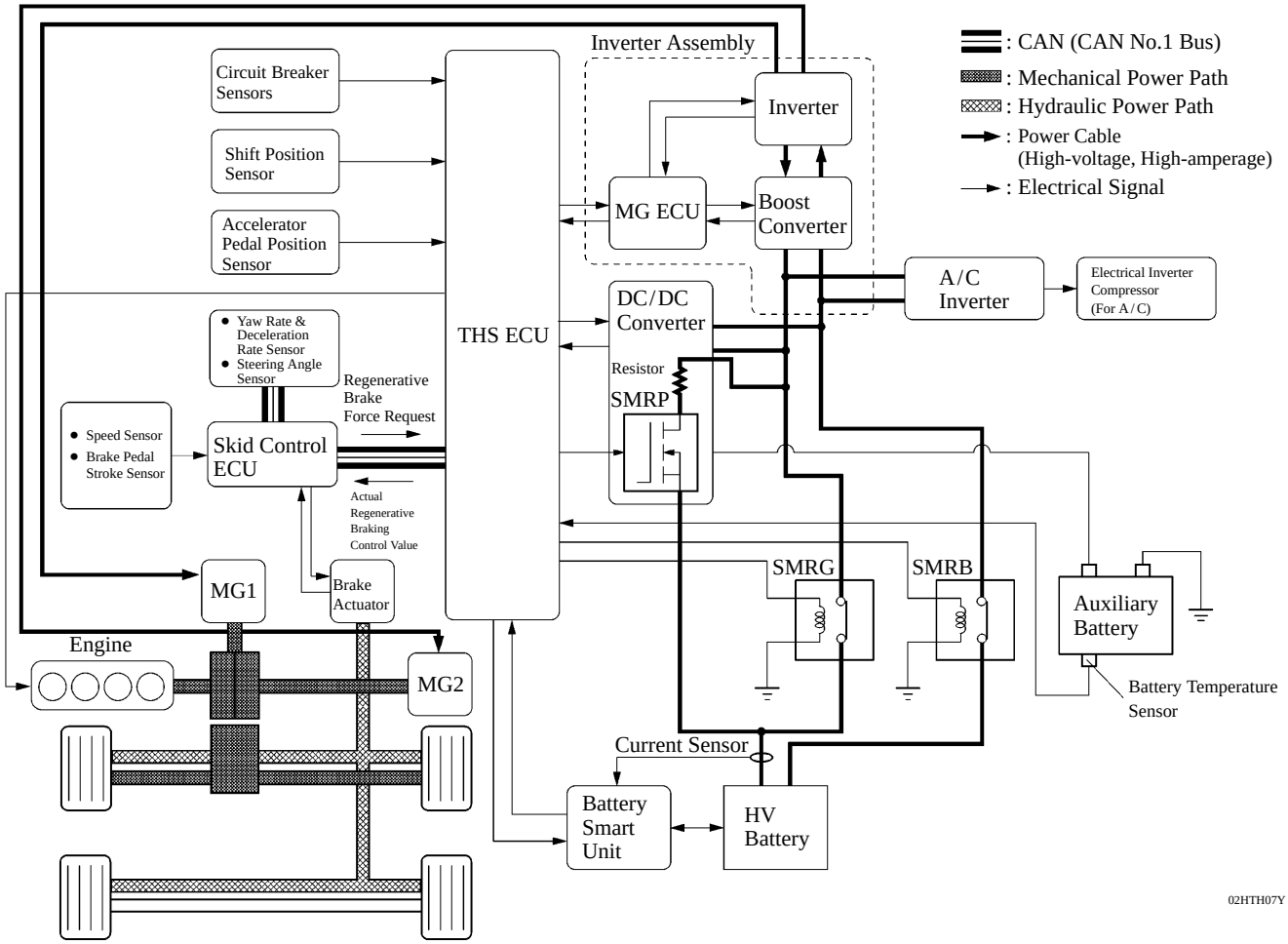

Downloaded from www.Manualslib.com manuals search engine

■LAYOUT OF MAIN COMPONENTS

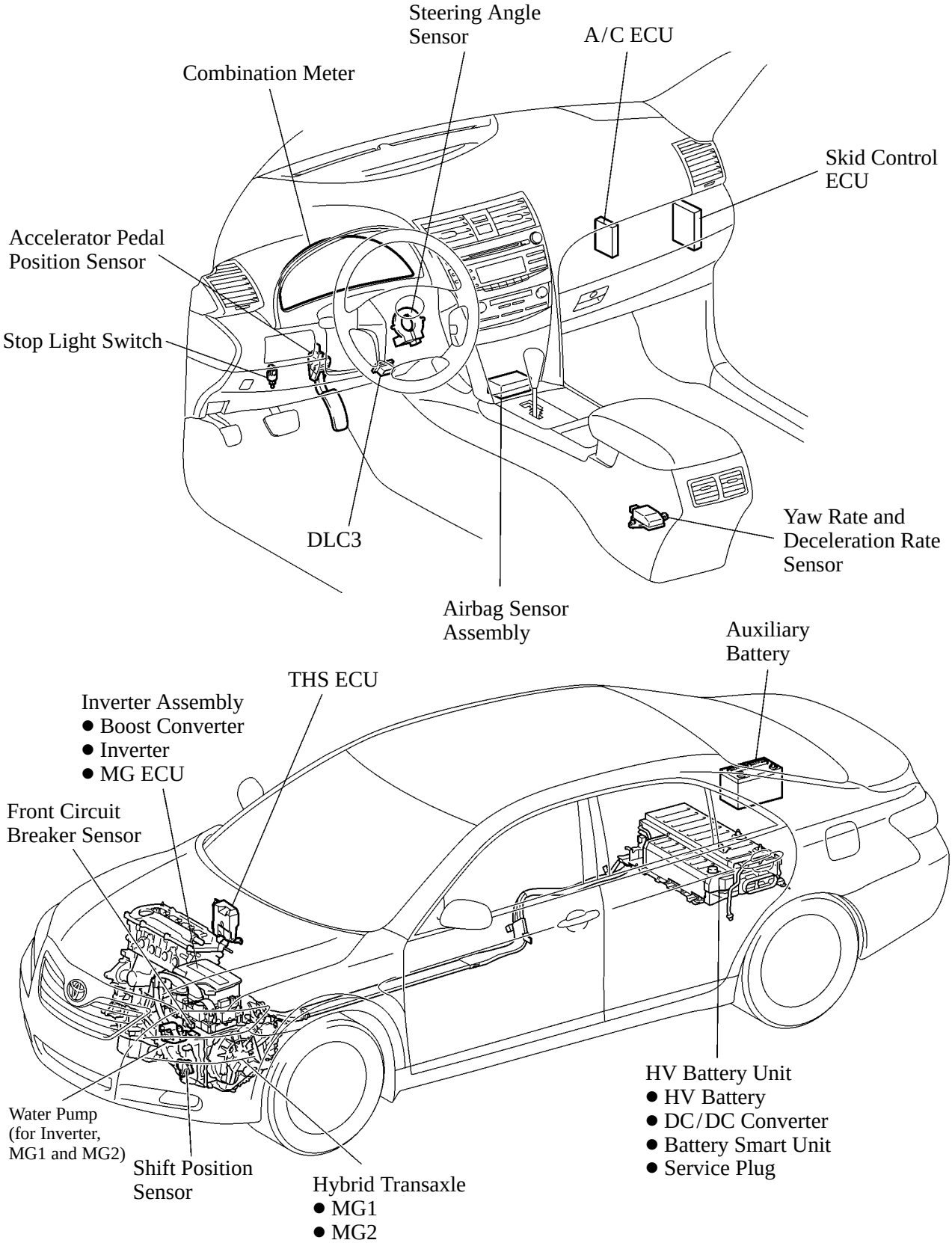

02HTH08TE

Downloaded from www.Manualslib.com manuals search engine

■FUNCTION OF MAIN COMPONENTS

Item			Outline
Hybrid Transaxle	MG1		● MG1, which is driven by the engine, generates high-voltage electricity in order to operate MG2 or charge the HV battery. Also, it functions as a starter to start the engine. ● MG1 operates so that the gear ratio of the power split planetary gear unit will optimally suit the driving conditions of the vehicle.
	MG2		● Driven by electrical power from MG1 or HV battery, and generates motive force for the front wheels. ● During braking, or when the accelerator pedal is not depressed, it generates electricity to recharge the HV battery (Regenerative brake control).
	Compound Gear Unit	Power Split Planetary Gear	Distributes the engine's drive force as appropriate to directly drive the vehicle as well as the generator.
		Motor Speed Reduction Planetary Gear	Located between MG2 and the power split planetary gear, the motor speed reduction planetary gear reduces the rotational speed of MG2 in accordance with the characteristics of the planetary gear, in order to increase torque.
HV Battery Unit	HV Battery		● Supplies electrical power to the MG1 and MG2 in accordance with the driving conditions of the vehicle. ● Is recharged by the MG1 and MG2 in accordance with the SOC and the driving conditions of the vehicle.
	DC/DC Converter		Drops the maximum voltage of DC 244.8 V into DC12 V in order to supply electricity to body electrical components, as well as to recharge the auxiliary battery (DC 12 V).
	Battery Smart Unit		Monitors the conditions of the HV battery and transmits them to the THS ECU.
	Service Plug		Shuts off the high-voltage circuit of the HV battery when this plug is removed for vehicle inspection or maintenance.
Inverter Assembly			A device that converts the high-voltage DC (HV battery) into AC (MG1 and MG2) and vice versa (Converts AC into DC).
	Boost Converter		Boosts the maximum voltage of the HV battery from DC 244.8 V to DC 650 V and vice versa (drops DC 650 V to DC 244.8 V).
	MG ECU		Controls the inverter and boost converter in accordance with the signals received from the THS ECU, thus driving MG1 or MG2 or causing them to generate electricity.
THS ECU			Effects comprehensive control of the THS II. ● Information from each sensor as well as from the ECU (battery smart unit, skid control ECU, and EPS ECU) is received, and based on this the required torque and output power is calculated. The THS ECU sends the calculated result to the inverter assembly and skid control ECU. ● Activates the ETCS-i (Electronic Throttle Control System-intelligent) in accordance with the target engine speed and required engine motive force. ● Monitors the charging condition of the HV battery. ● Controls the cooling fan of the HV battery and cooling fan of the DC/DC converter. ● Controls the DC/DC converter.

(Continued)

Downloaded from www.Manualslib.com manuals search engine

Item	Outline
Skid Control ECU	● During braking, it calculates the regenerative brake force that is required for control and transmits it to the THS ECU. ● Calculates the motive force that is required for control during the operation of TRAC or VSC and transmits it to the THS ECU.
Accelerator Pedal Position Sensor	Converts the accelerator pedal position into an electrical signal and outputs it to the THS ECU.
Shift Position Sensor	Converts the shift position into an electrical signal and outputs it to the THS ECU.
SMR (System Main Relay)	Connects and disconnects the high-voltage power circuit between the HV battery and inverter assembly, through the use of a signal from the THS ECU.
Interlock Switch (for Inverter Cover and Service Plug)	Verifies that the cover of both the inverter and the service plug have been installed.
Circuit Breaker Sensor	Detects the impact that is applied to the vehicle during a collision and transmits a signal to the THS ECU. Upon receiving this signal, the THS ECU operates the SMR (System Main Relay) to shut down the power supply.
Auxiliary Battery	Charged by the HV battery module power via the DC/DC converter. Supplies power to the audio system, air conditioning system (except the electric inverter compressor) and the ECUs.

Downloaded from www.Manualslib.com manuals search engine

■SYSTEM OPERATION

1. General

- The THS II uses two sources of motive force, the engine and MG2, and uses MG1 as a generator. The system optimally combines these forces in accordance with the various driving conditions.
- The THS ECU constantly monitors the SOC condition, the HV battery temperature, the coolant temperature, and the electrical load condition. If any one of the monitored items fails to satisfy the requirements when the READY indicator is ON and the shift lever is in the “P” position, or the vehicle is driven in reverse, the THS ECU to starts the engine to drive MG1, and then charges the HV battery.
- The THS II drives the vehicle by optimally combining the operations of the engine, MG1, and MG2 in accordance with the driving conditions listed below.
  The vehicle conditions listed below are examples of typical vehicle running conditions.

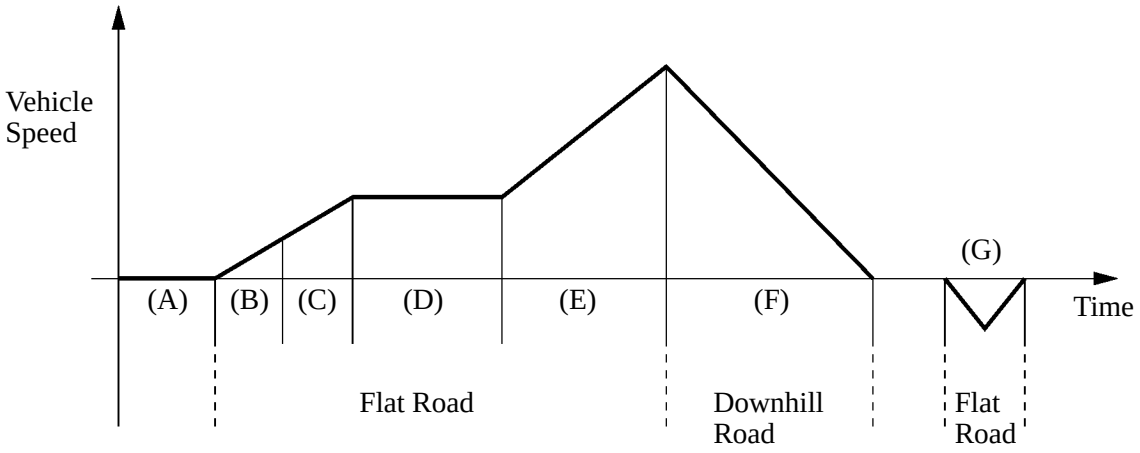

Driving Condition

02DTH85Y

(A): READY ON State
(B): Starting with MG2 (See Page TH-13)
(C): Running with MG2 and Engine (See Page TH-14)
(D): During Low Load and Constant-Speed Cruising (See Page TH-15)
(E): During Full Throttle Acceleration (See Page TH-16)
(F): During Deceleration Driving (See Page TH-17)
(G): During Reverse Driving (See Page TH-18)

Downloaded from www.Manualslib.com manuals search engine

2. How to Read a Nomographic Chart

- The nomographic chart below gives a visual representation of the planetary gear's rotational direction, rotational speed, and torque balance.
- In the nomographic chart, a straight line is used to represent the relationship between the rotational speeds of the 3 gears in the power split planetary gear unit. The rotational speed of each gear is indicated by the distance from the 0 rpm point. Due to the structure of the power split planetary gear unit, the relationship between the rotational speeds of the 3 gears is always expressed by a straight line.
- The relationship between the gear rotation directions and the torque that acts on each gear is as described below.
  Due to the structure of this hybrid transaxle, the MG2 motive force acts on the ring gear via the motor speed reduction planetary gear unit. The illustrations of the power split planetary gear unit operation on the following pages, represent the rotational direction, rotational speed and torque condition that act on the ring gear.
- The nomographic charts and the illustrations of the power split planetary gear unit operation for each vehicle running condition shown on the following pages represent one situation as an example.

▶ Nomographic Chart ◀

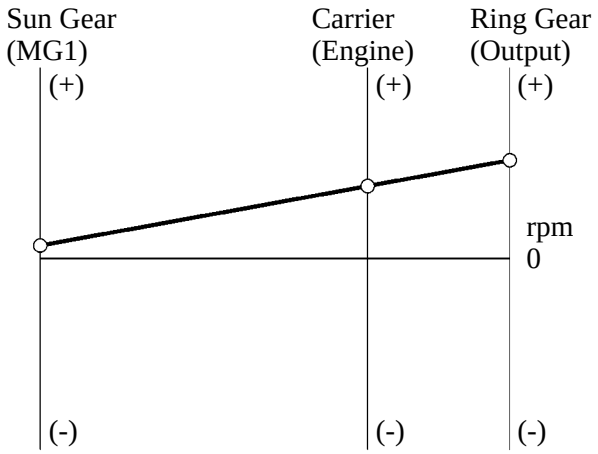

02DTH90Y

▶ Power Split Planetary Gear Unit Operation ◀

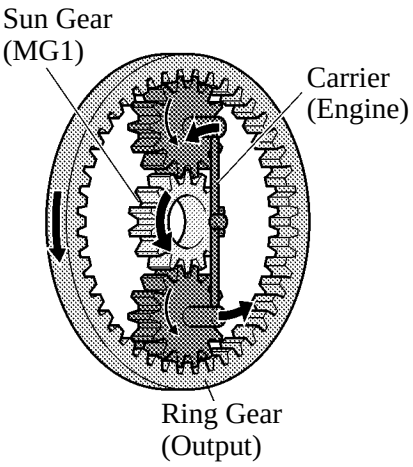

02DTH97Y

▶ Condition of Power Split Planetary Gear Unit ◀

	Sun Gear (MG1)	Carrier (Engine)	Ring Gear (Output)
Rotational Direction	+	+	+
Torque Condition	-	+	-

Normal Driving (During Low Load and Constant-speed Cruising)

Downloaded from www.Manualslib.com manuals search engine

3. Starting with MG2/(B)

- When the vehicle is started off, the vehicle operates powered only by the MG2.

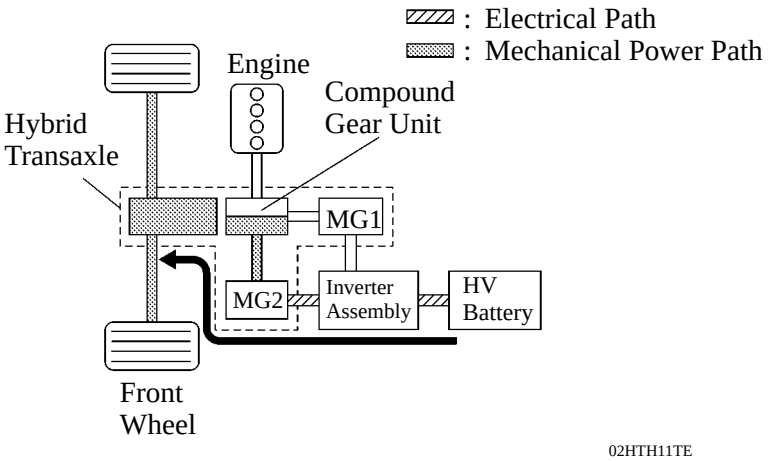

- When the vehicle starts off under normal conditions, it runs using the motive force of MG2. While running under this condition, the rotational speed of the carrier is 0 rpm due to the engine being inactive. In addition, since MG1 does not generate any torque, no torque acts on the sun gear. However, the sun gear rotates freely in the (-) direction balancing the rotating ring gear (Output).

▶ Nomographic Chart ◀

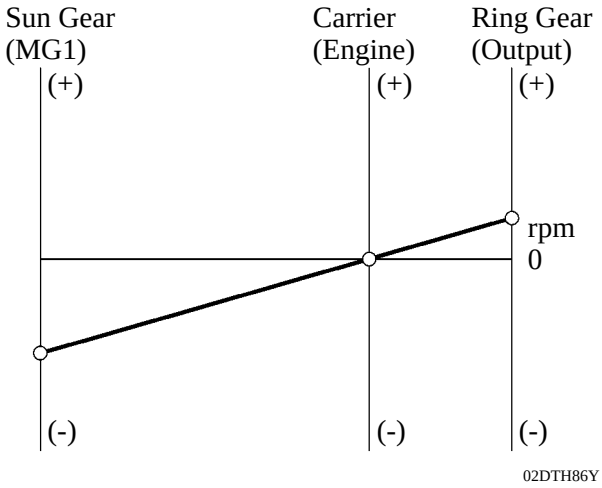

▶ Power Split Planetary Gear Unit Operation ◀

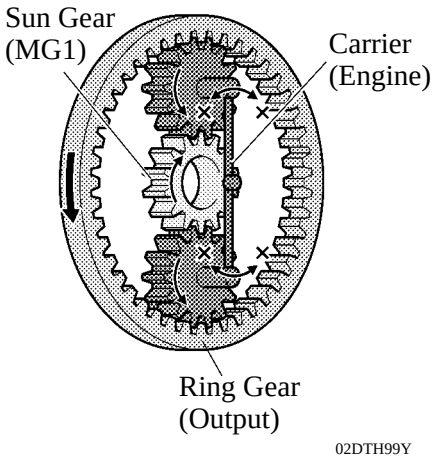

▶ Condition of Power Split Planetary Gear Unit ◀

	Sun Gear (MG1)	Carrier (Engine)	Ring Gear (Output)
Rotational Direction	-	0	+
Torque Condition	0	0	+

Downloaded from www.Manualslib.com manuals search engine

4. Running with MG2 and Engine/(C)

- If the required drive torque increases when running with MG2 only, MG1 is activated to start the engine. In addition, if any one of the items monitored by the THS ECU such as the SOC condition, the battery temperature, the engine coolant temperature or the electrical load condition deviates from the specified level, MG1 is activated to start the engine.

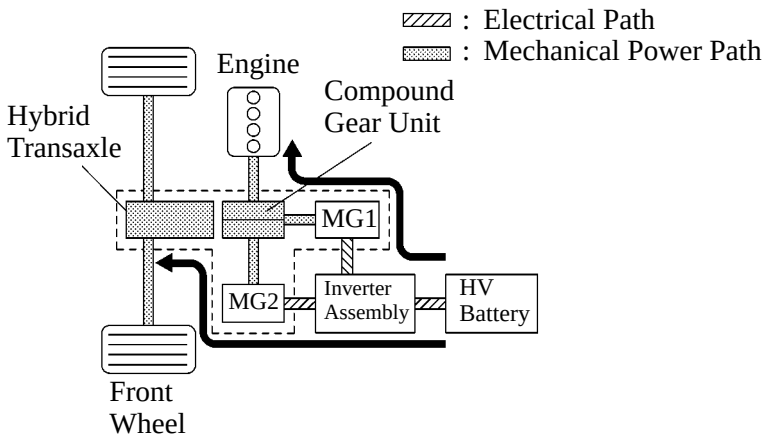

02HTH12TE

- Only when running with MG2, when the engine starts with MG1, the torque acts on the sun gear (MG1) in the (+) direction, the carrier (Engine) rotates in the (+) direction in reaction to the torque transmitted by the sun gear. The ring gear rotates in the (+) direction in reaction to the carrier rotation.
- The nomographic charts and the illustrations of the power split planetary gear unit operation for each vehicle running condition shown on the following pages represent one situation as an example.

▶ Nomographic Chart ◀

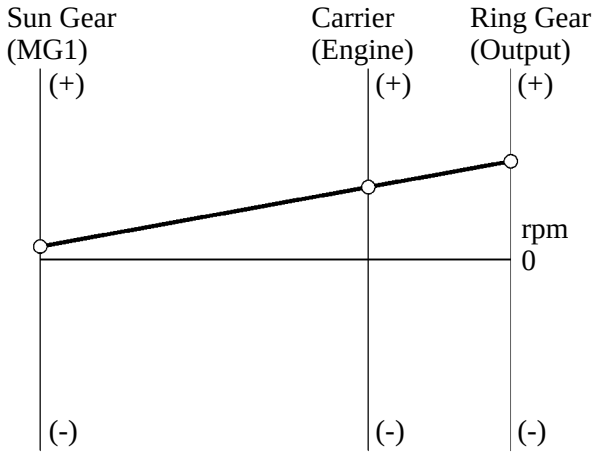

02DTH90Y

▶ Power Split Planetary Gear Unit Operation ◀

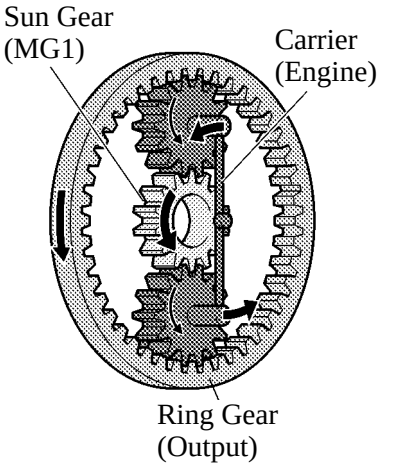

02DTH97Y

▶ Condition of Power Split Planetary Gear Unit ◀

	Sun Gear (MG1)	Carrier (Engine)	Ring Gear (Output)
Rotational Direction	+	+	+
Torque Condition	+	-	+

Downloaded from www.Manualslib.com manuals search engine

5. During Low Load and Constant-Speed Cruising/(D)

- When the vehicle is running under low load and constant-speed cruising conditions, the motive force of the engine is transmitted by the planetary gears. Some of this motive force is output directly, and the remaining motive force is used for generating electricity through MG1. Through the use of the electrical path of an inverter, this electrical power is transmitted to MG2 to be output as the motive force of MG2. If the SOC level of the HV battery is low, it is charged by MG1 driven by the engine.

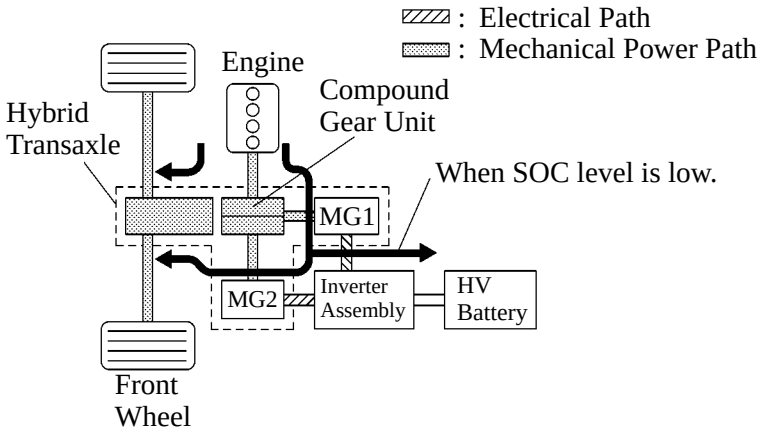

02HTH14TE

- The following represents an example of the power split planetary gear unit operation under normal driving conditions. The sun gear, carrier and ring gear rotate in the (+) direction. The torque from the engine acts on the carrier (Engine) in the (+) direction, causing the sun gear and ring gear to react in the (-) direction. MG1 generates electricity by harnessing the (-) torque that acts on the sun gear.
- The nomographic charts and the illustrations of the power split planetary gear unit operation for each vehicle running condition shown on the following pages represent one situation as an example.

▶ Nomographic Chart ◀

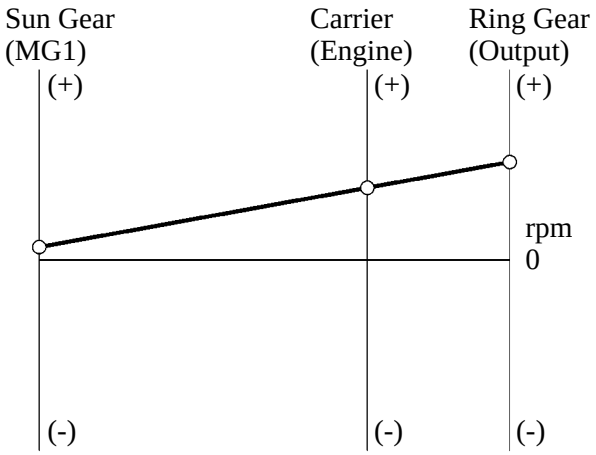

02DTH90Y

▶ Power Split Planetary Gear Unit Operation ◀

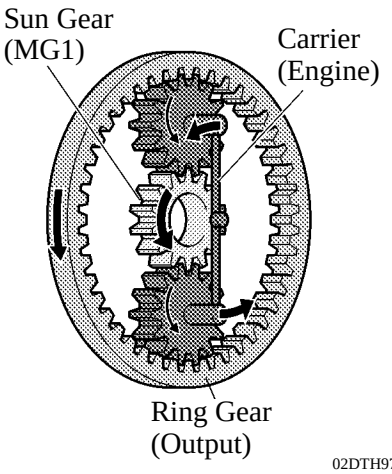

02DTH97Y

▶ Condition of Power Split Planetary Gear Unit ◀

	Sun Gear (MG1)	Carrier (Engine)	Ring Gear (Output)
Rotational Direction	+	+	+
Torque Condition	-	+	-

Downloaded from www.Manualslib.com manuals search engine

6. During Full Throttle Acceleration/(E)

- When the vehicle driving condition changes from low load cruising to full-throttle acceleration, the system supplements the motive force of MG2 with electrical power from the HV battery.

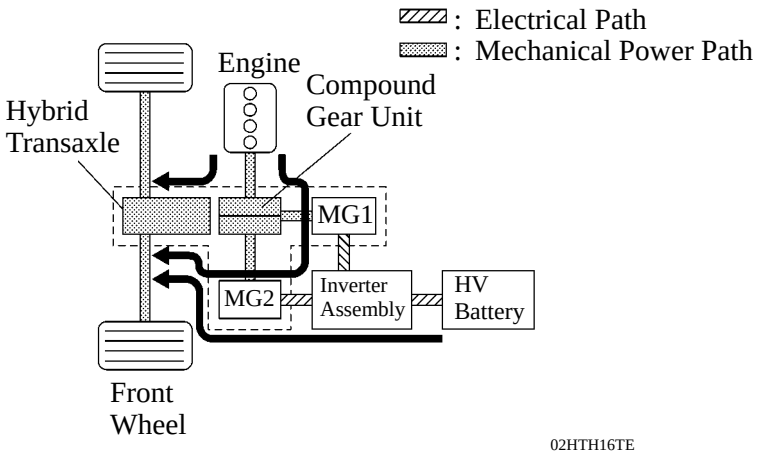

- When more engine power is required, in order to increase the engine speed, the rotation speeds of the related gears change as follows. The directions in which the torque acts on each gear are the same as those described in “During Low Load and Constant-speed Cruising”.

▶ Nomographic Chart ◀

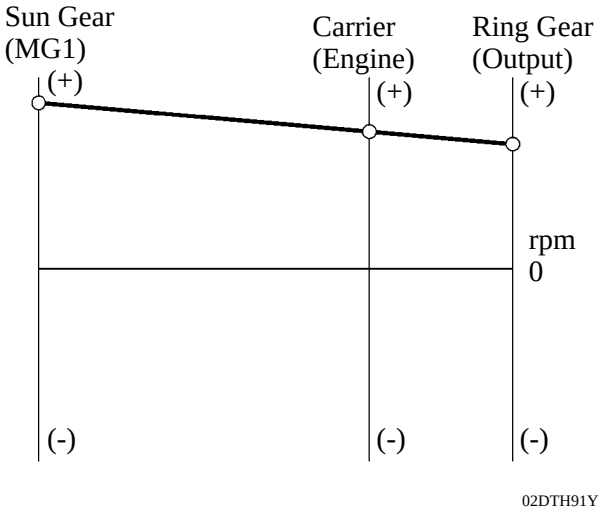

▶ Power Split Planetary Gear Unit Operation ◀

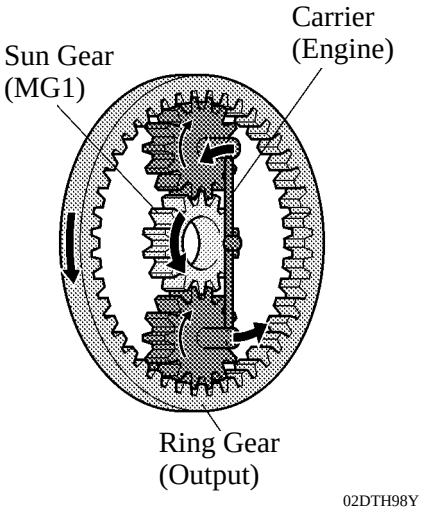

▶ Condition of Power Split Planetary Gear Unit ◀

	Sun Gear (MG1)	Carrier (Engine)	Ring Gear (Output)
Rotational Direction	+	+	+
Torque Condition	-	+	+

Downloaded from www.Manualslib.com manuals search engine

7. During Deceleration Driving/(F)

Deceleration in "D" Range

- While the vehicle is decelerated with the shift lever in the D position, the engine is turned OFF and the motive force changes to zero. At this time, the wheels drive MG2, causing MG2 to operate as a generator, charging the HV batteries.
- If the vehicle decelerates from a higher speed, the engine maintains a predetermined speed without stopping, in order to protect the planetary gear unit.

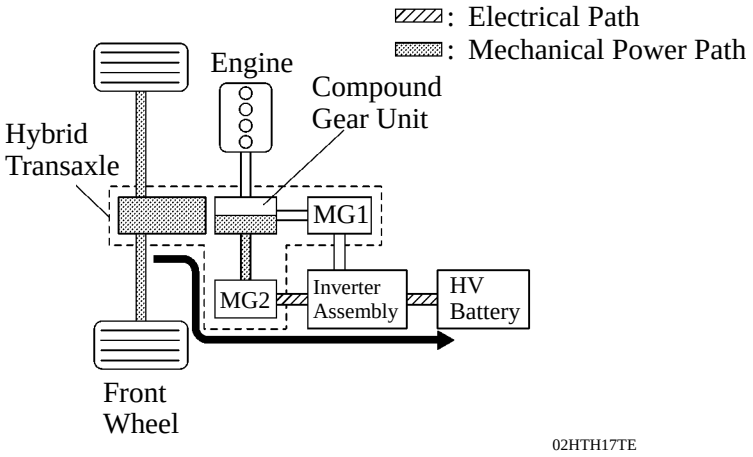

- During deceleration, the ring gear is rotated by the rear wheels. Under this condition, due to the engine being inactive, the rotational speed of the carrier is 0 rpm. In addition, since MG1 does not generate any torque, no torque acts on the sun gear. However, the sun gear (MG1) rotates freely in the (-) direction balancing the rotating ring gear (Output).

▶ Nomographic Chart ◀

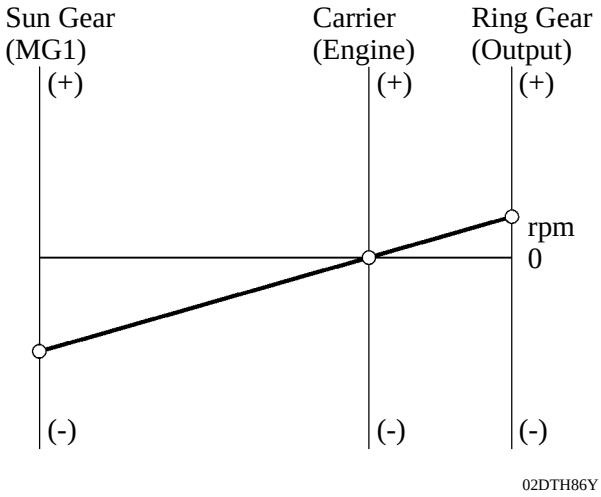

▶ Power Split Planetary Gear Unit Operation ◀

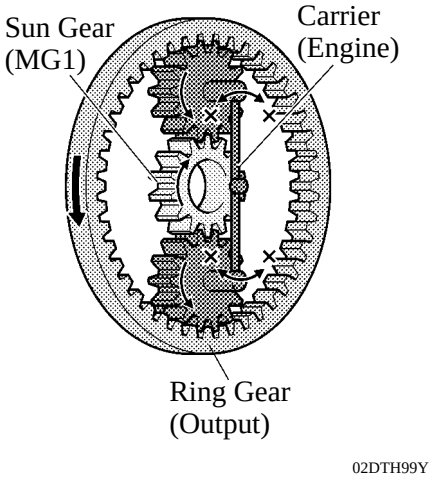

▶ Condition of Power Split Planetary Gear Unit ◀

	Sun Gear (MG1)	Carrier (Engine)	Ring Gear (Output)
Rotational Direction	-	0	+
Torque Condition	0	0	0

Downloaded from www.Manualslib.com manuals search engine

8. During Reverse Driving/(G)

- When the vehicle is being driven in reverse, the required power is supplied by MG2. At this time, MG2 rotates in the opposite direction, the engine remains stopped, and MG1 rotates in the normal direction without generating any electricity.
- During reverse driving, when any of the SOC condition, battery temperature, engine coolant temperature and electrical load condition reaches a specified level, the engine may start. The following illustration represents the condition when the engine is not running.

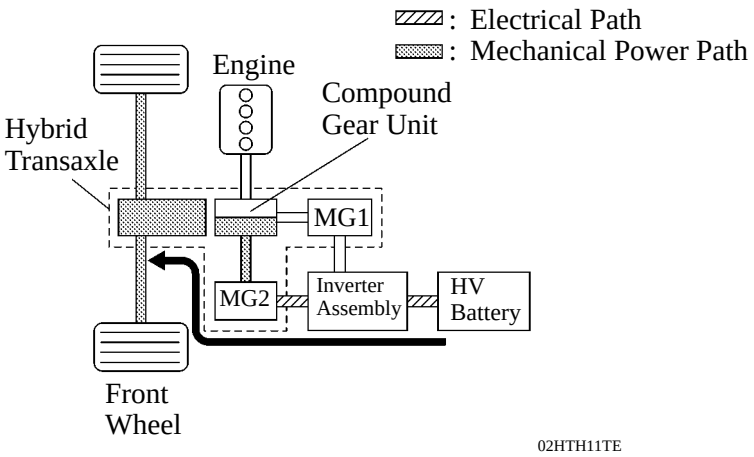

- The conditions of the planetary gear are opposite to those described in “Starting and Running with MG2”. Due to the engine being inactive, the rotational speed of the carrier is 0 rpm but the sun gear (MG1) rotates freely in the (+) direction balancing the rotating ring gear (Output).

▶ Nomographic Chart ◀

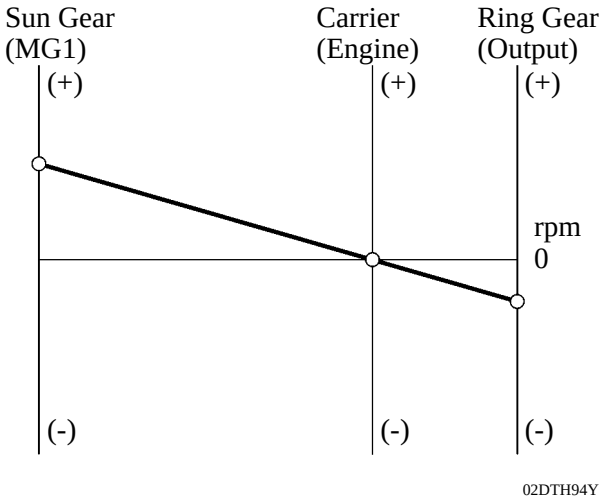

▶ Power Split Planetary Gear Unit Operation ◀

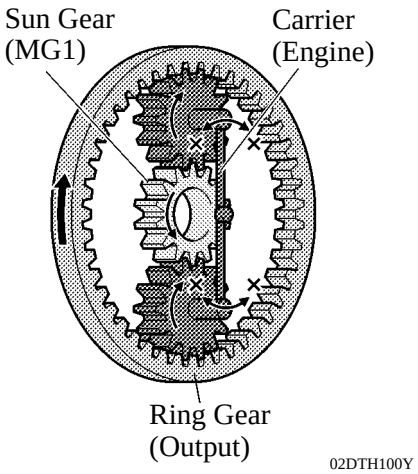

▶ Condition of Power Split Planetary Gear Unit ◀

	Sun Gear (MG1)	Carrier (Engine)	Ring Gear (Output)
Rotational Direction	+	0	-
Torque Condition	0	0	-

Downloaded from www.Manualslib.com manuals search engine

■CONSTRUCTION OF MAIN COMPONENTS

1. MG1 and MG2

General

- Serving as the source of supplemental motive force that provides power assistance to the engine as needed, the electric motor helps the vehicle achieve excellent dynamic performance, including smooth start-offs and acceleration. When the regenerative brake is activated, MG2 (Motor Generator No.2) converts the vehicle's kinetic energy into electrical energy, which is then stored in the HV battery.
- MG1 (Motor Generator No.1) recharges the HV battery and supplies electrical power to drive MG2. In addition, by regulating the amount of electrical power generated (thus varying the generator's rpm), MG1 effectively controls the continuously variable transmission function of the transaxle. MG1 also serves as the starter to start the engine.
- Both the MG1 and MG2 are compact, lightweight, and highly efficient alternating current permanent magnet synchronous type.
- Both the MG1 and MG2 use a rotor containing a V-shaped, high-magnetic force permanent magnet that maximizes the generation of reduction torque. They use a stator made of a low core-loss electromagnetic steel sheet and a high voltage resistant winding wire. Through these measures, the MG1 and MG2 have realized high output and torque in a compact construction.
- A cooling system via water pump for the MG1 and MG2 has been added. For details, refer to the cooling system (for Inverter, MG1 and MG2) on page TH-27.

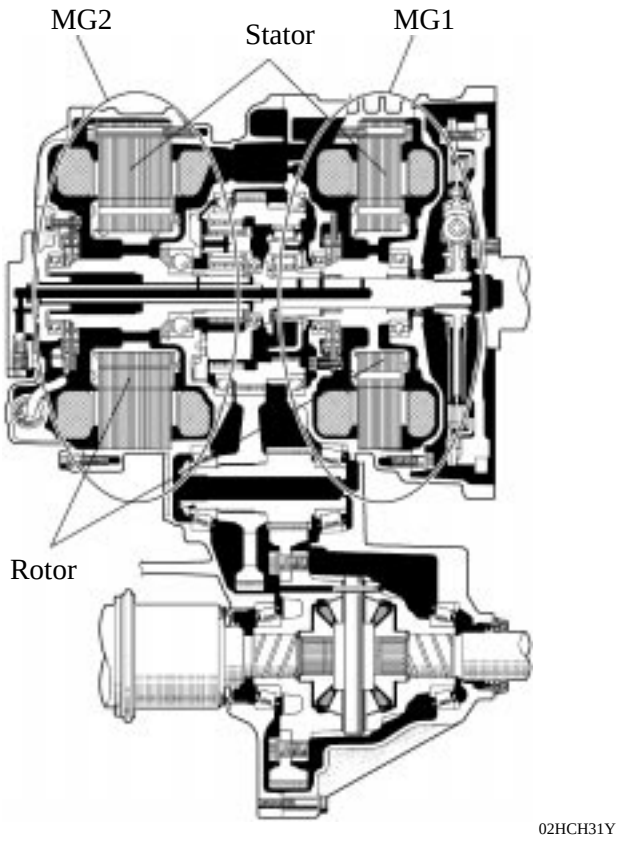

Hybrid Transaxle

Downloaded from www.Manualslib.com manuals search engine

▶ MG1 Specifications ◀

Type	Permanent Magnet Motor
Function	Generate, Engine Starter
Maximum System Voltage*	DC 650 V
Cooling System	Water-cooled

▶ MG2 Specifications ◀

Type	Permanent Magnet Motor
Function	Generate, Drive Front Wheels
Maximum System Voltage*	DC 650 V
Maximum Output	105 kW (141 HP)
Maximum Torque	270 N·m (199 ft·lbf)
Cooling System	Water-cooled

*: These voltage are converted into an alternating current and then supplied to MG1and MG2.

▶ System Diagram ◀

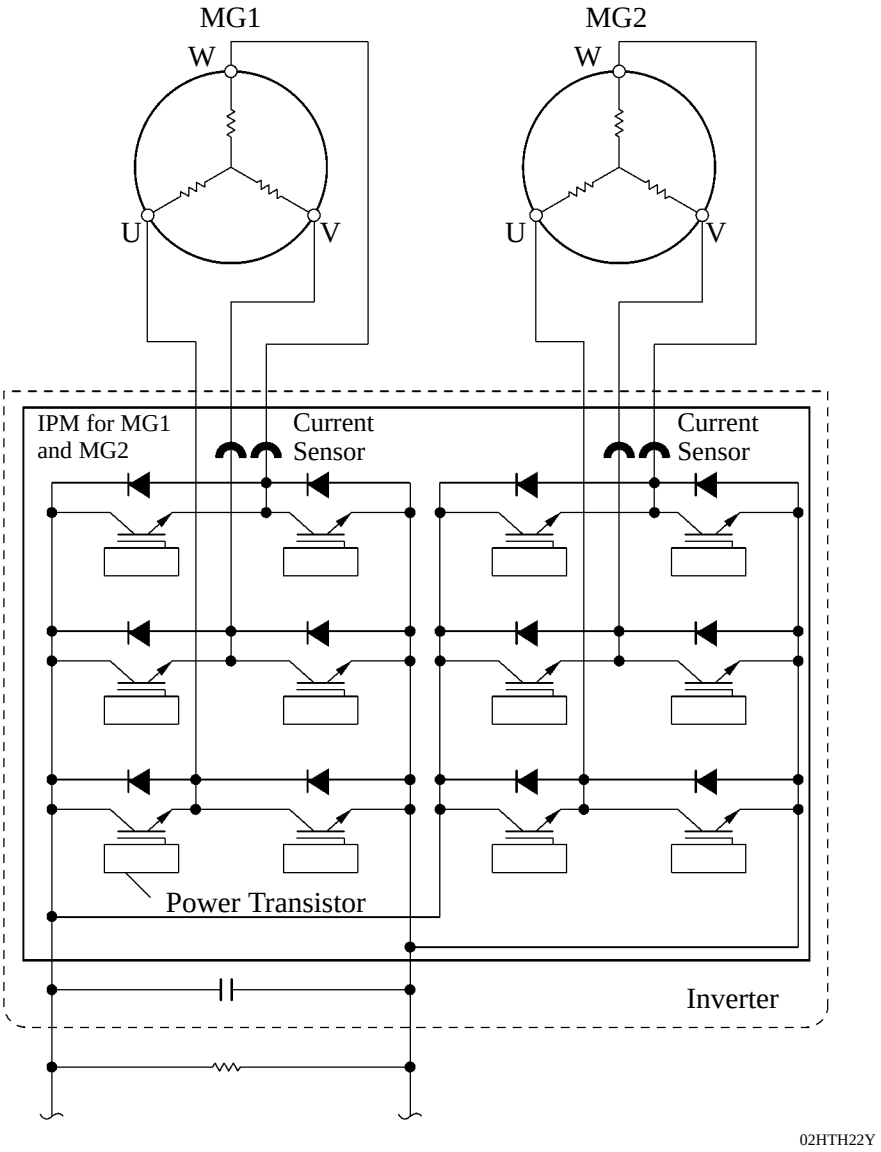

Downloaded from www.Manualslib.com manuals search engine

Permanent Magnet Motor (for MG1 and MG2)

- When a three-phase alternating current is passed through the three-phase windings of the stator coil, a rotational magnetic field is created in the electric motor. By controlling this rotating magnetic field according to the rotor's rotational position and speed, the permanent magnets that are provided in the rotor become attracted by the rotating magnetic field, thus generating torque.
  The generated torque is for all practical purposes proportionate to the amount of current, and the rotational speed is controlled by the frequency of the alternating current.
  Furthermore, a high level of torque, all the way to high speeds, can be generated efficiently by properly controlling the rotating magnetic field and the angles of the rotor magnets.
- When the motor generates electricity, the rotor rotates to create a magnetic field, which creates a current in the stator coil.

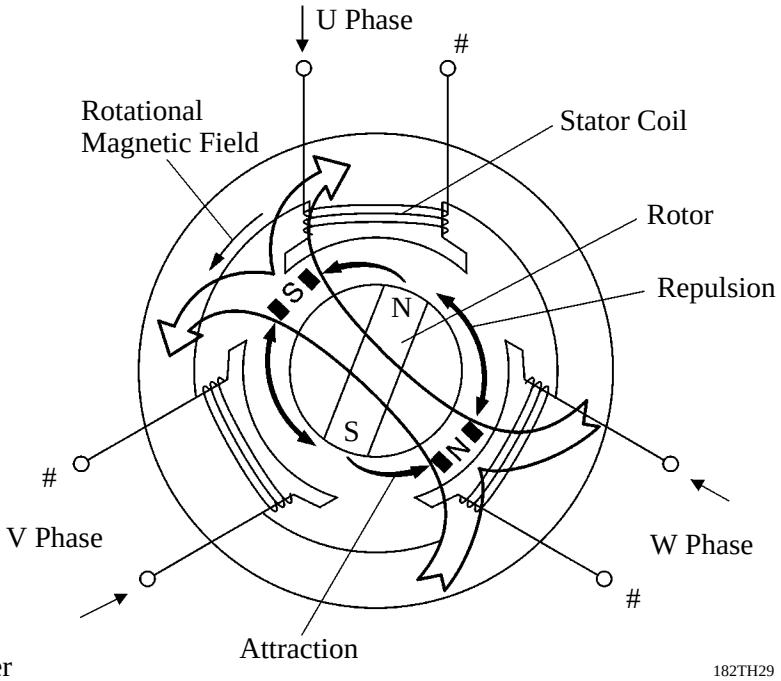

→ : From inverter
: Connected internally in the motor

182TH29

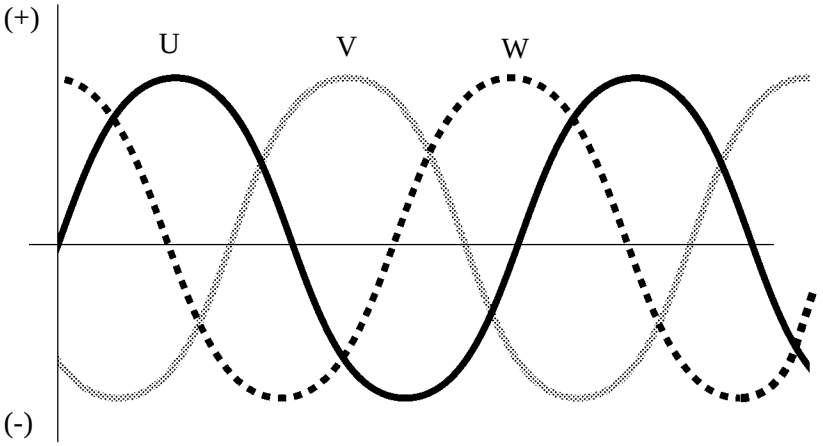

277TH47

Three-phase Alternating Current Output Waveforms

Downloaded from www.Manualslib.com manuals search engine

Speed Sensor/Resolver (for MG1 and MG2)

- This is an extremely reliable and compact sensor that precisely detects the magnetic pole position, which is indispensable for ensuring the efficient control of MG1 and MG2.
- The stator of the sensor contains three types of coils: excitation coil A, detection coil S, and detection coil C. The detection coils S and C are electrically staggered 90 degrees.
  The rotor is oval, the distance of the gap between the stator and the rotor varies with the rotation of the rotor.
- The flow of an alternating current into an excitation coil A results in the output of signals of a constant frequency. Coil S and coil C output values that correspond to the position of the rotor. Therefore, the MG ECU detects the absolute position based on the difference between the coil S and coil C output values. Furthermore, the MG ECU calculates the rotational speed based on the amount of change in the position within a given length of time.

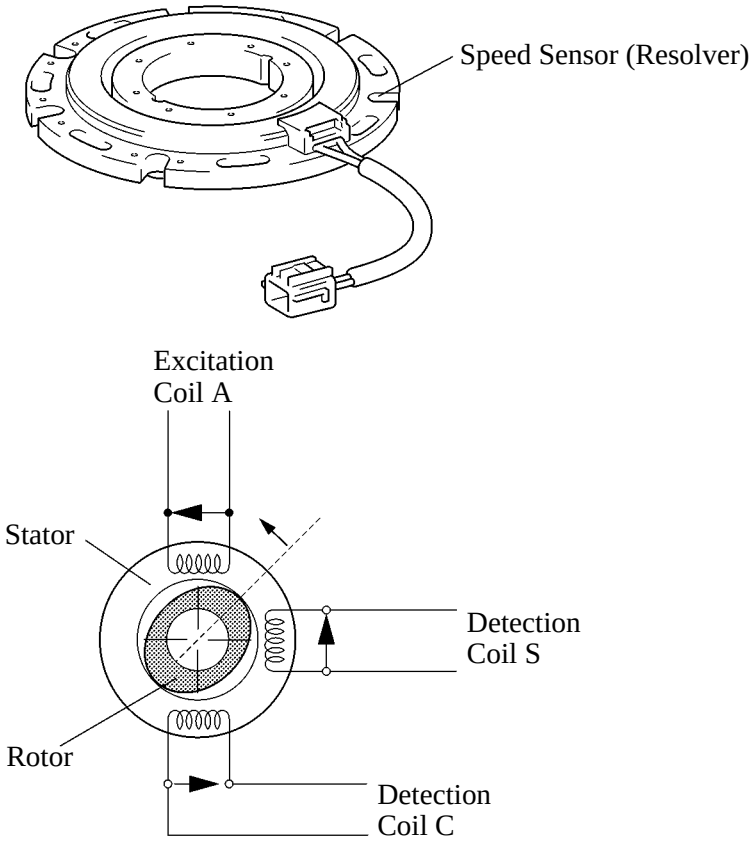

Downloaded from www.Manualslib.com manuals search engine

- Because an alternating current flows from this resolver to the excitation coil at a constant frequency, a constant frequency is output to the coils S and C, regardless of the rotor speed. The rotor is oval, and the distance of the gap between the stator and the rotor varies with the rotation of the rotor. Consequently, the peak values of the waveforms output by the coils S and C vary in accordance with the position of the rotor.
- The MG ECU constantly monitors these peak values, and connects them to form a virtual waveform. The MG ECU calculates the absolute position of the rotor from the difference between the values of the coils S and C. It determines the rotor direction based on the difference between the phases of the virtual waveform of the coil S and the virtual waveform of the coil C. Furthermore, the MG ECU calculates the rotational speed based on the amount of change in the rotor position within a given length of time.
- The diagrams below illustrate the waveforms that are output at coils A, S, and C when the rotor makes a positive rotation of 180° from a certain position.

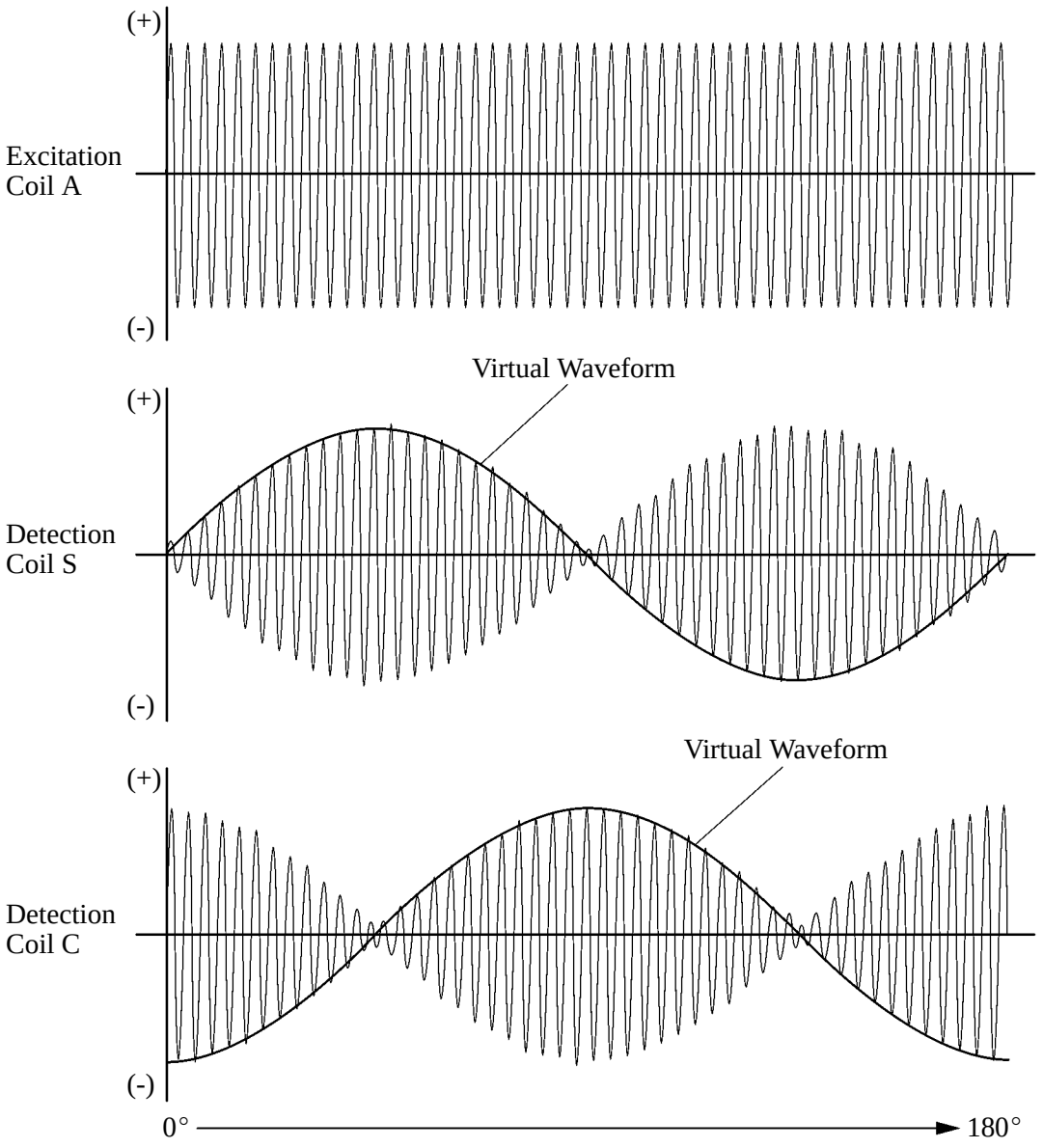

277TH105

Downloaded from www.Manualslib.com manuals search engine

2. Inverter Assembly

General

- The inverter converts the high-voltage direct current of the HV battery into three-phase alternating current for driving MG1 and MG2.
- The activation of the power transistors is controlled by the THS ECU, via the MG ECU. In addition, the inverter transmits information that is needed for current control, such as the output amperage or voltage, to the THS ECU via the MG ECU.
- Together with MG1 and MG2, the inverter is cooled by the dedicated radiator of the coolant system that is separate from that of the engine.
- In the event of a collision involving the vehicle, the circuit breaker sensor, which is installed on the inverter, detects a collision signal in order to stop the system. For details, refer to During Collision Control on page TH-54.
- A boost converter is used in the inverter assembly, in order to boost the nominal voltage output by the HV battery from DC 244.8 V to maximum voltage of DC 650 V. After the voltage is boosted, the inverter converts the direct current into an alternating current.
- Each of the bridge circuits for MG1 and MG2 contains 6 power transistors. In addition, a signal processor/protective function processor has been integrated into a compact IPM (Intelligent Power Module) for driving the vehicle.

For details on the multiple functions of the inverter, refer to Inverter Assembly Control on page TH-49.

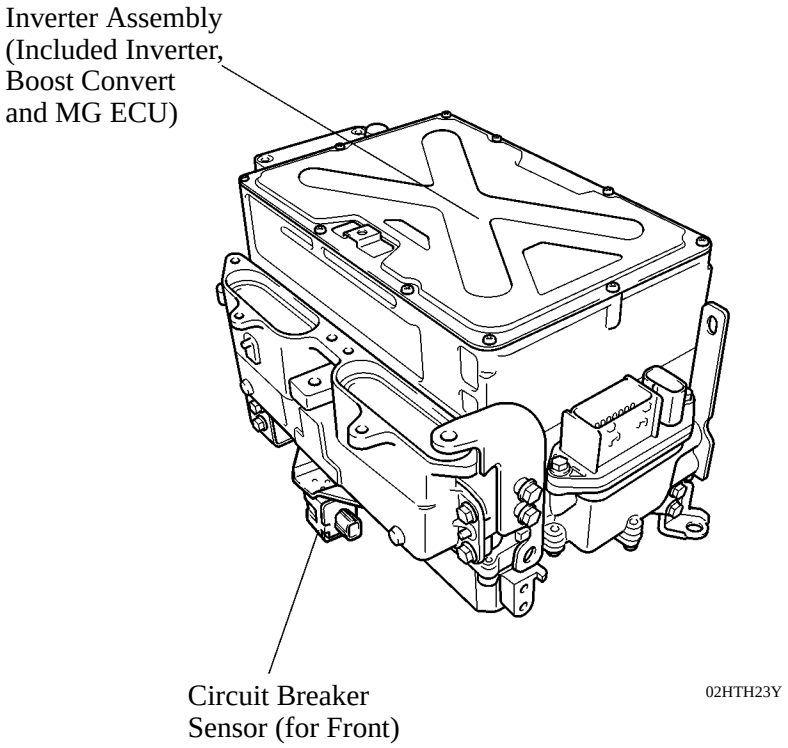

Downloaded from www.Manualslib.com manuals search engine

▶ System Diagram ◀

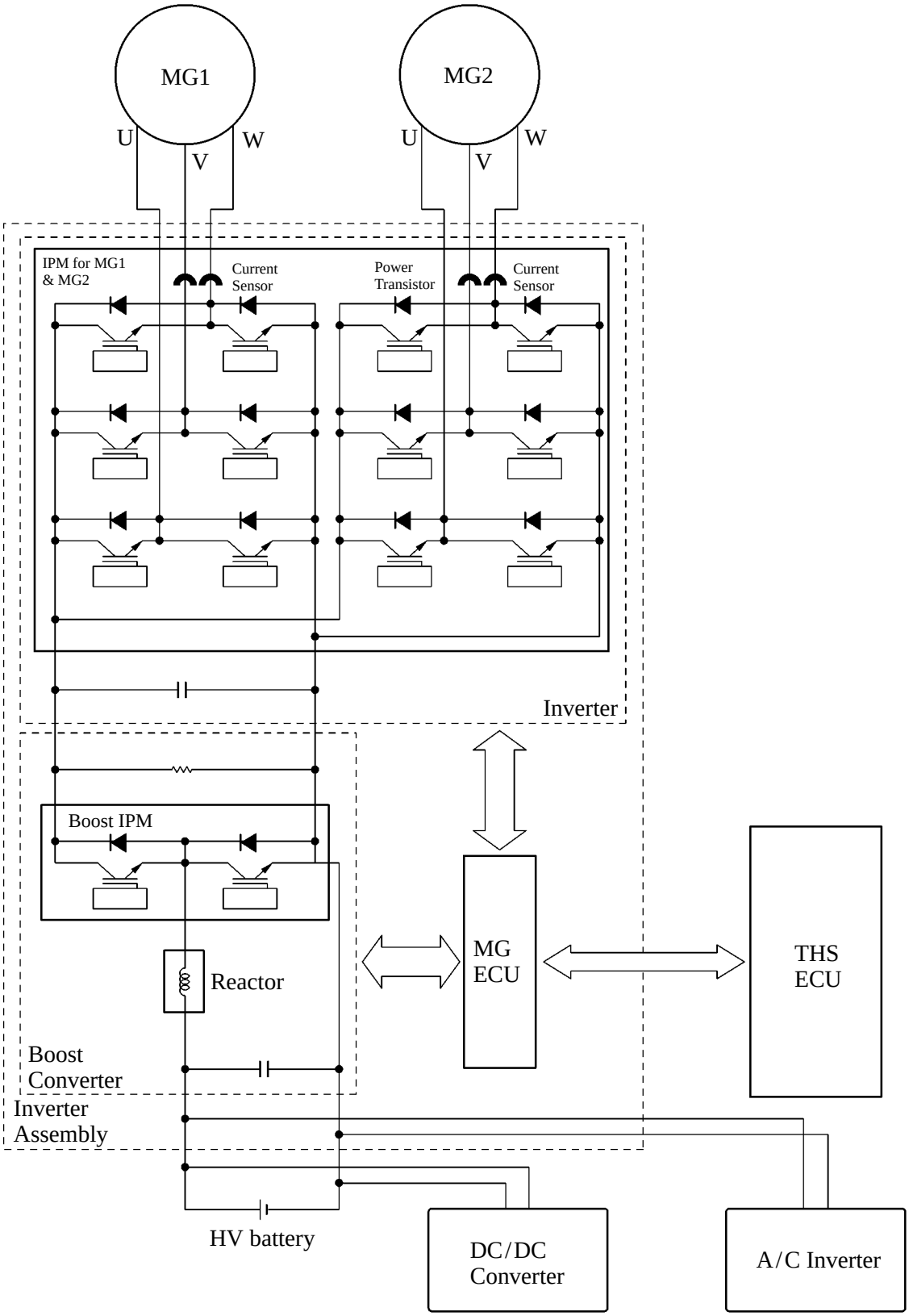

02HTH24Y

Downloaded from www.Manualslib.com manuals search engine

Boost Converter

- This boost converter boosts the nominal voltage of DC 244.8 V that is output by the HV battery to the maximum voltage of DC 650 V. The converter consists of the boost IPM (Intelligent Power Module) with a built-in IGBT (Insulated Gate Bipolar Transistor) which performs the switching control, and the reactor which stores energy. By using these components, the converter boosts the voltage. For details, refer to Inverter Assembly Control on page TH-49.
- When MG1 and MG2 acts as the generator, the inverter converts the alternating current into the maximum voltage of DC 650 V, and then the boost converter reduces the voltage to the nominal voltage of DC 244.8 V, thus the HV battery is charged.

▶ System Diagram ◀

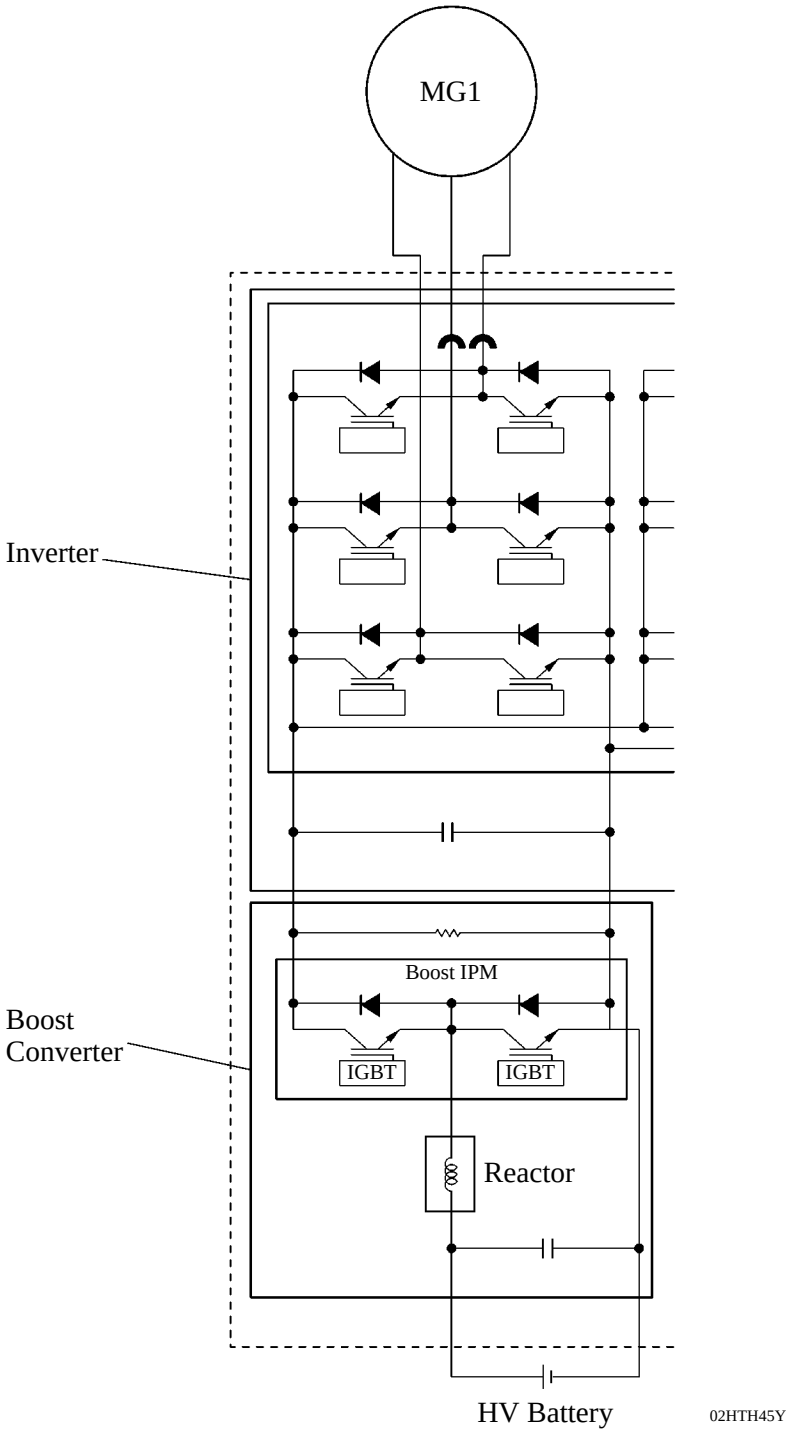

Downloaded from www.Manualslib.com manuals search engine

MG (Motor Generator) ECU

- The MG ECU is provided in the inverter assembly. In accordance with the signals received from the THS ECU, the MG ECU controls the inverter and boost converter in order to drive MG1 or MG2 or cause them to generate electricity.
- The MG ECU transmits information that is required for vehicle control, such as the inverter output amperage, inverter temperature, and any failure information, to the THS ECU. It receives information that is required for controlling the motor generator, such as the required motive force and the motor temperature, from the THS ECU.

3. Cooling System (for Inverter, MG1 and MG2)

- A cooling system that is independent from the engine cooling system has been provided to cool the inverter, MG1 and MG2.
- This cooling system activates when the power supply status is switched to the READY ON state.
- A radiator, which is exclusively used for the inverter, MG1 and MG2, has been provided above the condenser (for the A/C). By integrating the independent inverter radiator, A/C condenser and engine radiator, the layout has been made more compact.

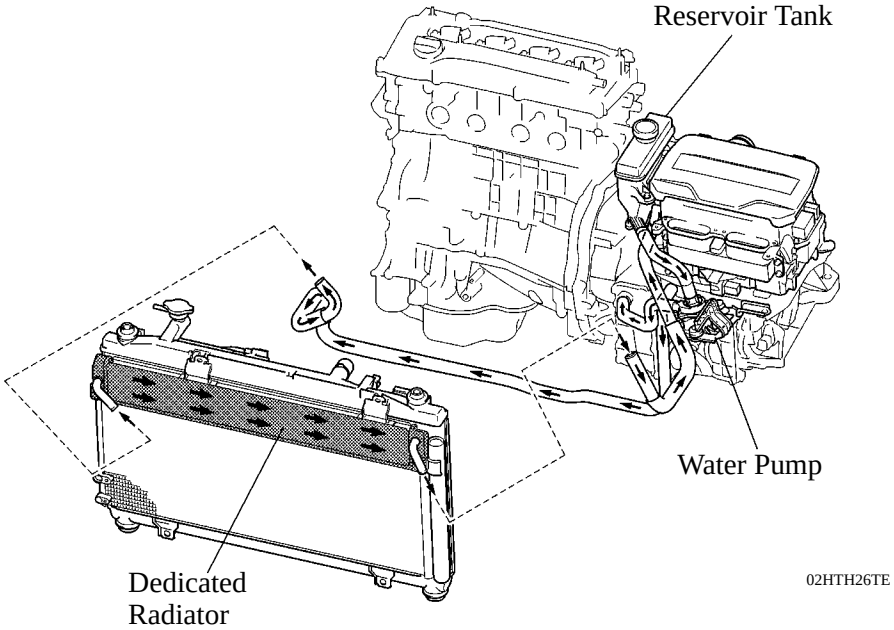

▶ Specifications ◀

Water Pump	Discharge Volume liter/min.		10 or above (65°C (149°F))
Coolant	Capacity liters (US qts, Imp. qts)		2.9 (3.1, 2.6)
	Type		TOYOTA Genuine Super Long Life Coolant (SLLC) or the equivalent*
	Color		Pink
	Maintenance Intervals	First Time	100,000 miles (160,000 km)
		Subsequent	Every 50,000 miles (80,000 km)

*: Similar high quality ethylene glycol based non-silicate, non-amine, non-nitrite, and non-borate coolant with long-life hybrid organic acid technology. (Coolant with hybrid organic acid technology consists of a combination of low phosphates and organic acids.)

- SLLC is pre-mixed (50% coolant and 50% deionized water for U.S.A. or 55% coolant and 45% deionized water for Canada), so no dilution is needed when adding or replacing SLLC in the vehicle.

Downloaded from www.Manualslib.com manuals search engine

4. HV Battery

General

- The ’07 Camry Hybrid model uses sealed nickel metal hydride (Ni-MH) HV batteries. The HV batteries have a high power density, are lightweight and offer longevity to match the characteristics of the THS II. Because the THS II effects charge/discharge control to maintain the HV batteries at a constant SOC (state of charge) level while the vehicle is operating normally, it does not need to be recharged externally.
- The HV batteries use nickel-plated, metal container type cells to realize enhanced cooling performance and a compact construction. As a result, high power density, lightweight construction, and longevity have been accomplished at high levels.
- The HV battery unit consists of 34 separate batteries. The batteries each comprise 6 cells and they are connected to each other in series through a bus bar module. The cells of the batteries are connected at two locations in order to reduce the internal resistance and improve efficiency. The HV battery unit, which has a total of 204 cells (6 cells x 34 batteries) and a nominal voltage of 244.8 V (1.2 V x 204 cells), is located in the luggage compartment behind the rear seat.
- A junction block, battery smart unit and DC/DC converter are used. Integrated into the junction block are an SMRG (System Main Relay Ground), SMRB (System Main Relay Battery) and a current sensor. The battery smart unit monitors the HV battery. The DC/DC converter supplies power to the auxiliary battery after decreasing the nominal voltage of DC 244.8 V supplied by the HV battery to DC 12 V. Power to the lights, audio system, air conditioning system (except the electric inverter compressor) and ECUs is supplied by the auxiliary battery.
  The battery smart unit, junction block, and DC/DC converter are located in the battery front side carrier, which is in the same housing as the HV battery unit. This realizes a compact package.
- An air-cooling method, which uses a dedicated cooling fan to cool the HV battery with air from inside the cabin, is employed. A dedicated cooling fan is also provided for the DC/DC converter. Thus, highly efficient air-cooling has been achieved.
- A service plug that shuts off the circuit is provided in the middle of the HV battery modules (between No.18 and No.19 batteries). Before servicing any portion of the high-voltage circuit, be sure to remove the service plug.

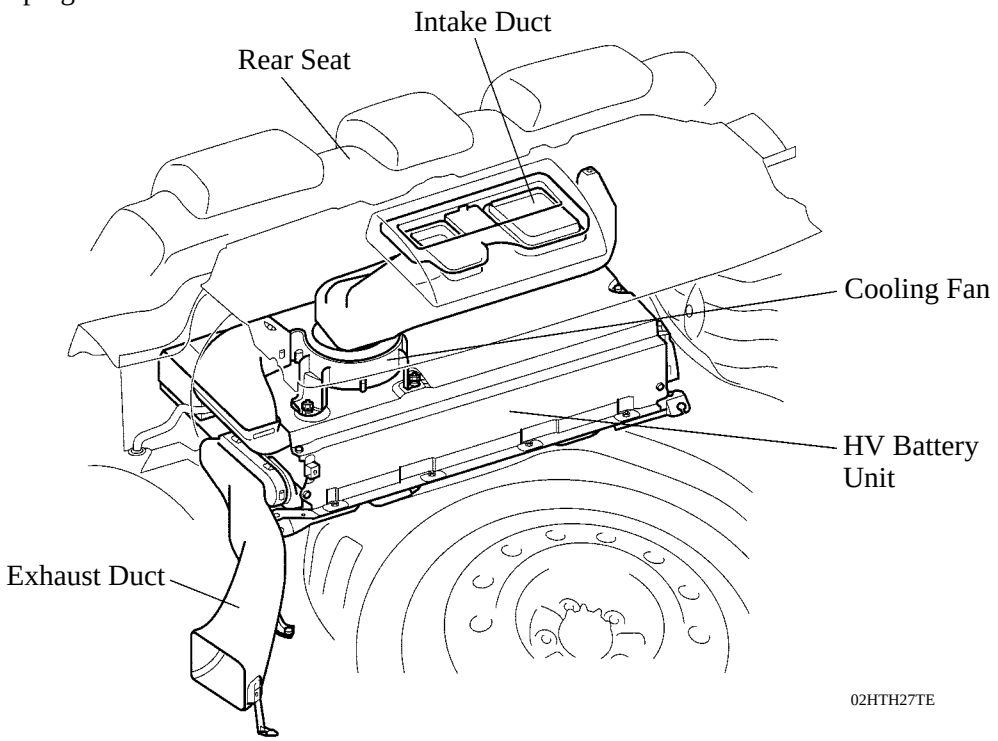

Downloaded from www.Manualslib.com manuals search engine

▶ Battery Specifications ◀

Type	Sealed Nickel Metal Hydride Battery
Cell Quantity	204 cells (6 cells x 34 Modules)
Cell Type	Nickel Plated Metal Container
Nominal Voltage	244.8 V

Layout of Main Components

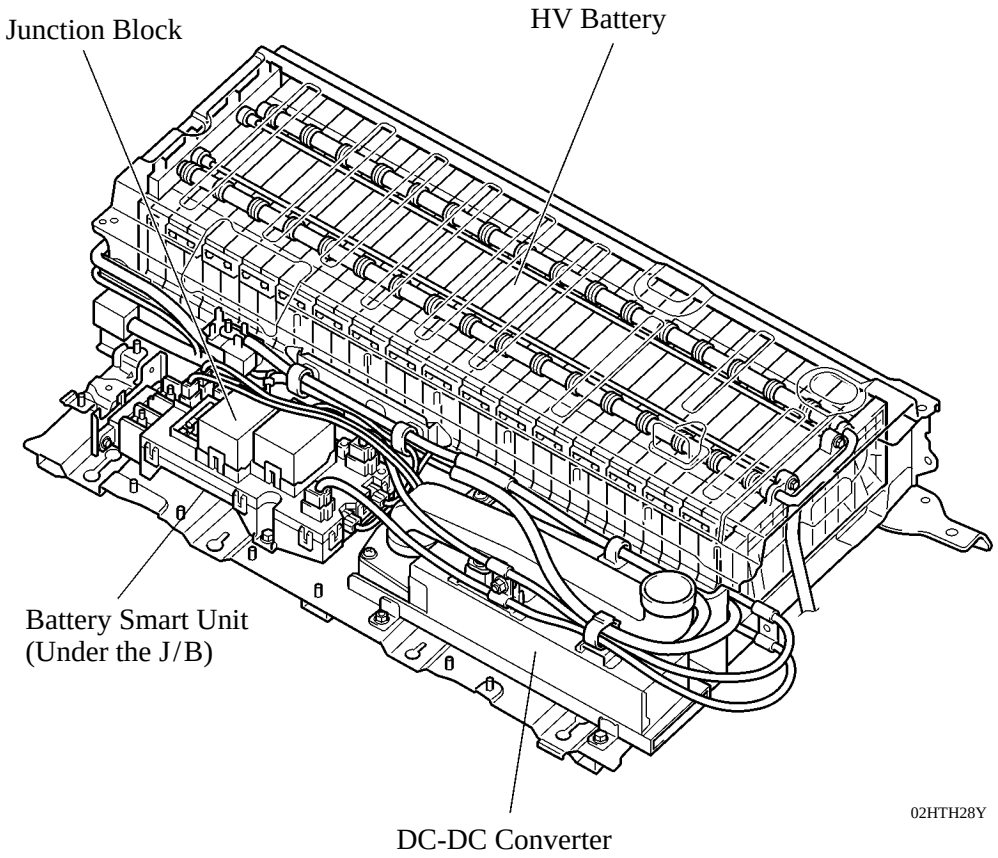

Downloaded from www.Manualslib.com manuals search engine

DC/DC Converter

The power source for auxiliary equipment of the vehicle such as the lights, audio system, and the air conditioning system (except electric inverter compressor), as well as the ECUs, is based on a DC 12 V system. Because the THS II generator outputs at nominal voltage of DC 244.8 V, the converter is used to transform the voltage from DC 244.8 V to DC 12 V in order to recharge the auxiliary battery.

▶ System Diagram ◀

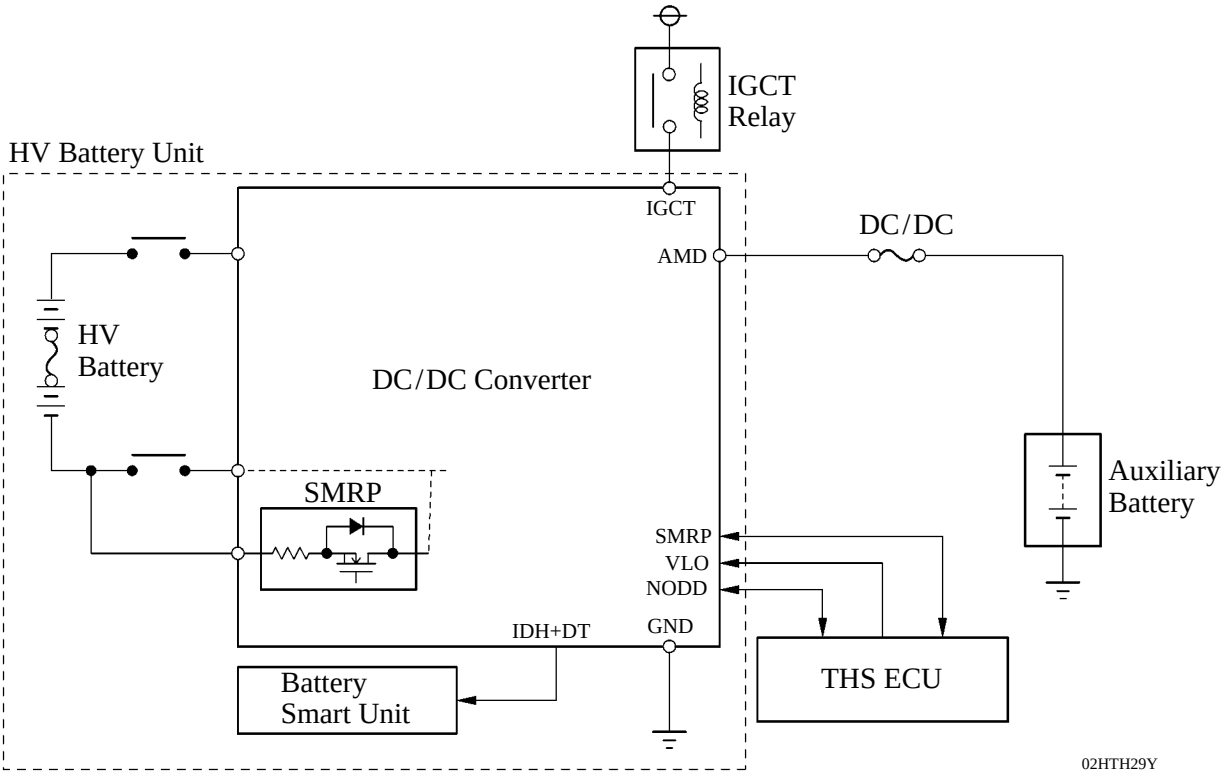

Junction Block

A junction block, in which an SMRG and SMRB are integrated, is used.

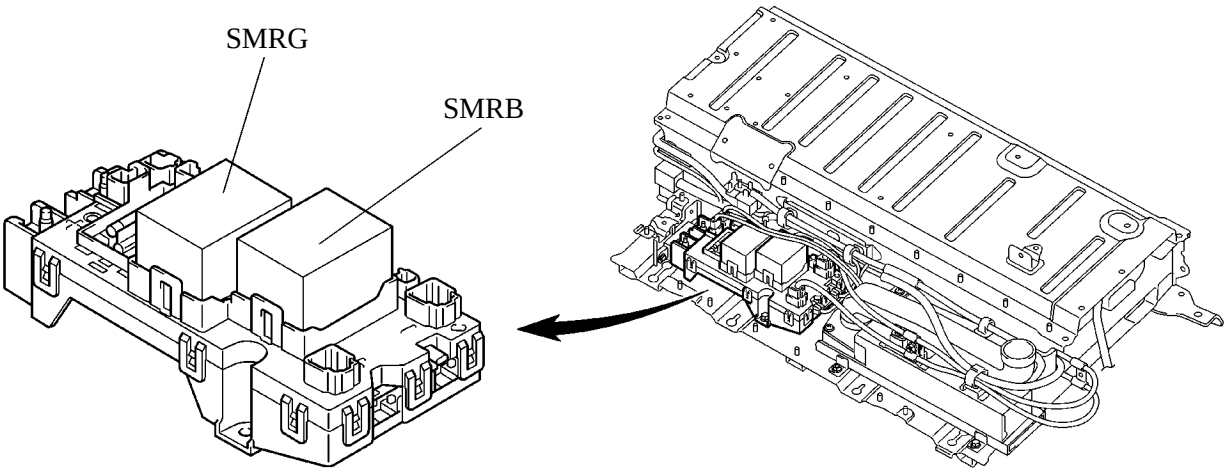

Junction Block

02HTH30Y

Downloaded from www.Manualslib.com manuals search engine

Service Plug

By removing the service plug before performing any inspection or service, the high-voltage circuit is shut off at the intermediate position of the HV battery, thus ensuring safety during service.
The service plug assembly contains a reed switch for interlock. Lifting the clip lock up turns OFF the lead switch, which shuts off the SMR. However, to ensure safety, make sure to turn OFF the ignition switch before removing the service plug.
The main fuse for the high-voltage circuit is provided inside of the service plug assembly.
For further details on how to handle the service plug and other safety cautions, refer to the 2007 Camry Hybrid Vehicle Repair Manual (Pub. No. RM02H0U).

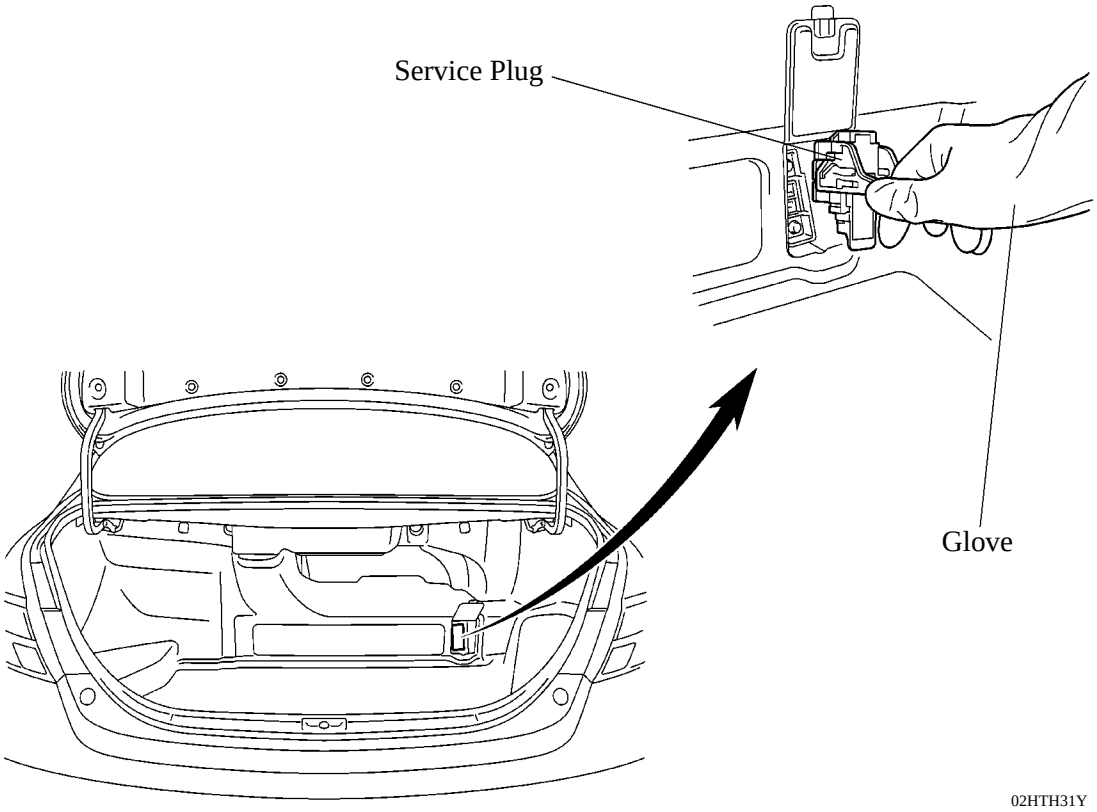

Service Tip

After the service, please do not start the system until the service plug is connected.
The battery smart unit may break down.

Downloaded from www.Manualslib.com manuals search engine

HV Battery and DC/DC Converter Cooling System

1) HV Battery Cooling System

- A dedicated cooling system is used to ensure that the HV battery performs properly, despite it generating significant heat during the repetitive charge and discharge cycles.
  This cooling system employs an air-cooling method, which uses the dedicated cooling fan to cool the HV battery with air from inside the cabin.
- The air from inside the cabin, which is introduced through the intake duct located on the rear package tray trim, flows downwards through the battery module, reducing the temperature of the battery module, and is emitted from the vehicle through the exhaust duct.
- The THS ECU controls the operation of the cooling fan for the HV battery. The THS ECU receives the signals from the battery temperature sensor, which is built into the HV battery, via the battery smart unit. Then, it controls the cooling fan in order to control the battery module temperature appropriately. For details, refer to THS ECU Control on page TH-40.

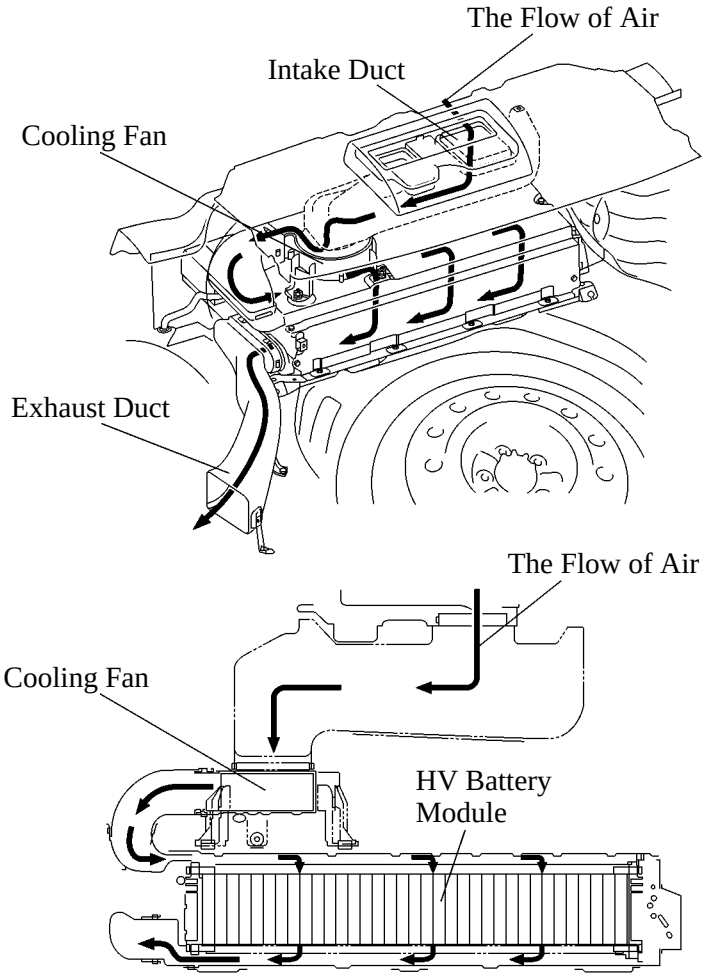

Rear View Cross Section 02HTH32TE

▶ HV Battery Cooling Fan Specifications ◀

Fan Type	Sirocco Fan
Motor Type	DC Motor (without Brush)

Downloaded from www.Manualslib.com manuals search engine

2) DC/DC Converter Cooling System

As with as the HV battery cooling system, the DC/DC converter cooling system uses a dedicated cooling fan to cool the converter. Air from inside the cabin is introduced through the intake duct located on the rear package tray trim. In addition, the converter itself is equipped with cooling fins. Thus, excellent air-cooling performance is achieved.

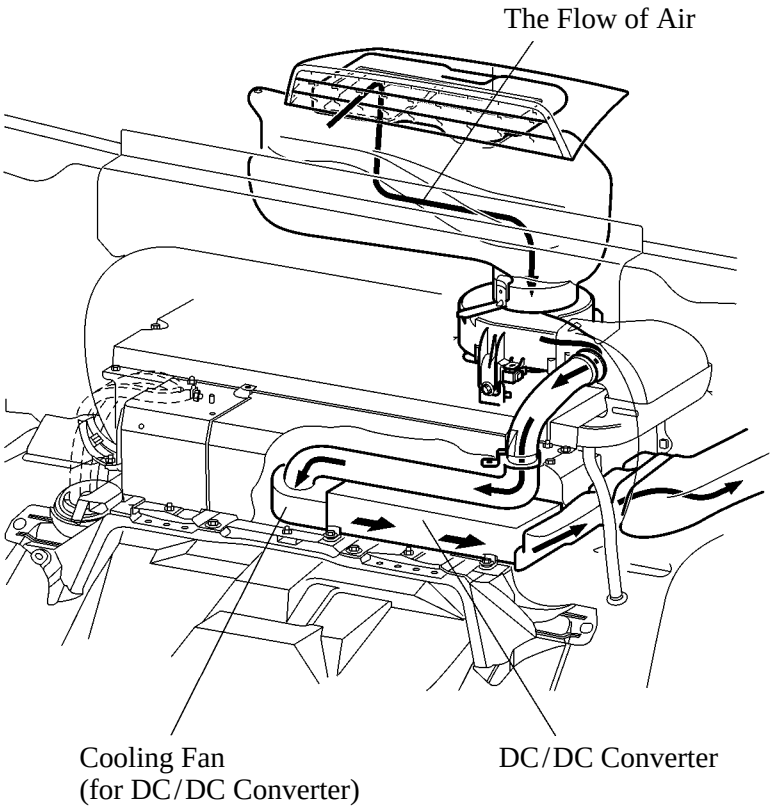

▶ DC/DC Converter Cooling Fan Specifications ◀

Type	Sirocco Fan
Motor Type	DC Motor (without Brush)

Downloaded from www.Manualslib.com manuals search engine

5. Accelerator Pedal Position Sensor

The magnetic yoke that is mounted at the base of the accelerator pedal arm rotates around the Hall IC in accordance with the amount of effort that is applied to the accelerator pedal. The Hall IC converts the changes in the magnetic flux that occur at that time into electrical signals, and outputs them in the form of accelerator pedal effort to the THS ECU.

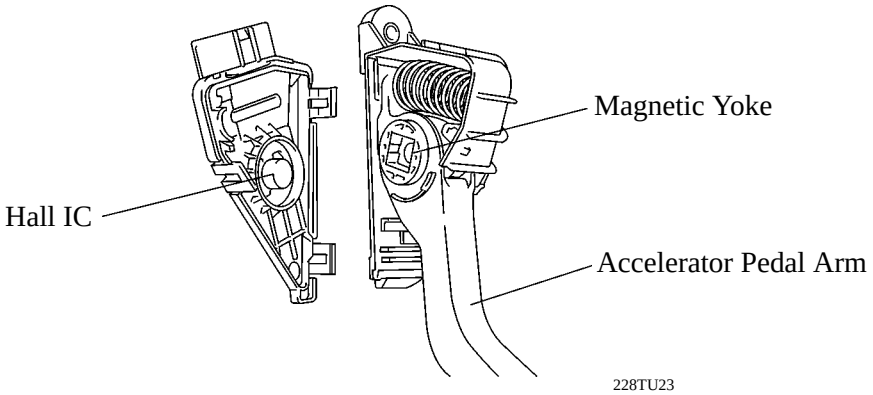

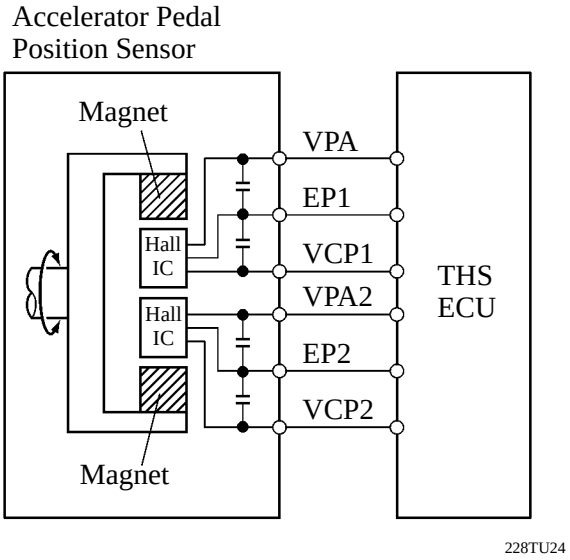

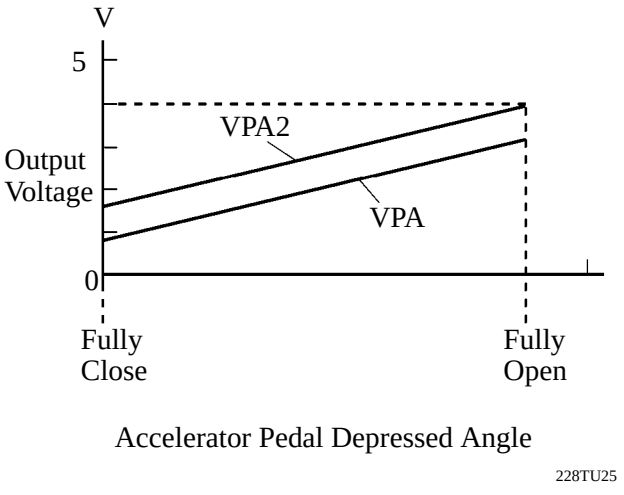

Service Tip

The inspection method differs from the conventional accelerator pedal position sensor because this sensor uses a hall IC. For details, refer to the 2007 Camry Hybrid Vehicle Repair Manual (Pub. No. RM02H0U).

Downloaded from www.Manualslib.com manuals search engine

6. Power Cable

The power cable is a high-voltage, high-amperage cable that connects the HV battery module with the inverter, the inverter with MG1 and MG2, and the inverter with the electric inverter compressor. The power cable starts at the connector of the junction block of the HV battery, which is located behind the rear seat. It passes under the floor panel, along the side of the floor reinforcement, and connects to the inverter in the engine compartment. The power cable is shielded in order to reduce electromagnetic interference.
For identification purposes, the high-voltage wiring harness and connectors are color-coded orange to distinguish them from those of the ordinary low-voltage wiring.

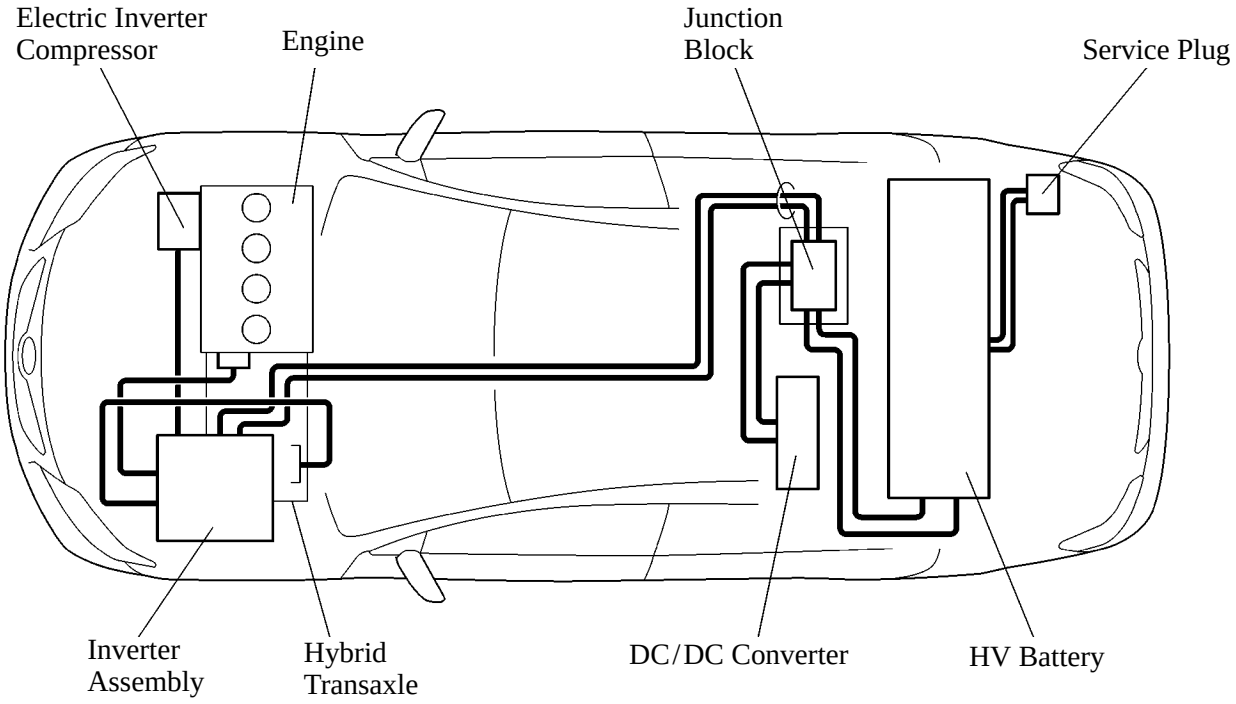

02HTH33Y

Downloaded from www.Manualslib.com manuals search engine

■THS II CONTROL SYSTEM

1. General

The THS II control system contains the following components.

Item	Outline
THS ECU Control (See page TH-40)	● The THS ECU calculates the target motive force based on the shift position, the degree to which the accelerator pedal is depressed, and the vehicle speed. It effects control in order to create the target motive force by optimally combining the power of MG1, MG2, and the engine. ● The THS ECU calculates the engine motive force based on the target motive force, which has been calculated based on the requirements of the driver and the conditions of the vehicle. In order to create this motive force, the THS ECU appropriately controls the ETCS-i (Electronic Throttle Control System-intelligent) system, fuel injection volume, injection timing, and VVT-i (Variable Valve Timing-intelligent) system. ● The THS ECU monitors the SOC of the HV battery and the temperature of the HV battery, MG1, and MG2, in order to optimally control these items. ● The THS ECU effects monitor control to monitor the conditions of the HV batteries and cooling fan control to keep the HV battery and DC/DC converter at a predetermined temperature. Thus, it optimally controls these components. ● When the shift lever is in the N position, the THS ECU effects shut down control to electrically stop MG1 and MG2. ● For the purpose of protecting the circuit from high voltages and ensuring the reliability of the circuit shut down, the THS ECU effects SMR control through the use of 3 relays to connect and shut down the high-voltage circuit. ● The THS ECU calculates the SOC by estimating the charging and discharging amperage of the HV battery, in order to effect condition control. ● The THS ECU uses the temperature sensors that are provided on the HV battery module to monitor the temperature of the HV battery module and controls its temperature by optimally controlling the dedicated cooling fan. ● The THS ECU controls the DC/DC converter in accordance with the temperature of the auxiliary battery, in order to control the charging of the auxiliary battery.
MG1 and MG2 Main Control (See page TH-47)	● MG1, which is driven by the engine, generates a high voltage (alternating current) in order to operate MG2 and charge the HV battery. It Also functions as a starter to start the engine. ● MG2, which is driven by electrical power from MG1 or the HV battery, generates a motive force for the front wheels. ● MG2 generates electricity to charge the HV battery (regenerative brake control) during braking, and when the accelerator pedal is not being depressed. ● Speed sensors (resolvers) detect the speeds and the rotor positions of MG1 and MG2, and output them to the THS ECU via the MG ECU. ● Temperature sensors mounted on MG1 and MG2 detect the temperatures and transmit them to the THS ECU.

(Continued)

Downloaded from www.Manualslib.com manuals search engine

Item		Outline
Inverter Assembly Control (See page TH-49)		● The inverter converts the direct current from the HV battery into an alternating current for MG1 and MG2, or vice versa, in accordance with the signals provided by the THS ECU via the MG ECU. In addition, the inverter supplies the alternating current from the MG1 power to MG2. ● Via the MG ECU, the THS ECU sends the signal to the power transistor in the inverter to switch between the U, V, and W phases of MG1 and MG2, in order to drive MG1 and MG2. ● The THS ECU shuts down if it receives an overheating, over-current, or fault voltage signal from the inverter.
	Boost Converter Control	● The boost converter boosts the HV battery nominal voltage of DC 244.8 V up to a maximum voltage of DC 650 V, in accordance with the signals provided by the THS ECU via the MG ECU. ● The inverter converts the alternating current generated by MG1 or MG2 into a direct current. The boost converter reduces the DC 650 V to DC 244.8 V (for the HV battery) in accordance with the signals provided by the THS ECU via the MG ECU.
DC/DC Converter Control		● The DC/DC converter reduces the nominal voltage of DC 244.8 V to DC 12 V in order to supply electricity to the body electrical components, as well as to recharge the auxiliary battery (DC 12 V). ● This converter controls the voltage of the auxiliary battery to keep it constant.
Skid Control ECU Control (See page TH-52)		During braking, the skid control ECU calculates the required regenerative brake force and transmits it to the THS ECU. Upon receiving this signal, the THS ECU transmits the actual regenerative brake control value to the skid control ECU. Based on this result, the skid control ECU calculates and executes the required hydraulic pressure brake force.
Battery Control (See page TH-53)		The battery smart unit monitors the voltage, current and temperature of the HV battery module and the voltage of the cooling fan, and transmits them to the THS ECU.
Shift Control (See page CH-12)		The THS ECU detects the shift position (P, R, N, D, or B) in accordance with the signal provided by the shift position sensor, and controls MG1, MG2, and the engine, in order to create the driving conditions that suit the selected shift position.
During Collision Control (See page TH-54)		During a collision, if the THS ECU receives an airbag deployment signal from the airbag sensor assembly or an actuation signal from the circuit breaker sensor located in the inverter, it turns OFF the SMR (System Main Relay), in order to shut off the entire power supply.
Cruise Control System Operation Control		When the cruise control ECU that is enclosed in the THS ECU receives a cruise control switch signal, it optimally regulates the engine, MG1 and MG2 in order to obtain the target vehicle speed, as determined through the driver control, from the combination of their motive forces.
Indicator and Warning Light Illumination Control (See page TH-55)		The THS ECU informs the driver about the vehicle conditions and any system malfunctions by illuminating or blinking the indicator lights and warning lights located in the combination meter and using the warning indication of the multi-information display or the radio and player with display.
Diagnosis (See page TH-58)		When the THS ECU detects a malfunction, it performs a diagnosis and stores the values relating to the failure.
Fail-Safe (See page TH-58)		When the THS ECU detects a malfunction, the THS ECU stops or controls the actuators and other ECUs in accordance with the data already stored in the memory.

Downloaded from www.Manualslib.com manuals search engine

2. Construction

The configuration of the THS II control system in the ’07 Camry Hybrid model is shown in the following chart.

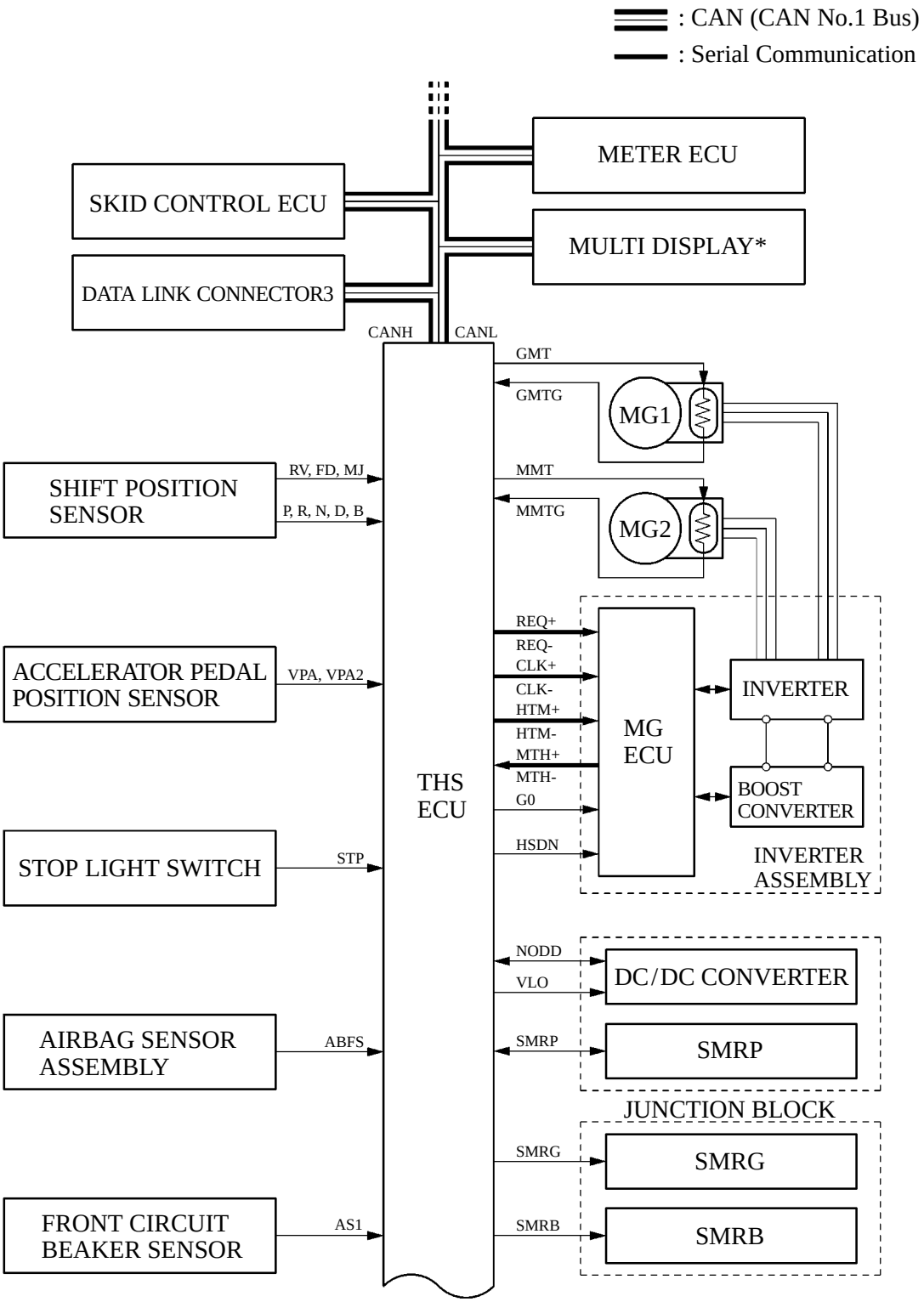

(Continued)

02HTH34TE

Downloaded from www.Manualslib.com manuals search engine

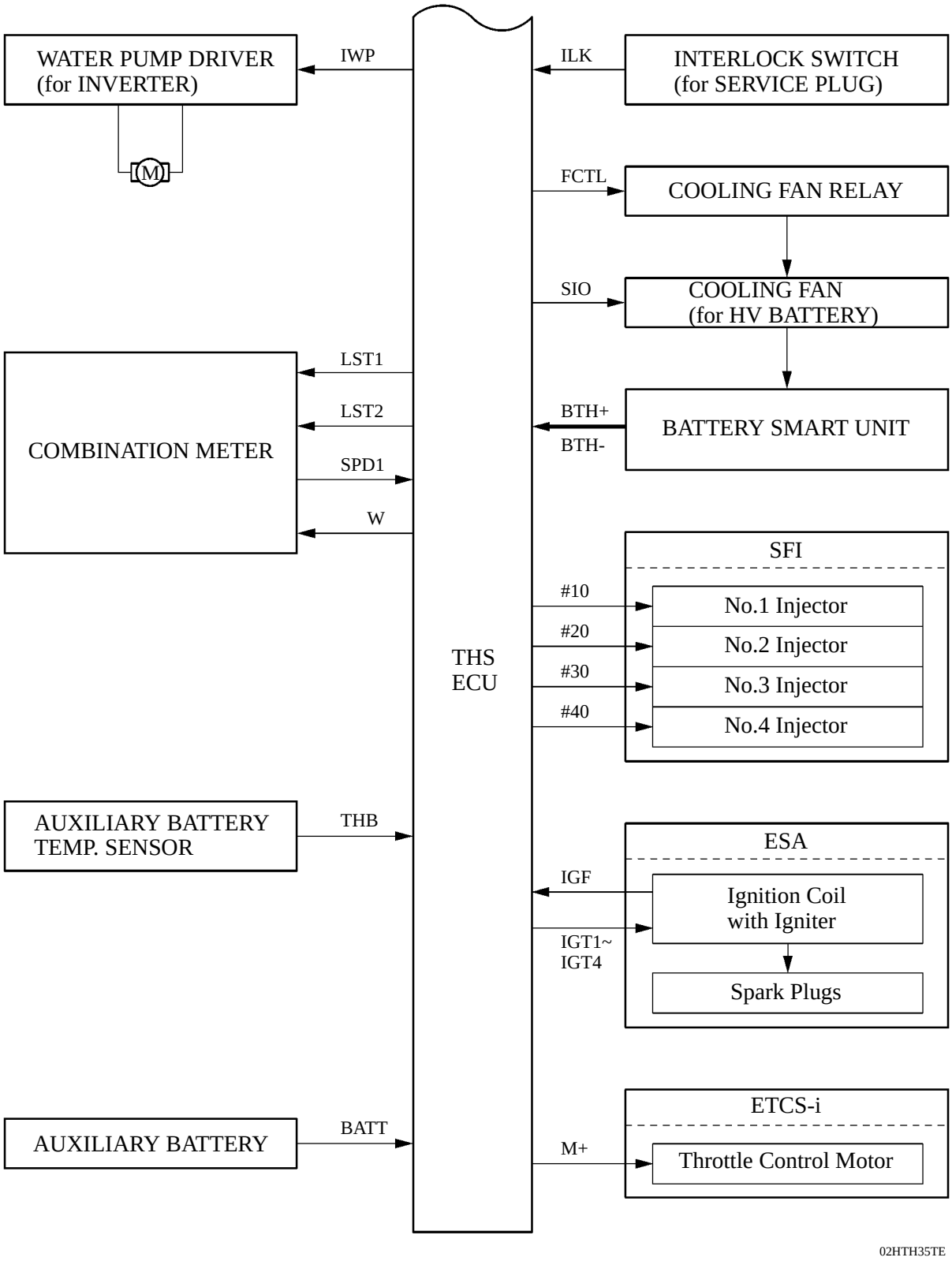

Downloaded from www.Manualslib.com manuals search engine

3. THS ECU Control

General

- The THS ECU detects the amount of effort applied to the accelerator pedal in accordance with the signals provided by the accelerator pedal position sensor. The THS ECU receives signals from the speed sensor (resolver) in the MG1 and MG2, and detects the shift position signal from the shift position sensor. The THS ECU determines the driving conditions of the vehicle in accordance with these pieces of information, and optimally controls the motive forces of MG1, MG2, and the engine. Furthermore, the THS ECU optimally controls the output and torque of these motive forces in order to realize lower fuel consumption and cleaner exhaust emissions.
- The THS ECU calculates the engine motive force based on the calculated target motive force, and by taking the SOC and the temperature of the HV battery module into consideration. The value obtained by subtracting the engine motive force from the target motive force is the MG2 motive force.
- The THS ECU realizes the required engine motive force by properly effecting ETCS-i control, fuel injection volume control, injection timing control, and VVT-i system control. Furthermore, the THS ECU appropriately operates MG1 and MG2 in order to realize the required MG2 motive force.

▶ Flow of Motive Force Calculation ◀

(Target Motive Force) - (Engine Motive Force) = (MG2 Motive Force)

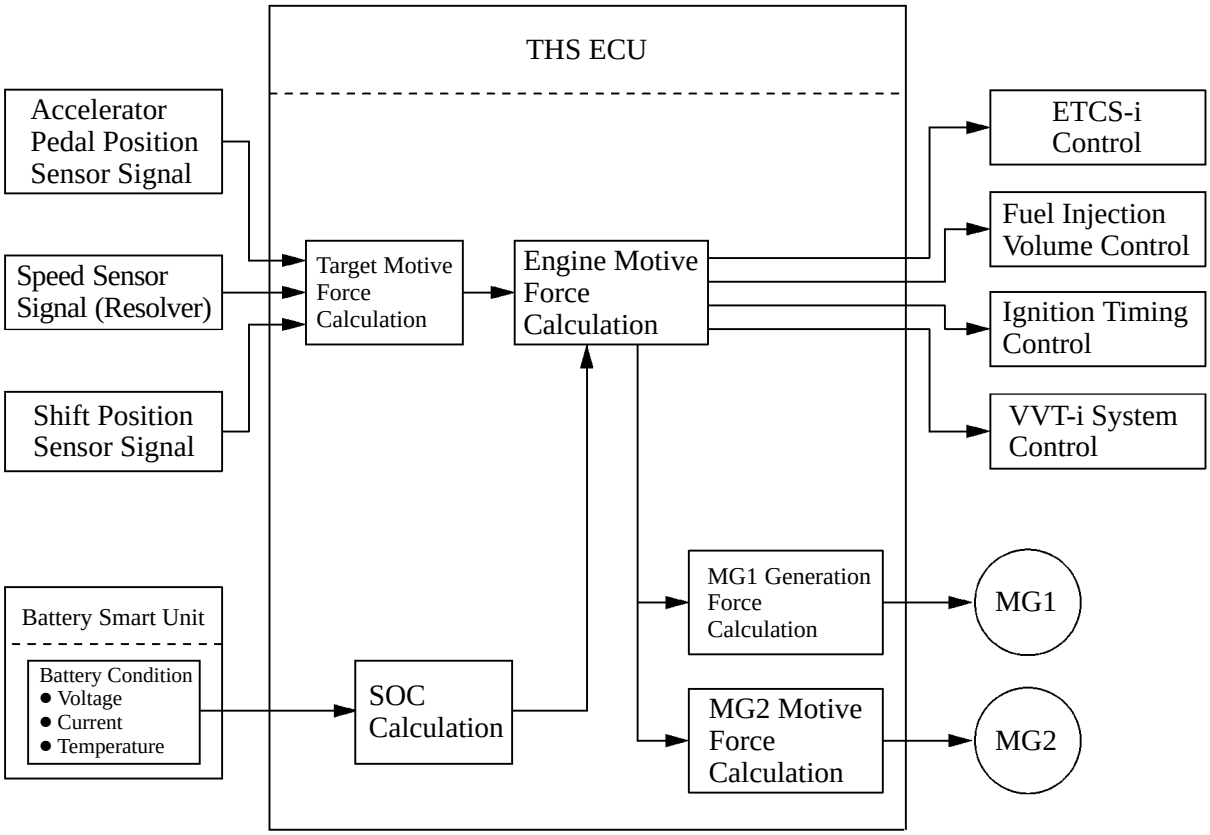

277TH65

Downloaded from www.Manualslib.com manuals search engine

▶ System Diagram ◀

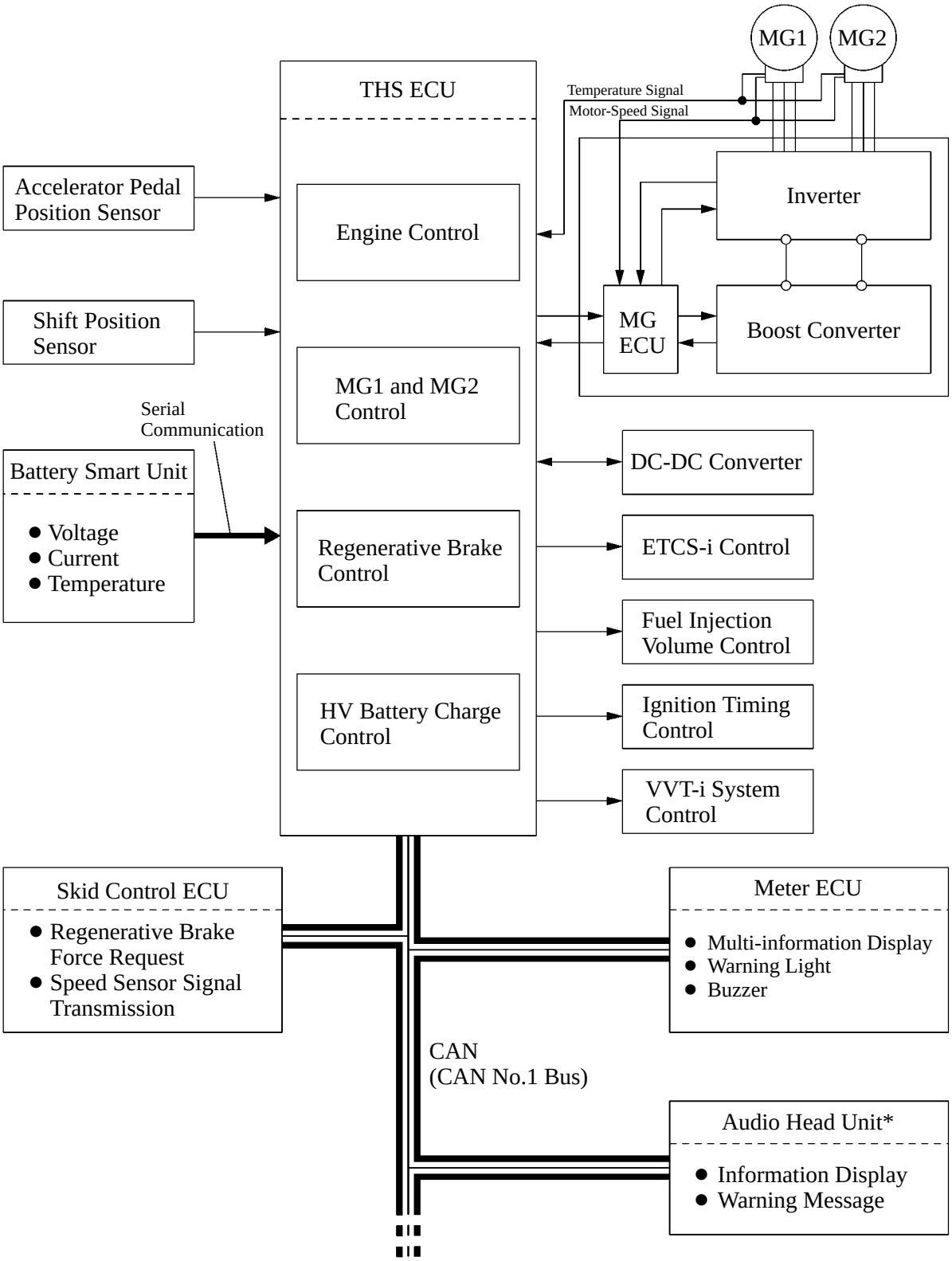

02HTH36Y

*: Optional equipment

Downloaded from www.Manualslib.com manuals search engine

System Monitoring Control

- The THS ECU constantly monitors the SOC (state of charge) of the HV battery. When the SOC is below the lower level, the THS ECU increases the power output of the engine to operate MG1, which charges the HV battery. When the engine is stopped, MG1 operates to start the engine, then the engine operates MG1 to charge the HV battery.
- If the SOC is low, or the temperature of the HV battery module, MG1 or MG2 is higher than the specified value, the THS ECU restricts the motive force applied to the drive wheels until it is restored to the normal value.

Shut Down Control

The MG1 and MG2 are shut down when the shift position is in the N position. This is because MG1 and MG2 must be stopped electrically as a means of shutting down the motive force, since MG2 is mechanically joined to the front wheels.

Downloaded from www.Manualslib.com manuals search engine

SMR (System Main Relay) Control

1) General

The SMR is a relay that connects and disconnects the power source of the high-voltage circuit upon receiving a command from the THS ECU.
A total of three relays are used: one (SMRB) at the positive side, and two (SMRP and SMRG) at the negative side. One (SMRP) of the relays at the negative side is a semiconductor relay, which is integrated in the DC/DC converter. The other two are contact point type relays, which are mounted on the junction box in the HV battery module.

▶ System Diagram ◀

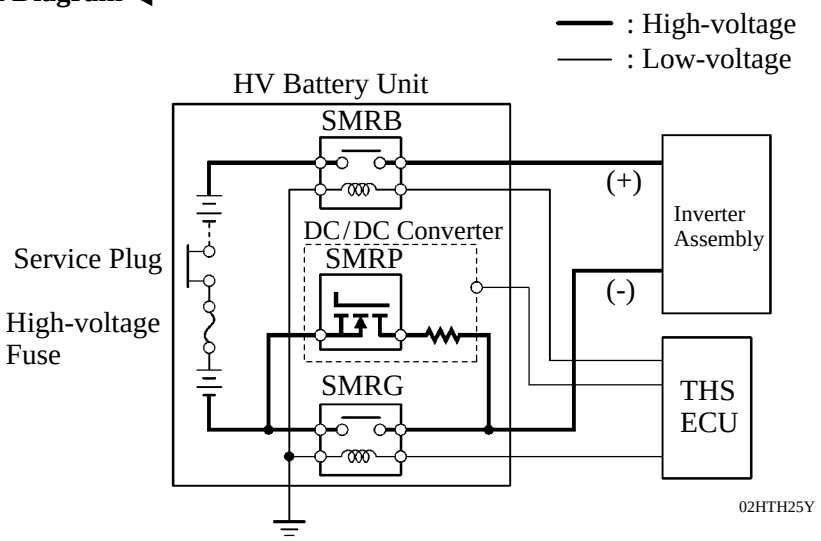

2) Power is ON

The THS ECU turns the SMRB ON. After that, it turns the SMRP ON.
After the THS ECU has turned the SMRG ON, it turns the SMRP OFF.
As the controlled current is initially allowed to pass through a resistor in this manner, the contact point in the circuit is protected from damage that could be caused by a rush current.

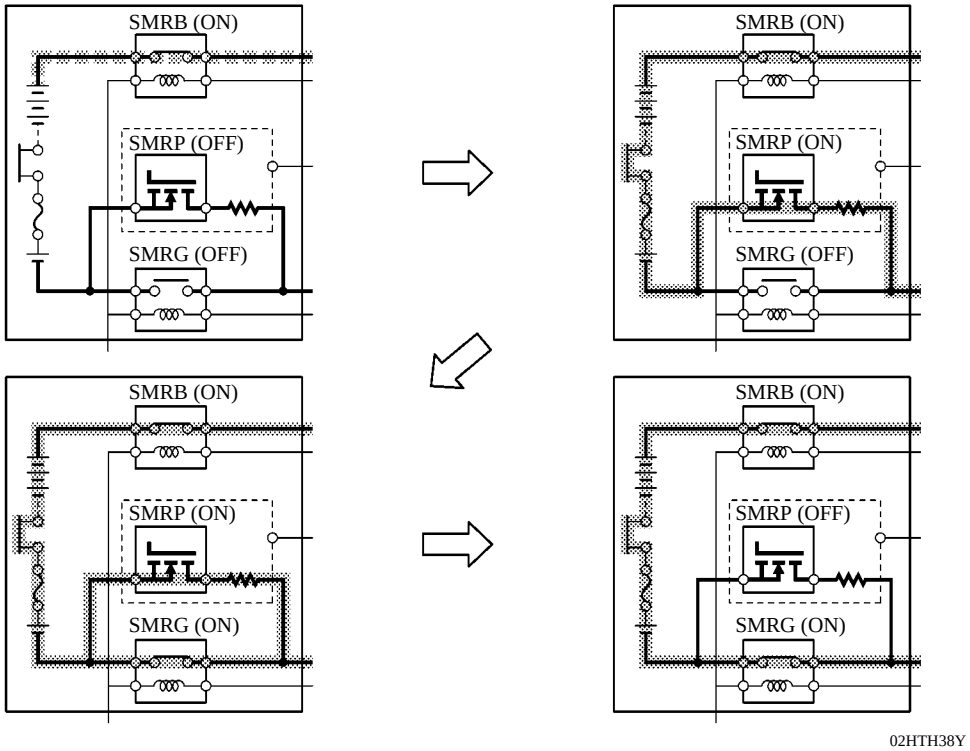

Downloaded from www.Manualslib.com manuals search engine

3) Power is OFF

- First, the THS ECU turns the SMRG OFF. After it has determined whether the contact points of the SMRG are stuck, it turns the SMRB OFF.
- Afterwards, the THS ECU turns the SMRP ON in order to determine whether the contact points of the SMRB are stuck. Then, it turns the SMRP OFF.
- If the THS ECU detects that the contact points are stuck, it illuminates the master warning light and indicates “CHECK HYBRID SYSTEM” on the multi-information display, and stores a DTC (Diagnostic Trouble Code) in memory.

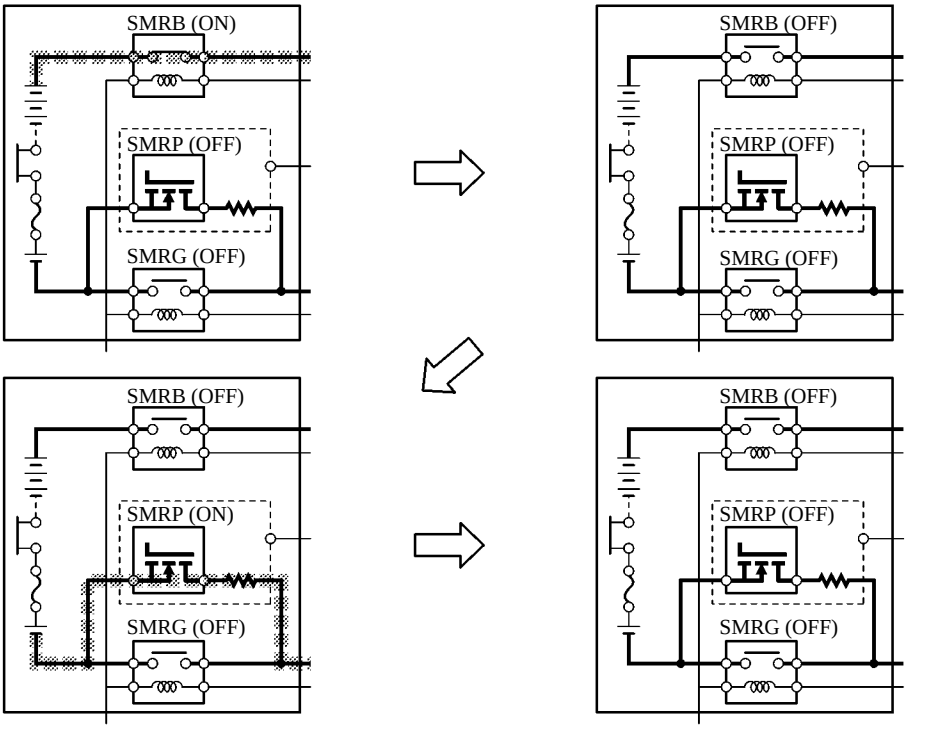

02HTH39Y

SOC Control

- The THS ECU calculates the SOC (state of charge) of the HV battery by estimating its charging and discharging amperages, in order to effect condition control.
- While the vehicle is in motion, the HV battery undergoes repetitive charging/discharging cycles, as it becomes discharged by the MG2 during acceleration and charged by the regenerative brake during deceleration. The THS ECU calculates the SOC based on charging/discharging levels detected by the current sensor. The THS ECU performs the charging/discharging control based on the calculated value in order to steady the SOC at its target level anytime.

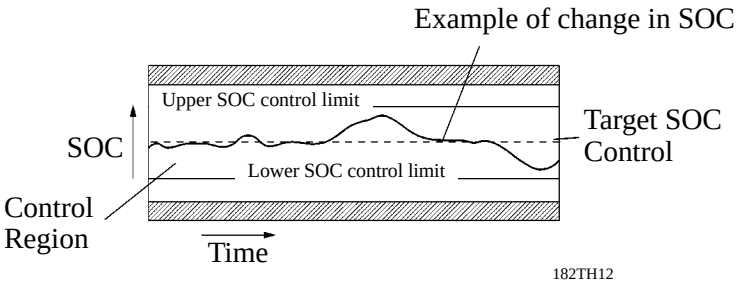

182TH12

Downloaded from www.Manualslib.com manuals search engine

Cooling Fan Control for HV Battery

- The THS ECU monitors rises in the battery temperature through the four temperature sensors in the HV battery module. Then, the THS ECU steplessly actuates the cooling fan under duty cycle control, in order to maintain the temperature of the HV battery module within the specified range.
- While the air conditioning system is operating to cool the cabin, if the HV battery module temperature is within a normal range, the THS ECU turns the battery cooling fan OFF or changes the fan speed to low speed. The purpose of this control is to give priority to cooling down the cabin, which also provides cooling to the battery module through the intake duct located on the center of the rear package tray trim.

▶ System Diagram ◀

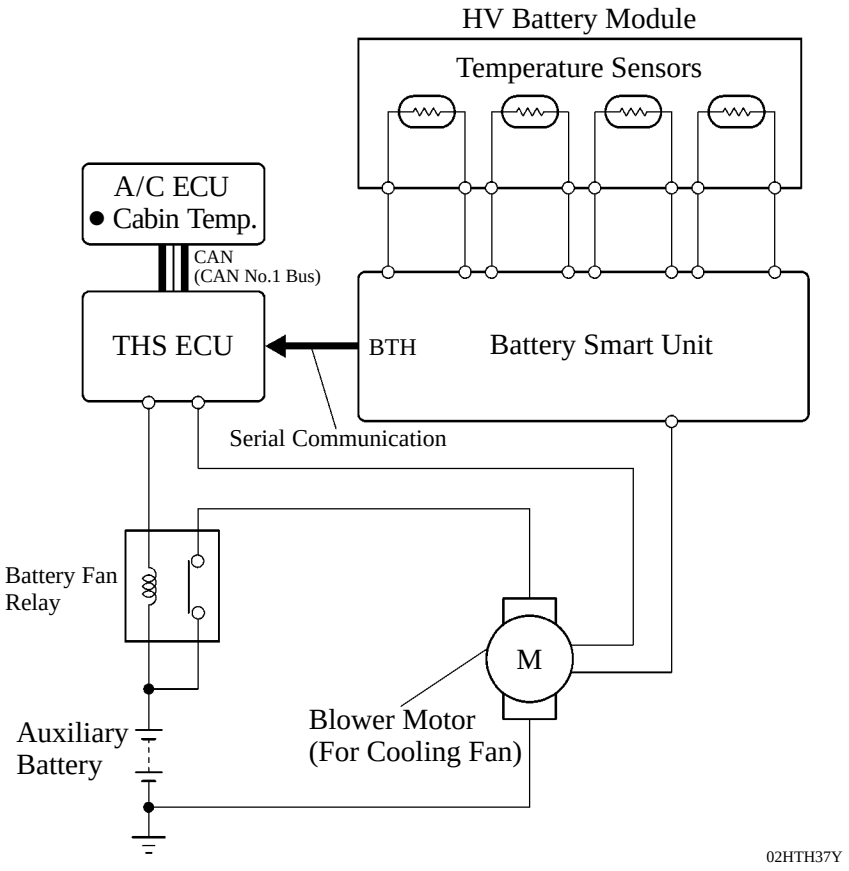

Downloaded from www.Manualslib.com manuals search engine

Auxiliary Battery Charging Control

1) General

The THS ECU controls the DC/DC converter in accordance with the signals from the battery temperature sensor of the auxiliary battery, in order to control the charging voltage to the auxiliary battery.

▶ System Diagram ◀

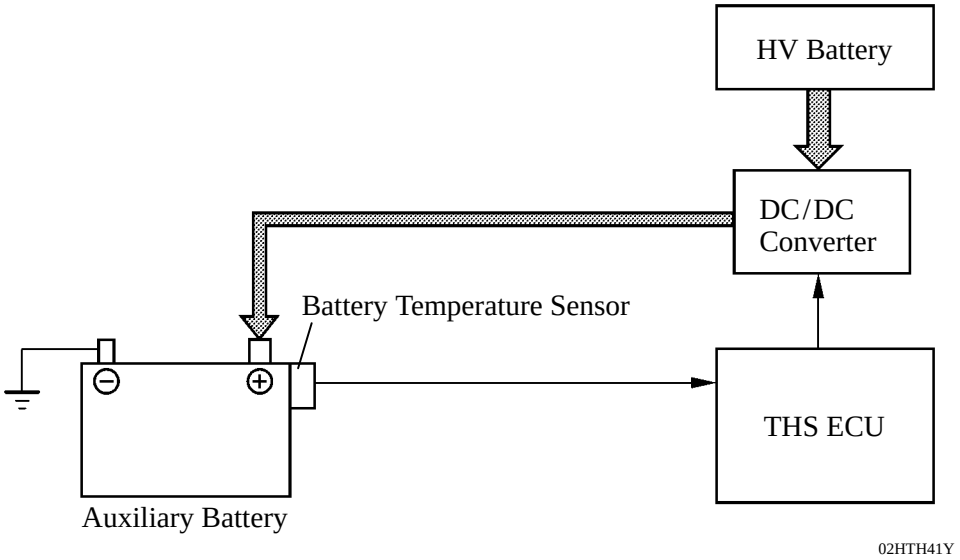

2) Battery Temperature Sensor

The battery temperaturesensor is installed on the battery.
The battery characteristic (battery internal resistance) of taking in current for charging varies according to battery electrolyte temperature. If the electrolyte temperature is too low, the battery internal resistance will increase, resulting in early deterioration. To prevent this, the battery temperature sensor changes its resistance as shown below to detect the temperature.

▶ Characteristic of Battery Temperature Sensor ◀

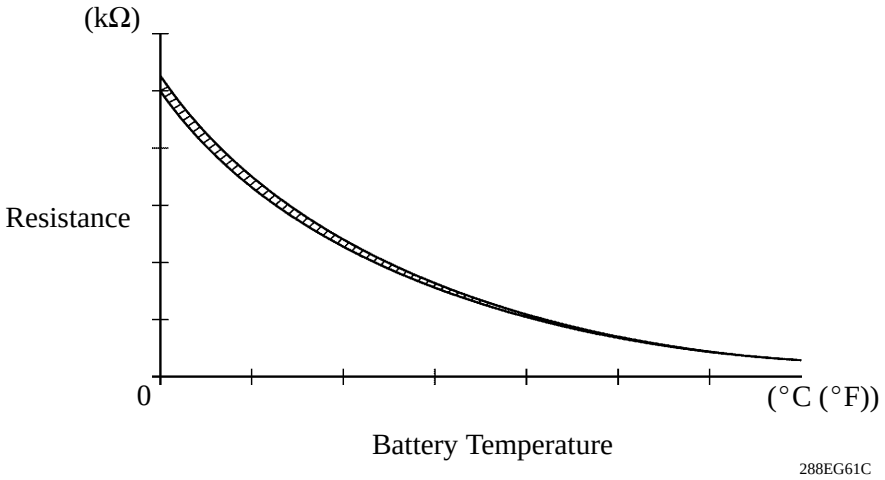

Downloaded from www.Manualslib.com manuals search engine

4. MG1 and MG2 Main Control

General

- MG1, which is rotated by the engine, generates high voltage (alternating current) in order to operate MG2 and charge the HV battery. Also, it functions as a starter to start the engine.
- MG2 is driven by electrical power from MG1 or HV battery, and generates motive force for the front wheels.
- MG2 generate electricity to charge the HV battery (regenerative brake control) during braking, or when the accelerator pedal is not being depressed.
- The MG ECU, which follows the commands of the THS ECU, controls MG1 and MG2 via the IPM (Intelligent Power Module), for driving the vehicle. Six IGBTs (Insulated Gate Bipolar Transistors) switch ON and OFF to control the individual motors in accordance with the driving or generation operation.

Motor Drive Operation

- The illustration below describes the basic control for driving a motor. The IGBTs (Insulated Gate Bipolar Transistors) in the IPM switch ON and OFF to supply a three-phase alternating current to the motor.
- In order to create the motive force required of the motor generator as calculated by the THS ECU, the MG ECU switches the IGBTs ON and OFF and controls the speed, in order to control the speed of the motor generator.

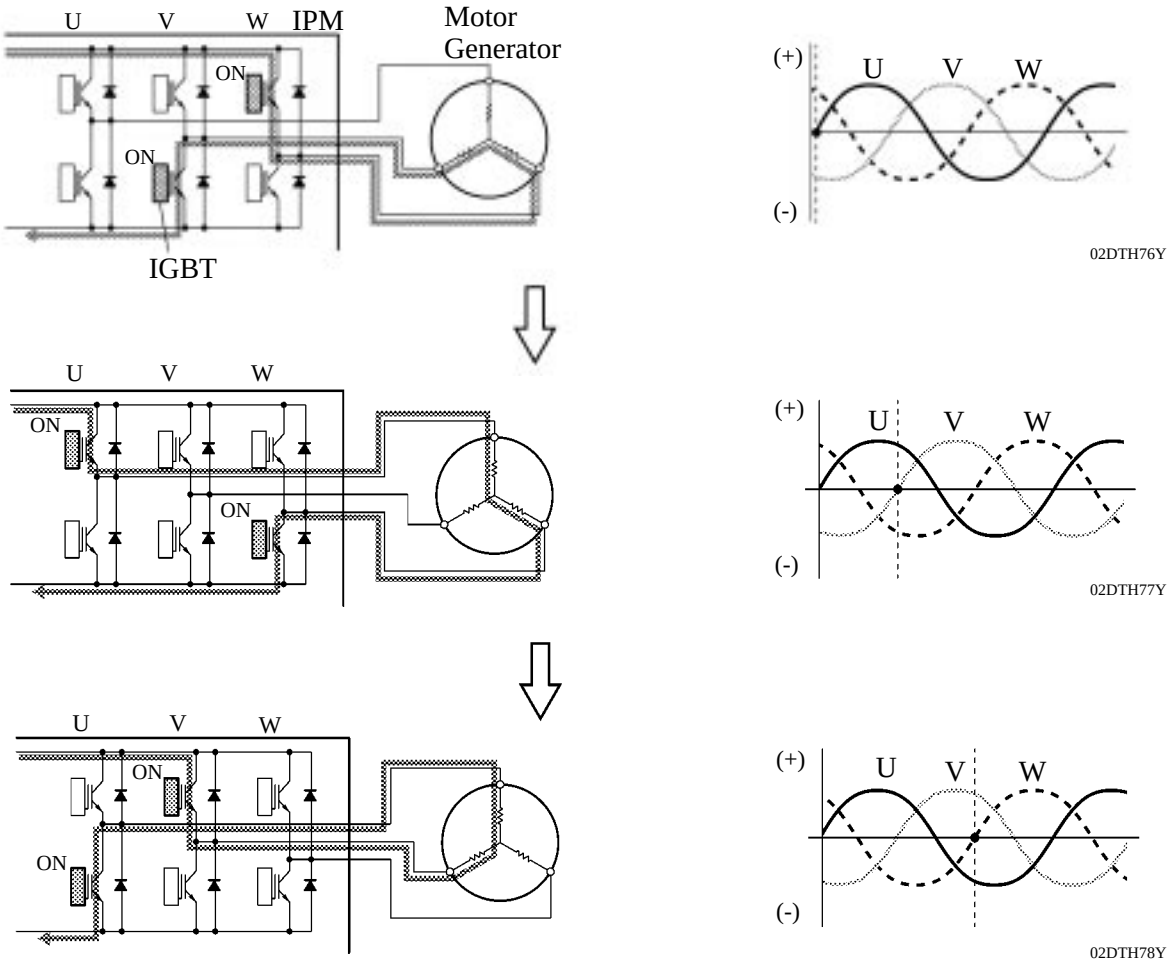

Downloaded from www.Manualslib.com manuals search engine

Motor Generation Operation

The illustration below describes the basic control for the motor to generate electricity. The current that is generated sequentially by the three phases of the motor, which is driven by the wheels, is utilized to charge the HV battery or drive another motor generator.

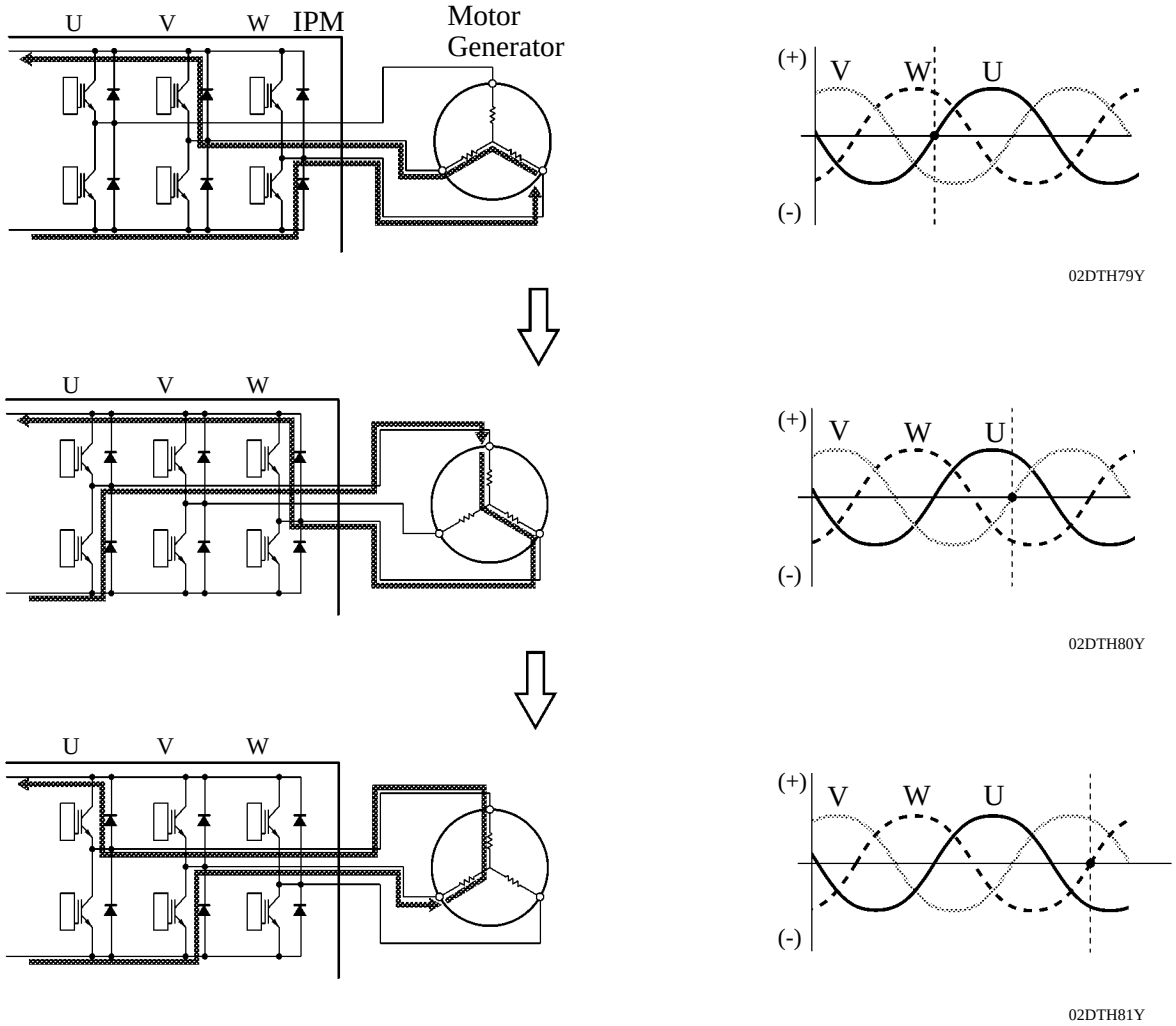

Downloaded from www.Manualslib.com manuals search engine

5. Inverter Assembly Control

General

- The inverter converts the direct current from the HV battery into an alternating current for MG1 and MG2, or vice versa, in accordance with the signals provided by the THS ECU via the MG ECU. In addition, the inverter supplies the alternating current from the MG1 power to the alternating current for MG2. However, the electricity that is supplied by MG1 to MG2 is converted into DC inside the inverter.
- Via the MG ECU, the THS ECU transmits a signal to the power transistor in the inverter for switching the U, V, and W phases of stator coil of MG1 and MG2 based on the rotor position information sent by MG1 and MG2, and the SOC of the HV battery sent by the battery smart unit.
- When the shift lever is in the N position, or the THS ECU has received an over-heating, over-current, or fault voltage signal from the inverter, the THS ECU transmits a shut down control signal to the inverter, in order to disengage the electrical connection to MG1 and MG2.

▶ System Diagram ◀

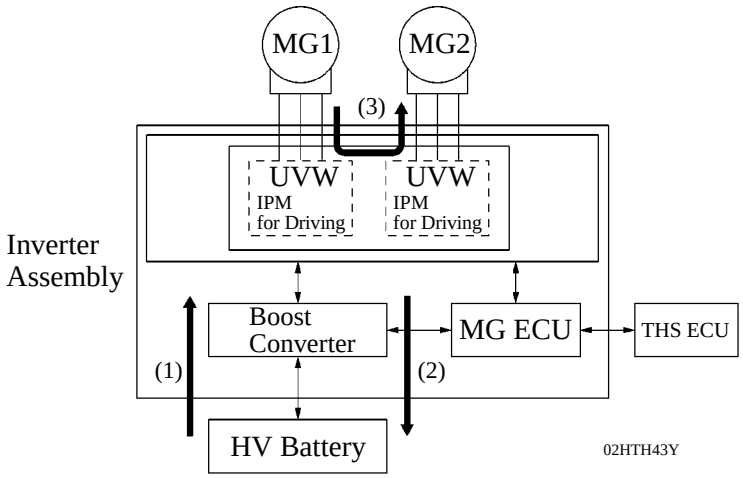

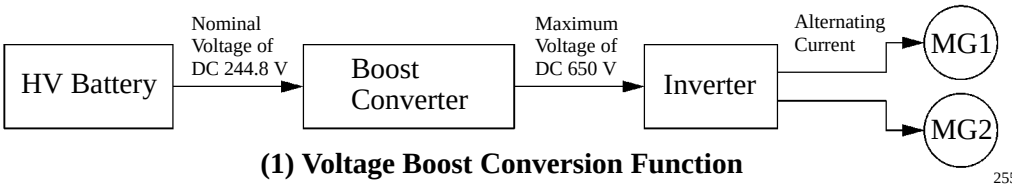

(1) Voltage Boost Conversion Function

255TH70

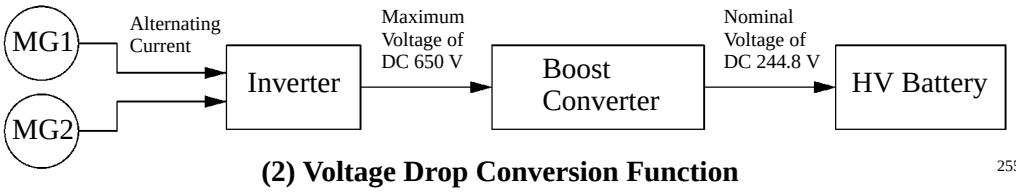

(2) Voltage Drop Conversion Function

255TH71

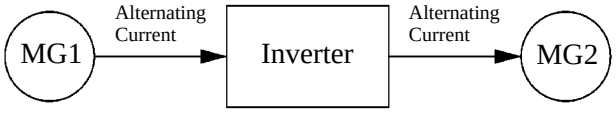

(3) Electrical Power Supply Function

255TH72

Downloaded from www.Manualslib.com manuals search engine

Boost Converter Control

1) General

- The boost converter boosts the nominal voltage of DC 244.8 V (for the HV battery) up to a maximum voltage of DC 650 V, in accordance with the signals provided by the THS ECU via the MG ECU.
- The inverter converts the alternating current generated by MG1 or MG2 into a direct current. The boost converter drops the maximum voltage of DC 650 V to nominal voltage of DC 244.8 V (for the HV battery) in accordance with the signals provided by the THS ECU via the MG ECU.
- The boost converter consists of a boost IPM (Intelligent Power Module) with built-in IGBTs (Insulated Gate Bipolar Transistors) that effect switching control, and a reactor that stores (and charges) electrical power.

2) Voltage Boost Conversion Function

- The function of the boost converter to boost the nominal voltage of the HV battery from DC 244.8 V to maximum voltage of DC 650 V flows as described below.
- The IGBT (2) turns ON, causing the electrical power of the HV battery (nominal voltage of DC 244.8 V) to charge the reactor. As a result, the voltage in the reactor rises.

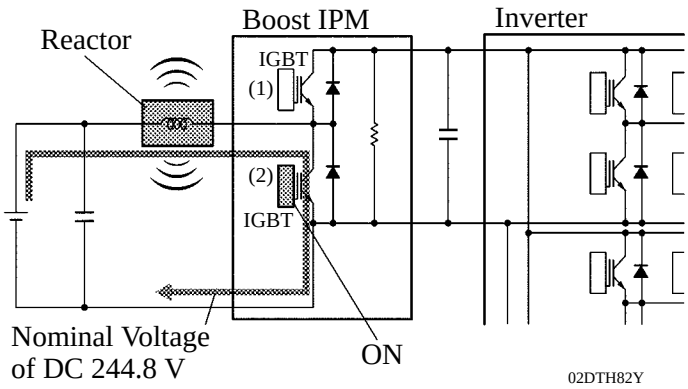

- In the next stage, when the voltage in the reactor rises to maximum voltage of DC 650 V, the IGBT (2) turns OFF, causing a counter electromotive force to be created.
- Induced by the counter electromotive force that is created, the electrical power (maximum voltage of DC 650 V) that is charging the reactor flows into the inverter.

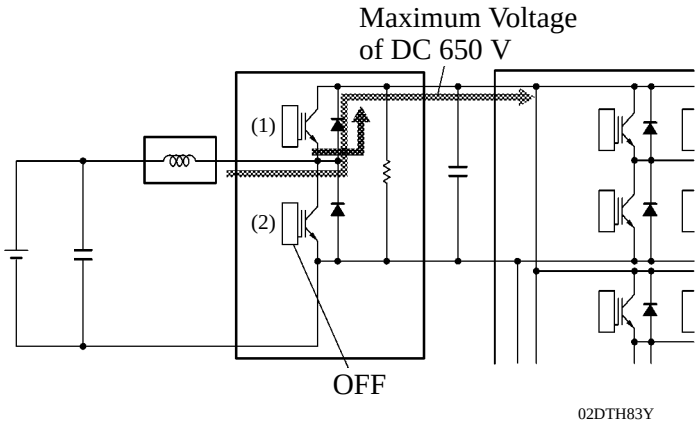

Downloaded from www.Manualslib.com manuals search engine

3) Voltage Drop Conversion Function

The alternating current, which is generated by MG1 or MG2 for the purpose of charging the HV battery, is converted into maximum voltage of DC 650 V by the inverter. Then, a function of the boost converter drops the voltage to nominal voltage of DC 244.8 V. This is accomplished by the IGBT (1) switching ON and OFF through duty cycle control, which intermittently interrupts the electrical power provided by the inverter.

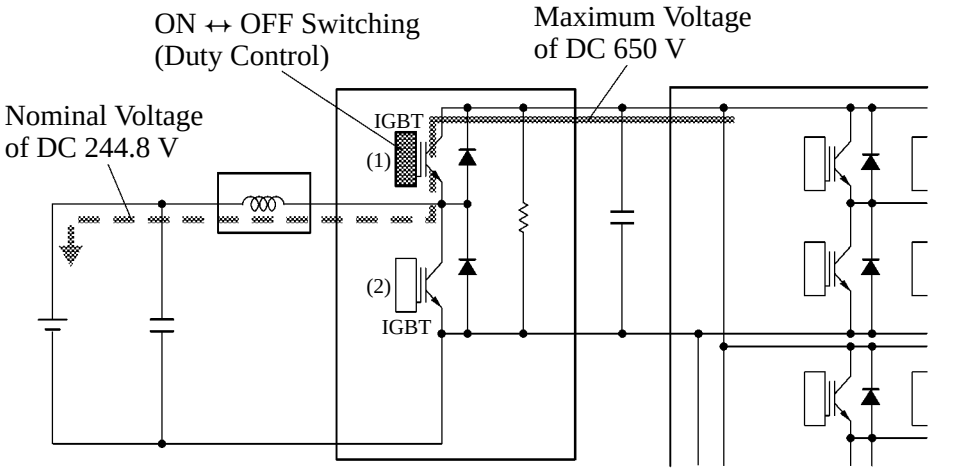

02DTH74Y

Downloaded from www.Manualslib.com manuals search engine

6. Skid Control ECU Control

- The skid control ECU calculates the total braking force needed, based on the master cylinder pressure in the brake actuator and brake pedal stroke sensor generated when the driver depresses the brake pedal.
- The skid control ECU computes a part for the required regeneration brake force from the total braking force, and sends the result to the THS ECU.
- The THS ECU executes to the minus torque to MG2, and carries out the regenerative brake functions. The skid control ECU controls the brake actuator solenoid valves and generates the wheel cylinder pressure, which is the actual regenerative brake control value subtracted from the total braking force.
- The skid control ECU outputs a request to the THS ECU to effect motor traction control while the vehicle is operating under TRAC or VSC function control. The THS ECU controls the engine, MG1, and MG2 in accordance with the present driving conditions in order to suppress the motive force.

▶ System Diagram ◀

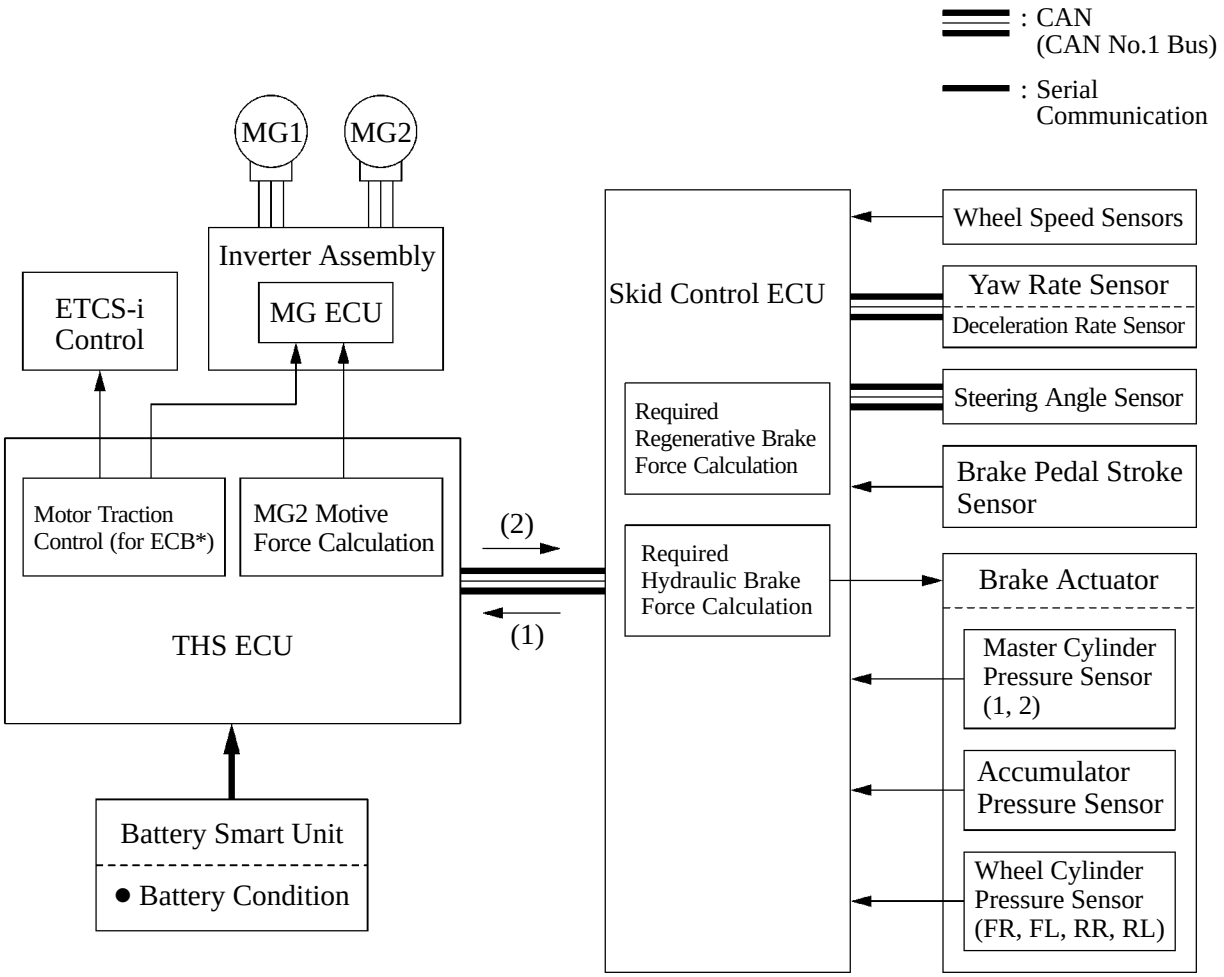

(1) : ● Required regenerative brake force
● Required motive force (for TRAC or VSC Function)
(2) : ● Actual Regenerative Brake Control Value

02HTH46TE

*: ECB (Electronically Controlled Brake System)

Downloaded from www.Manualslib.com manuals search engine

7. Battery Control

- The battery smart unit detects and transmits the HV battery condition signals (voltages, currents, and temperatures), which are used to determine charging or discharging values, to the THS ECU.
- The battery smart unit also detects and transmits the cooling fan voltage signals which are necessary to effect cooling fan control, to the THS ECU.
- A leak detection circuit is provided in the battery smart unit in order to detect any excessive current draw from the HV battery.

▶ System Diagram ◀

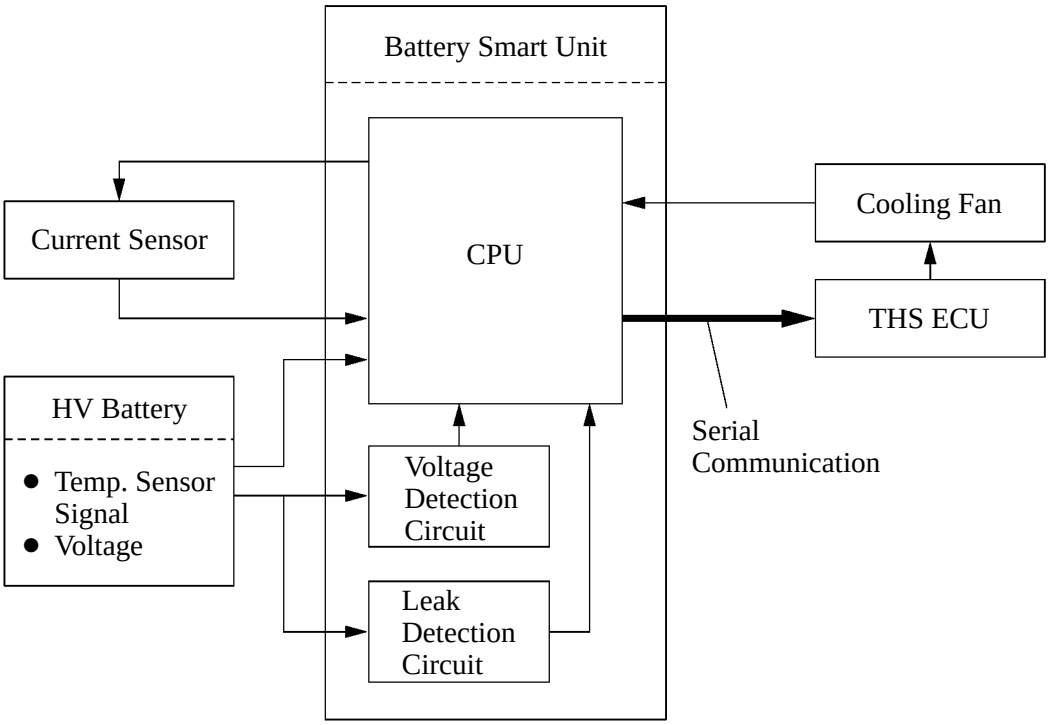

02HTH47TE

Downloaded from www.Manualslib.com manuals search engine

8. During Collision Control

General

If the vehicle encounters one of the situations described below, the THS ECU will shut down the entire power supply by turning the SMR (System Main Relay) OFF, in order to ensure safety.

- The THS ECU receives an airbag deployment signal from the airbag sensor assembly during a frontal collision, or side collision.
- The THS ECU receives an actuation signal for the circuit breaker sensor, which is provided in the inverter, during a frontal collision.

▶ System Diagram ◀

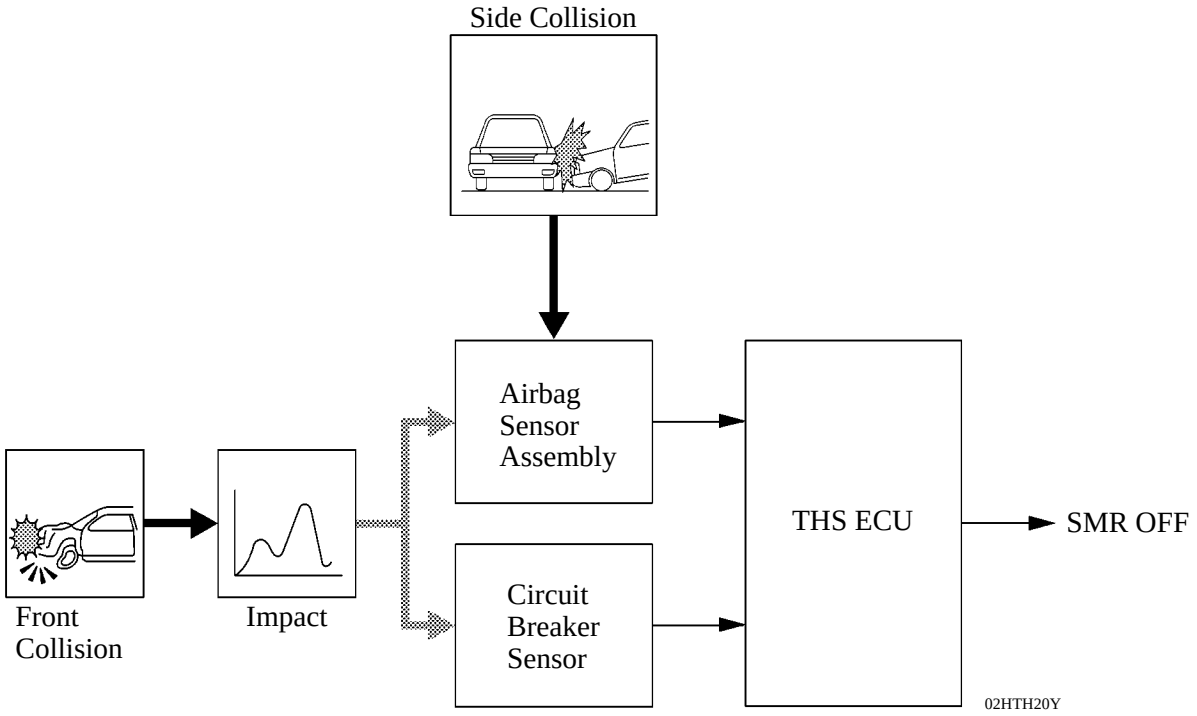

Layout of Main Components

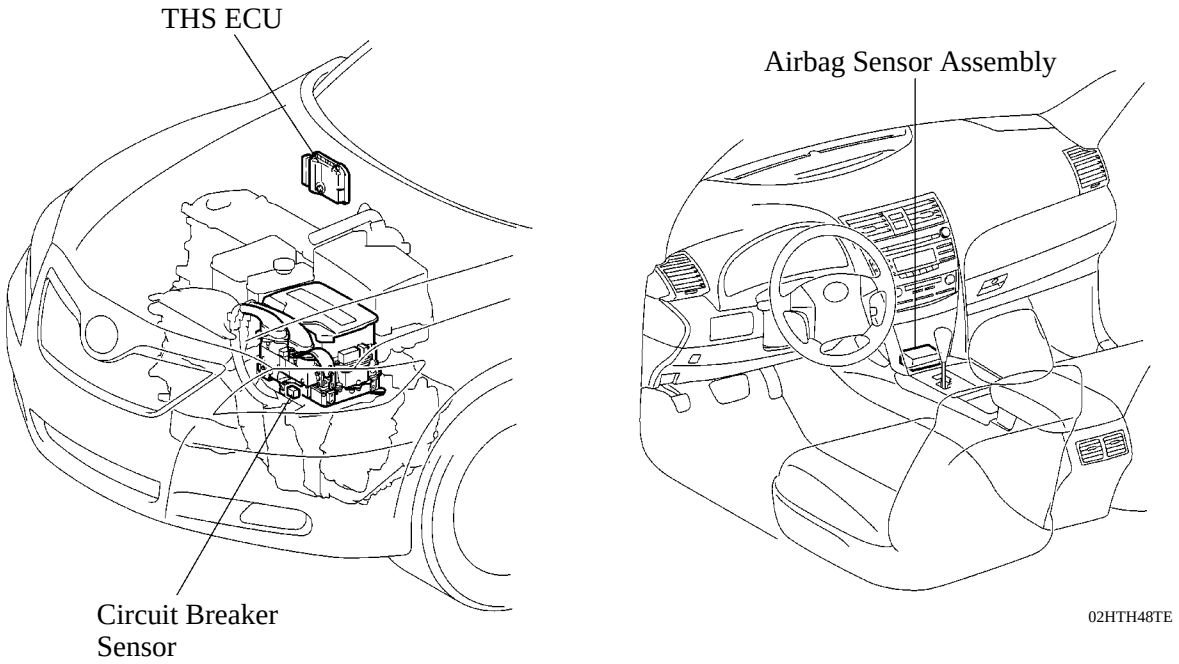

Downloaded from www.Manualslib.com manuals search engine

9. Indicator and Warning Light Illumination Control

Energy Monitor

- On the ’07 Camry Hybrid model, the multi-information display located on the combination meter has a function to display the energy flow, which enables the driver to monitor the driving conditions of the vehicle. The energy flow, which appears in the form of an arrow, also shows the SOC (state of charge) of the HV battery in 8 levels.

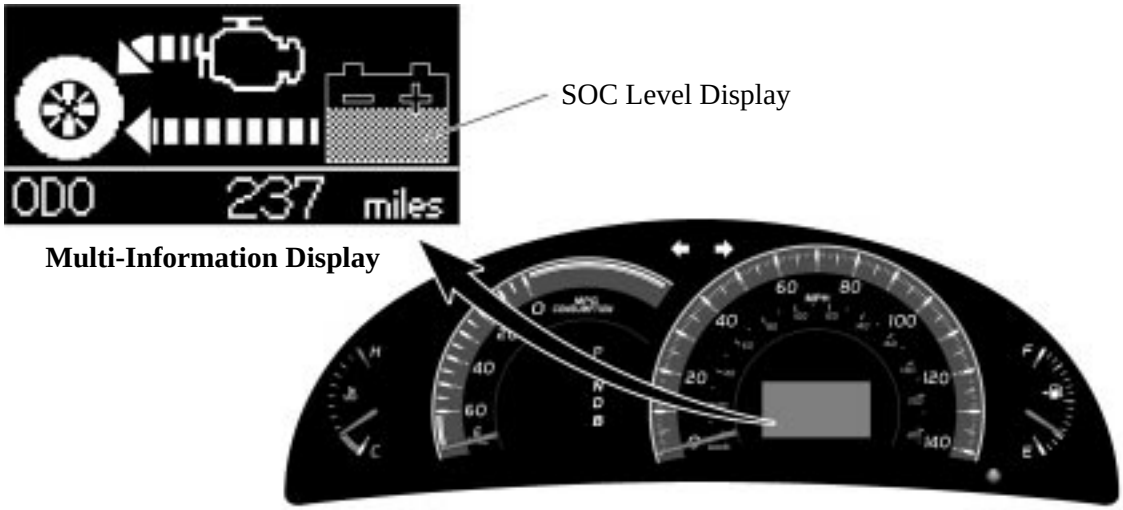

02HTH49Y

- A radio and player with display, which is available as optional equipment, has a function to display the energy flow with a style that differs from the multi-information display. This display also shows the energy flow in the form of an arrow, and shows the SOC (state of charge) of the HV battery in 8 levels.

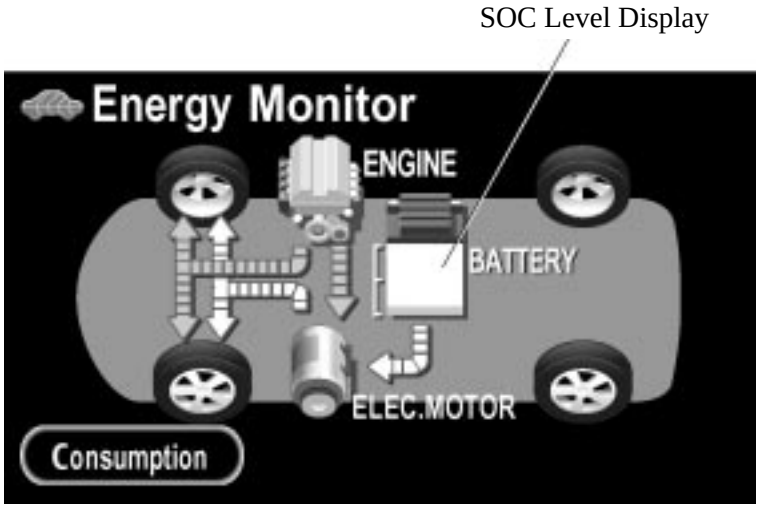

02HTH50Y

Downloaded from www.Manualslib.com manuals search engine

Indicator and Warning Light

1) Combination Meter

In particular, the indicator and warning lights associated with the THS II are described below.

Item	Outline
READY Light	This light blinks when the driver simultaneously presses the brake pedal and turns on the power switch while the shift lever is in the P position. Thereafter, the light changes to illumination when the system starts, thus informing the driver that the vehicle is drivable.
Master Warning Light	The primary function of this warning light, which illuminates simultaneously with the sounding of a warning buzzer, is to inform the driver in case of a malfunction in the THS II system or other systems, or when the SOC of the HV battery is lower than the standard.
Malfunction Indicator Lamp	Turns on when there is a malfunction in the engine control system.
Discharge Warning Light	Turns on when there is a malfunction in the DC 12 V charging system (converter assembly).

Downloaded from www.Manualslib.com manuals search engine

2) Multi-Information Display

- This warning display indicates to the driver that the SOC is lower than the minimum standard value (%). At the same time, the master warning light blinks and the buzzer sounds.

02HTH52TE

Multi-Information Display

- This warning display indicates to the driver that a malfunction has occurred in the THS II system. At the same time, the master warning light illuminates and the buzzer sounds. However, these are inactive for 5 seconds after the power source is turned to IG ON.

02HTH53TE

Multi-Information Display

- This warning display indicates to the driver that the temperatures of any parts related to the THS II system exceed the standard value. At the same time, the master warning light illuminates and the buzzer sounds.

02HTH54TE

Multi-Information Display

3) Multi-Information Display and Radio and Player with Display

- Under the condition described below, the message prompt shown on the left below appears on the multi-information display screen. In addition, when the radio and player with display is fitted (only on models with the navigation with AV system), the caution message shown on the right below appears on that screen as well. These messages are accompanied by the blinking of the master warning light and continuous sounding of the buzzer.

◆ The READY light is illuminated, the shift position is in the N position, and the HV battery is discharged.

02HTH55TE

Multi-Information Display

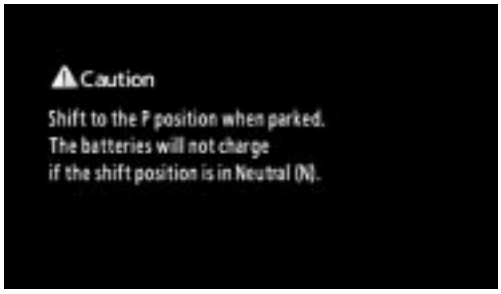

02HBE49Y

Radio and Player with Display

Downloaded from www.Manualslib.com manuals search engine

10. Diagnosis

- In the THS II, if the THS ECU detects a malfunction, the ECU performs a diagnosis and memorizes failed sections. Furthermore, to inform the driver of the malfunction, the ECU illuminates or blinks the MIL (Malfunction Indicator Lamp), master warning light, which pertains to the ECU.
- The THS ECU will restore the respective DTC of the malfunctions.
- Three-digit information codes have been provided in the conventional DTC as subset of a primary five-digit code. This enables the troubleshooting procedure to further narrow down a trouble area to identify a problem.
- The DTC can be accessed through the use of the hand-held tester with CAN VIM (Dedicated adapter).

For details, refer to the 2007 Camry Hybrid Vehicle Repair Manual (Pub. No. RM02H0U).

11. Fail-Safe

If the THS ECU detects a malfunction in the THS II, it will control the system in accordance with the data that is stored in its memory.
For details, refer to the 2007 Camry Hybrid Vehicle Repair Manual (Pub. No. RM02H0U).

Downloaded from www.Manualslib.com manuals search engine

EXTERIOR APPEARANCE

Front View

02HMO01TE

Rear View

02HMO02TE

Downloaded from www.Manualslib.com manuals search engine

MODEL CODE

AHV40	L	-	A	E	X	G	B	A
1	2		3	4	5	6	7	8

1	BASIC MODEL CODE
	AHV40: With 2AZ-FXE Engine

2	STEERING WHEEL POSITION
	L: Left-Hand Drive

3	MODEL NAME
	A: Camry

4	BODY TYPE
	E: 4-Door Sedan

5	GEAR SHIFT TYPE
	X: Automatic, Floor

6	GRADE
	G: —

7	ENGINE SPECIFICATION
	B: Atkinson

8	DESTINATION
	A: U.S.A.

MODEL LINE-UP

Destination	Engine	Body Type	Grade	Transaxle
				P311
U.S.A.*	2AZ-FXE	4-Door	—	AHV40L-AEXGBA

*: Package options for Canada is included.

Downloaded from www.Manualslib.com manuals search engine

EXTERIOR

Front View

- Dynamic modernism has been produced by providing a solid-looking hood shape from the front grille to the center of the hood and framing the hood with the left and right fenders.
- The front design, with minimum surface boundaries between the hood, grill, top mark and bumper, stretches out from the impressively projecting top mark and incorporates a coated front grill to make it distinctive from gasoline engine models.
- The headlights have a long, narrow design, which incorporates two accent lines, producing a crystal-like texture and boldness. The headlight extensions have been given a blue smoked coating to improve the quality of the vehicle and to make it distinctive from gasoline engine models.

02HMO03TE

02HMO04TE

Rear View

- Power and modernity have been produced by providing a solid-looking body shape from the luggage door to the center of the bumper and framing the luggage door with the left and right fenders.
- The edge of the rear combination light has been extended further into the side of the body, and the inner lens portion is ingot-effect white, expressing modernity and width.
- The taillight & stop light have been designed using LEDs (Light Emitting Diodes) to make the vehicle more distinctive and to reduce power consumption.

02HMO05TE

02HMO06TE

Downloaded from www.Manualslib.com manuals search engine

Side View

In order to express a dynamic 3-dimensional form, the extruded front and rear fender shapes have been incorporated into the body design, which is based on straight lines.

02HMO07TE

Tire & Disc Wheel

Tire	Size	P215/60R16
Disc Wheel	Size	16 x 6 1/2 J
	Material	Aluminum with Center Ornament
	P.C.D.*	114.3 mm (4.5 in.)
	Off Set	45 mm (1.8 in.)
Wheel Design		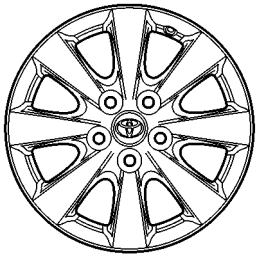 025MO14Y

*: Pitch Circle Diameter

Exterior Color List

Color No.	Color Name	Color No.	Color Name
040	Super White 2	4Q2	Beige Mica Metallic
1D4	Silver Metallic	6U6	Light Green Metallic
1G3	Gray Metallic	776	Turquoise Mica Metallic
202	Black	8S4	Light Blue Metallic
3R3	Red Mica Metallic	8T5	Dark Blue Mica

Downloaded from www.Manualslib.com manuals search engine

INTERIOR

Instrument Panel

A light, sporty and open feel has been achieved with lines that flow from the center cluster to both left and right, seemingly floating on the instrument panel lower.

02HMO10TE

Center Cluster

- The center cluster has been designed to be fresh and clear. By making the LCD (liquid Crystal Display) screen larger and putting the screen and the switches closer together, both ease of use and freshness have been achieved.
- Light is emitted by the entire panel at night, creating a fresh atmosphere.

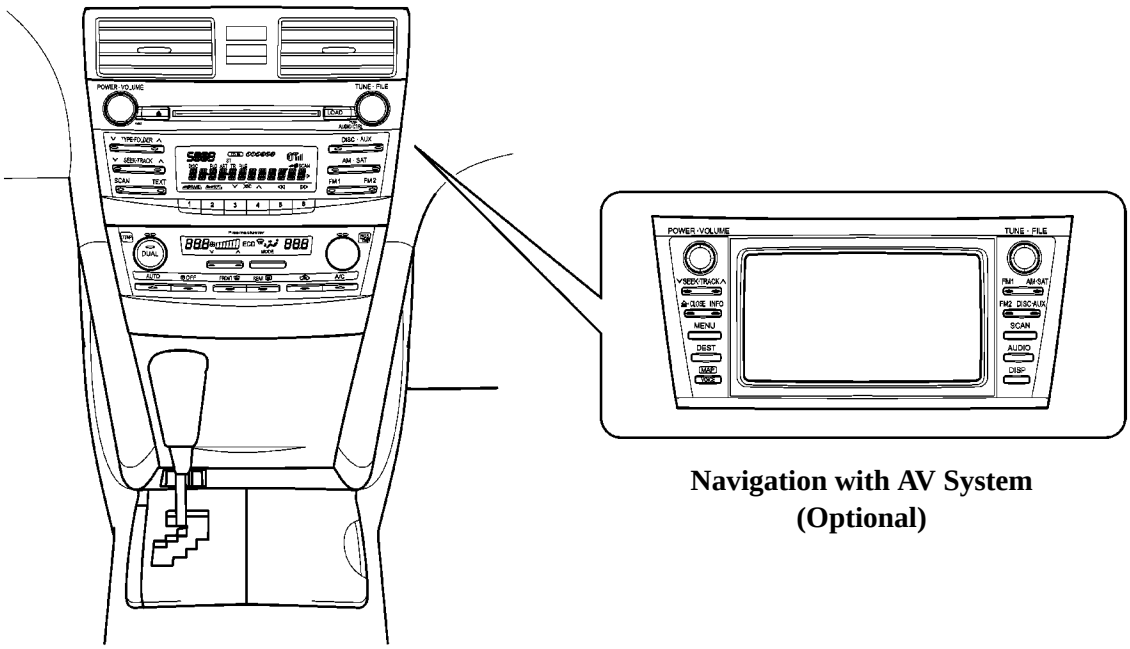

Navigation with AV System (Optional)

Center Cluster (Standard)

02HMO11TE

Downloaded from www.Manualslib.com manuals search engine

Combination Meter

- A large 4-meter type optitron meter that is exclusive to hybrid models is used.
- The meters include a fuel expenses meter and, in combination with the blue meter rings, create a clean look. The brightness of the meter rings has 4 levels and increases in accordance with improvements in the average fuel economy since the THS II (Toyota Hybrid System II) started.
- The multi-information display is provided in the center of the speedometer.
- The multi-information display indicates warnings, DTC (Diagnosis Trouble Code), the odo/tripmeter, cruise information (outside temperature, driving range etc.) and the energy monitor (energy flow and Eco drive level).
- A step-by-step illumination function welcomes the entry of the driver.

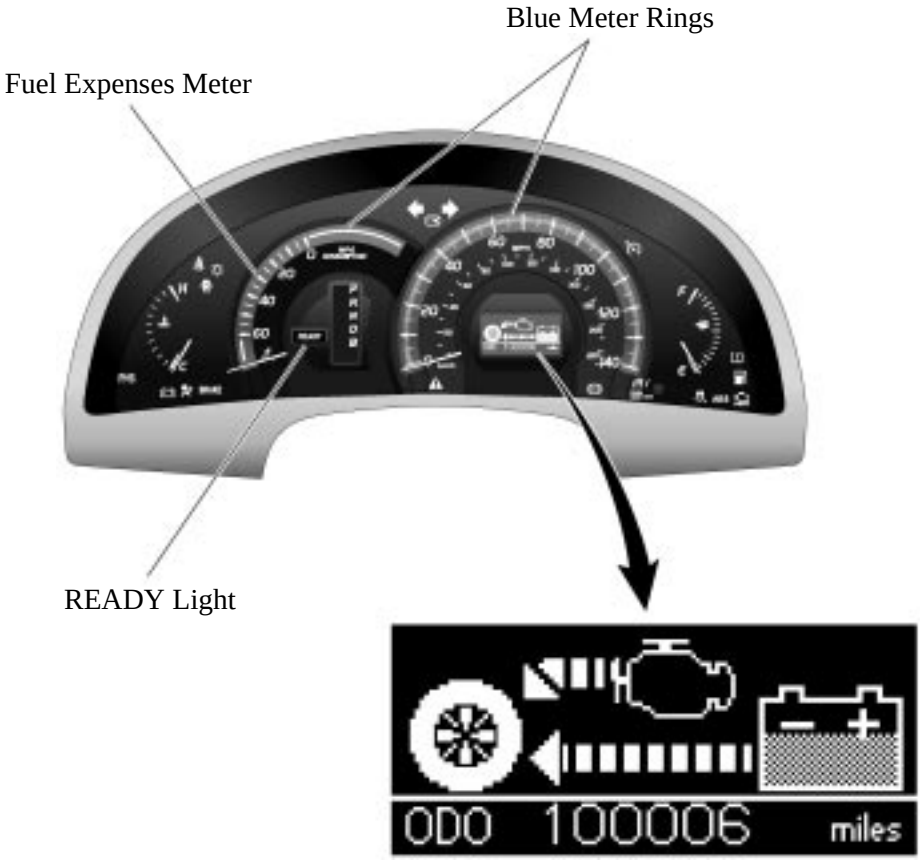

Multi-information Display (Energy Flow)

02HMO13TE

Downloaded from www.Manualslib.com manuals search engine

Shift Lever

- A 5-position (P, R, N, D, and B) gate type floor shift lever is used.
- A leather covered shift knob is used.

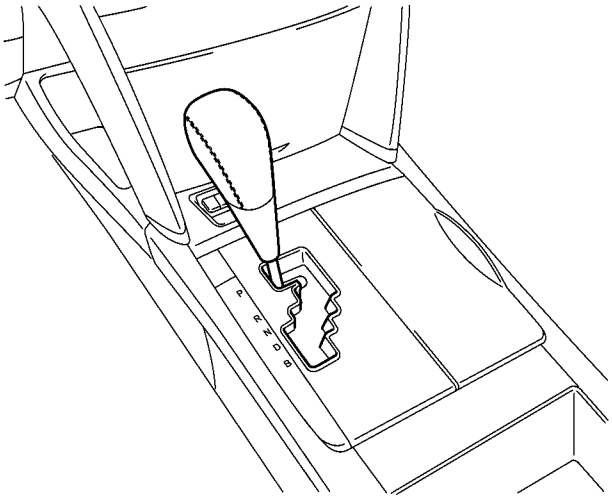

Gate Type Floor Shift Lever

02HMO12Y

Steering Wheel

- A 4-spoke leather-wrapped steering wheel is provided.
- A newly designed steering pad switch is used, which allows the audio system, automatic air conditioning system, multi-information display, telephone and navigation voice recognition systems to be easily operated.
- The cruise control switch has been incorporated into the steering wheel for ease of operation.

Design	4-Spoke Leather-wrapped 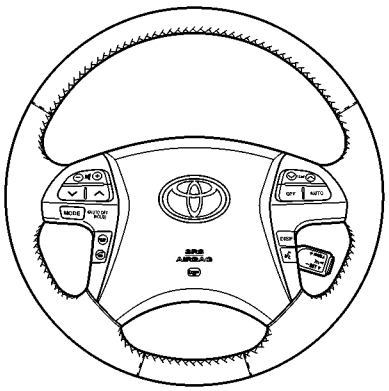 025MO24Y

Downloaded from www.Manualslib.com manuals search engine

Rear Seat

A fold-down function has been provided for the rear seat. By allowing the seat lock to be released from the trunk compartment, convenience has been improved.

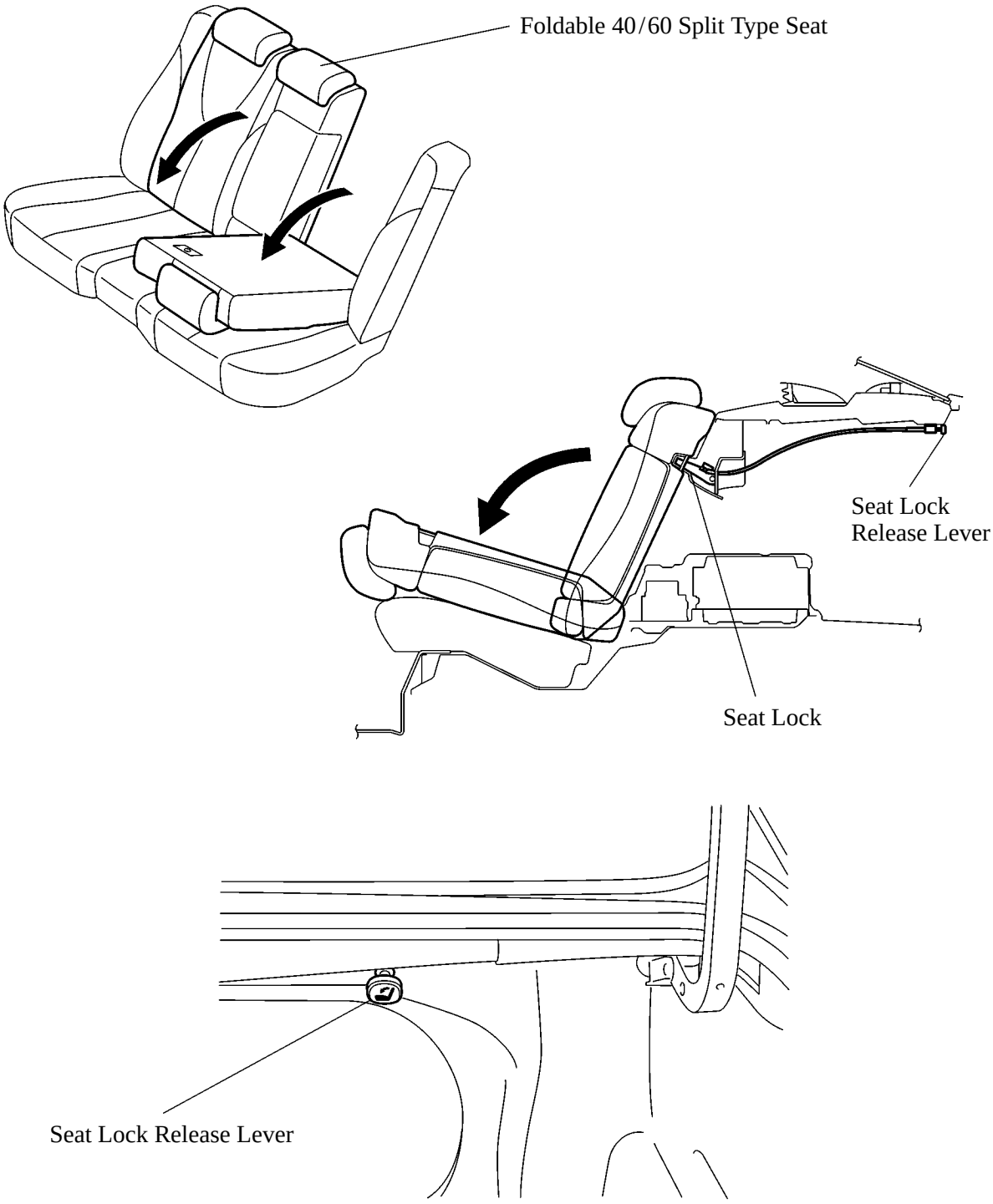

02HMO23Y

Downloaded from www.Manualslib.com manuals search engine

EQUIPMENT

THS II (Toyota Hybrid System II)

- The ’07 Camry Hybrid model is powered by a THS II (Toyota Hybrid System II), which has been developed under a “Hybrid Synergy Drive” concept to pursue better environmental performance and to realize “fun to drive” feeling. Under this concept, the THS II has achieved significant advances in control systems, which aim for synergy between the power of the motor and the power of the engine. By greatly boosting the power supply voltage, this system has achieved a high level of balance between environmental performance and power.
- This hybrid system consists of a high efficiency 2AZ-FXE engine and a high speed, high power output MG2 (Motor Generator No.2), which cooperate optimally through a hybrid transaxle that excels in transmission performance. Furthermore, this system uses a high-output HV battery with a nominal voltage of DC 244.8 V, which is supplied to MG1 (Motor Generator No.1) and MG2 by a variable-voltage system. The variable-voltage system has a boost converter, which boosts the operating voltage of the system to a maximum voltage of DC 650 V, and an inverter, which converts it into an alternating current.
  Through these elements, the dynamic performance of a class above has been realized, in addition to realizing a high level of regenerative capability. Together with the highly efficient cooperative control of the engine and the motor, a dramatic fuel economy performance has been realized.

▶ Main Components ◀

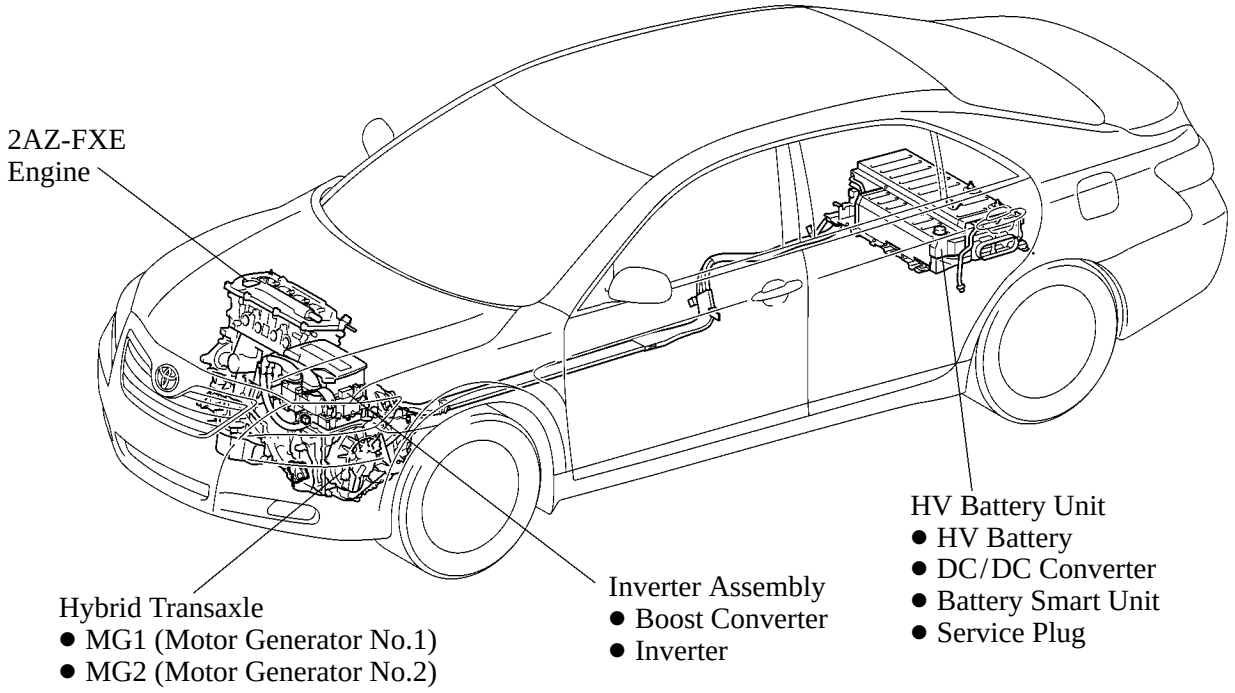

Downloaded from www.Manualslib.com manuals search engine

Navigation with AV System

Navigation System

- Through the use of the GPS (Global Positioning System) and the map data in a DVD (Digital Versatile Disc), the navigation with AV (Audio Visual) system analyzes the position of the vehicle and indicates that position on the map that is displayed on the screen. Additionally, it provides voice instructions to guide the driver along the route to reach the destination that has been selected.
- The language of the voice navigation can be selected from among 3 languages: English, French and Spanish.
- The navigation system employs a voice recognition function with a voice recognition microphone installed in the overhead console. The voice recognition function can be turned on and off using the switch on the steering wheel.
- The display, which consists of a wide 7.0 inches LCD (Liquid Crystal Display) screen with a pressure sensitive touch panel, is easier to use.

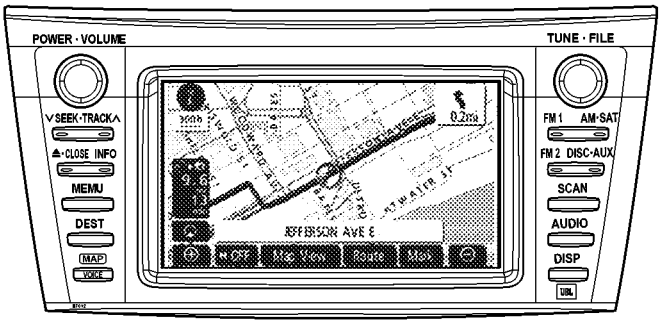

025MO28Y

Downloaded from www.Manualslib.com manuals search engine

Energy Monitor Screen

- The following screens can be displayed on the LCD of the AV system: energy monitor screen and fuel consumption screen.
- The energy monitor screen indicates the current energy transmission direction and the SOC (state of charge) of the battery.
- The fuel consumption screen indicates the current fuel consumption and the past average fuel consumption using graphs.

02HMO14Y

Energy Monitor Screen

02HMO15Y

Fuel Consumption Screen
(For U.S.A.)

Downloaded from www.Manualslib.com manuals search engine

Audio System

- The large and varied original LCD panels and large switched have been provided for each audio head unit, improving visibility and ease of use.
- JBL's Premium Sound System, consisting of their stereo amplifier and speaker system, has been provided as standard.

Audio Head Unit

The 2 types of audio head unit are available.

Application	Design	Specifications
Standard	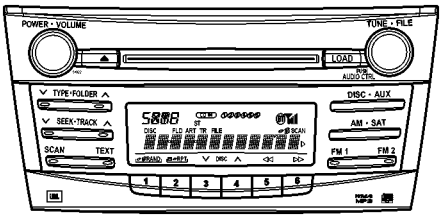 025MO30Y	● AM/FM Tuner ● In-dash 6-CD Changer (MP3, WMA Compatible*1) ● Bluetooth® Hands-free System ● RBDS*2 Function/DSP*3/ASL*4 ● JBL Stereo Amplifier ● 8-Speaker System ● Maker: Panasonic & JBL
Option	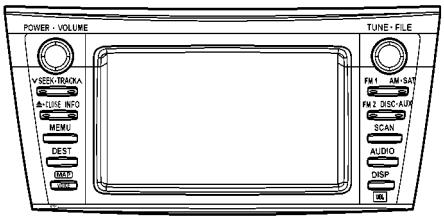 025MO31Y	● 7.0-inch Display ● AM/FM Tuner ● In-dash 4-CD Changer (MP3, WMA Compatible*1) ● Bluetooth® Hands-free System ● RBDS*2 Function/DSP*3/ASL*4 ● JBL Stereo Amplifier ● 8-Speaker System ● Maker: DENSO & JBL

*1: Compatible with the compressed sound and music files complying with MP3 (MPEG Audio Layer-3) standard and WMA (Windows Media Audio)
*2: Radio Broadcast Data System
*3: Digital Sound Processor
*4: Auto Sound Levelizer

AUX Adapter

An AUX adapter, which is located in the front console box, is used by the audio system as an input terminal for portable audio devices.

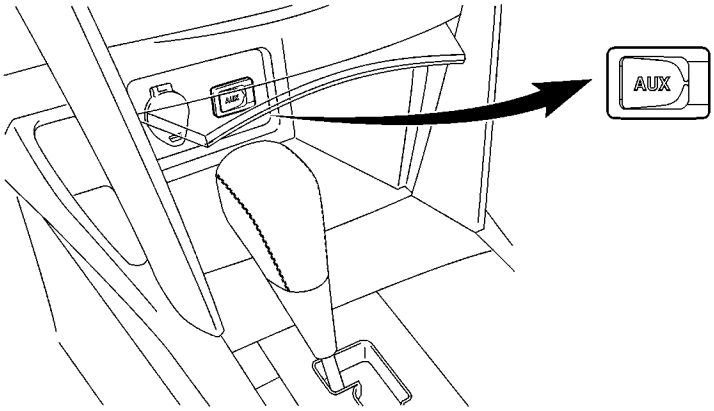

02HMO24Y

Downloaded from www.Manualslib.com manuals search engine

Speaker

▶ Speaker Location ◀

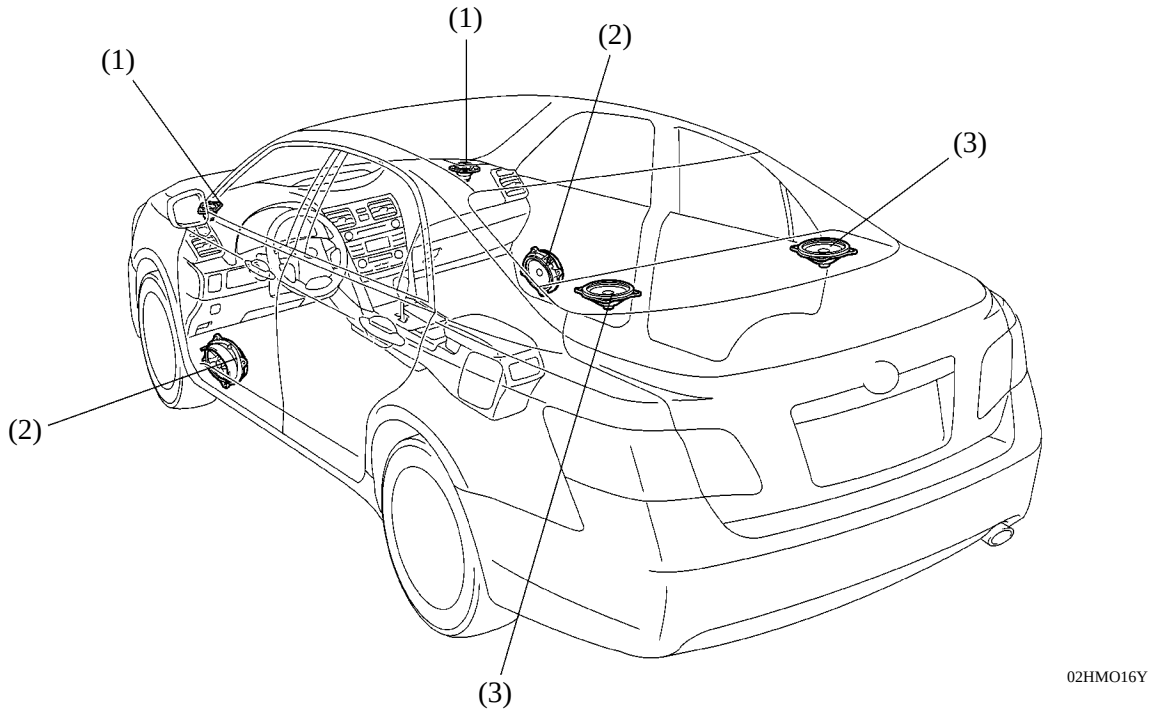

▶ Speaker Specifications ◀

Location	Speaker Type	Caliber	Impedance	Input Rated
(1)	Front Tweeter x 2	65 mm (2.6 in.)	2 Ω	20 W
(2)	Front Midrange x 2	150 x 225 mm (6.0 x 9.0 in.)	2.2 Ω	36 W
(3)	Rear Midrange x 2	150 x 225 mm (6.0 x 9.0 in.)	2.2 Ω	36 W
	Rear Tweeter x 2	COAXIAL	6.5 Ω	18 W

Downloaded from www.Manualslib.com manuals search engine

Bluetooth® Hands-free System

- Bluetooth® is a high-speed wireless data communication system that uses the 2.4 GHz frequency band prescribed by the Bluetooth® SIG (Special Interest Group), with a communication speed of 1 Mbps. By simply bringing a cellular phone that has been pre-registered on the audio head unit or the multi display into the vehicle, the user can talk hands-free. Thus, it is no longer necessary to connect the telephone to a hands-free connection device as in the past.
- A Bluetooth® hands-free system, which enables the user to make and receive calls and talk hands-free by operating the switches on the steering pad or the screen display, is provided on the audio head unit.
- A Bluetooth® hands-free system consists of an audio head unit, a microphone in the overhead console, and the switches on the steering pad.

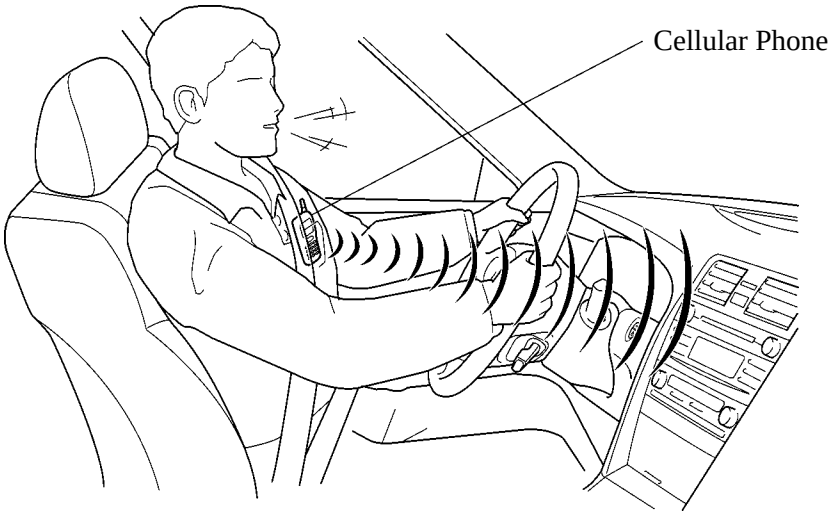

02HMO17Y

Downloaded from www.Manualslib.com manuals search engine

Smart Key System

The smart key system provides a key with a bi-directional communication function. Accordingly, by enabling the certification ECU to recognize the presence of the key within the detection area, this system can lock or unlock the doors, or start the THS II* without the use of the key, as long as the user has the key in his/her possession.

025MO35Y

Door Unlock

025MO44Y

Door Lock

02HMO27Y

Trunk Open

02HMO25Y

THS II* Start

*: Toyota Hybrid System II

Downloaded from www.Manualslib.com manuals search engine

Glass

UV reduction glass, which blocks the ultraviolet rays in the sunlight, is used to ensure comfort.

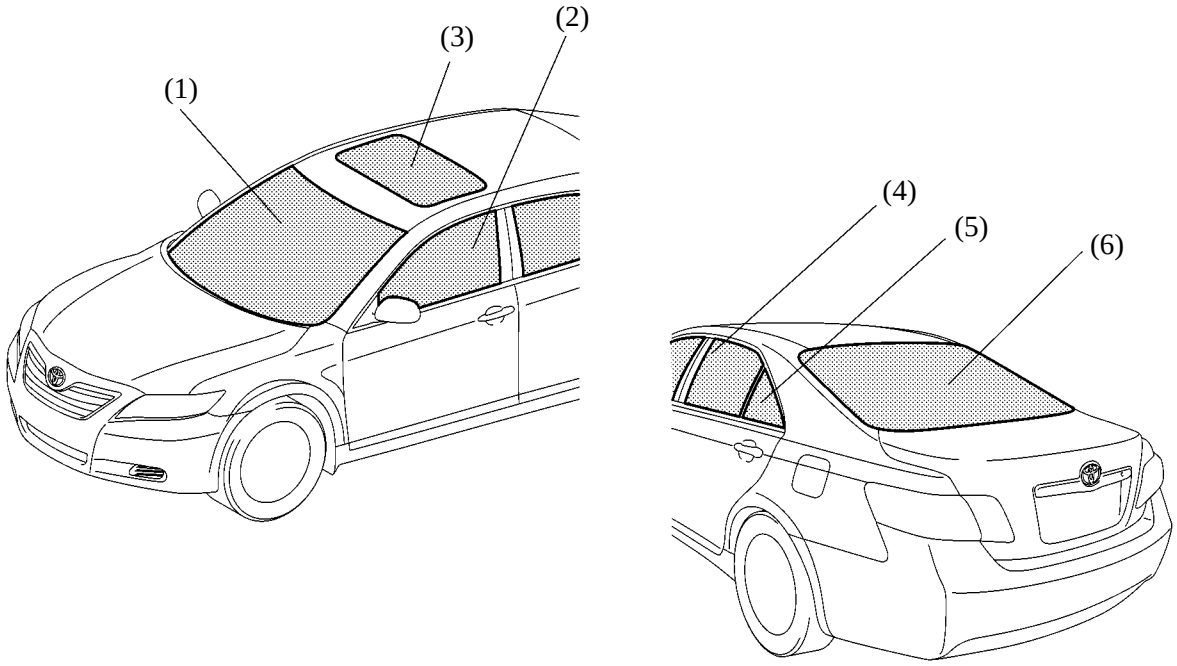

02HMO18TE

Glass Portion		Color	Glass Type	Ultraviolet Reduction Rate	Visible Light Penetration Rate
(1)	Windshield	Green with Dark Shade	Laminated	99%	≧70%
(2)	Front Door	Green	Tempered & UV Cut	92%	≧70%
(3)	Moon Roof Panel	Gray	Tempered	93%	20%
(4)	Rear Door	Green	Tempered & UV Cut	91%	≧70%
(5)	Rear Door Quarter	Green	Tempered & UV Cut	90%	≧70%
(6)	Back Window	Green	Tempered & UV Cut	90%	≧70%

Downloaded from www.Manualslib.com manuals search engine

PERFORMANCE

Power Train

System Performance

Maximum System Output*1	144 kW (192 HP)

*1: The maximum output indicates engine output + HV battery output

Engine

Type	2AZ-FXE
No. of Cylinders & Arrangement	4-Cylinder, In-line
Valve Mechanism	16-Valve DOHC, Chain Drive (with VVT-i)
Displacement	2362 cm^3 (144.2 cu. in.)
Max. Output [SAE-NET]*2	110 kW @ 6000 rpm (147 HP @ 6000 rpm)
Max. Torque [SAE-NET]*2	187 N·m @ 4400 rpm (138 ft·lbs @ 4400 rpm)

*2: Maximum output and torque rating is determined by revised SAE J1394 standard.

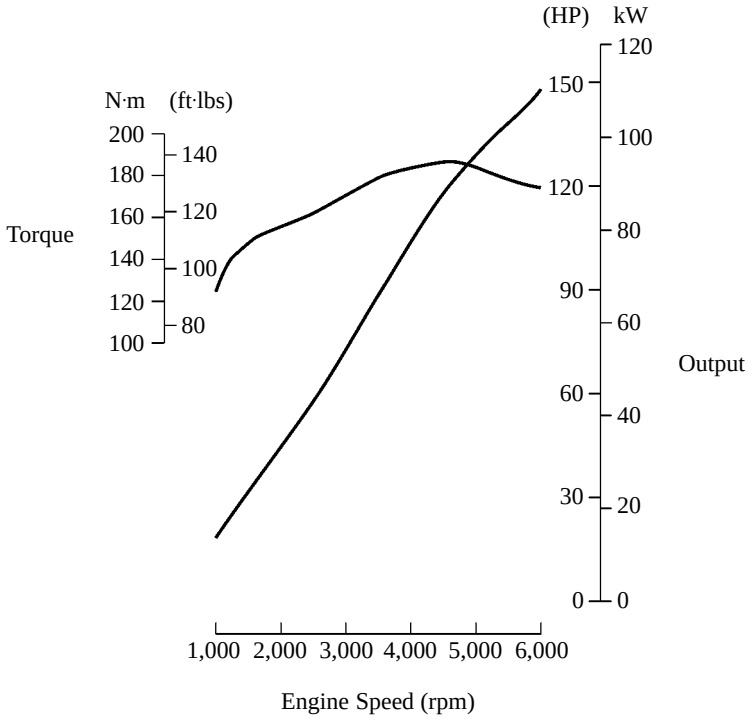

2AZ-FXE Engine Performance Curve

02HMO19Y

Downloaded from www.Manualslib.com manuals search engine

Motor and Generator

Item	MG1 (Motor Generator No.1)	MG2 (Motor Generator No.2)
Type	Permanent Magnet Motor	Permanent Magnet Motor
Function	Generate, Engine Starter	Generate, Drive Wheels
Max. Voltage	DC650 V	DC650 V
Max. Output	—	105 kW (143 HP)
Max. Torque	—	270 N·m (199 ft·lbs)

Hybrid Transaxle

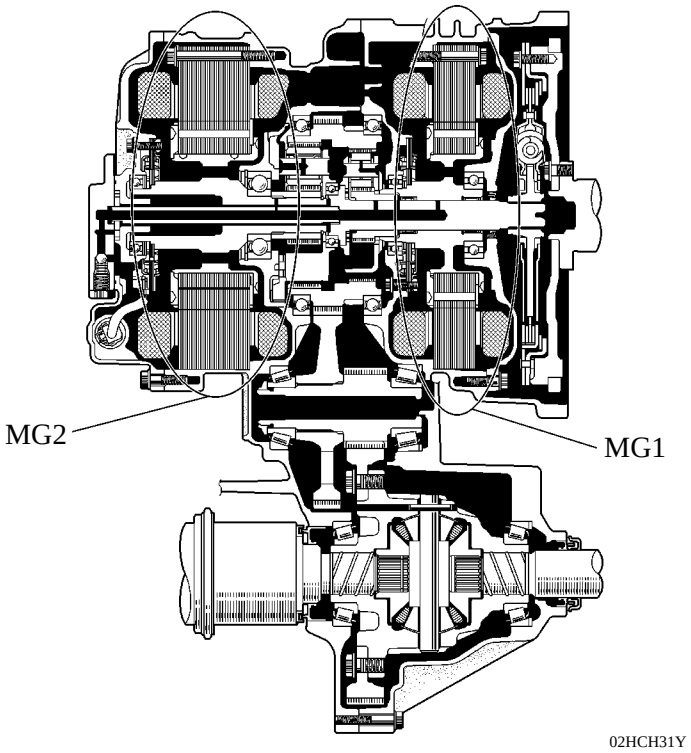

P311 Hybrid Transaxle

Downloaded from www.Manualslib.com manuals search engine

Chassis

Suspension

Front Suspension	Rear Suspension
MacPherson Strut Type Independent Suspension	Dual Link MacPherson Strut Type Independent Suspension

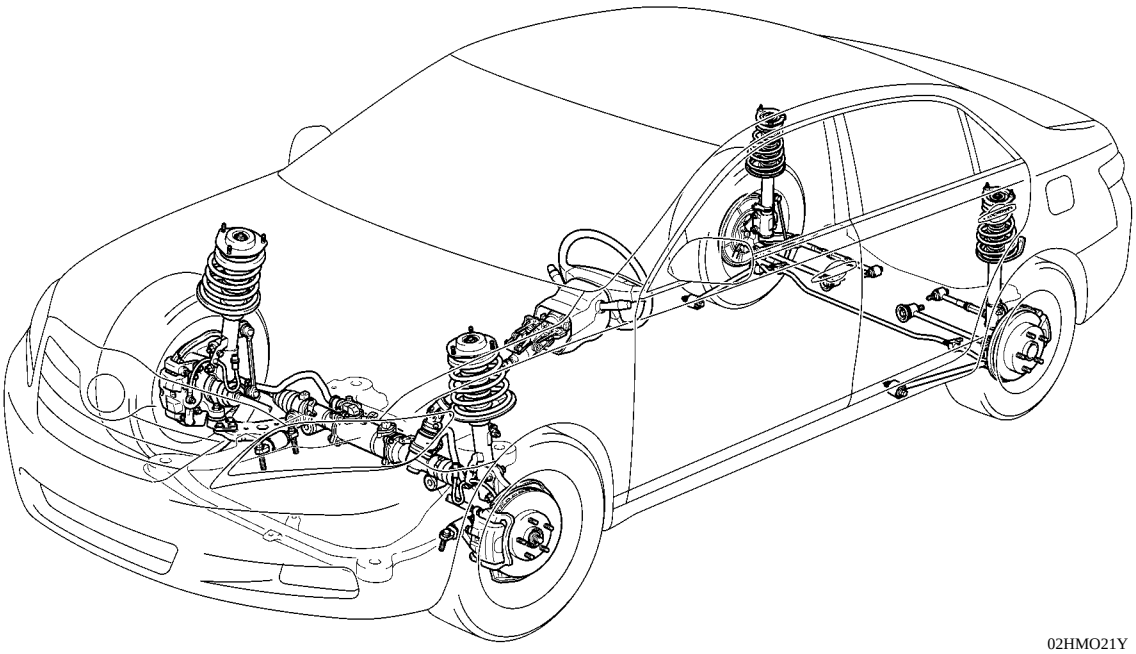

02HMO21Y

Steering

Steering Type	Electric Power Steering
Gear Type	Rack & Pinion

Brake

Front Brake Type	Ventilated Disc
Front Rotor Size	296 mm (11.65 in.)
Rear Brake Type	Solid Disc
Rear Rotor Size	281 mm (11.06 in.)
Parking Brake	Foot Pedal Type with Foot Release
Brake Control	● VDIM (Vehicle Dynamics Integrated Management) ● ECB (Electronically Controlled Brake System)

Aerodynamics

A CD (Coefficient of Drag) of approximately 0.27 has been achieved.

Downloaded from www.Manualslib.com manuals search engine

ENVIRONMENT and RECYCLING

Adoption of TSOP & TPO

TSOP (Toyota Super Olefin Polymer), TPO (Thermoplastic Olefin), which have superior recyclability, are actively utilized while the use of chlorine has been reduced as much as possible.

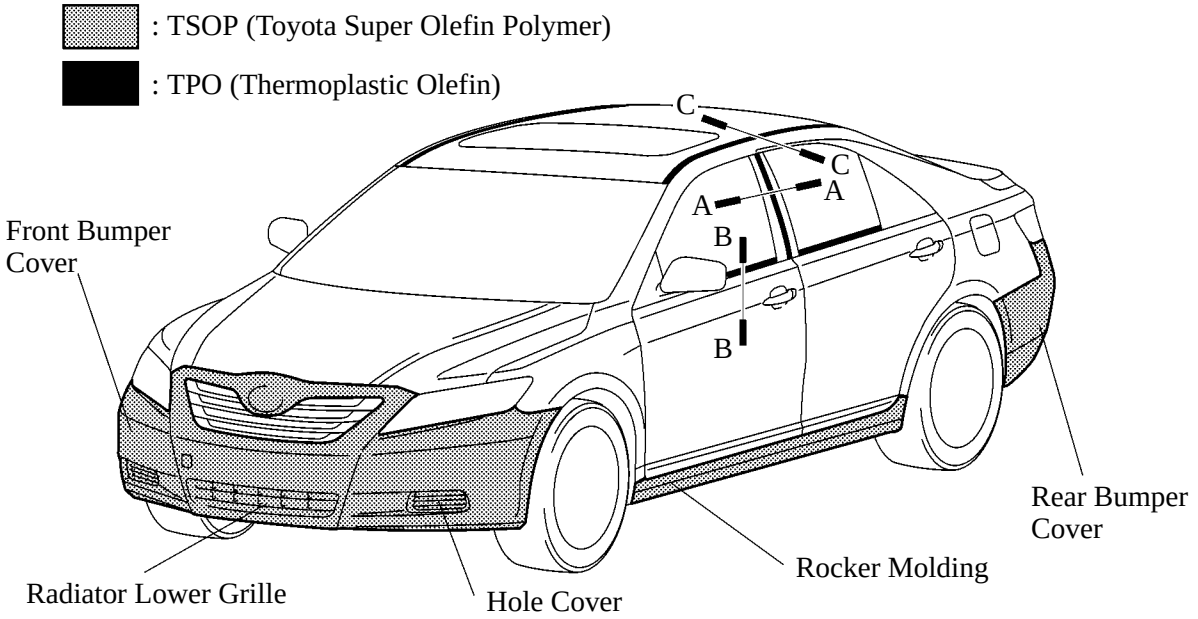

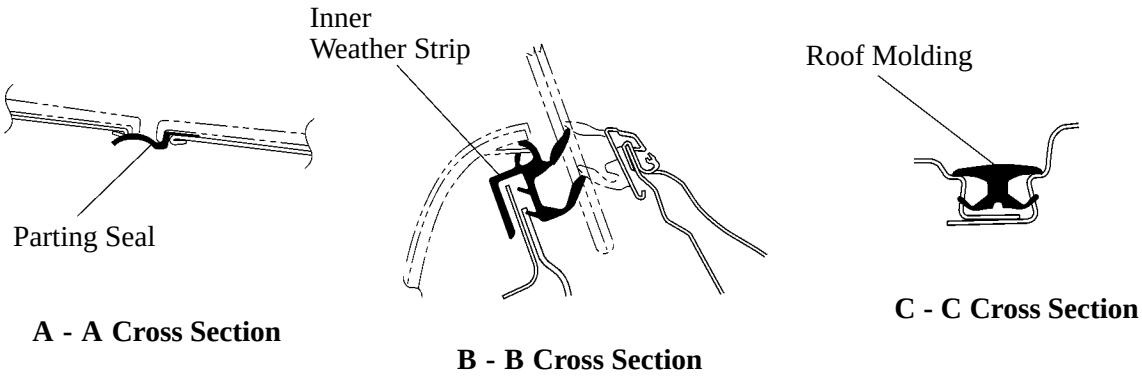

02HMO22Y

Adoption of Lead-free Parts

By using lead-free parts, the adverse impact on the environment has successfully reduced.

Main Lead-free Parts
● Radiator
● Heater Core
● Wiring Harness
● Window Glass Black Coating
● Wheel Balance Weight

Downloaded from www.Manualslib.com manuals search engine

DIMENSIONS

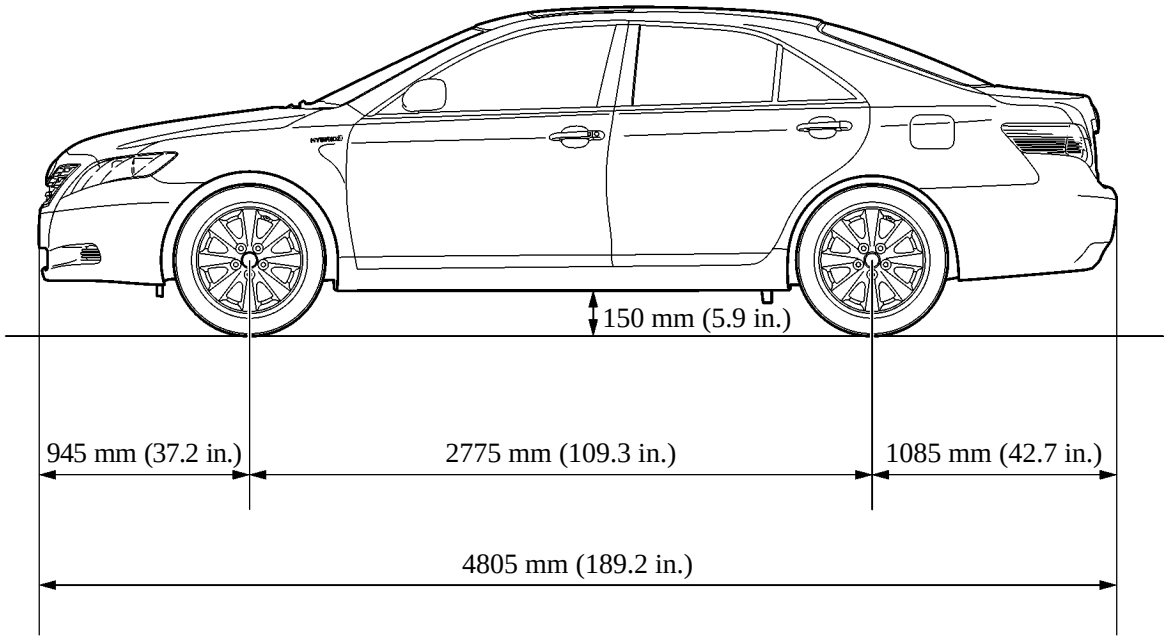

02HMO08TE

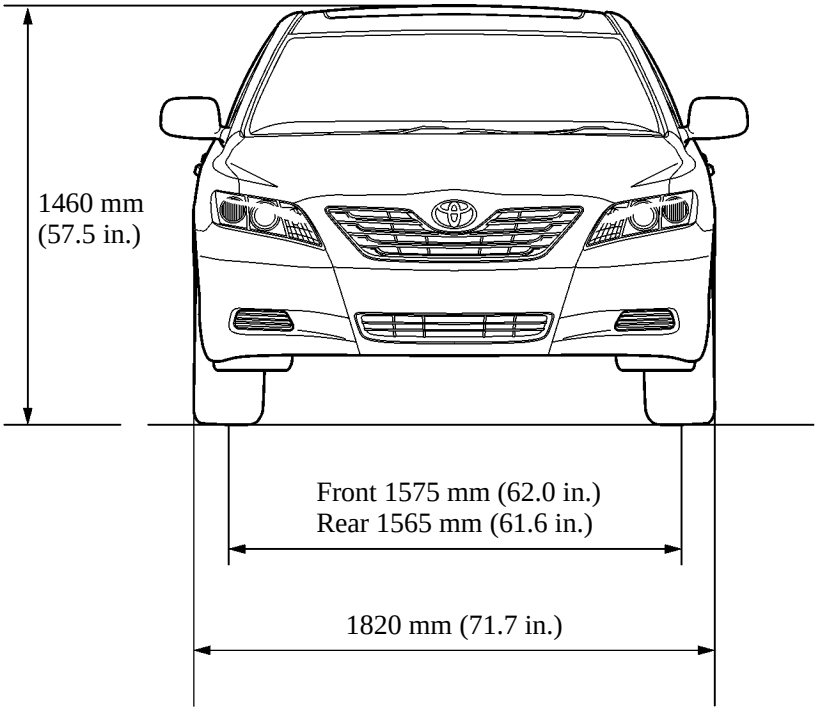

02HMO09TE

Downloaded from www.Manualslib.com manuals search engine

EQUIPMENT LIST

●: Standard OP: Option

Exterior	Radiator Grille	Chrome Plated		●
	Fairing	Front		●
		Rear		●
Chassis	Tire	P215/60R16 94V		●
	Disc Wheel	16 x 6 1/2 J Aluminum		●
	Brake Control	VDIM (Vehicle Dynamics Integrated Management)		●
		ECB (Electronically Controlled Brake System)		●
	Tire Pressure Warning System			●*
	Steering Wheel	4-Spoke (Leather) with Pad Switch		●
	Steering System	EPS (Electric Power steering)		●
		Manual Tilt & Telescope Mechanism		●
Body	Seat Cover Material	Fabric		●
		Leather		OP
	Rear Seat	Foldable 40/60 Split Type		●
	Front Seat Belt	Driver	3-Point ELR with Pretensioner and Force Limiter	●
		Passenger	3-Point ELR with Pretensioner and Force Limiter +ALR	●
	Rear Seat Belt	3-Point ELR +ALR x 3		●
	Front Console Box	Metallic		●
	Rear Console Box	Poly Vinyl Chloride		●
		Leather		OP
Body Electrical	Headlight	Halogen		●
	Automatic Light Control System			●
	Light Turn-OFF System			●
	Daytime Running Light System			●
	High Mount Stop Light			●
	Illuminated Entry System			●
	HV Immobilizer System			●
	Cruise Control System			●
	Air Conditioning System	Right/Left Independent Temperature Control Automatic		●
	Plasmacluster™ Generator			●
	Seat Heater System			OP
	Power Seat	Driver's Seat		●
		Driver and Passenger's Seat		OP
	Wiper System	Washer-linked Wiper Function		●
	Power Window System	Driver's Door	One-touch Auto Down	●
	Power Door Lock Control System			●
	Luggage Door Opener			●
	Smart Key System			●
	Wireless Door Lock Control System			●
	SRS Airbag System	Driver and Front Passenger Airbag		●
		Knee (for Driver) Airbag		●
		Side and Curtain Shield Airbag		●
	Front Passenger Occupant Classification System			●

(Continued)

Downloaded from www.Manualslib.com manuals search engine

●: Standard OP: Option

Body Electrical	Outside Rear View Mirror	Electric Remote Control	●
		Electric Remote Control with Heater	OP
	Inside Rear View Mirror	Compass Display Automatic Glare-resistance EC Mirror	●
	Sliding Roof		OP
	Audio	AM/FM Tuner, In-dash 6-CD Changer, Bluetooth®, JBL Amplifier and 8 Speakers	●
	Navigation with AV System	7.0-inch LCD, GPS, DVD Map Data Media, AM/FM Tuner, In-dash 4-CD Changer, Bluetooth®, JBL Amplifier and 8 Speakers	OP
	Multi-information Display		●
	Clock		●
	Garage Door Opener		●

*: Except for Canadian Package Models

Downloaded from www.Manualslib.com manuals search engine

BODY

BODY STRUCTURE

■LIGHTWEIGHT AND HIGHLY RIGID BODY

1. High Strength Sheet Steel

- High strength sheet steel is used in order to ensure body rigidity and realize a lightweight body.
- In the center pillar reinforcement, roof reinforcement, rocker outer and rocker inner, ultra high strength sheet steel is used.
- Ultra high strength sheet steel has approximately 1.3 times the strength of conventional high strength sheet steel. Therefore, to provide the same strength of high strength sheet steel, a weight reduction of approximately 25% can be realized.

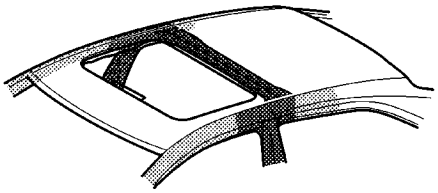

: High Strength Sheet Steel

: Ultra High Strength Sheet Steel

Models with Sliding Roof

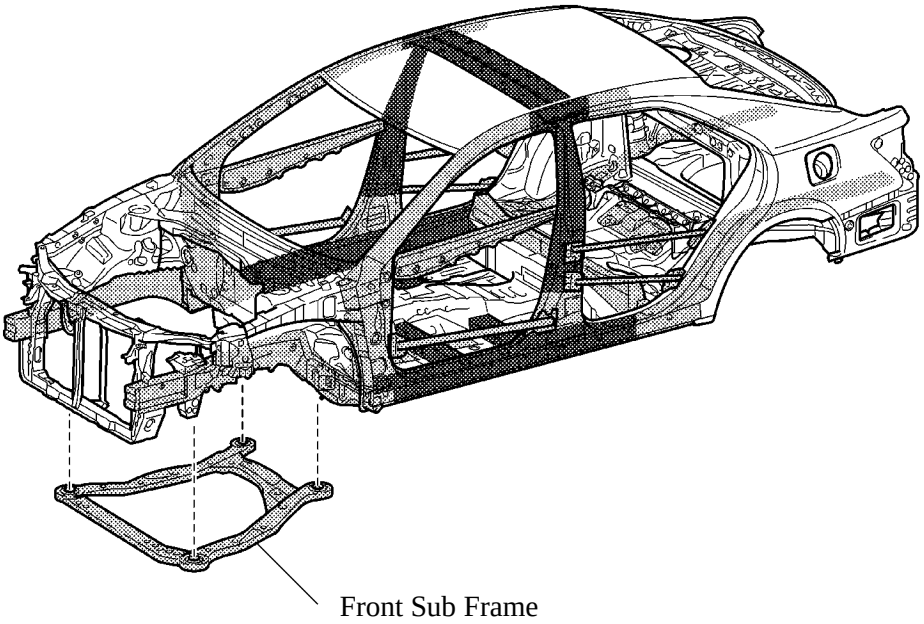

02HBO07TE

Downloaded from www.Manualslib.com manuals search engine

2. Brace

Excellent maneuverability and stability has been achieved by providing a cowl top outer panel for the front suspension tower.

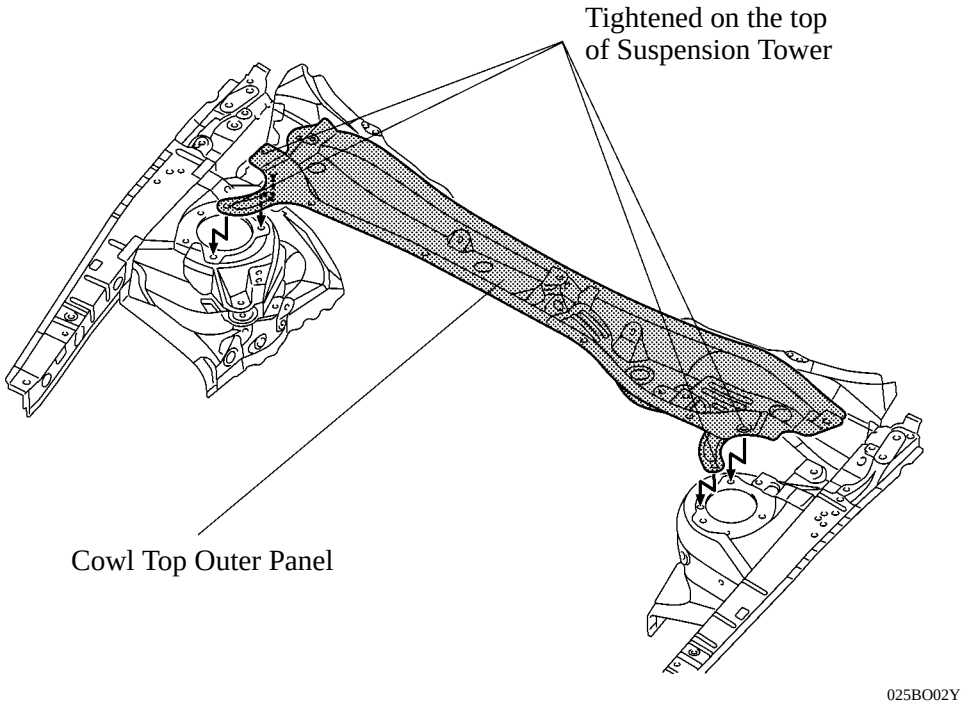

Downloaded from www.Manualslib.com manuals search engine

■SAFETY FEATURES

1. General

The impact absorbing structure of the ’07 Camry Hybrid models minimizes cabin deformation by effectively helping to absorb the impact energy in the event of a front, side or rear collision. This provides high-performance occupant protection.

2. Impact Absorbing Structure for Front Collision

An optimal arrangement of the basic frame and reinforcements helps to minimize cabin deformation in the event of a collision.

- The body disperses the impact force in the event of an offset frontal collision.
- The body strengthens inner door reinforcements and reduces the gap between the door inner panel and the pillar. This communicates impact load to the door belt line reinforcement, reducing the load on the pillar in the event of an offset frontal collision.
- The floor side of the front side member and the inside of the floor side member reinforcements are minimizing the cabin deformation.

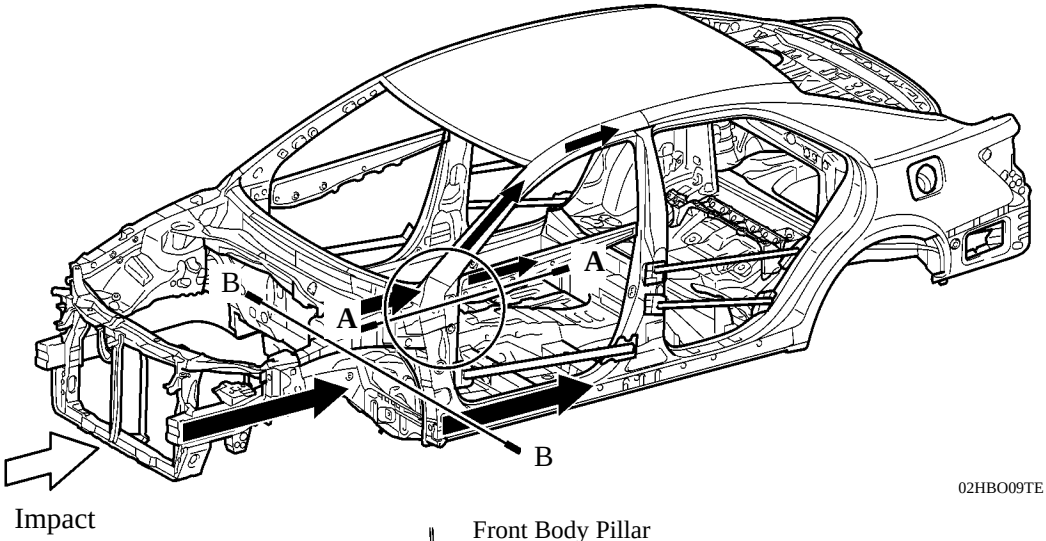

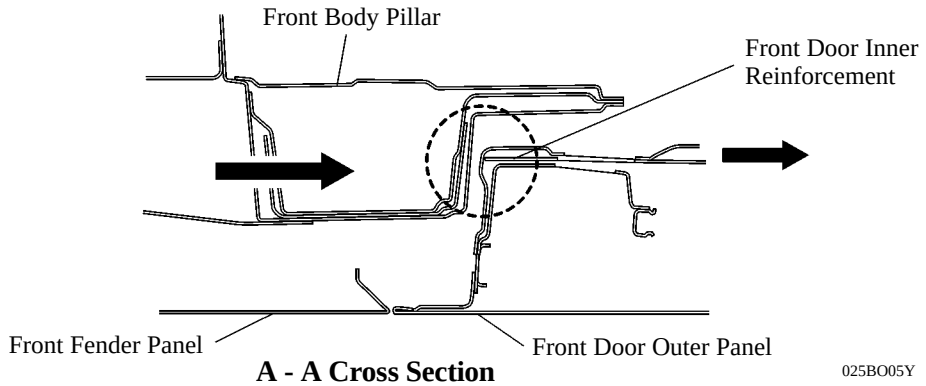

A - A Cross Section

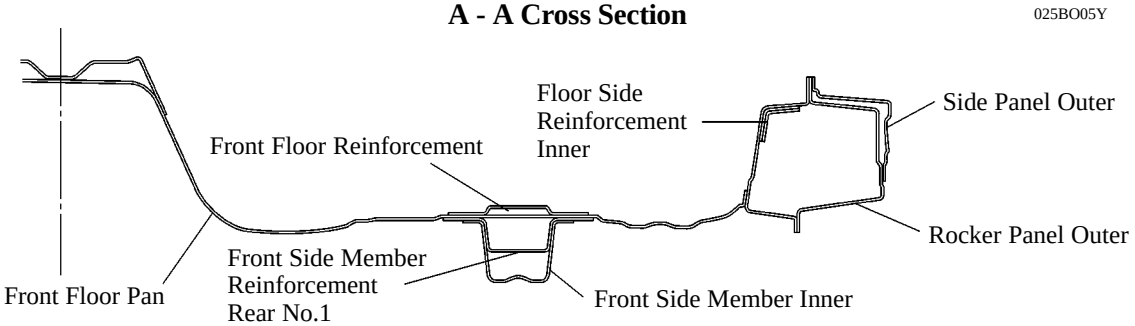

B - B Cross Section

Downloaded from www.Manualslib.com manuals search engine

3. Impact Absorbing Structure for Side Collision

The impact energy of a side collision directed to the cabin area is dispersed throughout the body via the pillar reinforcements, side impact protection beams, and floor cross members, thus helping minimize the impact energy finally directed to the cabin.

- In order to obtain optimal bearing force, ultra high strength sheet steel is employed in the center pillar reinforcement as described on page BO-2, furthermore, box-shaped reinforcement is used inside the center pillar (A - A cross section).
- Ultra high strength sheet steel is used in the roof reinforcement. In addition, the structure has been made to bear impact loads with both side rails (B - B cross section). This reduces the intrusion of the roof rail into the cabin in the event of a side collision.
- A box is used for the rear door inner and a gusset is used for the center floor cross member on the cabin interior side. When a side collision occurs, loads are conducted from the box to the gusset, deformation of the vehicle body is minimized (C - C cross section).

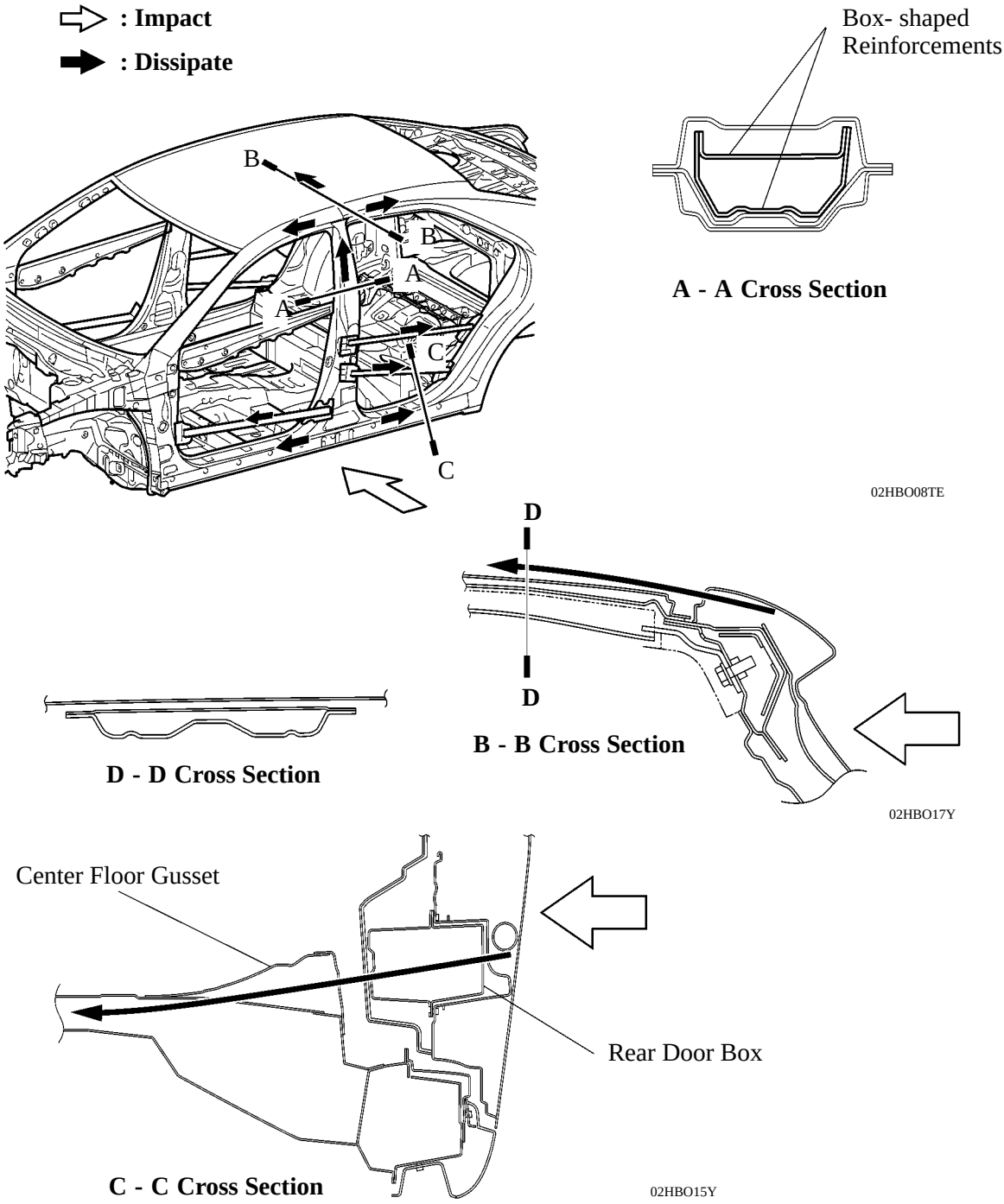

Downloaded from www.Manualslib.com manuals search engine

- Seat pipes and seat pads have been provided on the front seat pillar frame for load conduction. Furthermore, the tunnel box has been reinforced. Thus, input load is conducted from the pillar and door to the seat, tunnel box and opposite seat, minimizing deformation of the body.

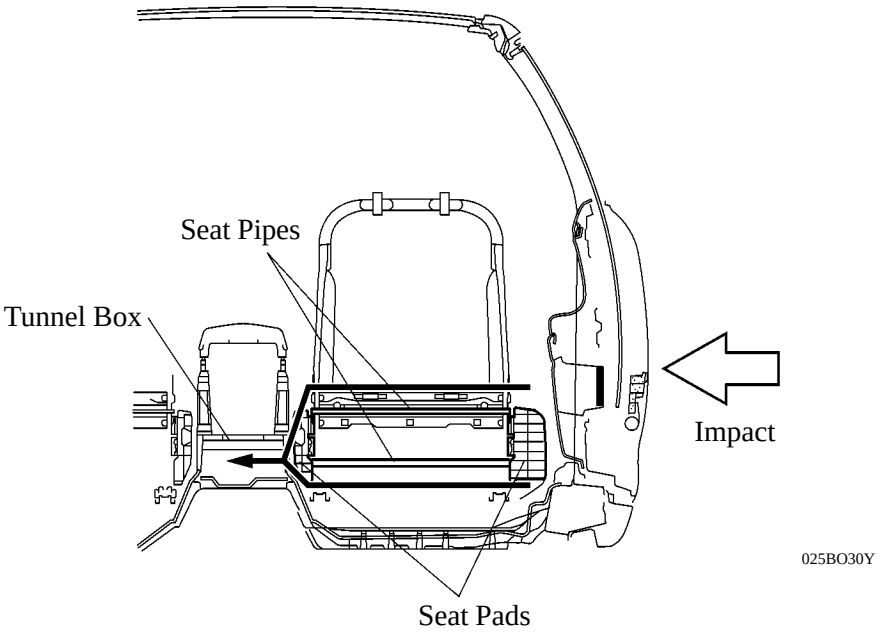

- A head impact protection structure is used. With this type of construction, if the occupant's head hits against the roof side rail or pillar due to a collision, the inner panels of the roof side rail, roof area and pillar collapse to help reduce the impact.

: Head Impact Protection Structure

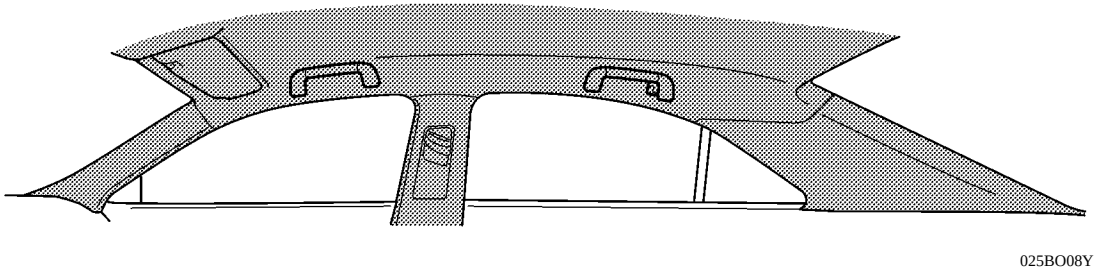

Downloaded from www.Manualslib.com manuals search engine

4. Impact Absorbing Structure for Rear Collision

Rear floor side members and reinforcements have been optimally allocated to control body deformation mode during a collision.

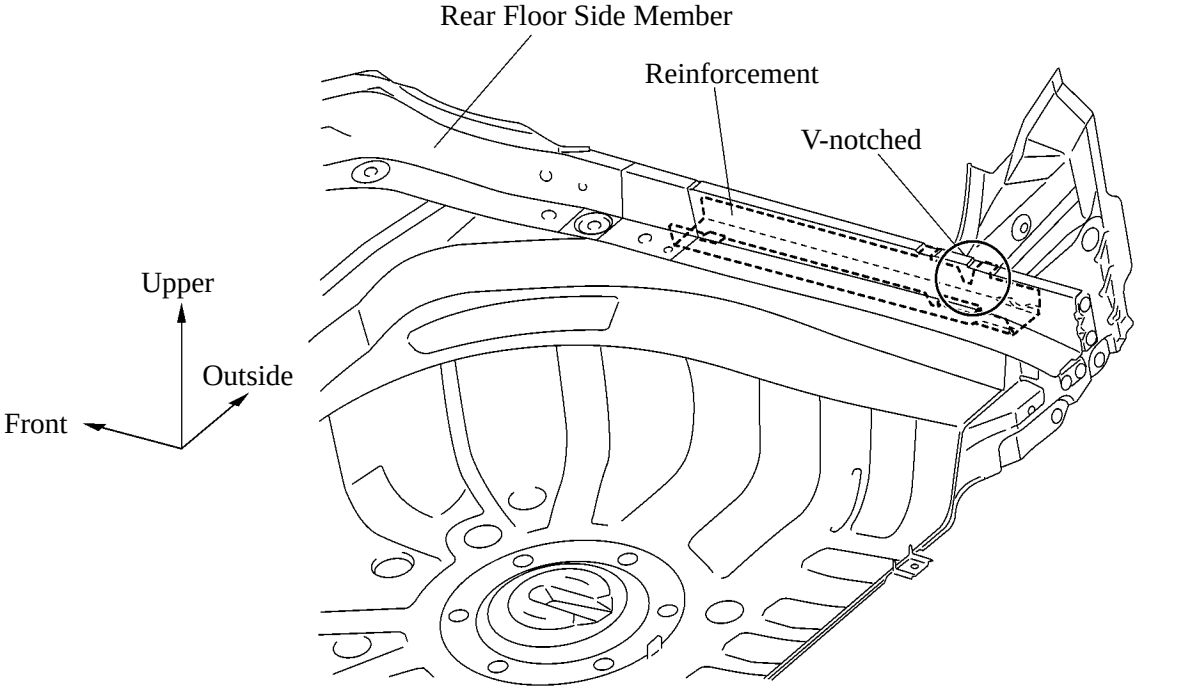

02HBO16Y

Downloaded from www.Manualslib.com manuals search engine

5. Lessening Pedestrian Head Injury

- A longitudinal frame is used as the principle structure of the hood inner, giving uniform rigidity to the hood surface.

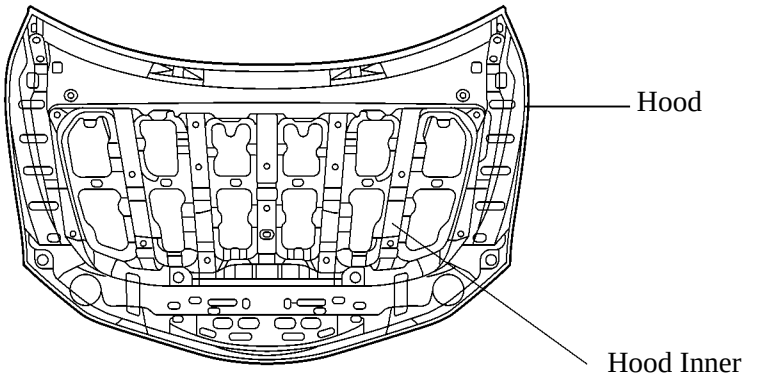

025BO09Y

- The rear wall of the cowl has been opened, so that it can easily collapse in the direction of an impact. Thus, a completely collapsible structure has been realized.

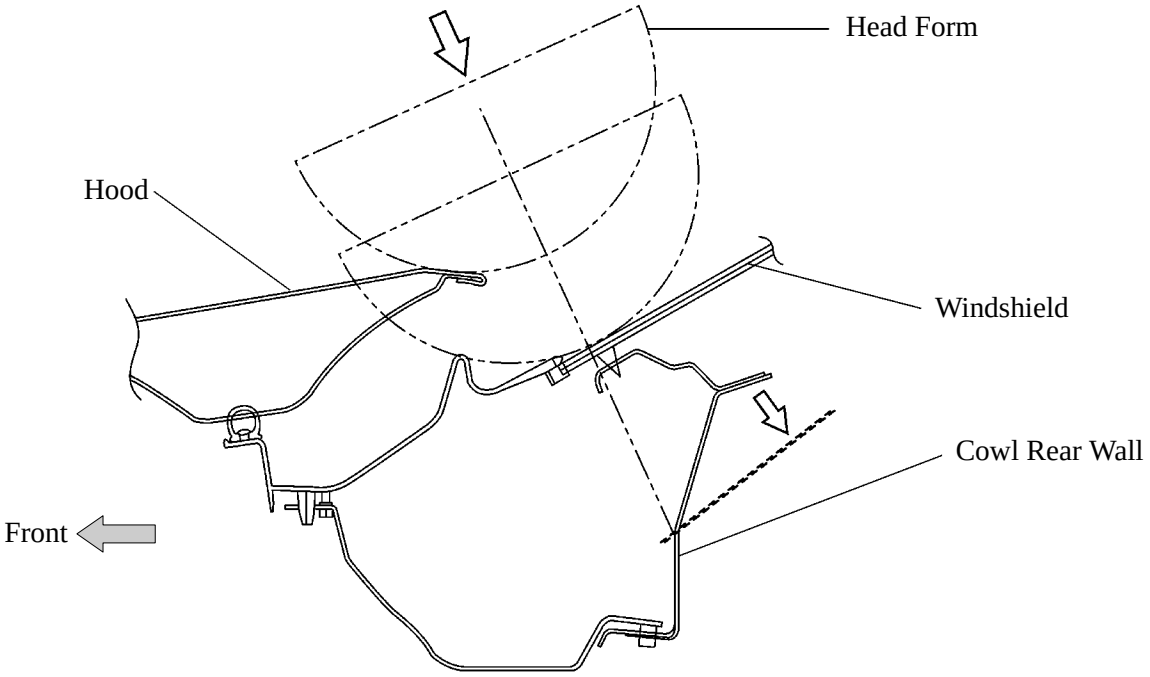

Cross Section at Lower Potion of Windshield

025BO11Y

Downloaded from www.Manualslib.com manuals search engine

- Energy absorbing brackets are used in the joint portion of the front fender. Thus, a certain deformation stroke in the event of a head form collision has been ensured, reducing the impact.

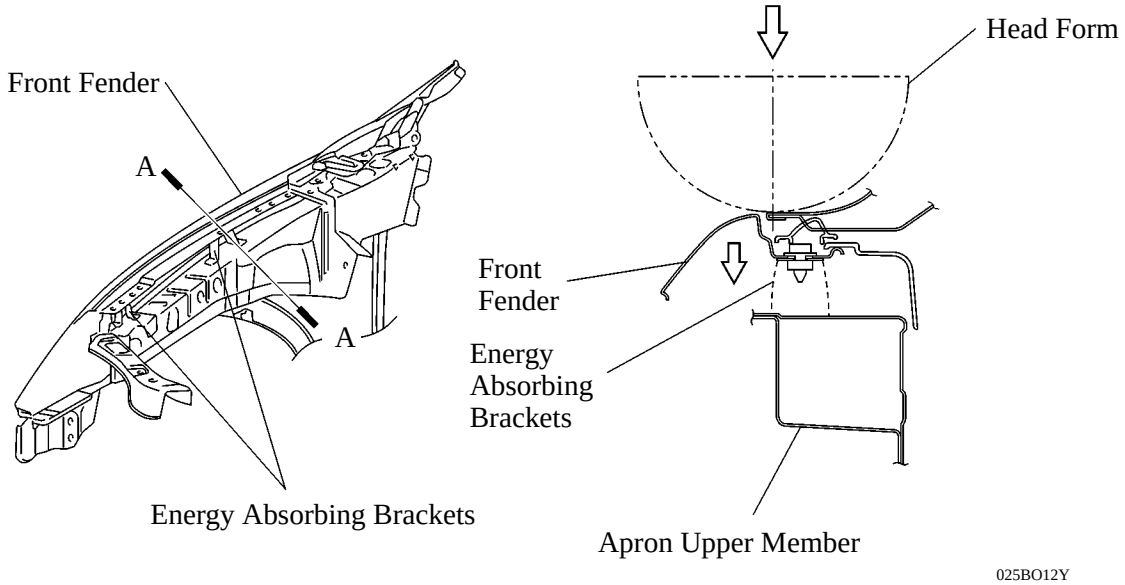

A - A cross Section

Downloaded from www.Manualslib.com manuals search engine

■ RUST-RESISTANT BODY

1. General

Rust-resistant performance is enhanced extensive use of anti-corrosion sheet steel, as well as by an anti-corrosion treatment that includes the application of anti-rust wax, sealer and anti-chipping paint to easily corroded parts such as the hood, doors.

2. Anti-corrosion Sheet Steel

Anti-corrosion sheet steel is used as the following illustration.

: Anti-corrosion Sheet Steel

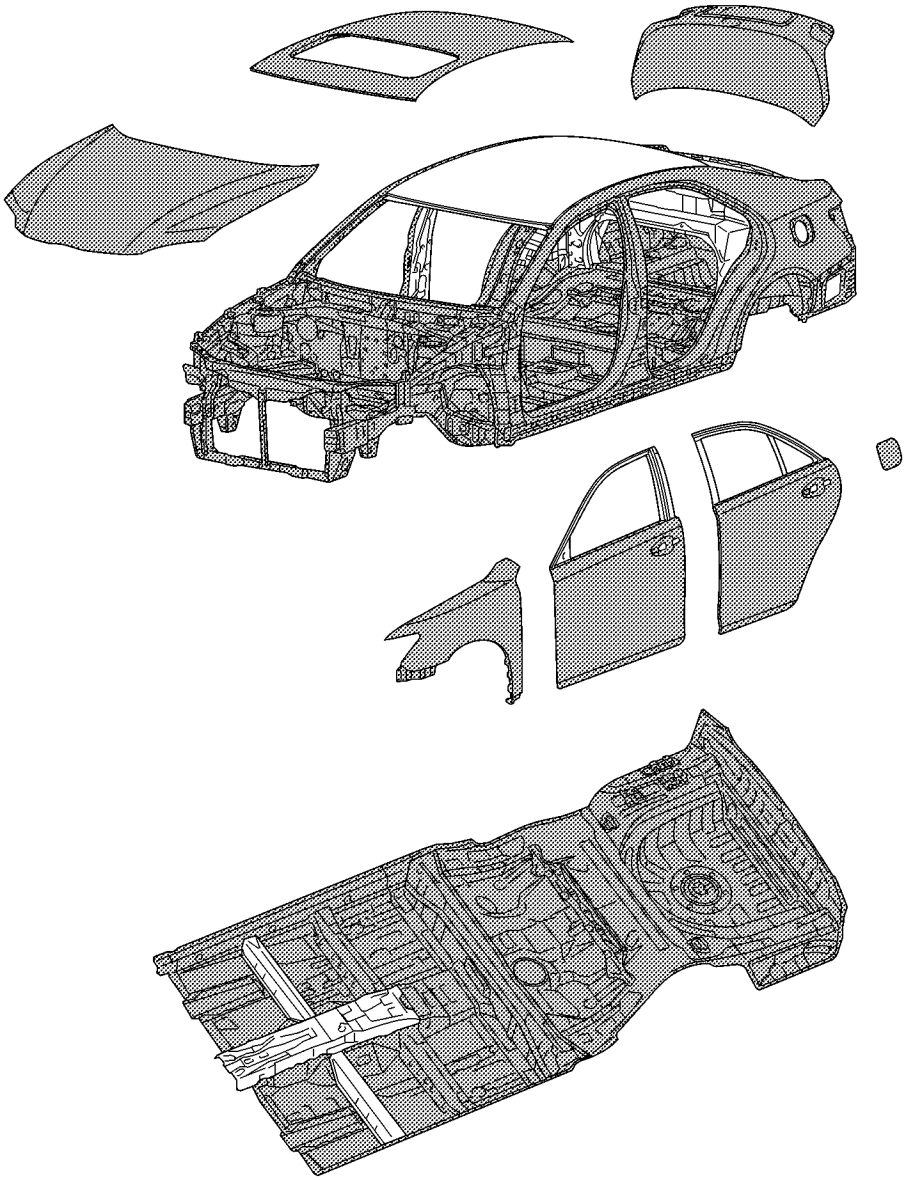

02HBO05Y

3. Wax and Sealer

Wax is applied to edge of the hood, door lower portion, door hinge and fuel filler lid hinge to improve rust-resistant performance. Sealer is applied to hemmed portions of the hood, door panels and luggage door.

Downloaded from www.Manualslib.com manuals search engine

4. Under Coat

Acrylic acid resin is applied to under side of the body, inside the rear wheel housing and other parts that are susceptible to stone chipping damage, thus improving the rust-resistant performance of these areas.

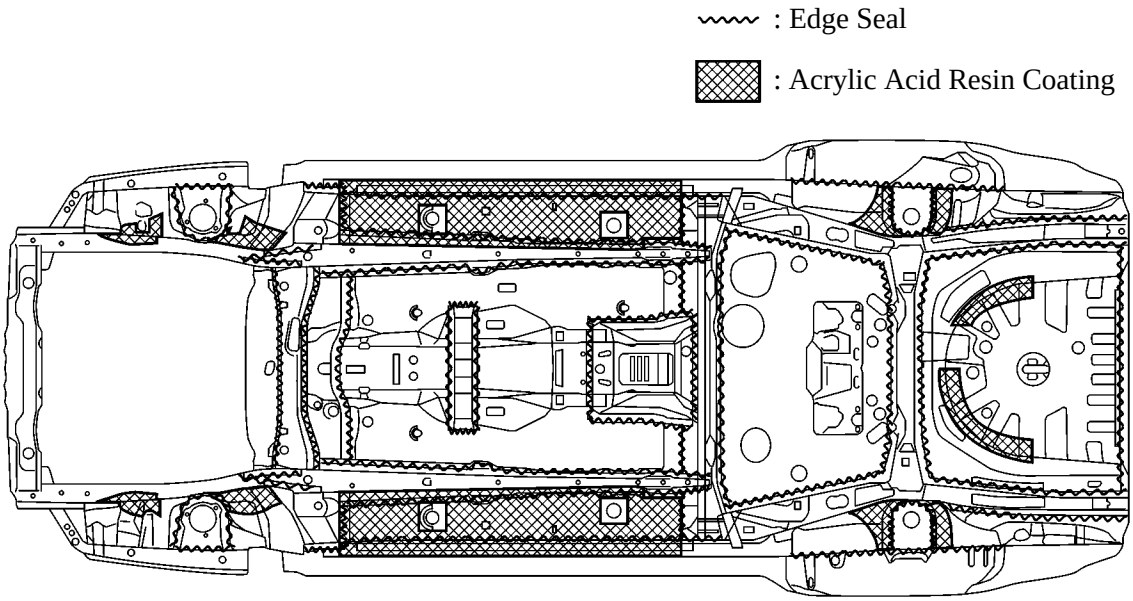

View from Bottom Side

02HBO18Y

5. Anti-chipping Application

Soft-chip primer has been applied to the front end of the hood and the lower end of the door. Furthermore, large rocker moldings are used on all models as standard equipment in order to ensure chip resistance performance in the rocker panel.

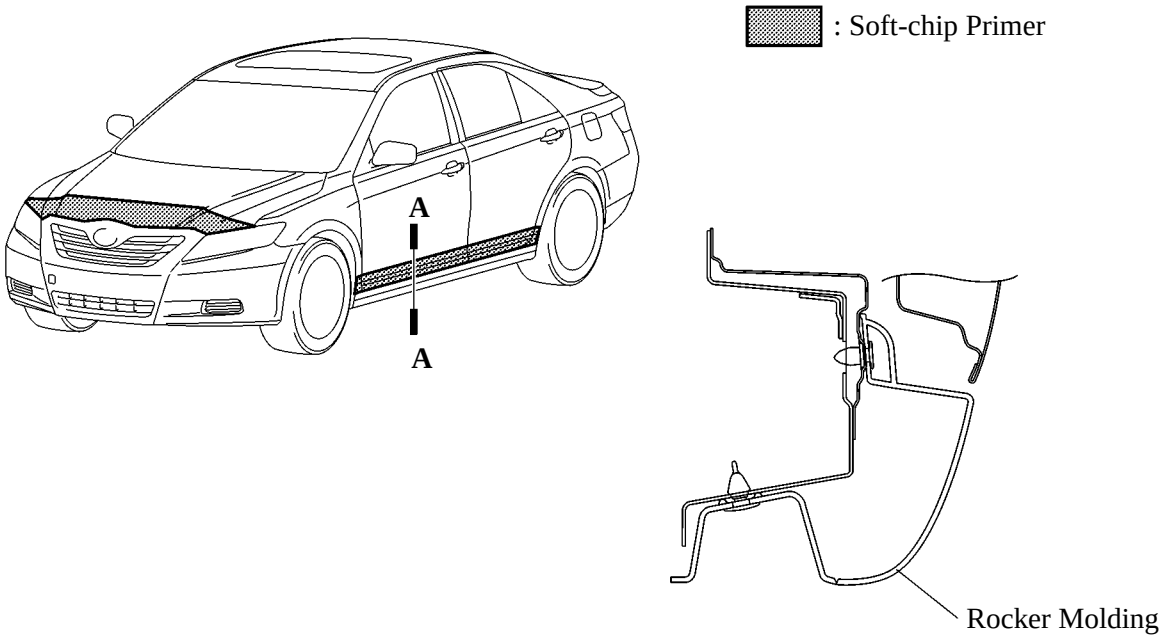

A - A Cross Section

02HBO10Y

Downloaded from www.Manualslib.com manuals search engine

■LOW VIBRATION AND LOW NOISE BODY

1. General

Effective application of vibration damping and noise suppressant materials reduces engine and road noises. The high-density silencer is used around the engine room and the instrument panel, thus, realizing improvement of the acoustic absorption and sound insulation and reduction in the engine transmission noise, compared with the gasoline engine model.

2. Sound Absorbing and Vibration Damping Materials

- Foamed urethane sponge and foamed sealing material are applied onto the roof panel and pillars to reduce wind and road noise.
- A large-size dash inner silencer, dash outer silencer, hood silencer, apron silencers, cowl outer silencer and tunnel inner silencer are used to reduce engine and road noise and improve quietness inside the passenger compartment.
- The fender liner with the high-density felt is fitted inside the front wheelhouse and the nonwoven felt type fender liner is fitted inside the rear wheelhouse in order to minimize grit, water and road noises.
- The material having high sound-shielding property is used for the intermediate film of the laminated glass of the window shield glass to reduce wind noise.
- The silencer on the back side of the instrument panel is highly densified and its applied section is added in order to reduce the engine noise.

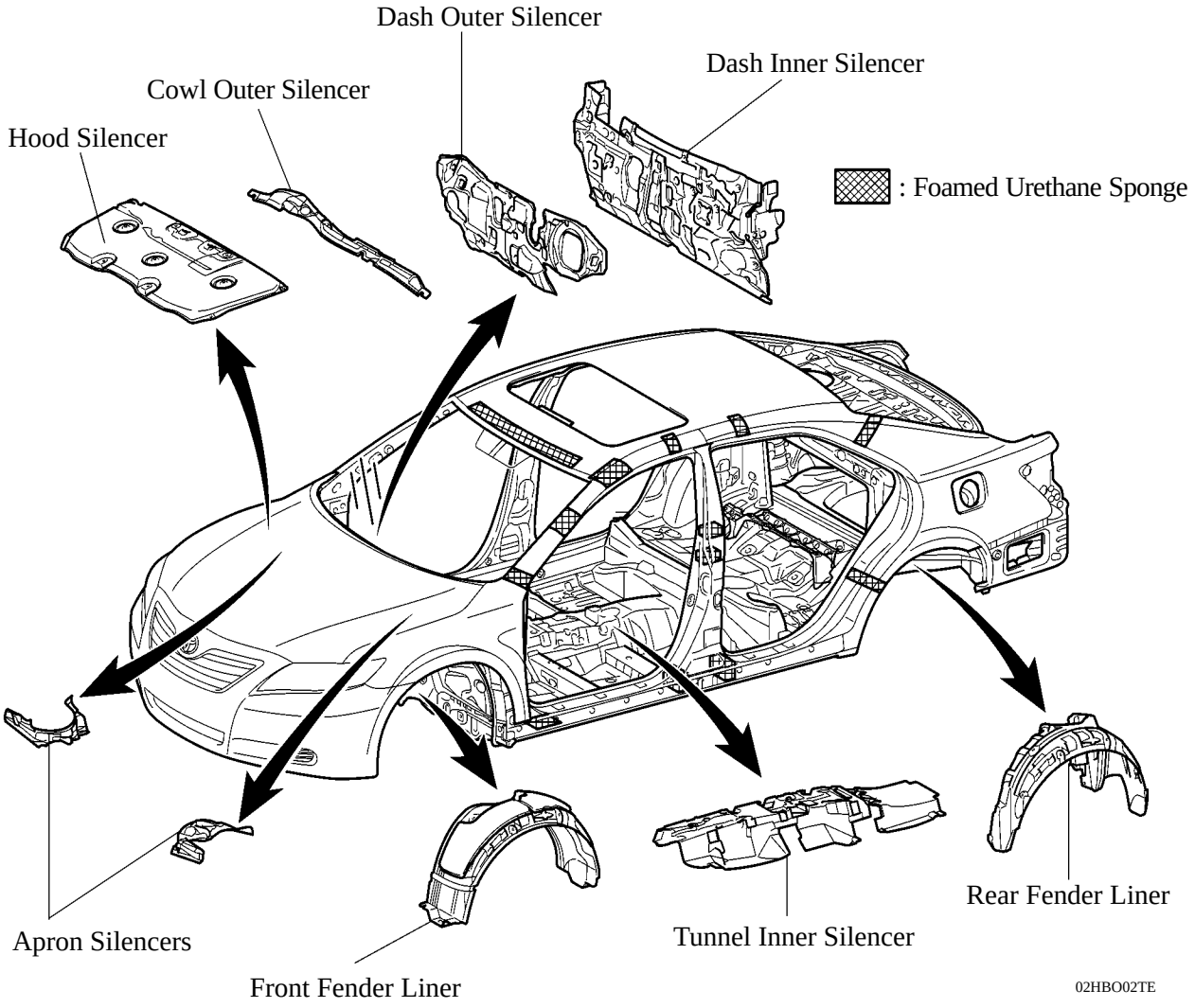

Downloaded from www.Manualslib.com manuals search engine

- In place of the asphalt sheet used on conventional models, a vibration damping foam coating is used on the floor of the new model to reduce road noise.
- The thickness of the vibration damping foam coating has been optimally adjusted for the individual portions. As a result, a lightweight coating has been realized.

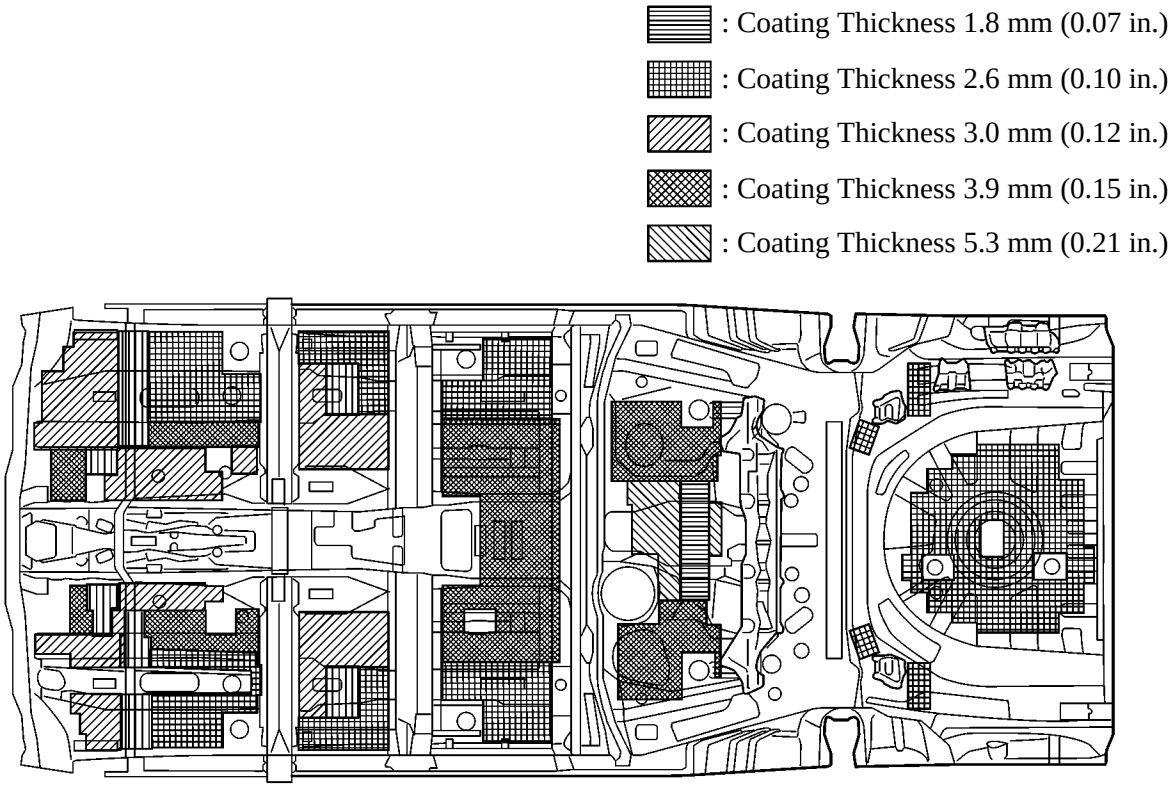

View from Top Side

02HBO06Y

Downloaded from www.Manualslib.com manuals search engine

3. Reducing Wind Noise

- A structure that blocks the airflow is used in a portion of the door weather strip (at the front corner) in order to reduce wind noise (A - A cross section).
- The air turbulence has been eliminated through the use of the hood side seal rubber (B - B cross section).
- By streamlining the joins between the hood and windshield glass (C - C cross section) and between windshield glass and the roof (D - D cross section), air turbulence has been minimized.

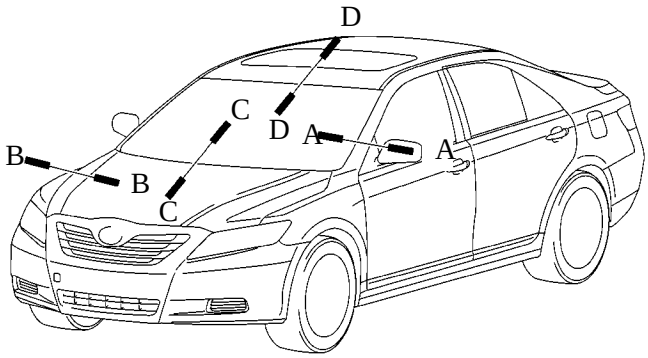

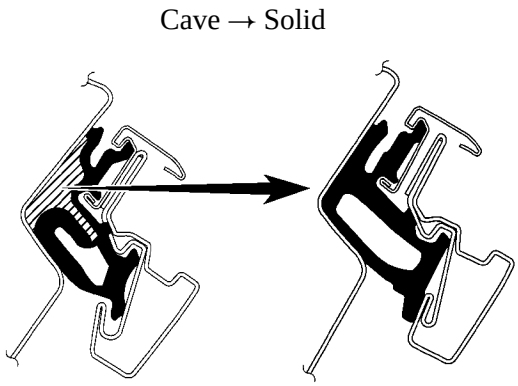

A - A Cross Section

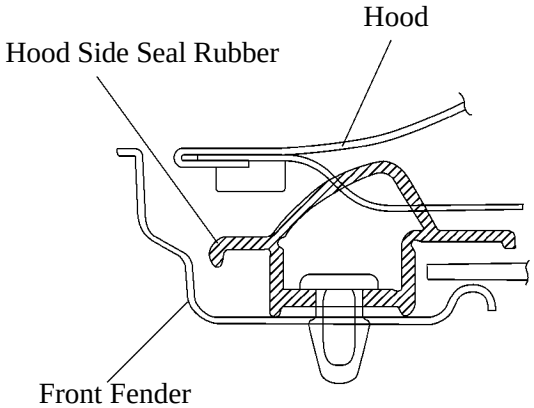

B - B Cross Section

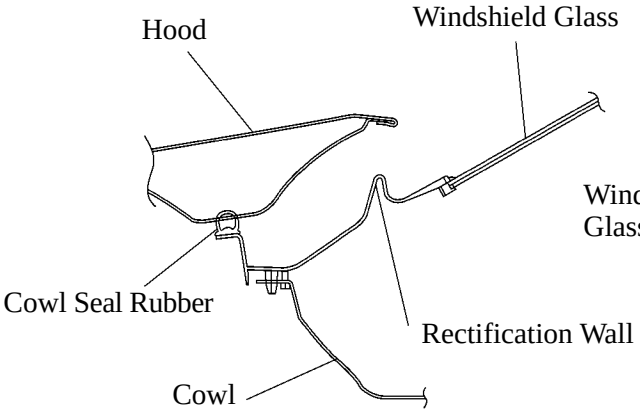

C - C Cross Section

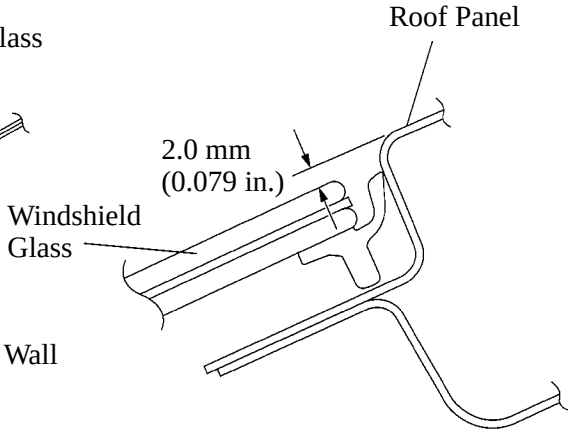

D - D Cross Section

02HBO11Y

Downloaded from www.Manualslib.com manuals search engine

- Fender seals made of foamed resin are used between the front fender and the side member outer to prevent air from blowing through. (E - E cross section)
- Parting seals made of flexible resin are employed between the front and rear doors to eliminate air turbulence (F - F cross sections).

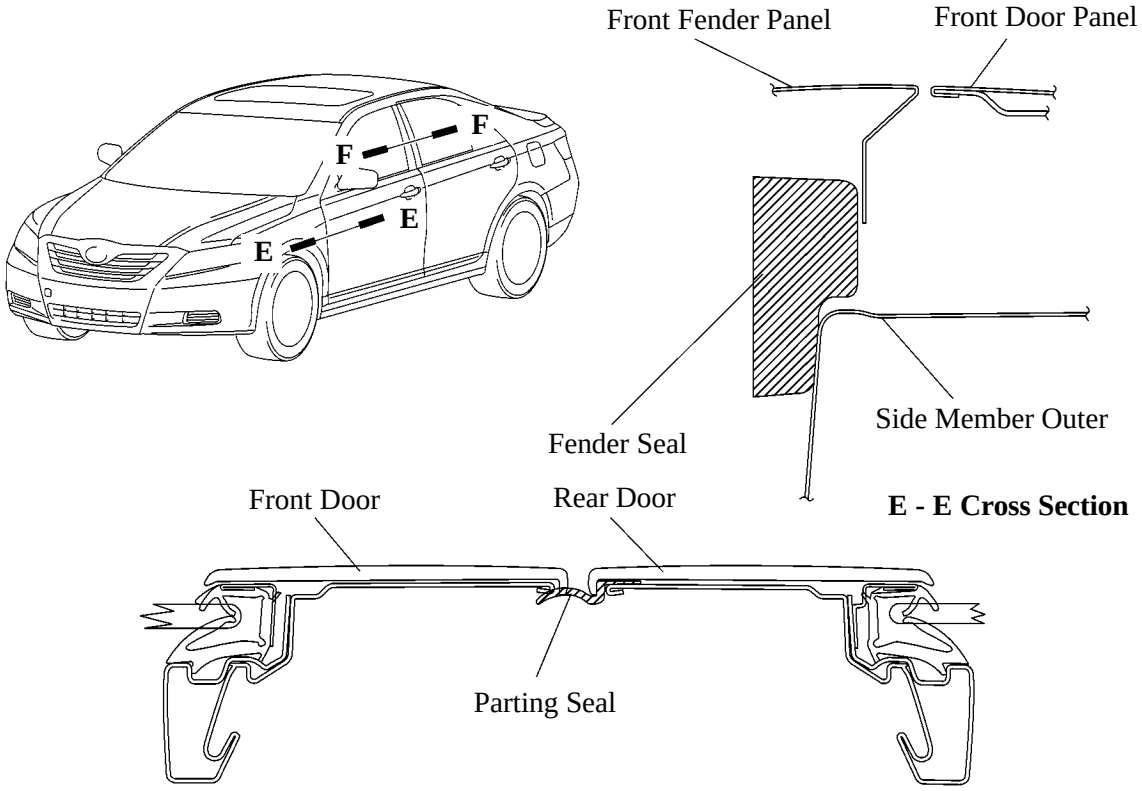

F - F Cross Section

02HBO12Y

Downloaded from www.Manualslib.com manuals search engine

■AERODYNAMICS

To improve aerodynamic performance, the following measures have been taken.

- Front and rear fairings are provided to smooth out the airflow around the tires and reduce the air resistance while the vehicle is in motion.

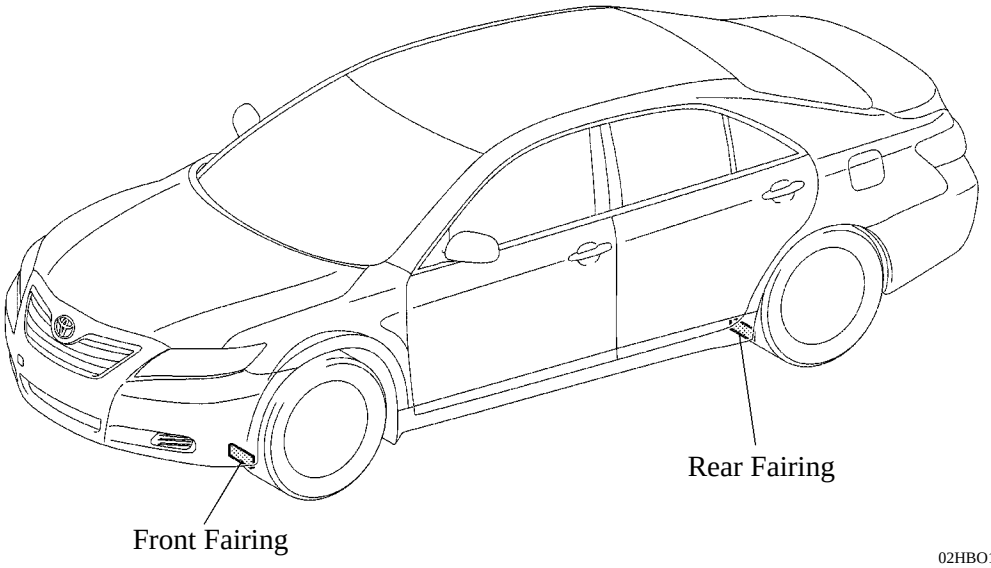

- The engine undercover has been formed into a step shape to increase the velocity of the air flowing underneath the vehicle. This creates a vacuum and suppresses the lift force, thus, excellent maneuverability and stability have been achieved.

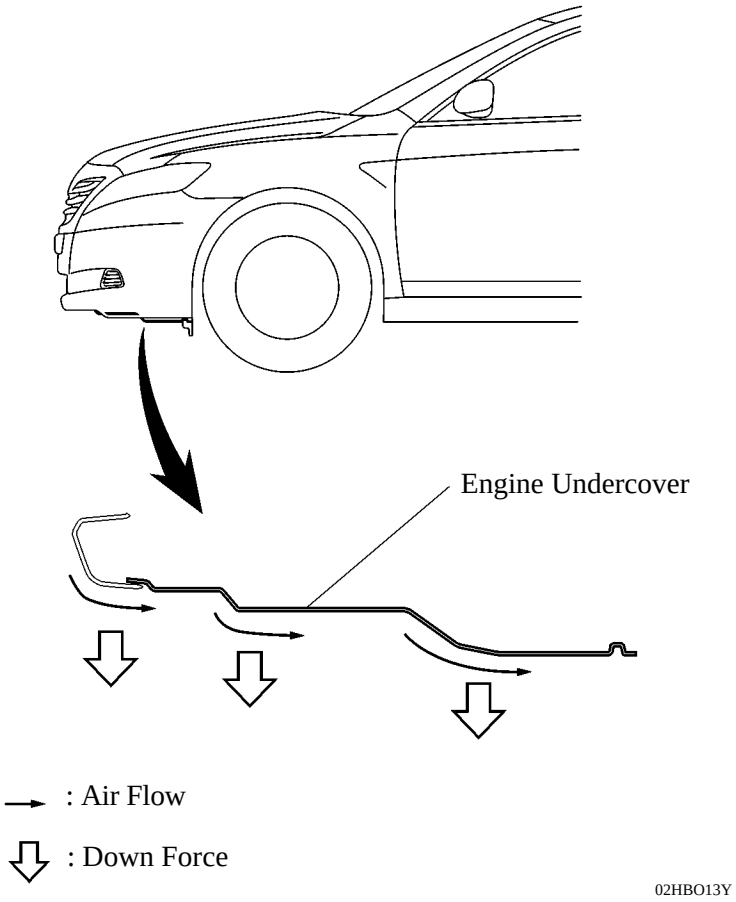

Downloaded from www.Manualslib.com manuals search engine

- The use of the rectification parts and the flat vehicle bottom provides smooth airflow underneath the vehicle.

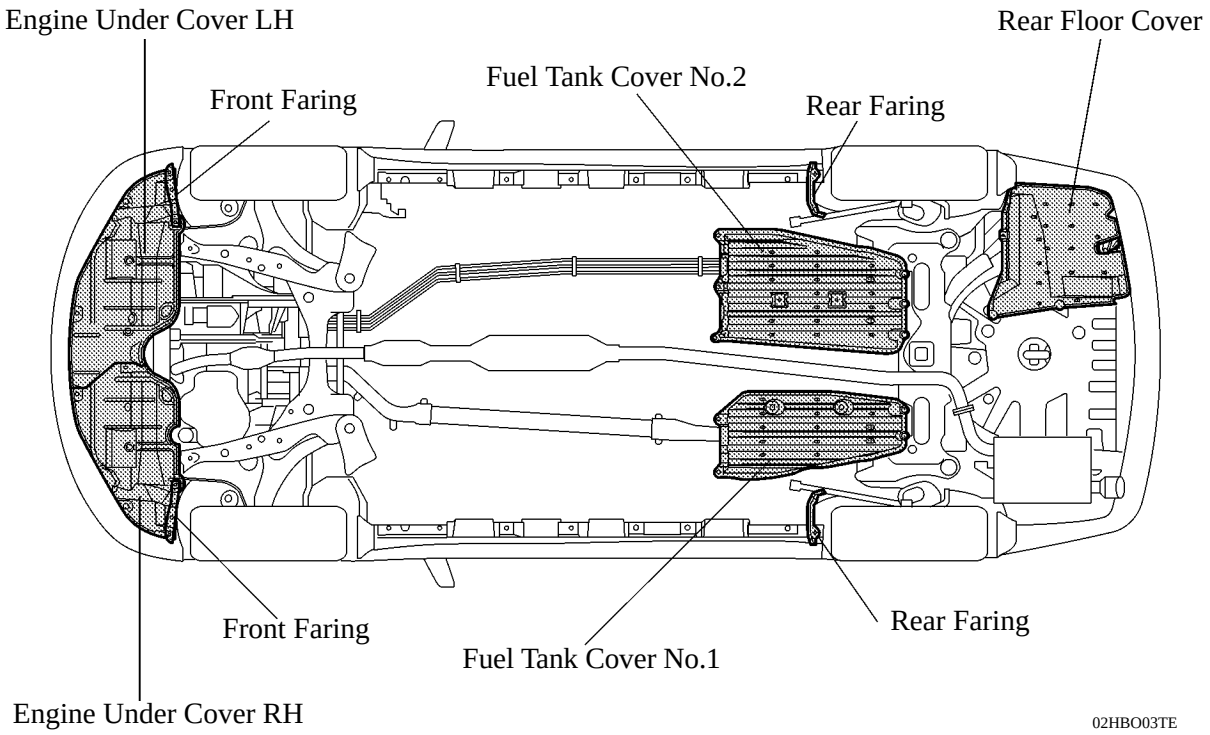

View from Bottom Side

Downloaded from www.Manualslib.com manuals search engine

ENHANCEMENT OF PRODUCT APPEAL

■ PARTS WITH LOW REPAIR COST

- The plating portion of the front grille has been redesigned as an individual part. As a result, replacing only damaged parts is possible, reducing repair costs.

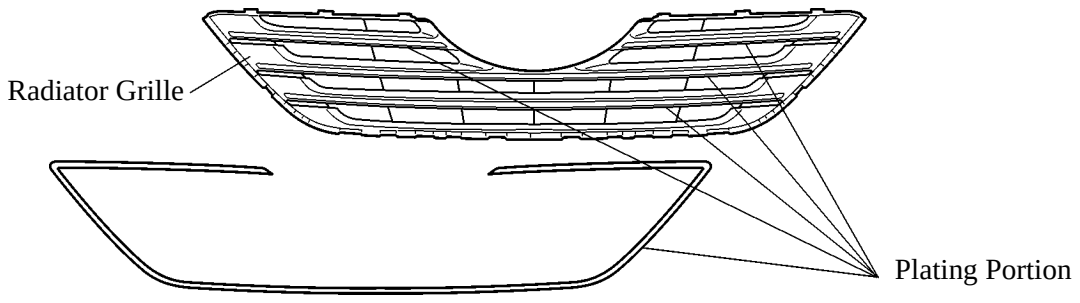

02HBO04Y

- By reducing from 18 to 8 the number of fixing points used for installing the rear bumper cover onto the vehicle body, repair time has been shortened.

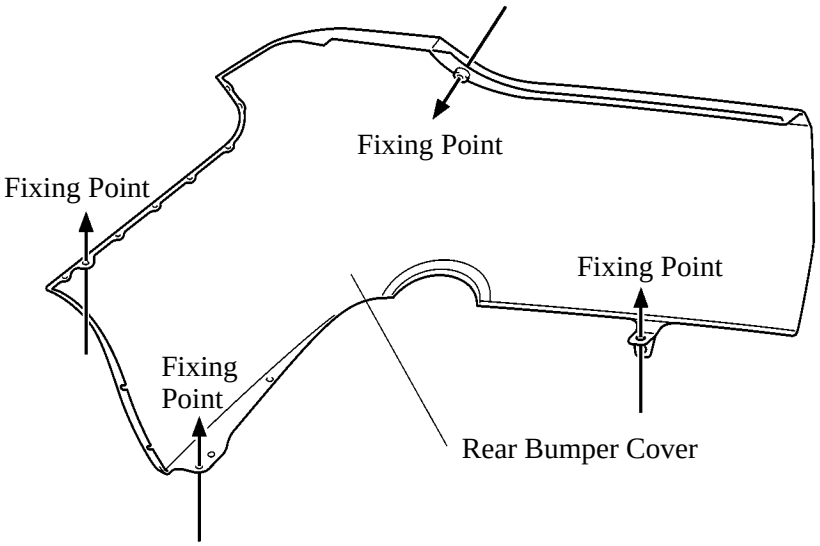

02HBO19Y

Downloaded from www.Manualslib.com manuals search engine

■ WASHER NOZZLE

Spray type washer nozzles are located under the engine hood to ensure good appearance. These nozzles can spray windshield washer fluid over a wide area by spraying it in a fan shape. The washer fluid volume has been reduced so as not to hinder the driver's view when washer system is operated.

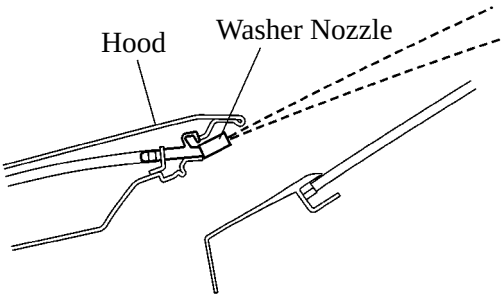

025BO25Y

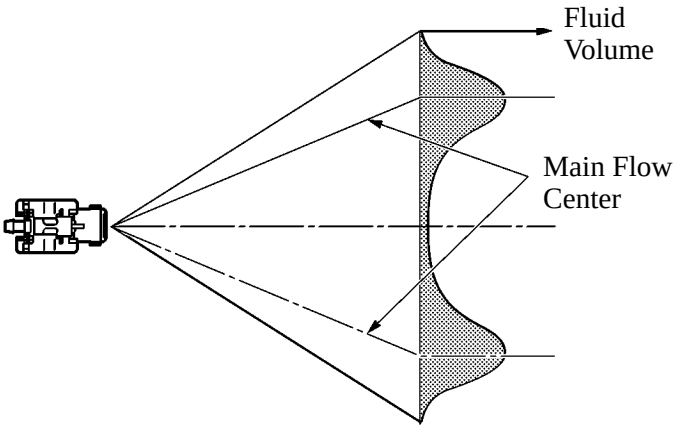

01YBO31Y

Service Tip

Spray type washer nozzles cannot be adjusted because of their structure. Do not attempt to adjust the nozzles as it could damage them.
If adjustment is necessary, adjust the nozzles after replacing them with those selected from five part numbers with different spray angles. For details, see the 2007 Camry Hybrid Vehicle Repair Manual (Pub. No. RM02H0U).

■ WIPER ARM & BLADE

The unified construction of the wiper blade and arm is used. A fin-shaped resin cover is used for the entire wiper blade. This ensures the effectiveness of the wipers even when traveling at high speeds.

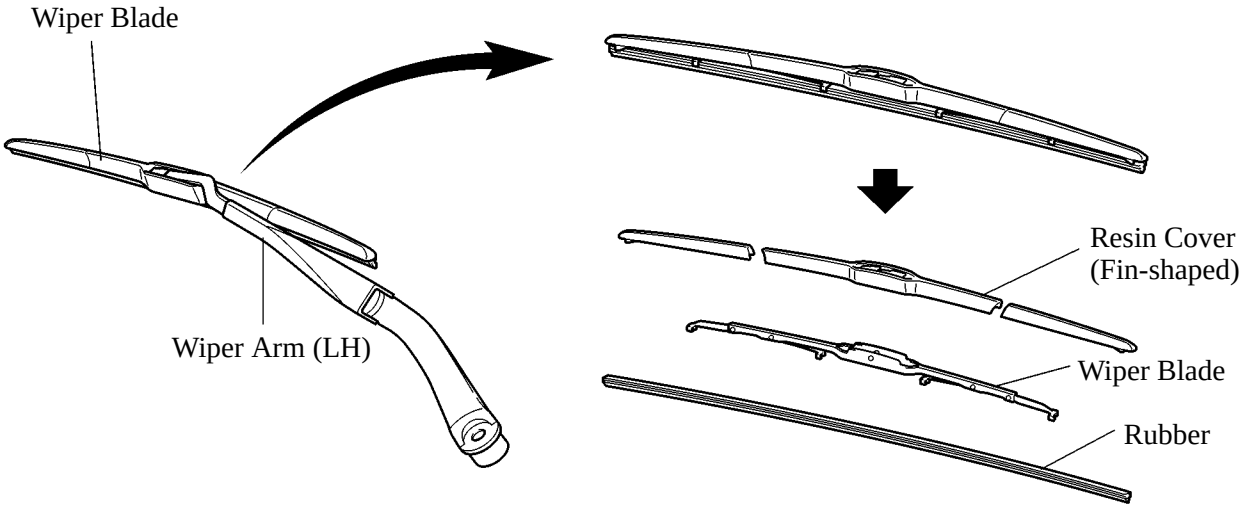

025BO26Y

Downloaded from www.Manualslib.com manuals search engine

■ INTERNAL TRUNK RELEASE HANDLE

In case a person is inadvertently locked inside the trunk and needs to get out, an internal trunk release handle is included inside the luggage room.
The handle is made of phosphorescent plastic, so that it is visible in the luggage room for a while even after the luggage room door has been closed.

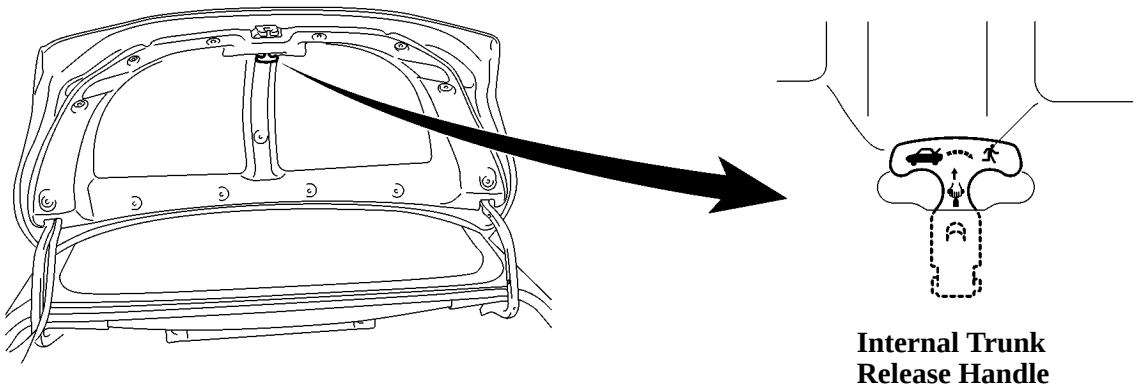

025BO27TE

■ CHILD RESTRAINT SYSTEM

CRS (Child Restrain System) lower anchorage for securing child seats has been provided behind the seat cushion of the rear seat.
Three CRS anchor brackets for securing a child seat are provided above the package tray trim.

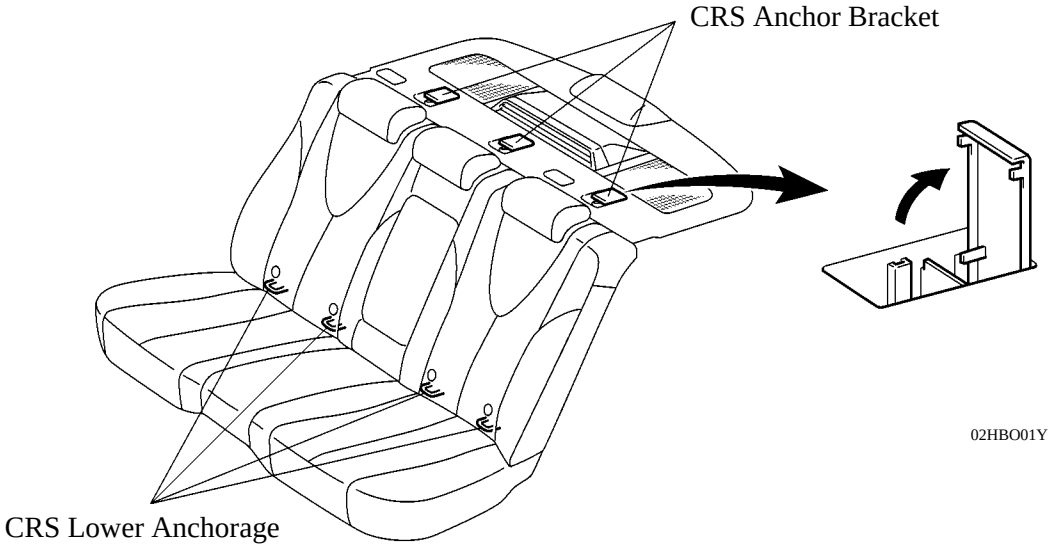

02HBO01Y

Downloaded from www.Manualslib.com manuals search engine

■ SEAT BELT

1. General

The following types of seat belts are provided.

Seat Position	Seat Belt Type	Remarks
Driver	3-point ELR*1	Electrical Sensing type Pretensioner and Force Limiter
Front Passenger	3-point ELR*1 & ALR*2	Electrical Sensing type Pretensioner and Force Limiter
Rear Passenger	3-point ELR*1 & ALR*2	—

*1: Emergency Locking Retractor
*2: Automatic Locking Retractor

2. Pretensioner and Force Limiter

In accordance with the ignition signal from the airbag sensor assembly, the seat belt pretensioner activates simultaneously with the deployment of SRS airbag for the driver and front passenger.
In the beginning of the collision if the tension of the seat belt applied to the occupant reaches a predetermined level, the force limiter activates to control the force.
Even if the front passenger airbag is not deployed in accordance with the front passenger occupant classification system, the pretensioner and force limiter for the front passenger will be deployed.

▶ Front Airbag Operation ◀

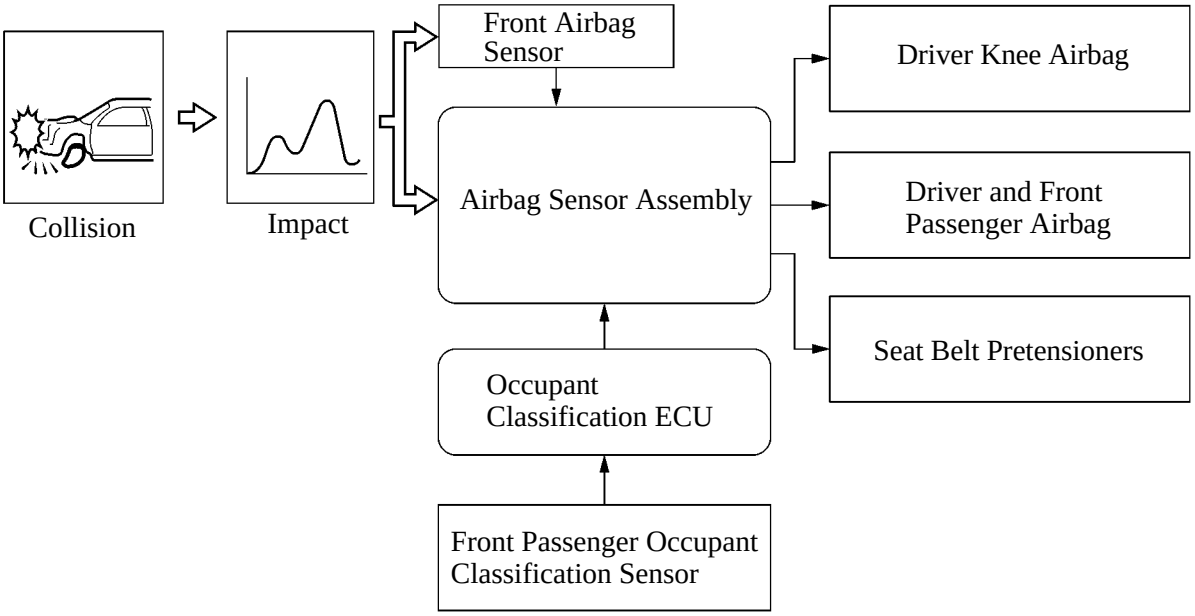

277BO21

Downloaded from www.Manualslib.com manuals search engine

- MEMO -

Downloaded from www.Manualslib.com manuals search engine

■ATF (AUTOMATIC TRANSMISSION FLUID) WS

- ATF WS is used to reduce the resistance of the ATF and improve the fuel economy by reducing its viscosity in the practical operating temperature range. At higher fluid temperatures, the viscosity is the same as that of ATF Type T-IV, which ensures the durability of the automatic transaxle.
- ATF WS and other types of ATF (ATF Type T-IV, D-II) are not interchangeable.

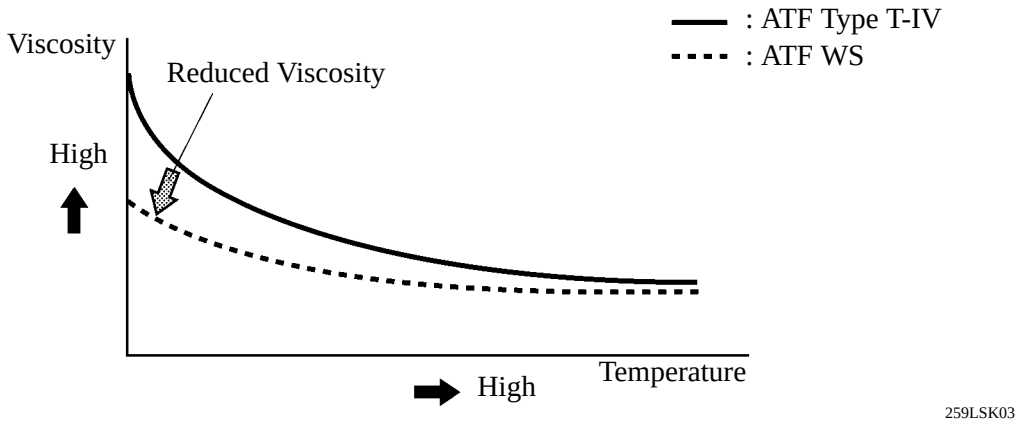

Downloaded from www.Manualslib.com manuals search engine

CHASSIS

P311 HYBRID TRANSAXLE

■DESCRIPTION

- The P311 hybrid transaxle is used on the ’07 Camry Hybrid model.
- Containing a MG2 (Motor Generator No.2) for driving the vehicle and a MG1 (Motor Generator No.1) for generating electrical power, this hybrid transaxle uses a continuously variable transmission mechanism with compound gear unit (which consists of a motor speed reduction planetary gear unit and a power split planetary gear unit) that achieve smooth and quiet operation.
- A transaxle damper that consists of a coil spring with low-twist characteristics is used in order to absorb the torque fluctuation in the drive force of the engine.
- This transaxle uses two lubrication mechanisms concurrently: a lubrication mechanism consisting of a trochoid type oil pump placed on the main shaft, and a lubrication mechanism consisting of an oil slinger on the final gear. The concurrent use of the two mechanisms reduces the drive loss of the oil pump.

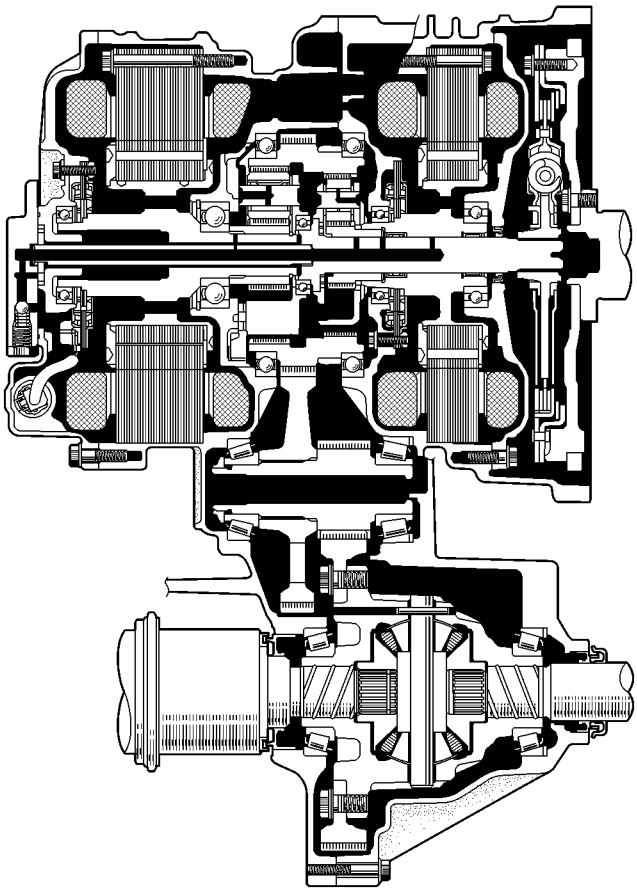

02HCH31Y

Downloaded from www.Manualslib.com manuals search engine

▶ Specifications ◀

Transaxle Type		P311
Power Split Planetary Gear unit	The No. of Ring Gear Teeth	78
	The No. of Pinion Gear Teeth	23
	The No. of Sun Gear Teeth	30
Motor Speed Reduction Planetary Gear unit	The No. of Ring Gear Teeth	57
	The No. of Pinion Gear Teeth	18
	The No. of Sun Gear Teeth	23
Counter Gear	The No. of Drive Gear Teeth	54
	The No. of Driven Gear Teeth	55
Final Gear	The No. of Drive Gear Teeth	23
	The No. of Driven Gear Teeth	80
Total Deceleration Ratio		3.542
Oil Capacity	Liters (US qts, Imp. qts)	3.8 (4.0, 3.3)
Oil Type		Toyota Genuine ATF WS
Weight (Reference)*	kg (lb)	113.3 (249.8)

*: Weight shows the figure with the fluid fully filled.

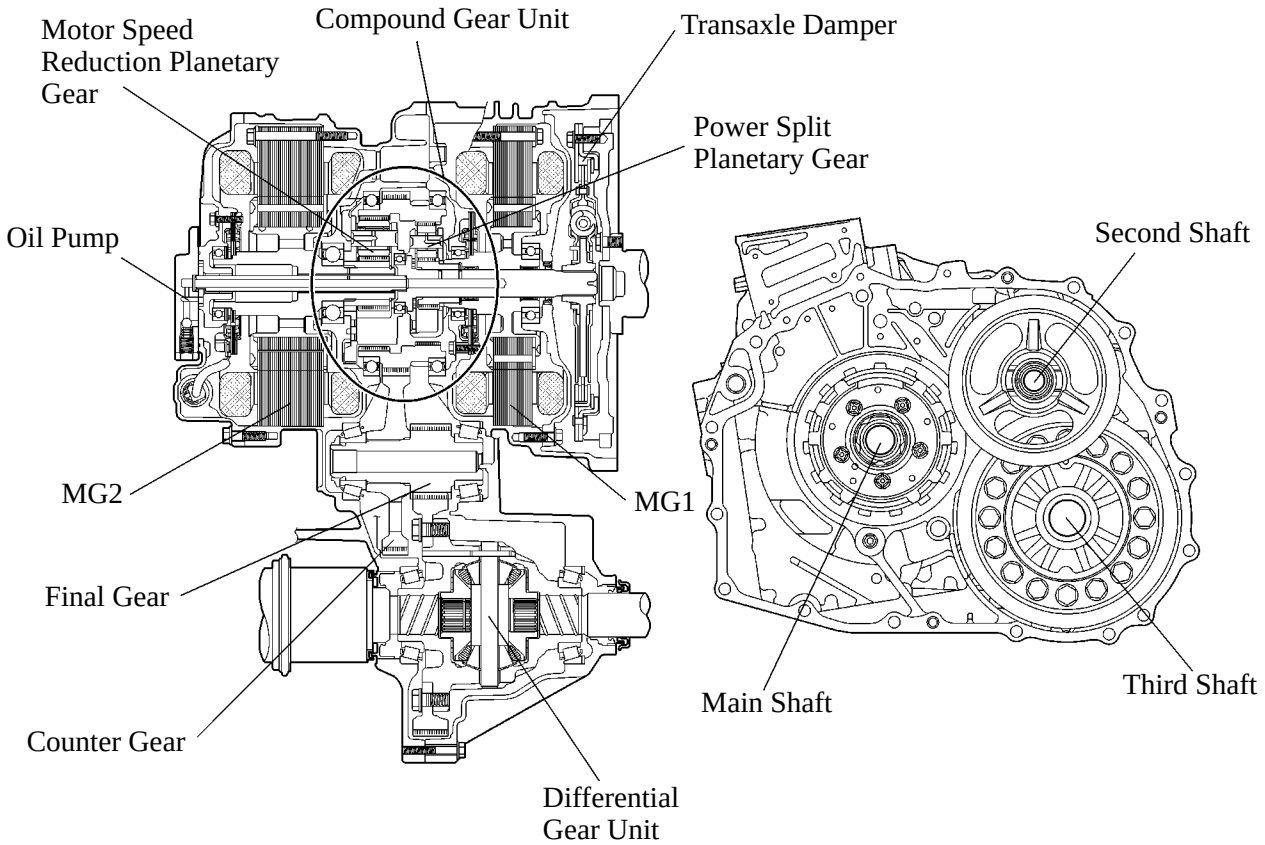

02HCH32Y

Downloaded from www.Manualslib.com manuals search engine

■LUBRICATION MECHANISM

- This transaxle is lubricated by a trochoid type oil pump placed on the main shaft.
- Furthermore, it uses a final gear with an oil sling type lubrication mechanism. This construction minimizes the drive torque of the oil pump, which reduces the drive loss.
- An oil catch tank is used in this transaxle in order to supply oil in a stable manner. The oil catch tank temporarily stores the oil that is slung up, and supplies oil to each gear train from there. Furthermore, oil holes are provided in the oil catch tanks in order to efficiently supply oil to MG1 and MG2.

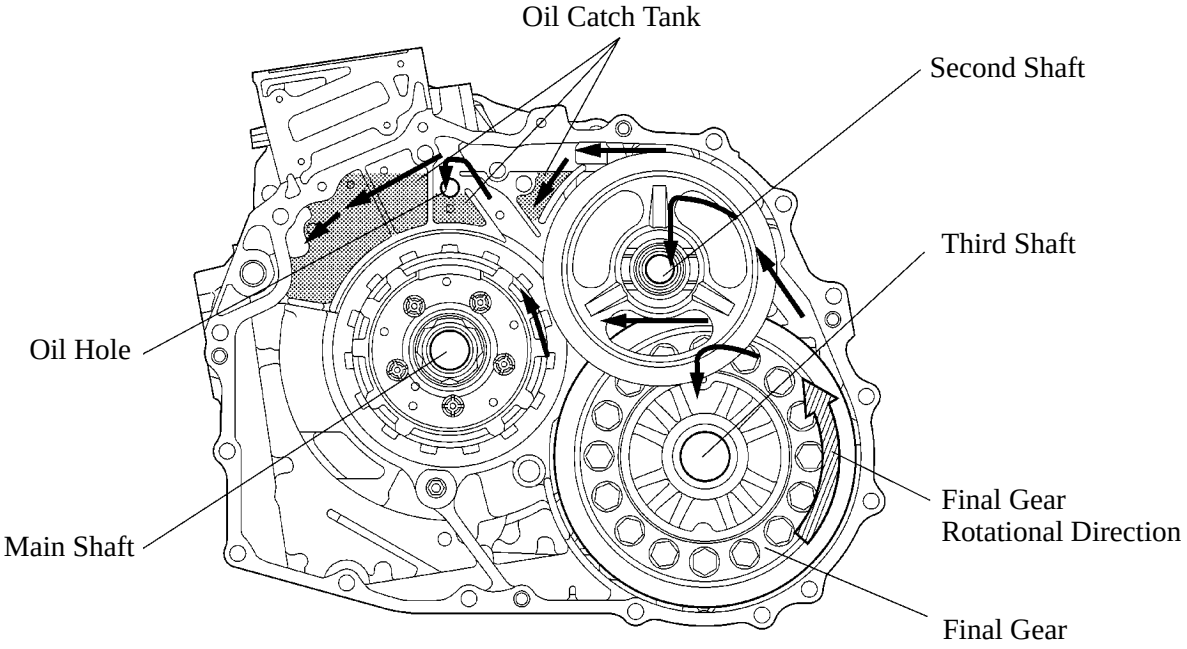

Diagram of Oil Flow

02HCH36Y

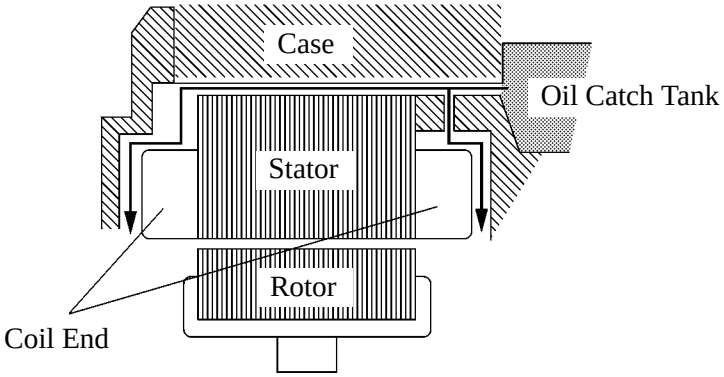

Diagram of Motor Generator Cooling

277CH09

Downloaded from www.Manualslib.com manuals search engine

■TRANSAXLE UNIT

1. General

- This hybrid transaxle consists primarily of MG1 and MG2, a compound gear unit (which consists of a motor speed reduction planetary gear unit and a power split planetary gear unit), a counter gear unit, and a differential gear unit.
- This transaxle has a three-shaft configuration. The compound gear unit (consisting of the motor speed reduction planetary unit and a power split planetary gear unit), MG1 and MG2 are provided on the main shaft. The counter driven gear and the final drive gear are provided on the second shaft. The differential ring gear and the differential gear unit are provided on the third shaft.
- The engine, MG1 and MG2 are mechanically joined via the compound gear unit.
- The compound gear unit contains a motor speed reduction planetary gear unit and a power split planetary gear unit. The motor speed reduction planetary gear unit, whose purpose is to reduce motor speed, is used to enable the high-speed, high-output MG2 to adapt optimally to the power split planetary gear unit. The power split planetary gear unit splits the motive force of the engine two ways: one to drive the wheels, and the other to drive the MG1, so that it can function as a generator.
- In the motor speed reduction planetary gear unit, the sun gear is coupled to the output shaft of MG2, and the carrier is fixed.

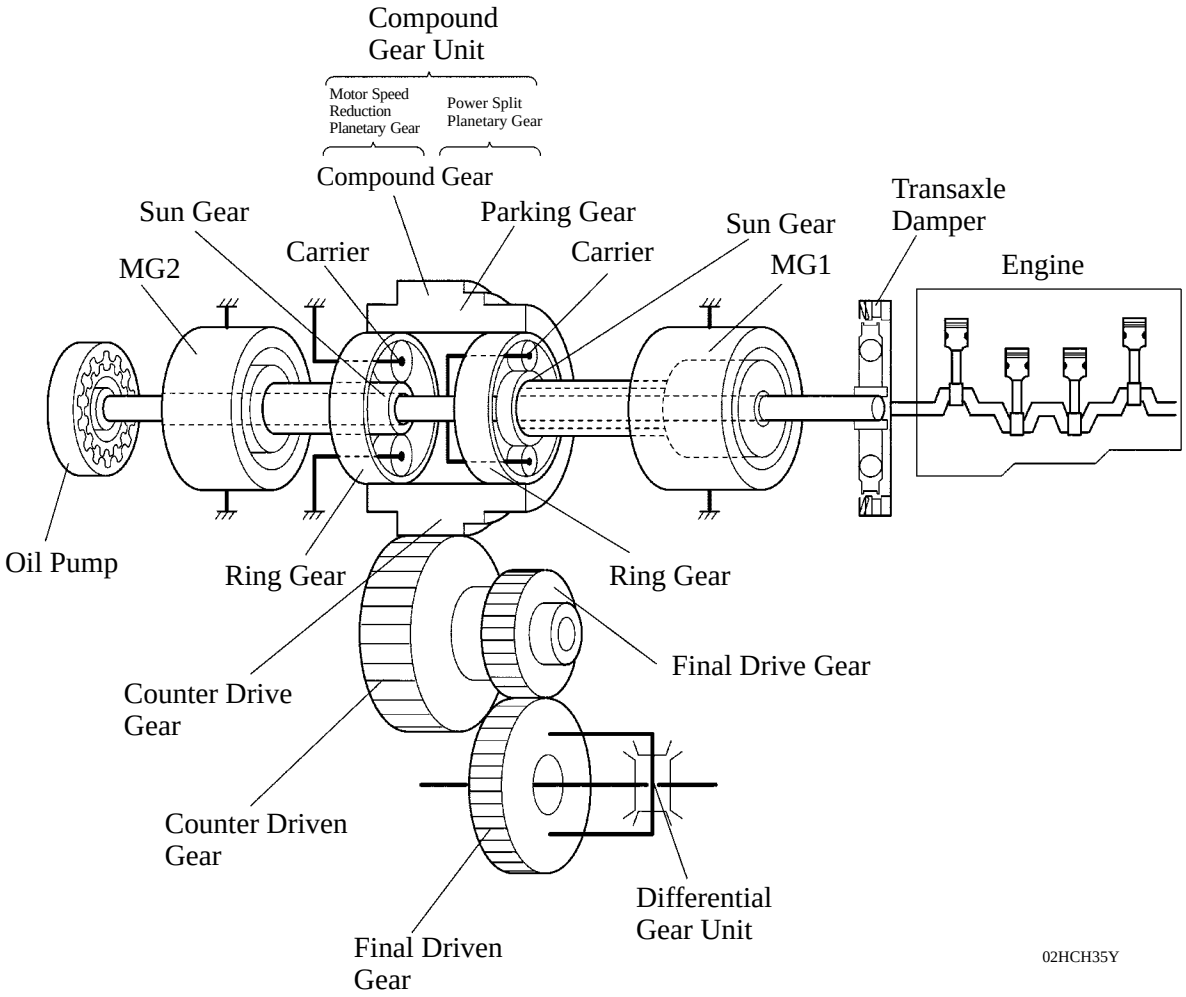

Downloaded from www.Manualslib.com manuals search engine

2. Compound Gear Unit

General

The compound gear unit consists of a motor speed reduction planetary gear, and a power split planetary gear. Each planetary ring gear is integrated with the compound gear. Furthermore, this compound gear is integrated with a counter drive gear and parking gear.

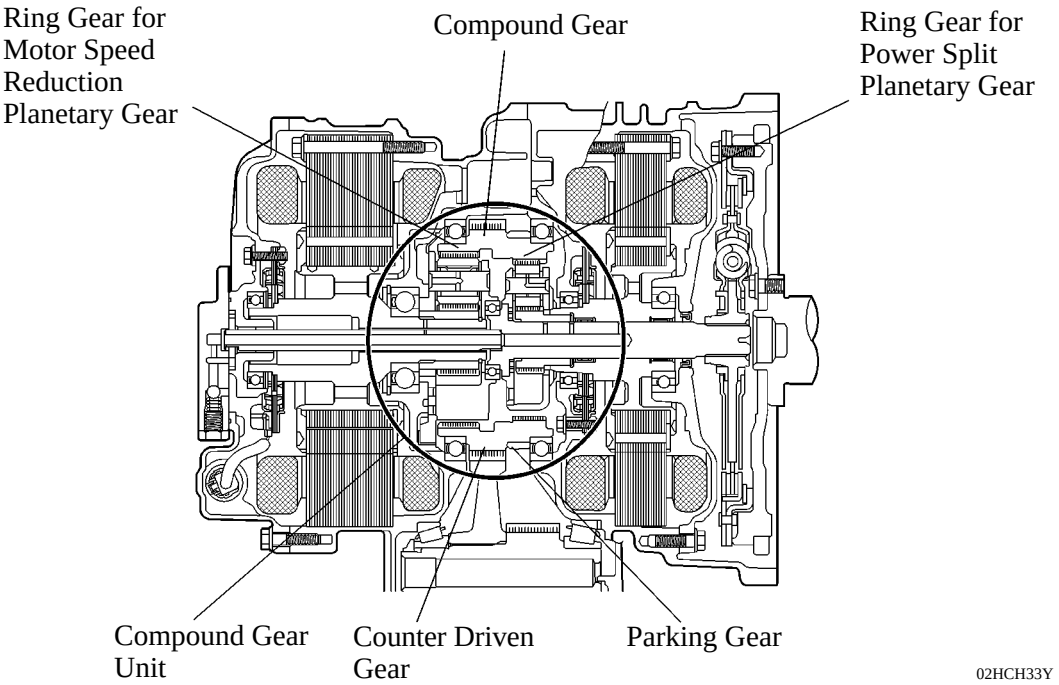

Item		Connection
Power Split Planetary Gear	Sun Gear	MG1
	Ring Gear	Output (Wheels)
	Carrier	Engine Output Shaft
Motor Speed Reduction Planetary Gear	Sun Gear	MG2
	Ring Gear	Output (Wheels)
	Carrier	Fixed

Downloaded from www.Manualslib.com manuals search engine

Power Split Planetary Gear

The power split planetary gear in the compound gear unit transmits the motive force in the four ways described below.

- The engine motive force, which is input by the carrier, is output to the ring gear. Furthermore, the MG2 motive force is output to the ring gear via the motor speed reduction planetary gear. The sum of these two motive forces is transmitted in order to drive the wheels.

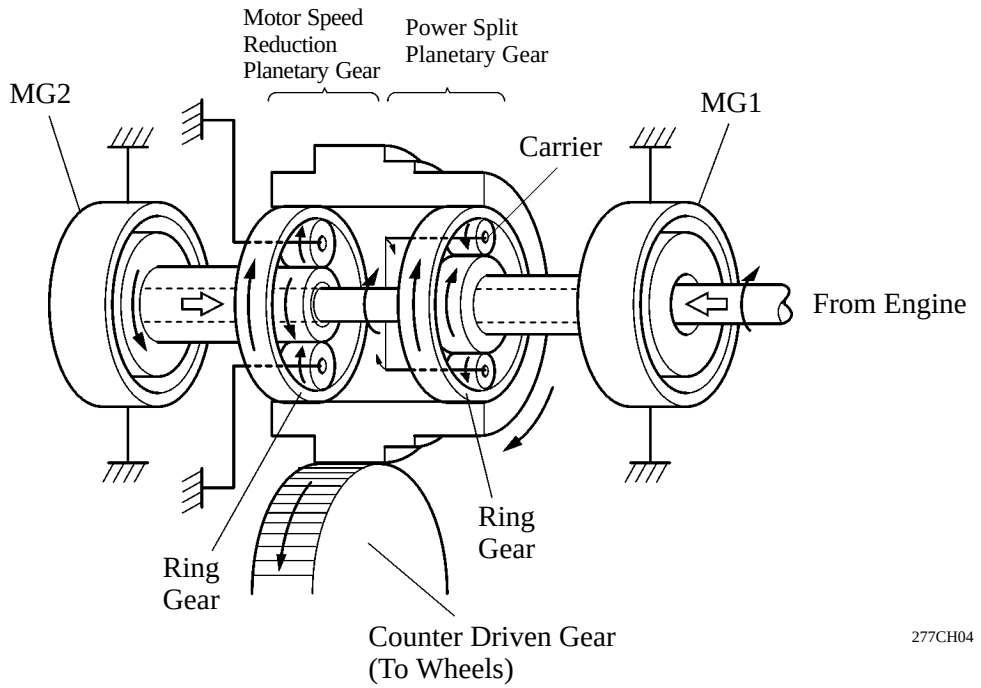

- The MG2 motive force is output to the ring gear via the motor speed reduction planetary gear, and this motive force is transmitted in order to drive the wheels.

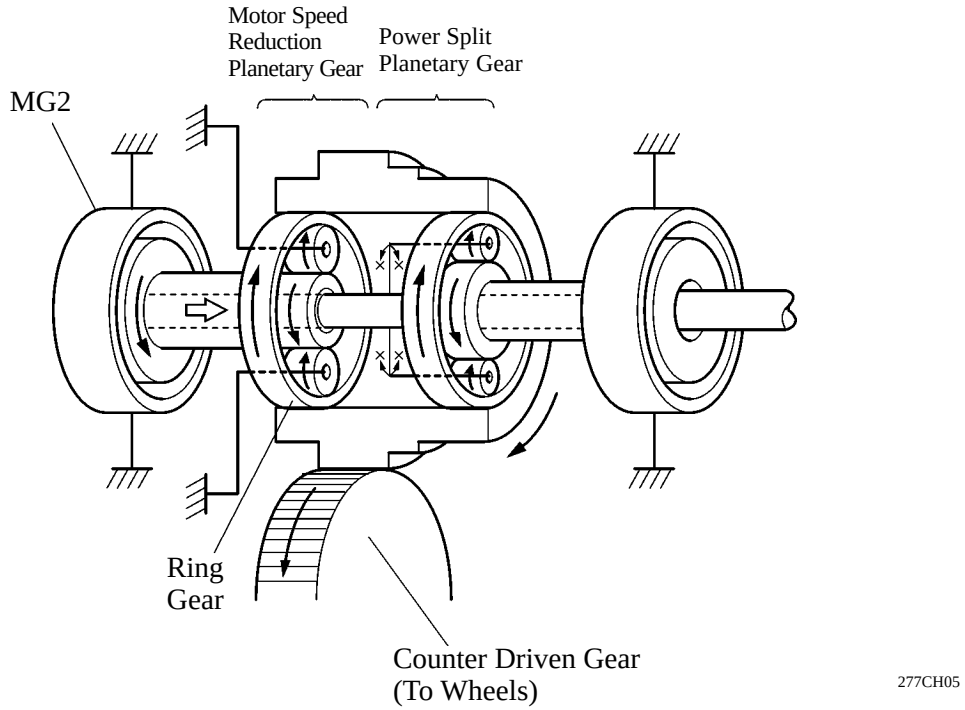

Downloaded from www.Manualslib.com manuals search engine

- The engine motive force, which is input by the carrier, is output to the sun gear. Thus, the motive force is transmitted in order to operate MG1 as a generator.

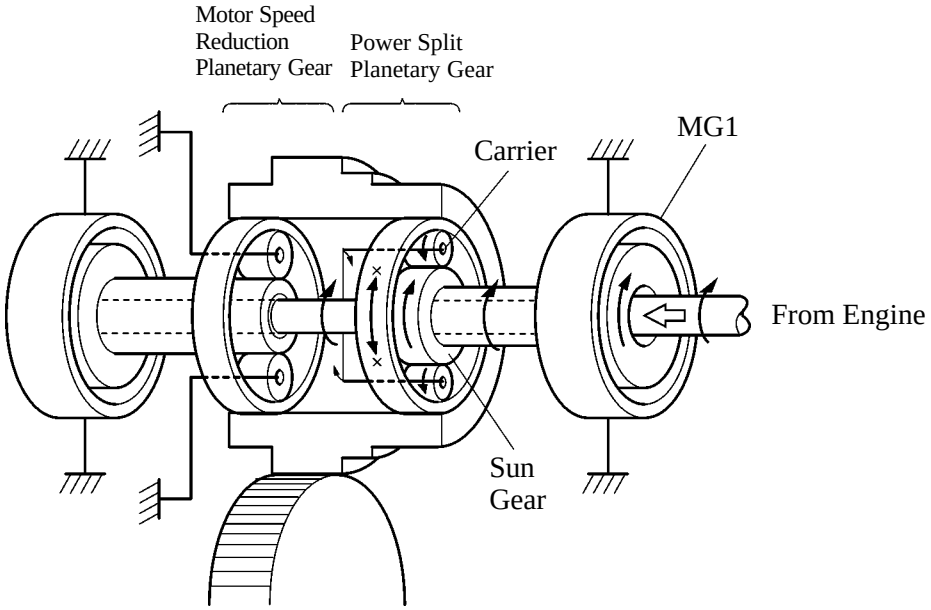

277CH27

- The MG1 motive force is input by the sun gear and output to the carrier. Thus, the motive force is transmitted in order to start the engine.

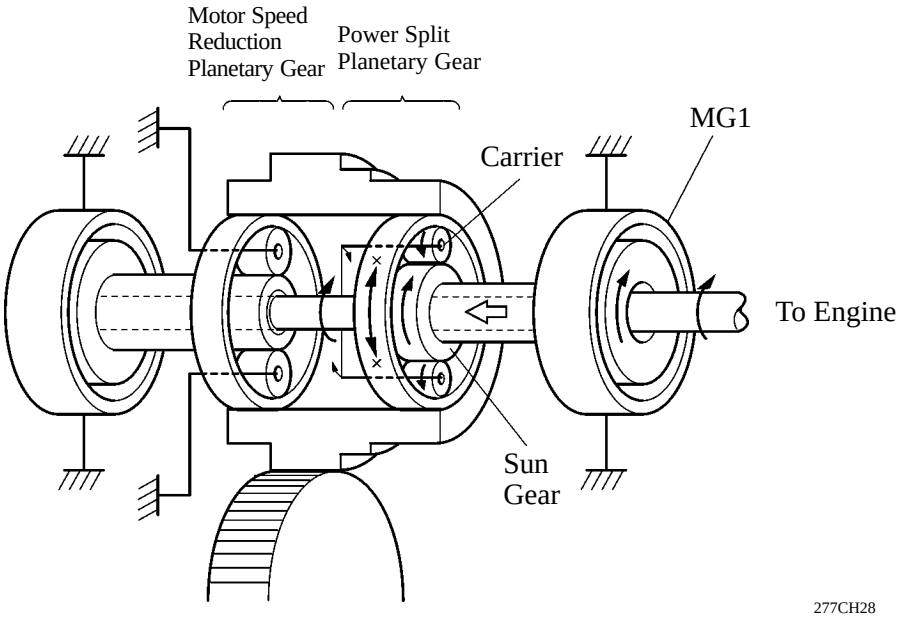

277CH28

Downloaded from www.Manualslib.com manuals search engine

Motor Speed Reduction Planetary Gear

The carrier of the motor speed reduction planetary gear, which is located in the compound gear unit, is fixed. The MG2 motive force is input by the sun gear and is output to the ring gear, in order to drive the wheels. For this reason, the motor speed reduction planetary gear has a function to reduce the speed of MG2 and increase torque, in accordance with a set gear ratio.

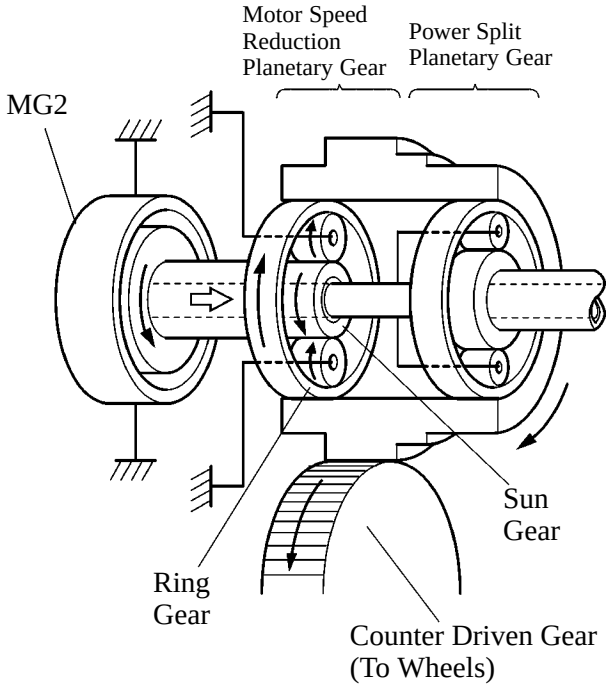

3. Gear Train

This transaxle transmits the motive force created by the engine and MG2 to the counter drive gear and the counter driven gear of the compound gear unit, via the final gear, and to the differential gear unit, in order to drive the front wheels.

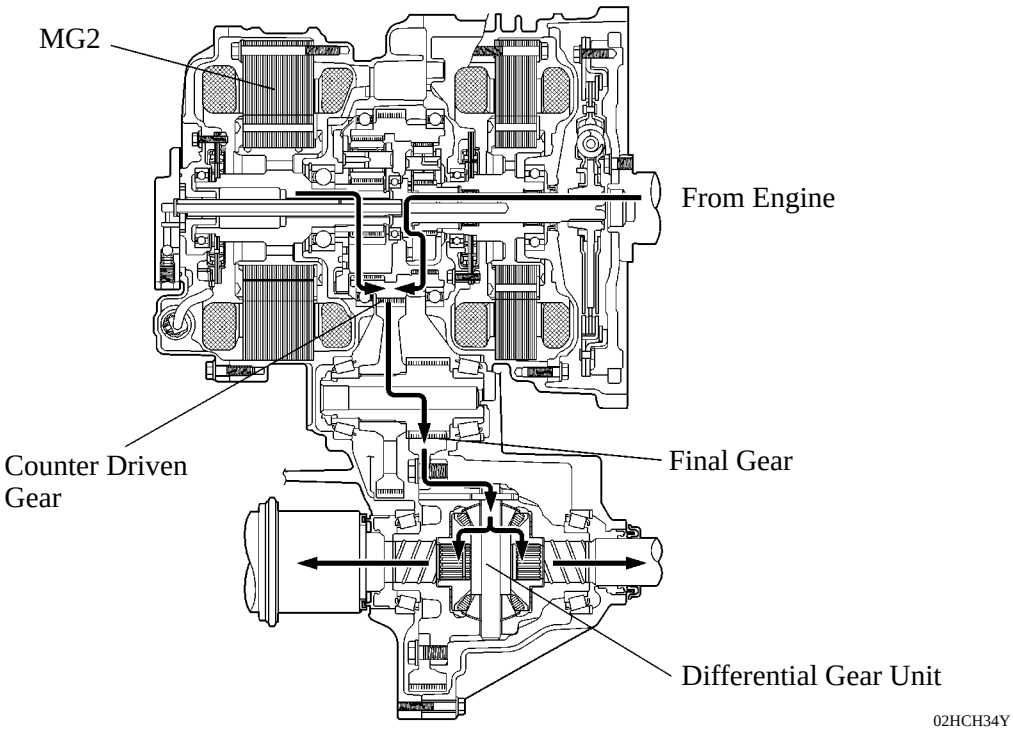

Downloaded from www.Manualslib.com manuals search engine

4. Differential Gear Unit

For the differential gear unit, a 2-pinion type that is similar to the differential unit of the conventional transaxle is used.

5. Transaxle Damper

A transaxle damper that consists of 4 coil springs with low-twist characteristics is used in order to absorb the torque fluctuation in the drive force of the engine. Furthermore, a torque fluctuation absorbing mechanism that uses a dry-type, single-plate friction material is used. Through the use of the parts, a damper construction that excels in absorbing the vibrations of the engine motive force has been achieved.

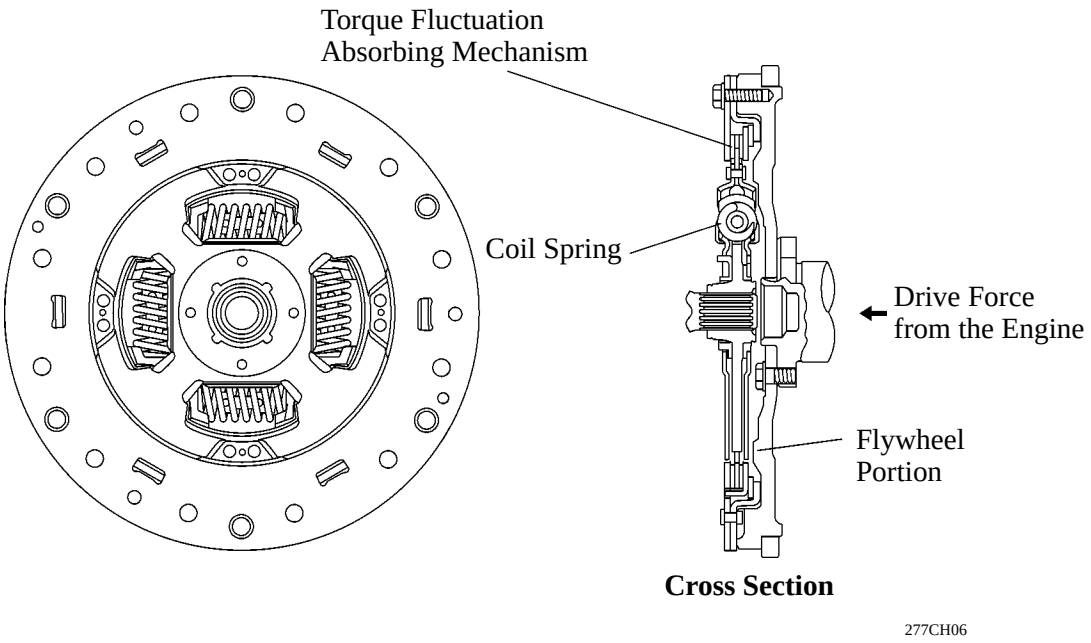

6. MG1 and MG2

MG1 and MG2 are located coaxially at each end of the compound gear unit.
MG1 connects to the sun gear of the power split planetary gear, and MG2 connects to the sun gear of the motor speed reduction planetary gear. For detailed characteristics of MG1 and MG2, refer to MG1 and MG2 in THS II, on page TH-19.

Service Tip

Do not disassemble MG1 or MG2 because they are precision components. If a malfunction is found on either of these components, replace MG1 or MG2 as a complete assembly.

Downloaded from www.Manualslib.com manuals search engine

■SHIFT CONTROL SYSTEM

1. Shift Control

- A shift position sensor is provided in the transaxle to detect the shift position and sends a corresponding signal to the THS ECU. Upon receiving this signal, the THS ECU optimally combines the operation of the engine, MG1 and MG2 in order to produce the respective shift positions (“P”, “R”, “N”, “D”, and “B”).
- However, because the movement of the wheels must be mechanically locked in the P position, a parking lock mechanism is used in the transaxle. Therefore, if the driver operates the shift lever to the P position, a cable and a linkage cause the movement of the transaxle to lock mechanically.

▶ System Diagram ◀

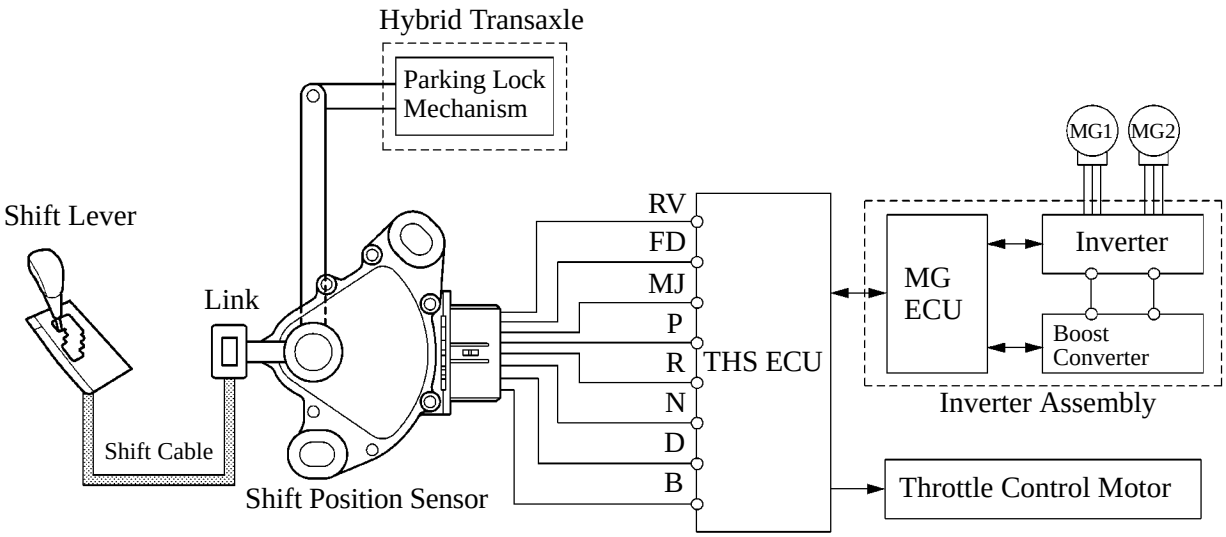

02HCH37TE

▶ Layout of Main Components ◀

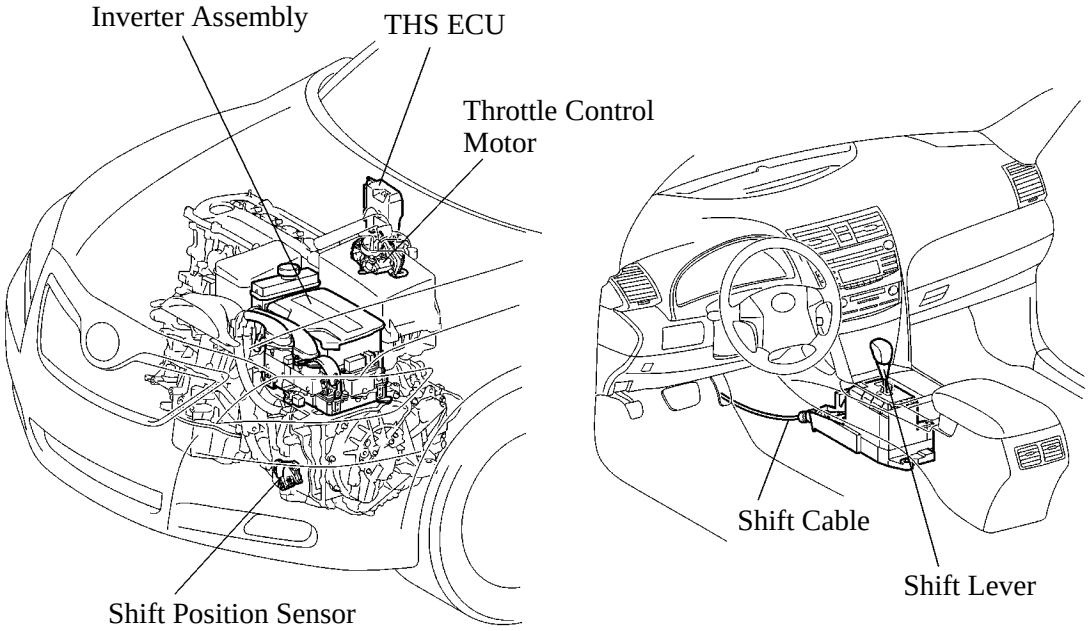

02HCH38TE

Downloaded from www.Manualslib.com manuals search engine

2. Parking Lock Mechanism

- A mechanical parking lock mechanism has been provided in the compound gear.
  The engagement of the parking lock pawl with the parking gear that is integrated with the compound gear locks the movement of the vehicle.
- When the driver moves the shift lever to the P position, the cable at the shift lever causes the No.1 lever to rotate. The rotational movement of the No.1 lever causes the parking lock rod to slide and the parking lock pawl to push up. As a result, the parking lock pawl locks the parking gear.

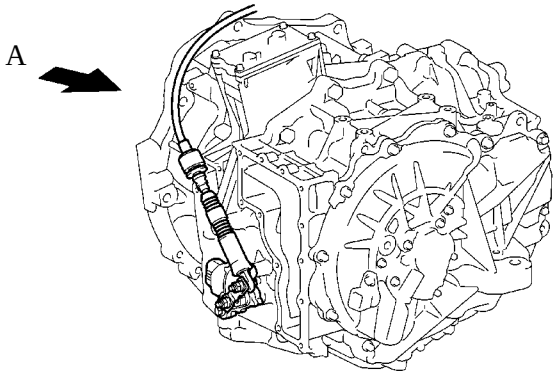

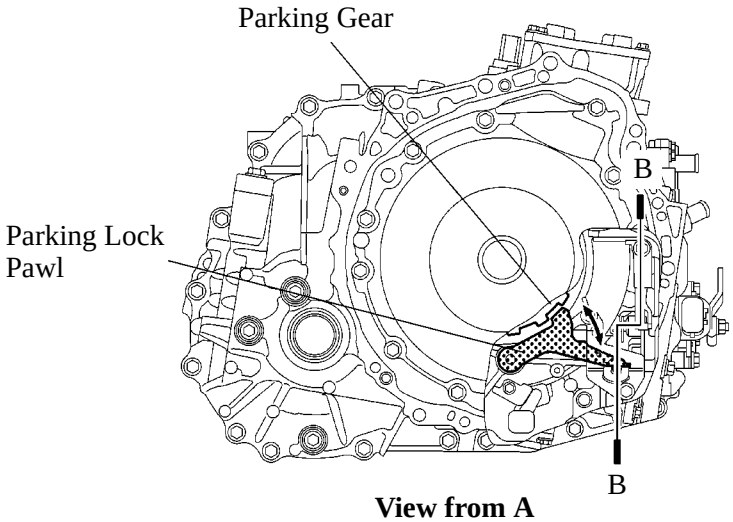

View from A

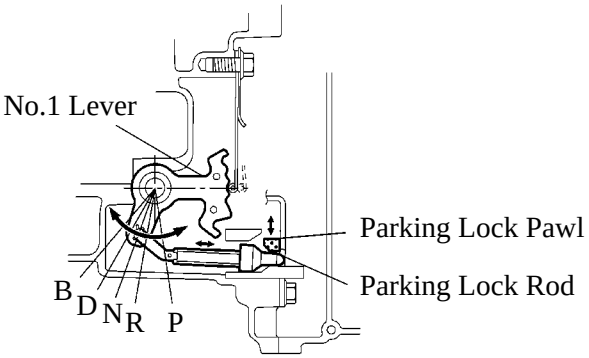

B - B Cross Section

02HCH39TE

Downloaded from www.Manualslib.com manuals search engine

3. Shift Lever

- A 5-position (P, R, N, D, and B) gate type shift lever is used. The gate type shift lever operates on the single-shift operation principle (fore-aft and side-to-side). Therefore, it does not require the use of a shift lever button, which is used on a straight type shift lever. Therefore, it excels in ease of use.
- The shift control cable with a length adjustment mechanism is used.

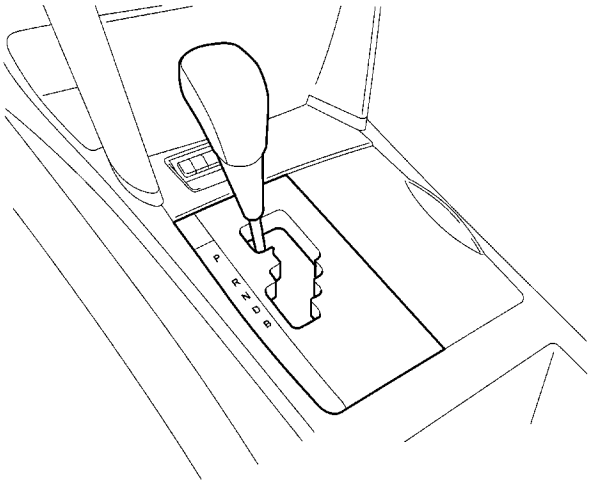

02HCH40TE

Service Tip

The shift control cable is fixed by the lock piece of the adjustment mechanism. Adjustment of the shift control cable is possible by releasing the lock piece from the cable. For details, see the 2007 Camry Hybrid Vehicle Repair Manual (Pub. No. RM02H0U).

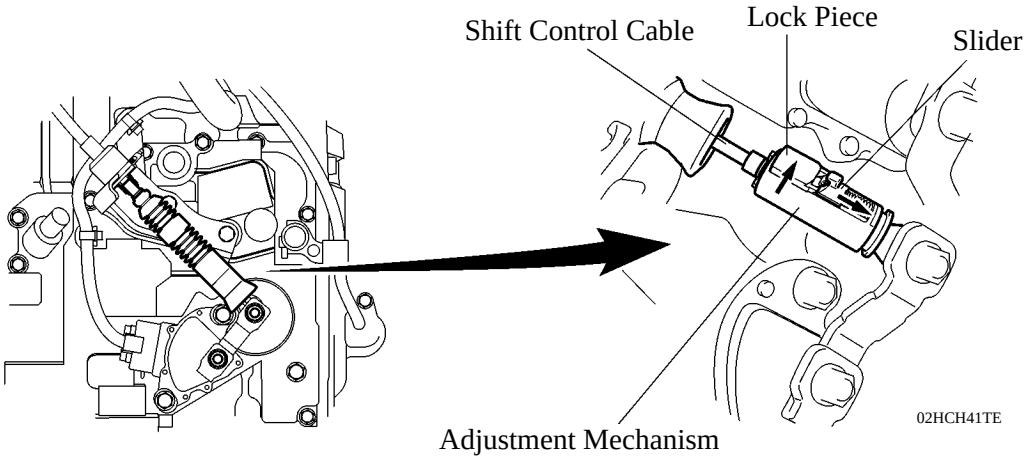

02HCH41TE

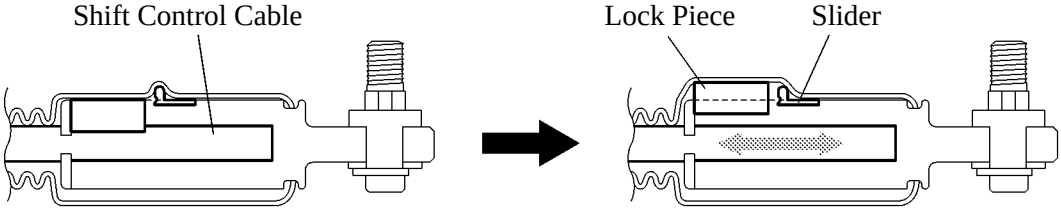

Adjustment Mechanism Cross Section

01YCH48TE

Downloaded from www.Manualslib.com manuals search engine

4. Shift Lock System

General

- The shift lock mechanism prevents the shift lever from being shifted to any position other than the P position, unless the IG-ON mode is selected, and the brake pedal is depressed. This mechanism helps to prevent unintentional acceleration.
- The shift lock system mainly consists of the shift lock ECU, shift lock solenoid and shift lock override button.
- The shift lock solenoid has a built-in P detection switch.

▶ System Diagram ◀

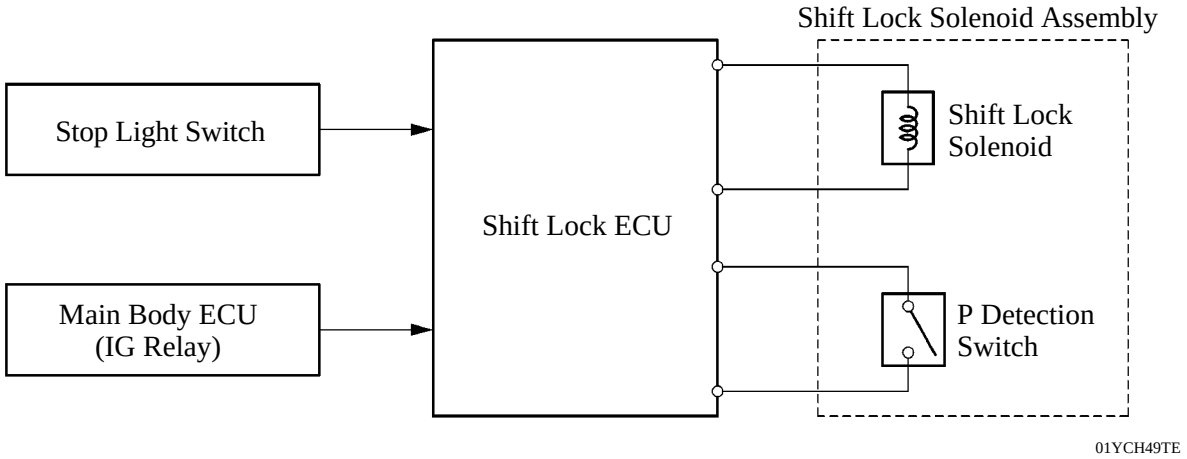

Layout of Main Components

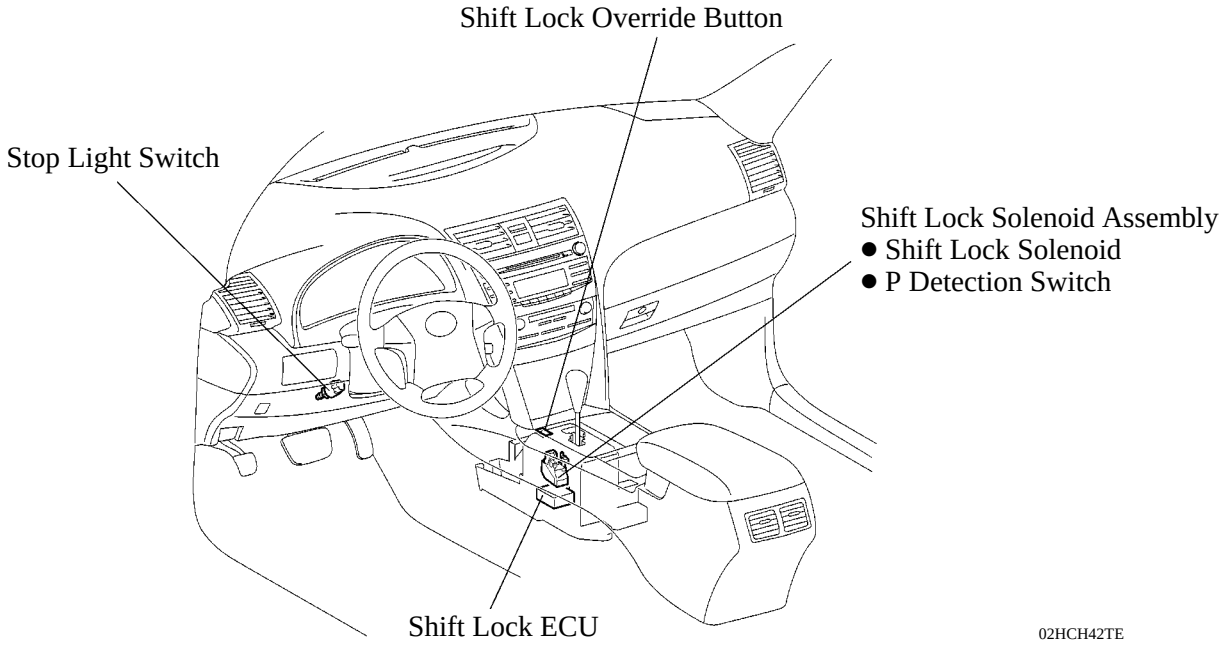

System Operation

- The shift lock ECU uses the P detection switch to detect the shift lever position, and receives inputs from the stop light switch and the main body ECU. Upon receiving these signals, the shift lock ECU turns ON the shift lock solenoid in order to release the shift lock.
- A shift lock override button, which manually overrides the shift lock mechanism, is used.

Downloaded from www.Manualslib.com manuals search engine

DRIVE SHAFT

■DESCRIPTION

The drive shaft uses a tripod type CVJ (Constant Velocity Joint) on the differential side, and Rzeppa type CVJ on the wheel side.

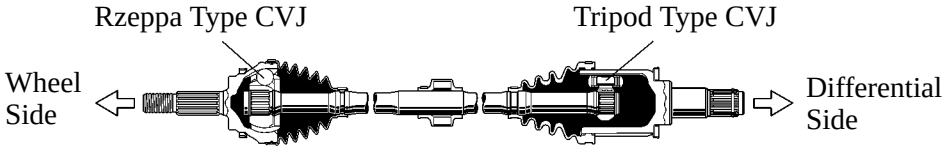

Left-Hand

02HCH43Y

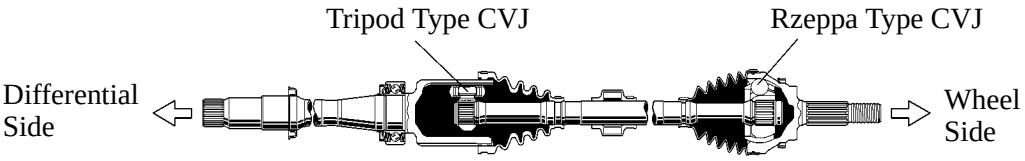

Right-Hand

02HCH44Y

Downloaded from www.Manualslib.com manuals search engine

SUSPENSION AND AXLE

■SUSPENSION

1. General

- MacPherson strut type independent suspension is used for the front.
- Dual link MacPherson strut type independent suspension is used for the rear.

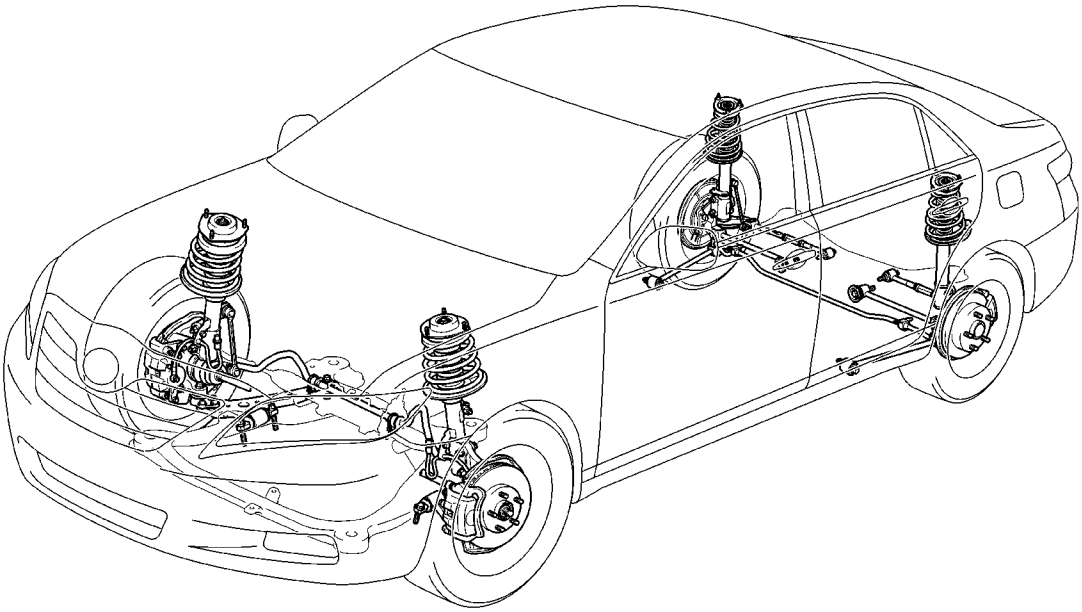

02HCH45Y

▶ Specifications ◀

Front Wheel Alignment	Type		MacPherson Strut
	Tread	mm (in.)	1,575 (62.0)
	Caster	degrees	2°55’
	Camber	degrees	-0 °40’
	Toe-in	mm (in.)	0
	King Pin Inclination	degrees	12°15’
Rear Wheel Alignment	Type		Dual link MacPherson Strut
	Tread	mm (in.)	1,565 (61.6)
	Camber	mm (in.)	-1 °20’
	Toe-in	mm (in.)	4 (0.16)

*: Unload Vehicle Condition

Downloaded from www.Manualslib.com manuals search engine

2. Front Suspension

General

- Through the optimal location of components, and the use of Nachlauf geometry, the front suspension provides excellent riding comfort and controllability.
- Low-pressure (N_2) gas sealed type construction is used to suppress cavitation.

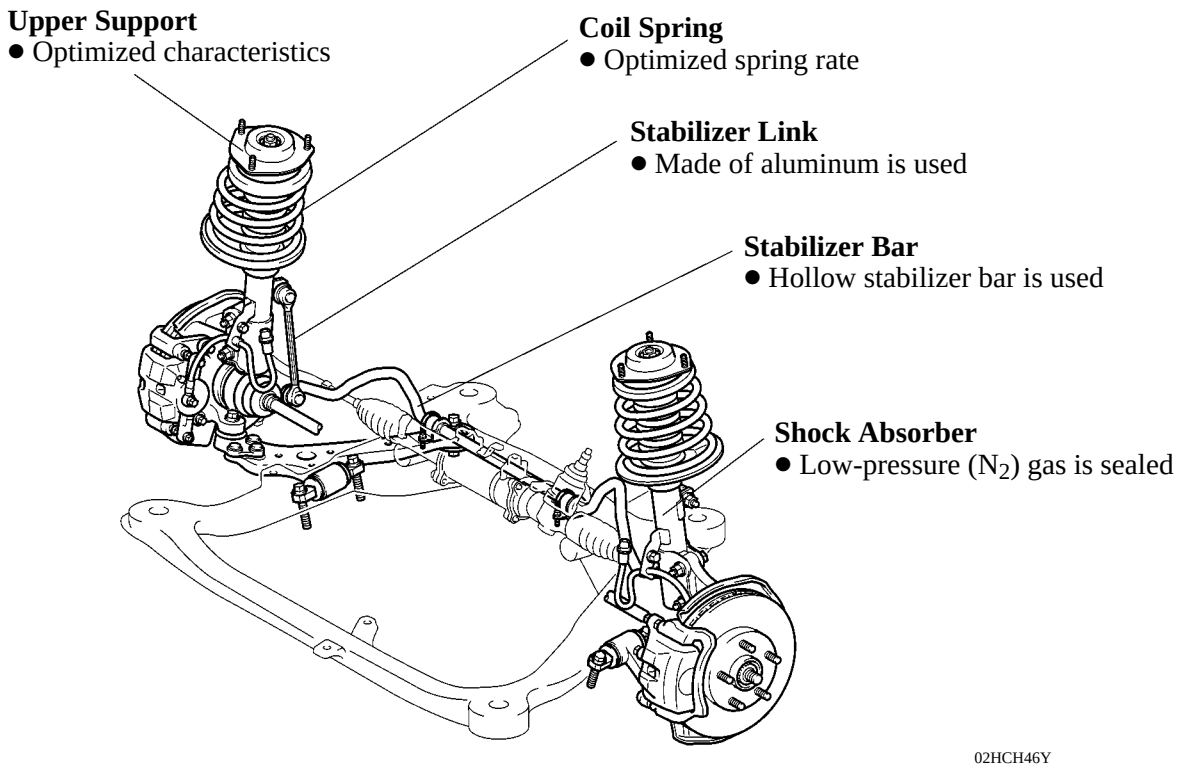

Service Tip

To prevent hazardous conditions, make sure to empty the gas from the shock absorber before discarding a low-pressure (N_2) gas sealed shock absorber. For details, see the 2007 Camry Hybrid Vehicle Repair Manual (Pub. No. RM02H0U).

Nachlauf Geometry

The front suspension uses the Nachlauf geometry in which the king pin axis is located ahead of the axle center. As a result, excellent straight-line stability and steering feel has been improved.

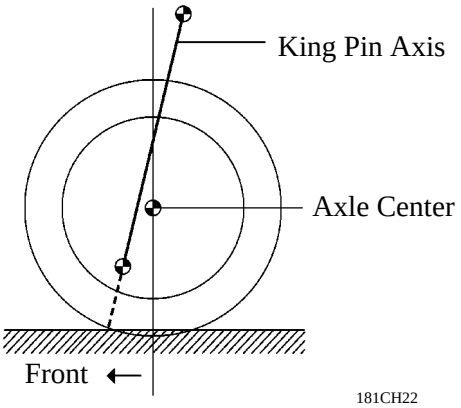

Downloaded from www.Manualslib.com manuals search engine

3. Rear Suspension

General

Rear suspension realizes excellent stability and controllability by optimizing the suspension geometry and the allocation of components.

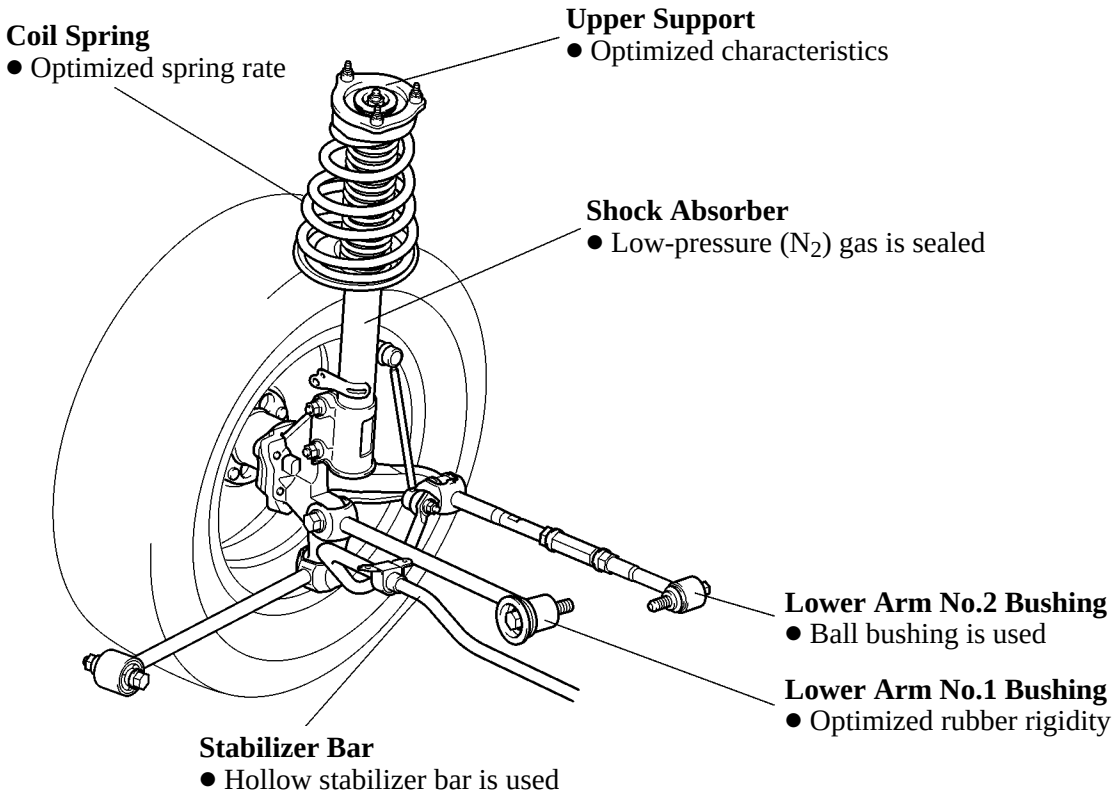

Service Tip

To prevent hazardous conditions, make sure to empty the gas from the shock absorber before discarding a low-pressure (N_2) gas sealed shock absorber. For details, see the 2007 Camry Hybrid Vehicle Repair Manual (Pub. No. RM02H0U).

Downloaded from www.Manualslib.com manuals search engine

Cornering Geometry

When a lateral force is generated, the load becomes distributed to the No.1 and No.2 suspension arms. The illustration shown below indicates the lateral force distribution on suspension arms of the right side rear wheel during left cornering. This causes the wheels to toe-in, in order to ensure the proper stability of the rear suspension.

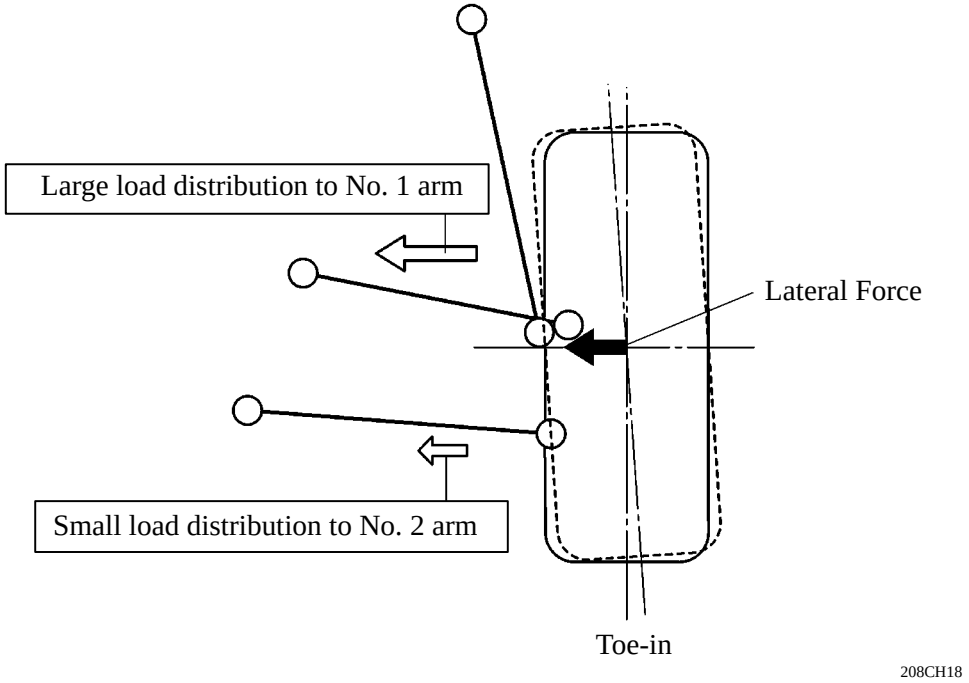

Braking Geometry

When the longitudinal force is generated, the displacement locus of the No.1 and No.2 suspension arms will toe-in as shown below, in order to ensure the stability of the vehicle.

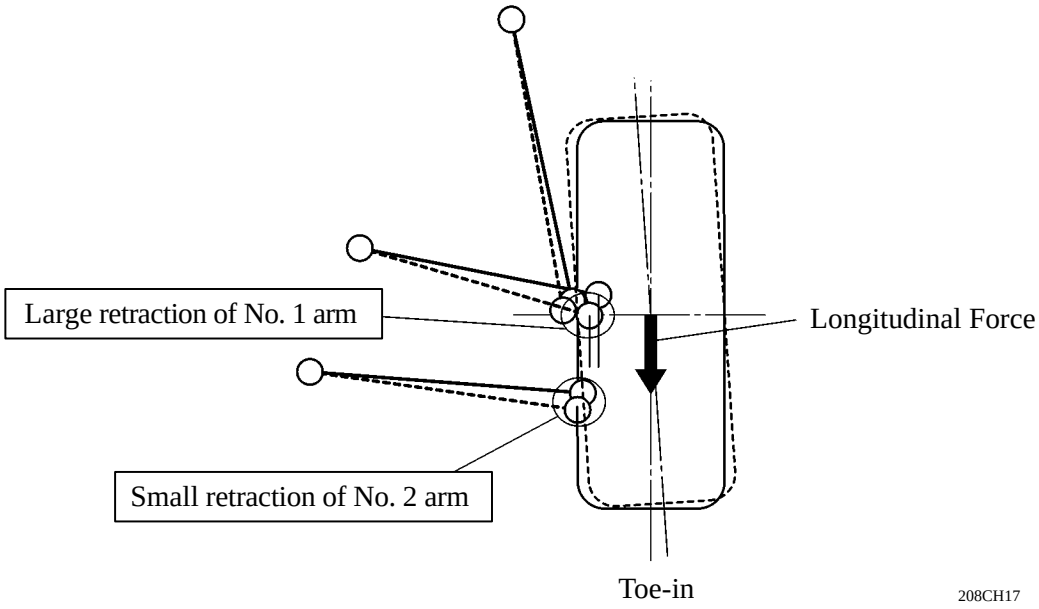

Downloaded from www.Manualslib.com manuals search engine

■AXLE

1. Front Axle

- The front axle uses compact and highly double-row angular ball bearings. The bearings and the axle hub have been integrated to ensure high rigidity, thus realizing excellent driving and braking stability.
- A lock nut (12-point) is used and staked in order to ensure that the axle hub is properly secured. Once removed, this nut cannot be reused.

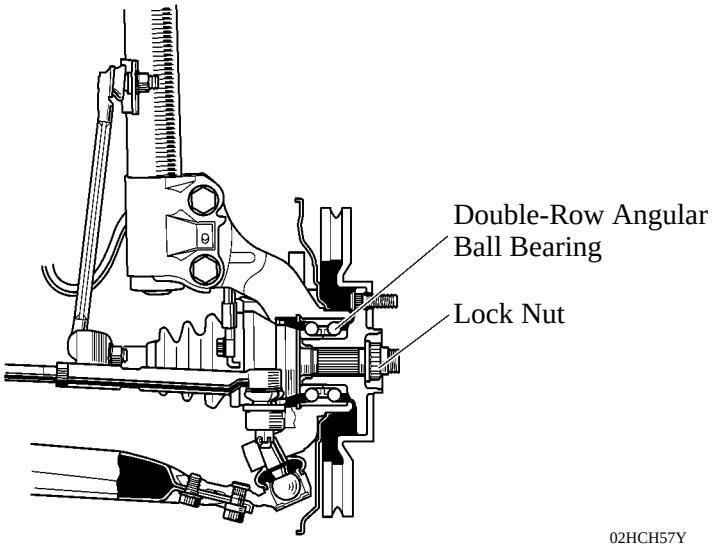

2. Rear Axle

A compact and highly rigid double-row angular ball bearing is used on the front axle. The double-row angular ball bearing and the axle hub have been integrated to ensure high rigidity, thus realizing excellent driving stability and braking stability.

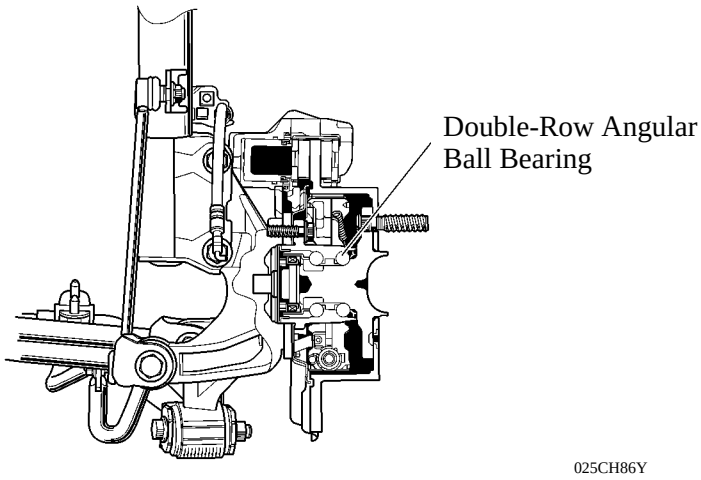

Downloaded from www.Manualslib.com manuals search engine

BRAKE

■DESCRIPTION

1. General

The ’07 Camry Hybrid model has a brake system with the following specifications:

Front Brake Type	Ventilated Disc
Rear Brake Type	Solid Disc
● VDIM (Vehicle Dynamics Integrated Management) ● ECB (Electronically Controlled Brake System)	Standard
Parking Brake Lever Type	Pedal

▶ Specifications ◀

Master Cylinder	Type		Tandem (Portless + Portless)
	Diameter	mm (in.)	19.05 (0.75)
Front Disc Brake	Caliper Type		PE63
	Wheel Cylinder Dia.	mm (in.)	63.5 (2.50)
	Rotor Size (D x T)*	mm (in.)	296 x 28 (11.65 x 1.10)
	Pad Material		PN562H
Rear Disc Brake	Caliper Type		PEAL38
	Wheel Cylinder Dia.	mm (in.)	38.1 (1.50)
	Rotor Size (D x T)*	mm (in.)	281 x 10 (11.06 x 0.39)
	Pad Material		D6234
Parking Brake	Type		Duo Servo
	Drum Inner Dia.	mm (in.)	170.0 (6.69)
Brake Actuator Manufacturer			TOYOTA (In-house Sourcing Parts)

*: D: Outer Diameter, T: Thickness

Downloaded from www.Manualslib.com manuals search engine

2. Component of Brake System

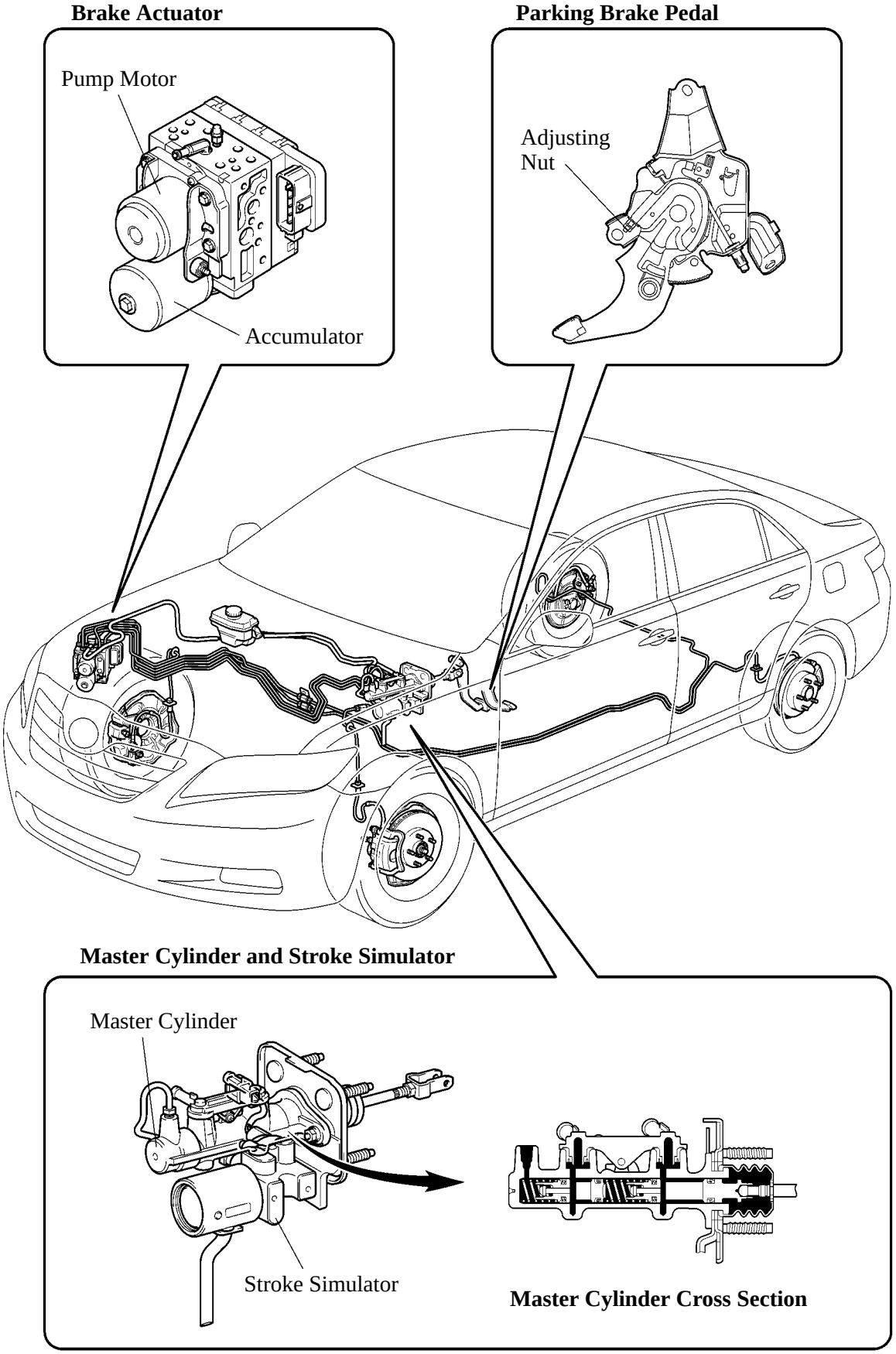

02HCH01Y

Downloaded from www.Manualslib.com manuals search engine

■FRONT BRAKE

- The diameter of the front rotor is 296 mm (11.65 in.). The front rotor is the ventilated type that excels in heat dissipation to ensure reliability.
- The shape of the front dust cover has been optimized to efficiently direct cool air to the ventilated disc, thus ensuring excellent cooling performance.

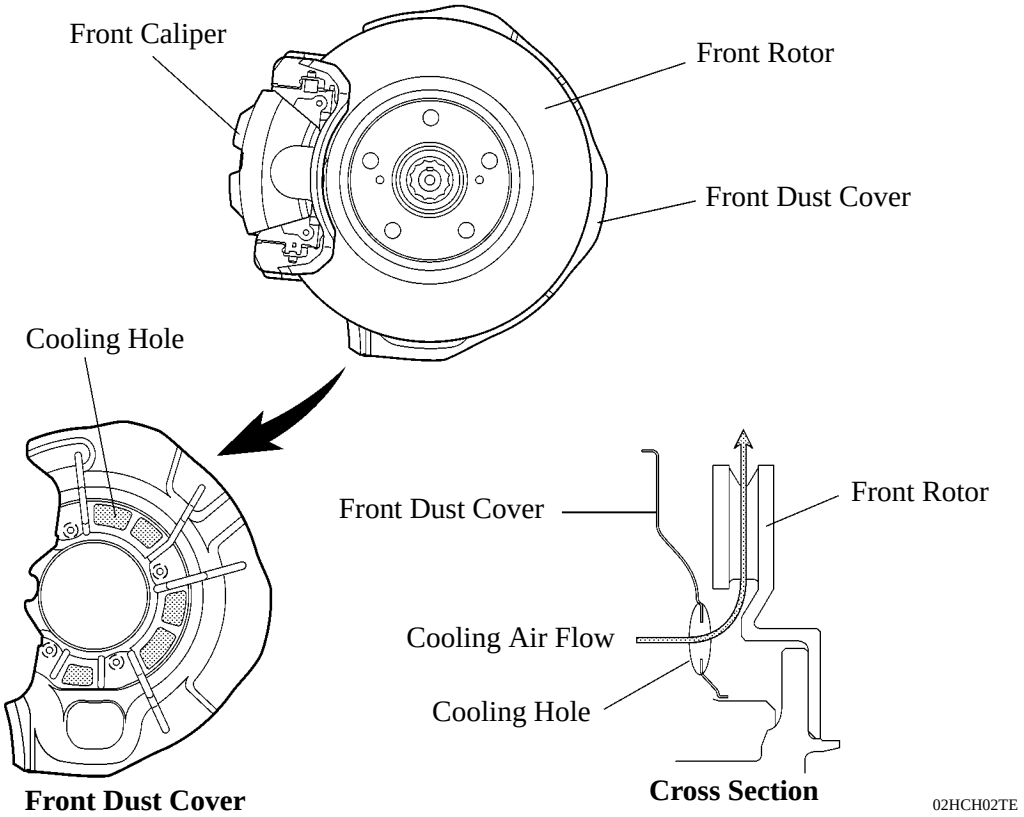

■REAR BRAKE

- The diameter of the rear rotor is 281 mm (11.06 in.). It has a built-in duo servo type parking brake.
- For weight reduction, a rear caliper cylinder made of aluminum is used.

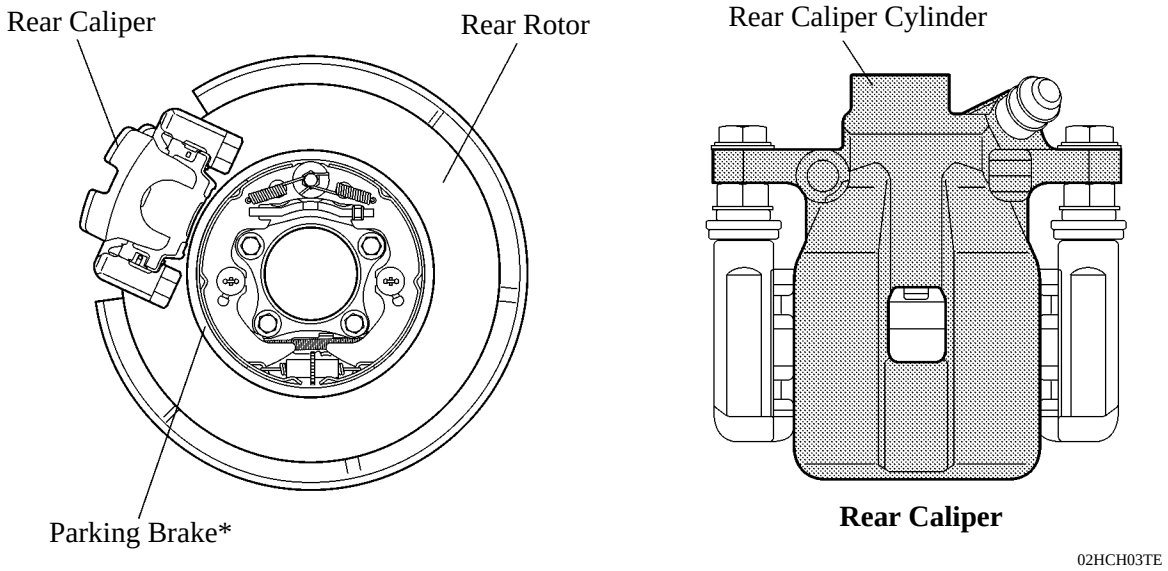

*: Inside view of the parking brake drum

Downloaded from www.Manualslib.com manuals search engine

■BRAKE CONTROL SYSTEM

1. General

- A brake management function, VDIM (Vehicle Dynamics Integrated Management), which delivers comprehensive vehicle movement control, is used.
- An ECB (Electronically Controlled Brake System) is used.
- The brake control system is controlled by the skid control ECU.

2. VDIM (Vehicle Dynamics Integrated Management)

General

- The VDIM manages all functions, such as the ABS with EBD, the Brake Assist, the TRAC, and the VSC. And is operated by the ECB (Electronically Controlled Brake System), which regulates brake fluid pressure. In addition, the regenerative brake cooperative control and power steering cooperative control functions are also available, thus allowing the VDIM to perform the comprehensive management.
- Conventional brake control systems begin to control either the braking or motive force in order to stabilize the vehicle motion, when it becomes unstable due to loss of tire traction. In contrast, in order to maintain stable vehicle control, the VDIM commences controlling the brake, hybrid and steering systems in accordance with changes in balance before the vehicle becomes unstable. As a result, maintenance smooth vehicle control is achieved.
- Conventional brake control systems manage all related functions, such as the ABS with EBD, the Brake Assist, the TRAC and the VSC, independently, according to the vehicle dynamics. In contrast, the VDIM provides smooth control by seamlessly integrating all brake control related functions.

▶ Conceptual Diagram of Control Management ◀

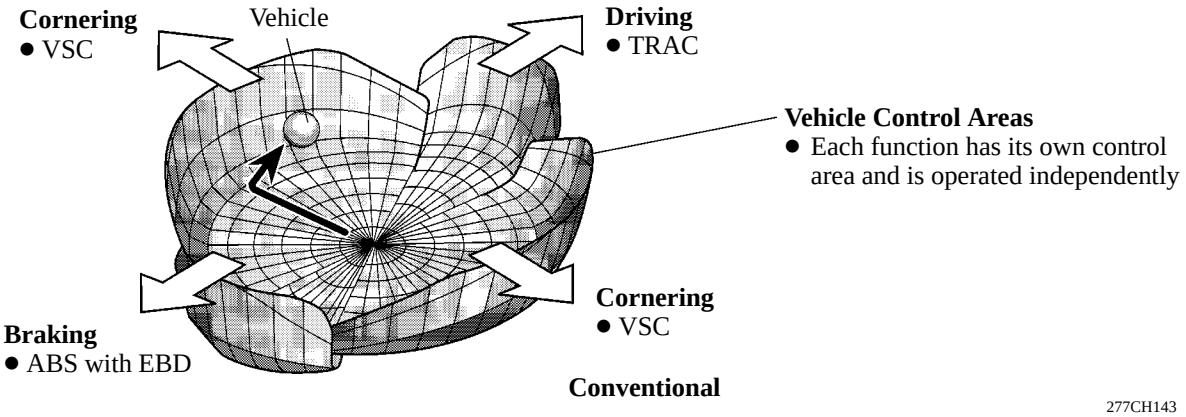

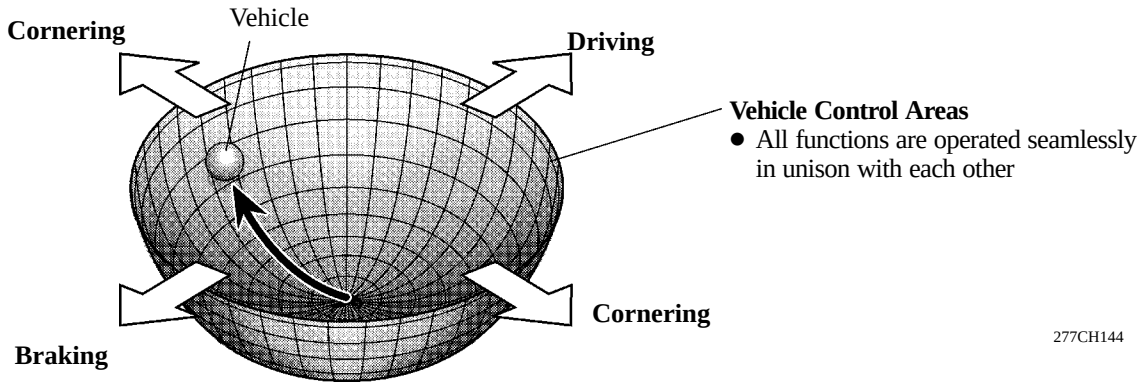

VDIM

Downloaded from www.Manualslib.com manuals search engine

Examples of Control Operation

1) General

The difference in vehicle control during harsh braking situations while cornering, with the VDIM and conventional brake control systems, is as follows:

2) Conventional

Conventional brake control systems calculate vehicle motion based on signals transmitted by yaw rate and deceleration sensors, the speed sensors and the steering sensor, and activates VSC systems when vehicles are determined to be skidding. If the driver brakes suddenly, brake control systems perform assisting control to stabilize the vehicle dynamics, by activating the ABS system when a locked wheel is detected, or by affecting the VSC system when skidding is detected.

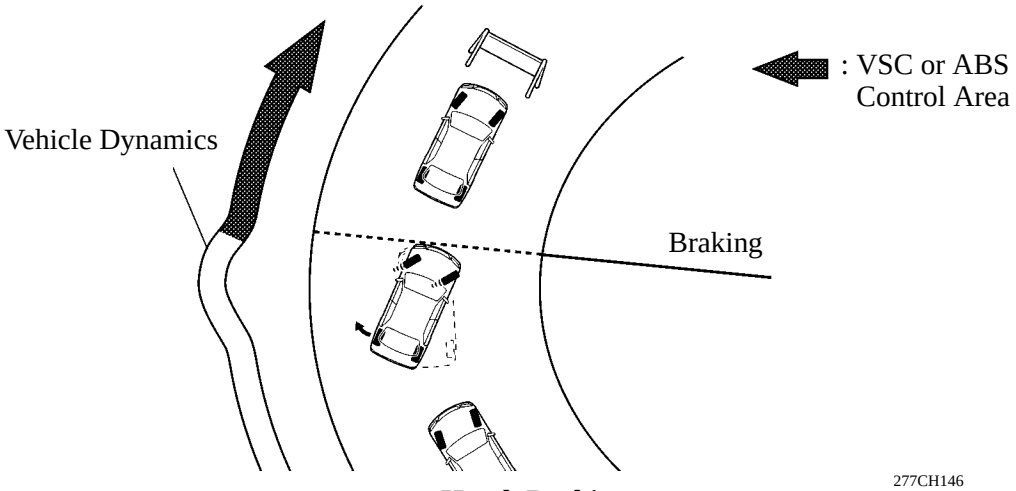

277CH146

Harsh Braking

3) VDIM

The VDIM also calculates vehicle motion based on signals from the yaw rate and deceleration sensor, speed sensors and steering sensor. When the calculations indicate that the vehicle is likely to skid, the VDIM begins vehicle control with the VSC function. In addition, if the driver brakes suddenly, the VDIM reduces vehicle instability to a minimum and assists in achieving optimum driving stability by seamlessly delivering a suitable combination of the VSC and ABS functions.

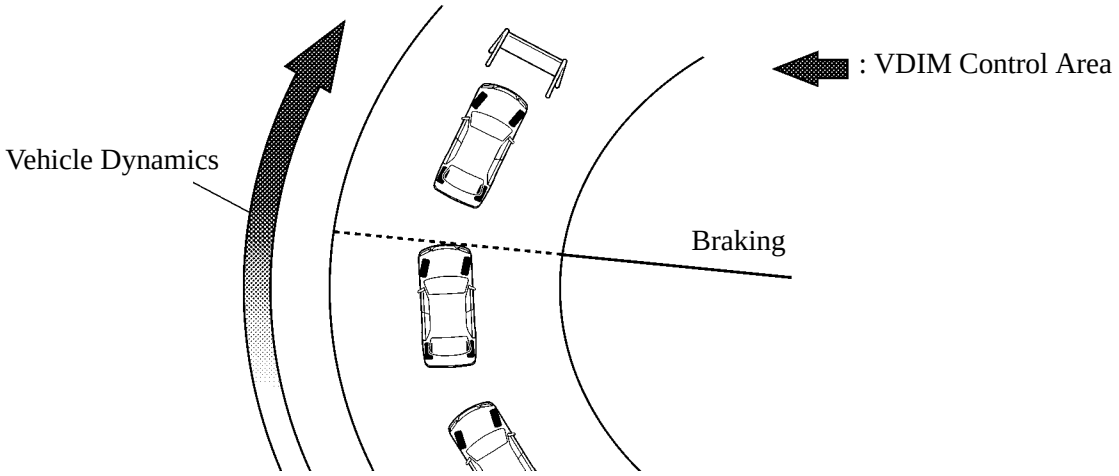

277CH147

Harsh Braking

Downloaded from www.Manualslib.com manuals search engine

Control Configuration of VDIM

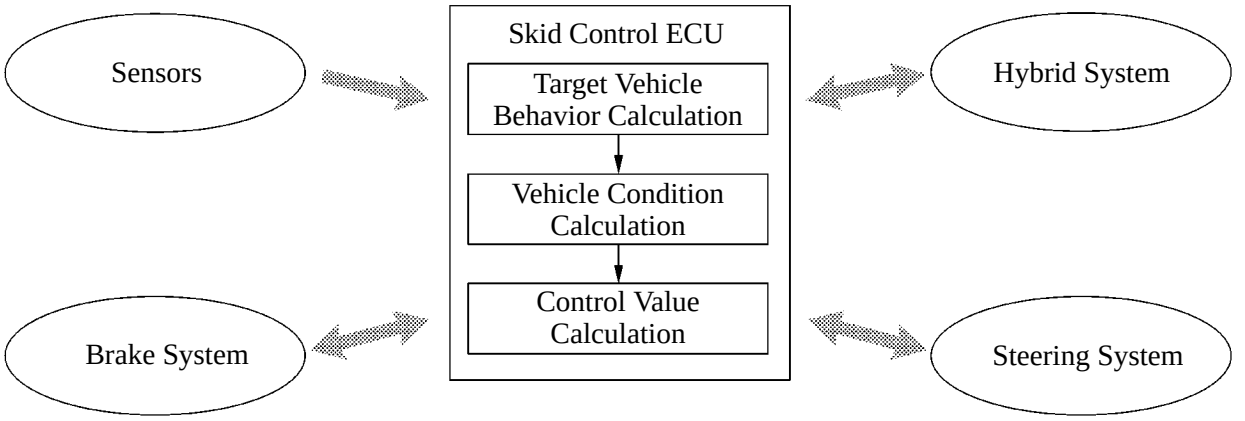

277CH145

Function

The brake control system of the ’07 Camry Hybrid model has a following function:

Brake Control System	Function		Outline
VDIM	Regenerative Brake Cooperative Control		Controls hydraulic braking in order to recover electrical energy by utilizing the regenerative brake of the THS II as much as possible.
	Power Steering Cooperative Control		Effects cooperative control with the EPS ECU in order to provide steering assist in accordance with the operating conditions of the vehicle.
	ECB*		● This system electrically detects the operation information for the brake pedal and generates an appropriate amount of hydraulic brake. ● Executes the hydraulic control of the brake control functions based on the VDIM.
		VSC (Vehicle Stability Control)	The VSC function helps prevent the vehicle from slipping sideways as a result of strong front wheel skid or strong rear wheel skid during cornering.
		TRAC (Traction Control)	The TRAC function helps prevent the drive wheels from slipping if the driver presses the accelerator pedal excessively when starting off or accelerating on a slippery surface.
		ABS (Anti-lock Brake System)	The ABS helps prevent the wheels from locking when the brakes are applied firmly or when braking on a slippery surface.
		EBD (Electronic Brake Force Distribution)	The EBD control utilizes ABS, realizing the proper brake force distribution between front and rear wheels in accordance with the driving conditions. In addition, during cornering braking, it also controls the brake forces of right and left wheels, helping to maintain the vehicle behavior.
		Brake Assist	The primary purpose of the Brake Assist is to provide an auxiliary brake force to assist the driver who cannot generate a large brake force during emergency braking, thus helping the vehicle’s brake performance.

*: ECB (Electronically Controlled Brake System)

Downloaded from www.Manualslib.com manuals search engine

Outline of Regenerative Brake Cooperative Control Function

1) General

- Regenerative brake consists of a resistance force that is generated at the rotational axle in the reverse direction of the rotation of the generator (MG2) that is generating electricity. The greater the generated amperage (battery charging amperage), the greater will be the resistance force.

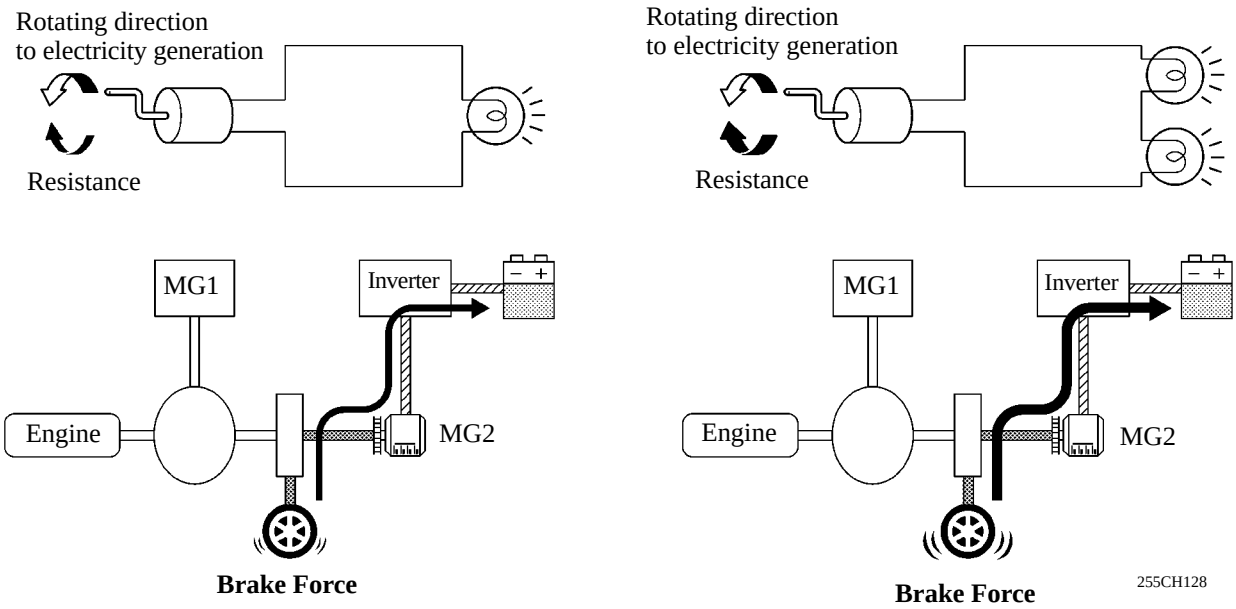

- The drive axle and MG2 are joined mechanically. When the drive wheels rotate MG2 and cause it to operate as a generator, a regenerative brake force of MG2 is transmitted to the drive wheels. This force is controlled by the THS II, which controls the generation of electricity.
  The regenerative brake cooperative control does not rely solely on the braking force of the hydraulic brake system to supply the brake force required by the driver. Instead, by effecting cooperative control with the THS II, this control provides a joint braking force provided by the regenerative brake and the hydraulic brake. As a result, this control minimizes the loss of the kinetic energy associated with the normal hydraulic brake, and recovers this energy by converting it into electrical energy.

Downloaded from www.Manualslib.com manuals search engine

2) Apportioning of the Brake Force

- The apportioning of the brake force between the hydraulic brake and the regenerative brake varies by the vehicle speed and time.
- The apportioning of the brake force between the hydraulic brake and the regenerative brake is accomplished by controlling the hydraulic brake so that the total brake force of the hydraulic brake and the regenerative brake matches the brake force required by the driver.
- If the regenerative brake becomes inoperative due to a malfunction in the THS II, the brake system effects control so that the entire brake force required by the driver is supplied with the hydraulic brake system.

▶ Imagery Drawing ◀

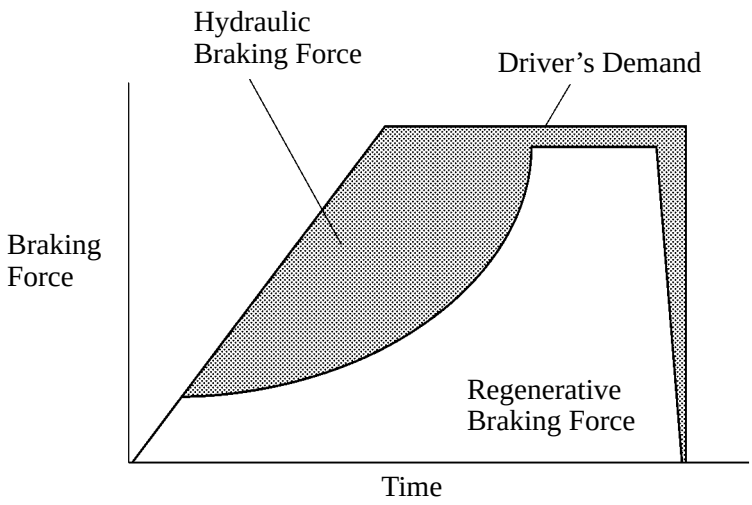

Changes in Braking Force Apportionment

02HCH04Y

Downloaded from www.Manualslib.com manuals search engine

Outline of Power Steering Cooperative Control Function

1) General

- The VDIM effects coordinated control consisting of the ECB (Electronically Controlled Brake System) and EPS. By integrating these preventive safety functions, the VDIM ensures excellent driving stability and maneuverability of the vehicle.
- The VDIM coordinates the EPS and ECB (Electronically Controlled Brake System) to perform braking control on split friction roads and front and rear wheel skid tendency controls.
- If the vehicle loses stability due to wheel slippage, this function effects brake control by applying brake pressure to the wheels. At the same time, the EPS provides steering torque assist control to facilitate the driver's steering maneuver.

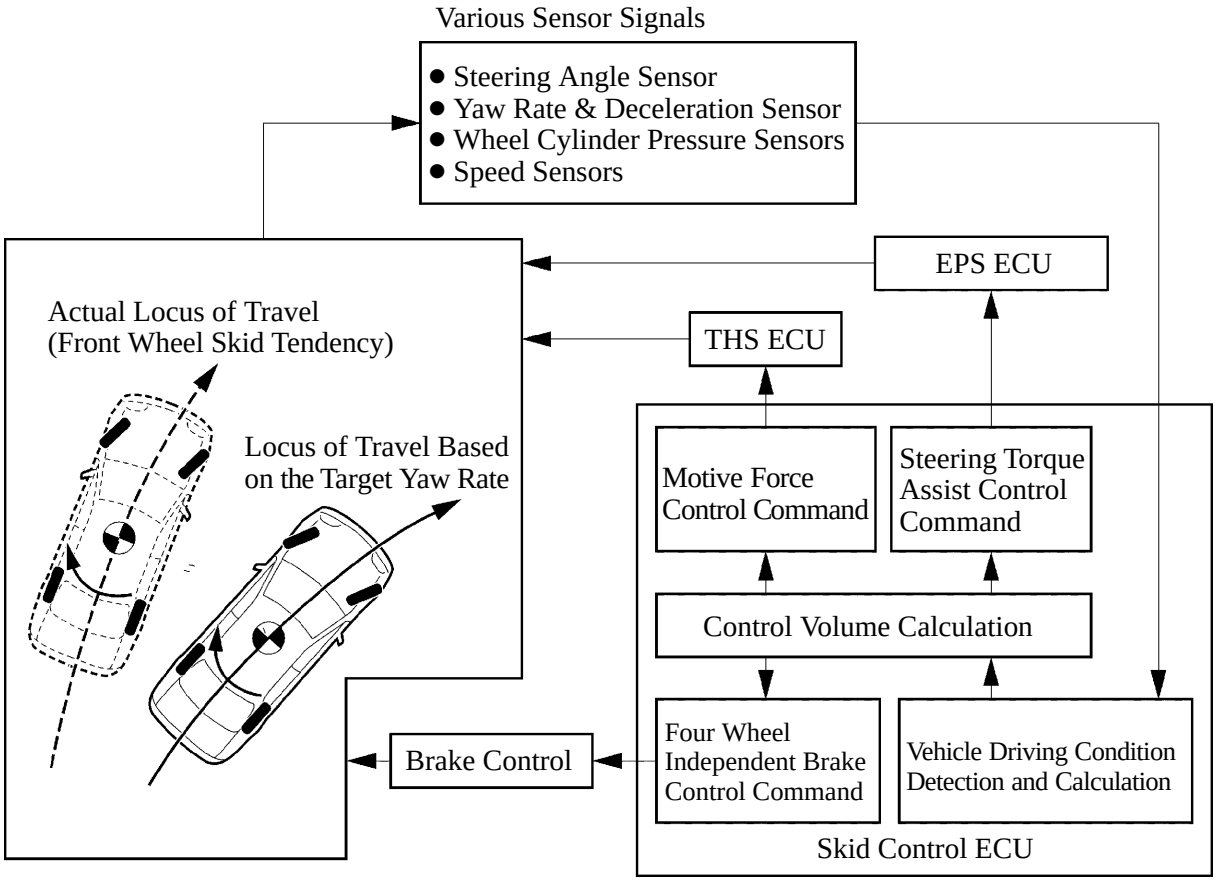

0140CH127C

Downloaded from www.Manualslib.com manuals search engine

2) Operation in Braking on Split Friction Roads

When braking on a split friction road, the vehicle tends to deflect toward the higher friction side due to the difference between the braking forces on the left and right sides. In the VDIM, the EPS ECU receives command signals from the skid control ECU. Based on these signals, the EPS ECU operates the motor for the EPS to reduce the effect of the difference between the braking forces on the left and right sides, assisting steering operation. This enables the driver to operate the steering wheel to make steering corrections easily.

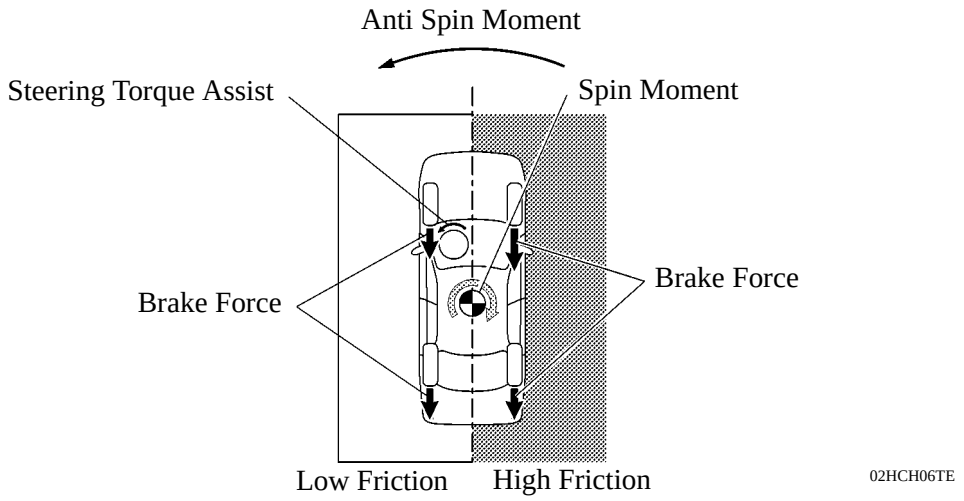

3) Operation in Accelerating on Split Friction Roads

When accelerating on a split friction road, the vehicle tends to deflect toward lower friction side due to the drive torque difference between the left and right sides. In the VDIM, the skid control ECU performs braking control of the drive wheel on the low friction side (TRAC function) and transmits command signals to the EPS ECU. Based on these signals, the EPS ECU operates the motor for the EPS to reduce the effect of the motive force difference between the left and right sides, assisting steering operation. As a result, the proper motive force and vehicle stability have been ensured.

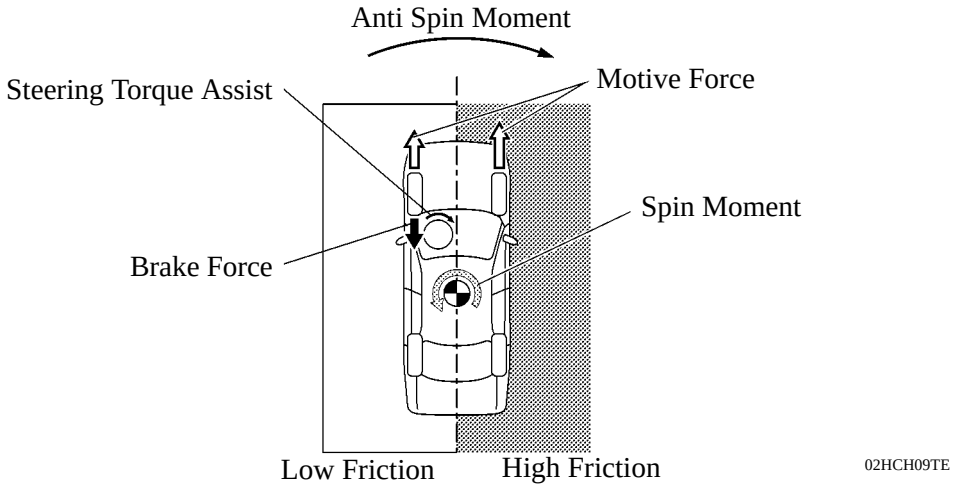

Downloaded from www.Manualslib.com manuals search engine

4) Operation in Front Wheel Skid Tendency Control

- When front wheel skidding is detected, motive force is limited and braking control is performed based on the amount of front wheel skid tendency. Accordingly, a moment of force is generated in the vehicle turning direction to limit front wheel skid tendency. (VSC function)
- In the case of a front wheel skid tendency, the steering torque will be light as a signal to the driver.
- With the VDIM, if the driver turns the steering wheel excessively, the EPS ECU will receive command signals from the skid control ECU. Based on these signals, the EPS ECU will operate to reduce the steering assist. This prevents the driver from increasing the front wheel skid tendency.

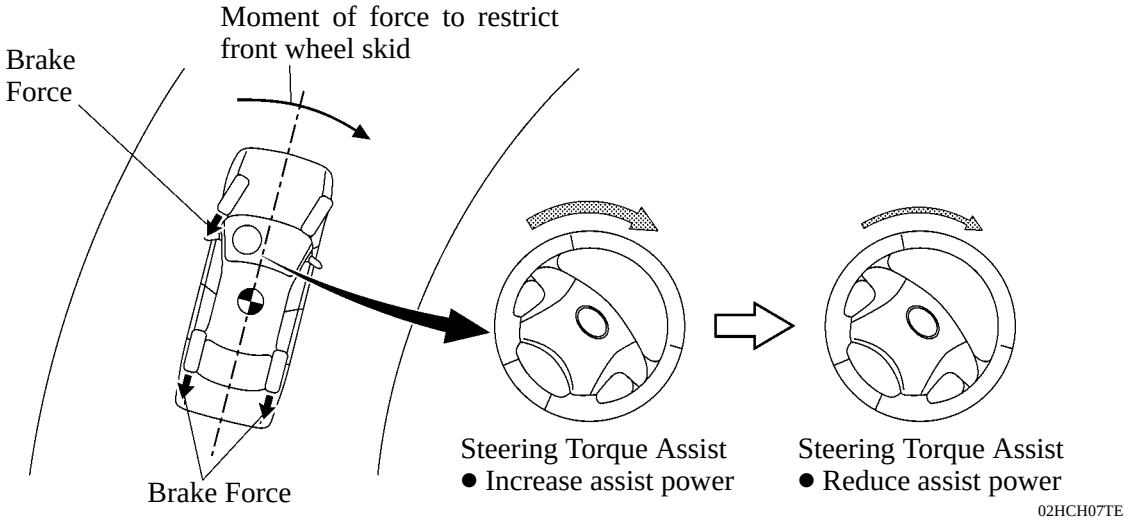

5) Operation in Rear Wheel Skid Tendency Control

- When rear wheel skidding is detected, motive force is limited and braking control is performed based on the amount of rear wheel skid tendency. Accordingly, an anti-spin moment is generated to limit the rear wheel skid tendency. (VSC function)
- With the VDIM, the EPS ECU receives command signals from the skid control ECU. Based on these signals, the EPS ECU operates the motor for the electric power steering to provide steering assist to help the driver compensate for the rear wheel skid tendency. This enables the driver to operate the steering wheel easily.

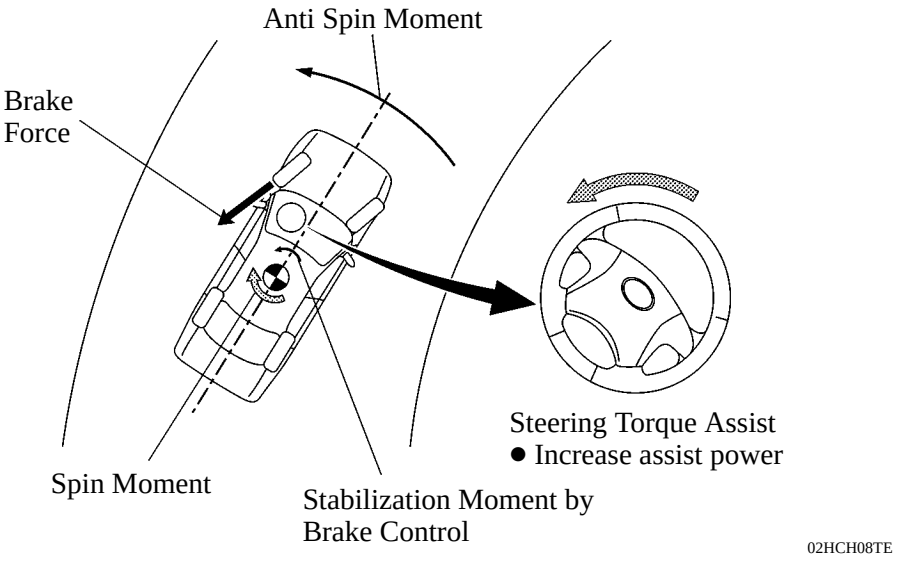

Downloaded from www.Manualslib.com manuals search engine

3. ECB (Electronically Controlled Brake System)

General

- In this system, the conventional brake booster portion has been discontinued. Instead, it consists of brake input, power supply, and hydraulic pressure control portions.
- During normal braking, the fluid pressure generated by the master cylinder does not directly actuate the wheel cylinders, but serves as a hydraulic pressure signal. Instead, the actual control pressure is obtained by regulating the fluid pressure of the hydraulic power source in the brake actuator, which actuates the wheel cylinders.
- The ECB (Electronically Controlled Brake System) executes the hydraulic control of the ABS with EBD, brake assist, TRAC, and VSC function in accordance with information provided by the sensors and ECUs.
- The power source backup unit is used as an auxiliary power source, to supply power to the brake system in a stable manner.

▶ Outline of ECB (Electronically Controlled Brake System) ◀

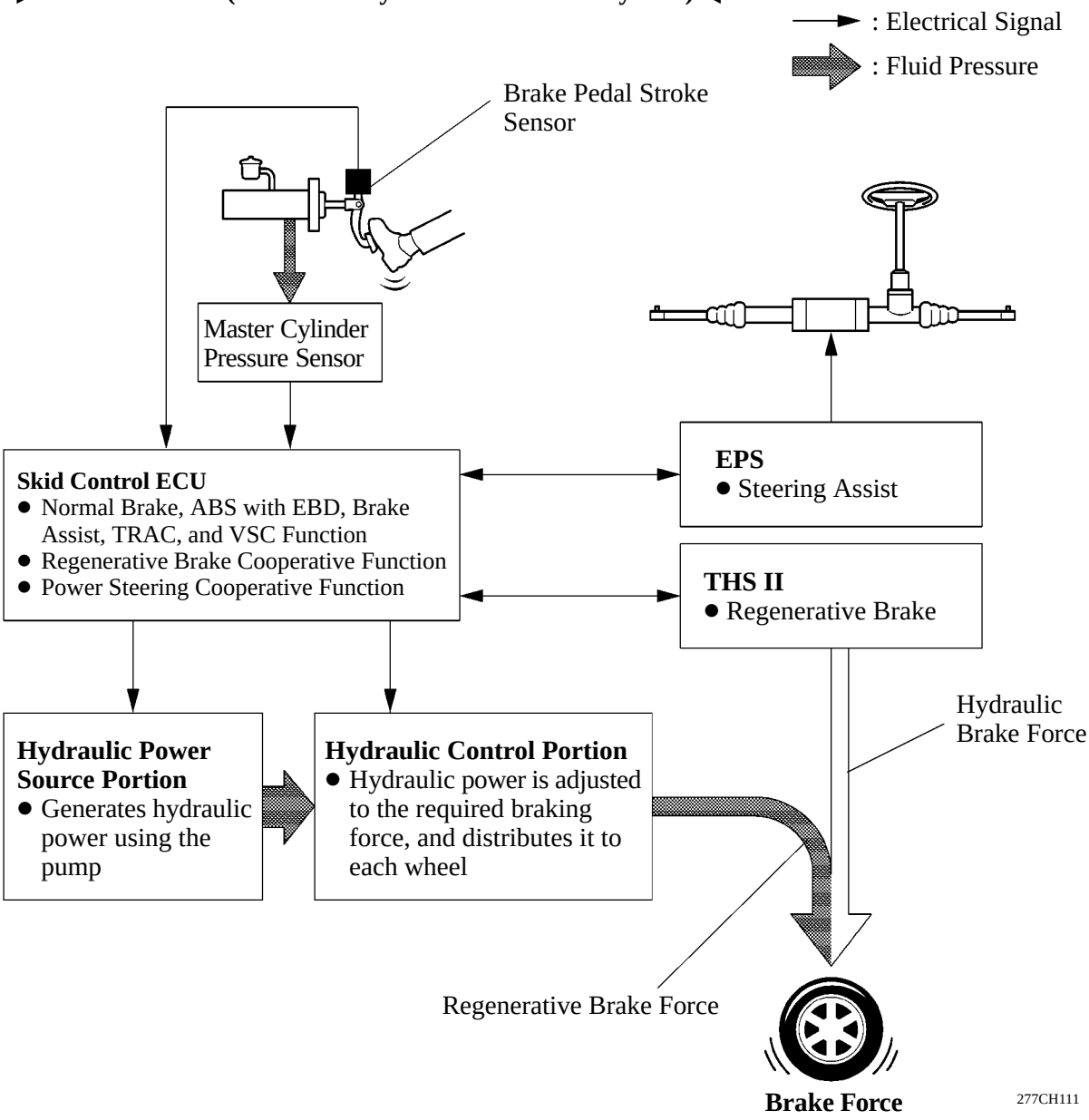

Downloaded from www.Manualslib.com manuals search engine

Outline of EBD Control Function

1) General

The distribution of the brake force, which was performed mechanically in the past, is now performed under electrical control of the skid control ECU, which precisely controls the braking force in accordance with the vehicle's driving conditions.

2) Front/Rear Wheels Brake Force Distribution

If the brakes are applied while the vehicle is moving straight forward, the transfer of the road reduces the load that is applied to the rear wheels. The skid control ECU determines this condition by way of the signals from the speed sensors, and the brake actuator regulates the distribution of the brake force of the rear wheels to optimally control.
For example, the amount of the brake force that is applied to the rear wheels during braking varies whether or not the vehicle is carrying a load. The amount of the brake force that is applied to the rear wheels also varies in accordance with the extent of the deceleration.
Thus, the distribution of the brake force to the rear is optimally controlled in order to effectively utilize the braking force of the rear wheels under these conditions.

▶ EBD Control Concept ◀

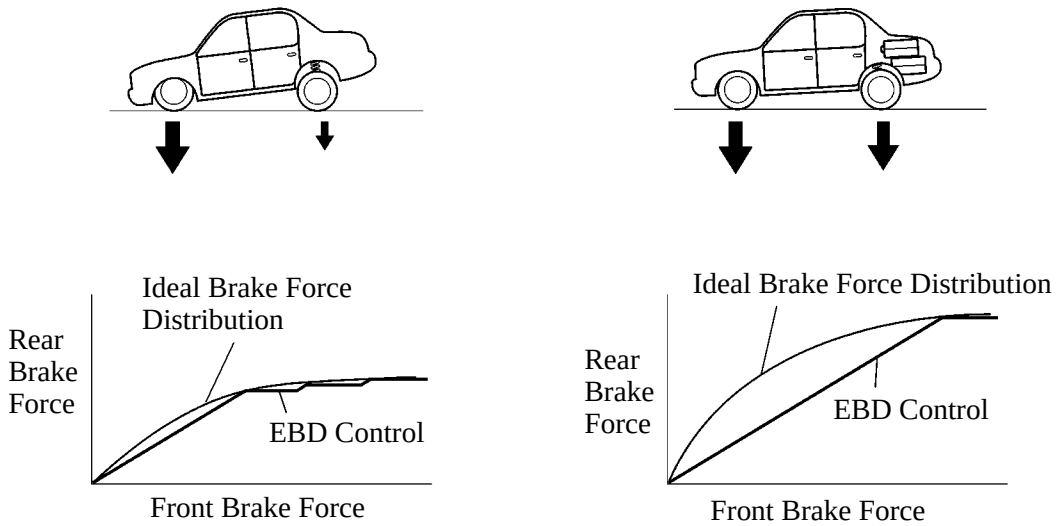

Without Load in Rear **With Load in Rear**

182CH56

3) Right/Left Wheels Brake Force Distribution (During Cornering Braking)

When the brakes are applied while the vehicle is cornering, the load that applied to the inner wheel decreases and the outer wheel increases.
The skid control ECU determines this condition by way of the signals from the speed sensors, and the brake actuator regulates the brake force in order to optimally control the distribution of the brake force to the inner wheel and outer wheel.

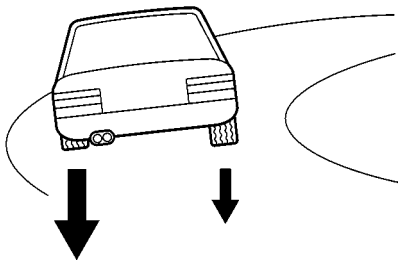

181CH56

Downloaded from www.Manualslib.com manuals search engine

Outline of Brake Assist Function

The brake assist function interprets a quick push of the brake pedal as emergency braking and supplements the braking power applied if the driver has not stepped hard enough on the brake pedal. In emergencies, drivers, especially inexperienced ones, often panic and do not apply sufficient pressure on the brake pedal. Based on the signals from the master cylinder pressure sensors and the brake pedal stroke sensor, the skid control ECU calculates the speed and the amount of the brake pedal application and then determines the intention of the driver to make an emergency braking. If the skid control ECU determines that the driver intends emergency braking, the function activates the brake actuator to increase the brake fluid pressure. The brake assist function in combination with ABS helps ensure the vehicle's brake performance.
A key feature of Brake Assist function is that the timing and the degree of braking assistance are designed to ensure that the driver does not discern anything unusual about the braking operation. When the driver intentionally eases up on the brake pedal, the function reduces the amount of assistance it provides.

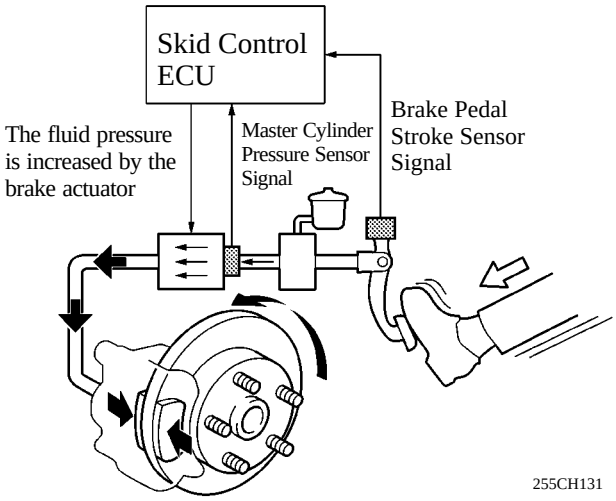

with Brake Assist Function

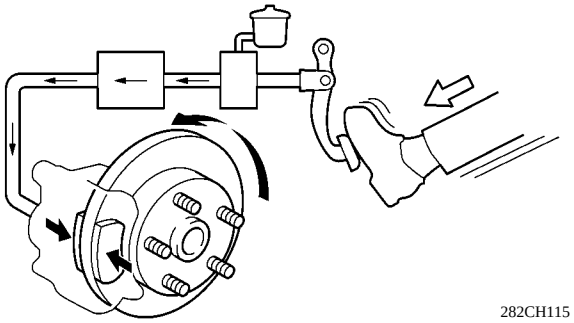

without Brake Assist Function

◆: There is no difference of the maximum brake performance between the vehicles with and without brake assist function.

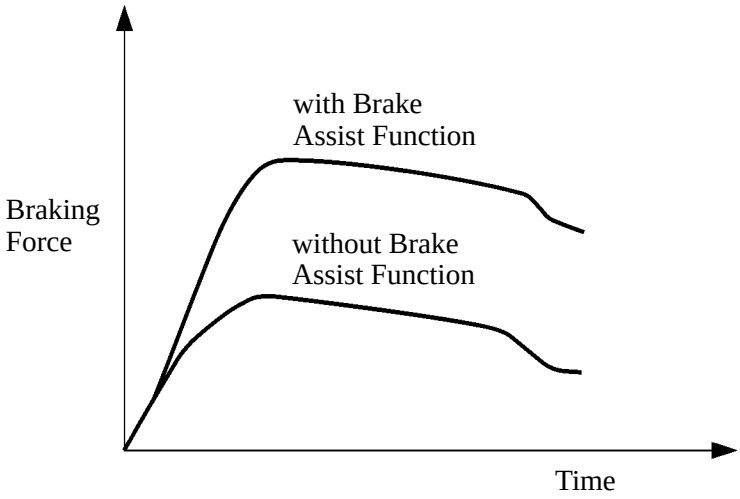

Downloaded from www.Manualslib.com manuals search engine

Outline of TRAC Function

- If the driver presses the accelerator pedal aggressively when starting off or accelerating on a slippery surface, the drive wheel could slip due to the excessive amount of torque that is generated. The adjustment of the motive force and the control of the hydraulic brakes of the drive wheels accomplished by THS II allow the TRAC function to help minimize the slippage of the drive wheels, and generate the drive force that is appropriate for the road surface conditions.
- For example, a comparison may be made between two vehicles, one with the TRAC function and the other without. If the driver of each vehicle operates the accelerator pedal in a rough manner while driving over a surface with different surface friction characteristics, the drive wheel on the slippery surface could slip as illustrated. As a result, the vehicle could become unstable.
  However, when the vehicle is equipped with the TRAC function, the skid control ECU instantly determines the state of the vehicle and operates the brake actuator in order to apply the brake of the slipping drive wheel. Simultaneously, the skid control ECU effects cooperative control with the THS ECU, in order to adjust the motive force. Thus, this function can constantly maintain a stable vehicle posture.

▶ Driving condition on road with different surface friction characteristics ◀

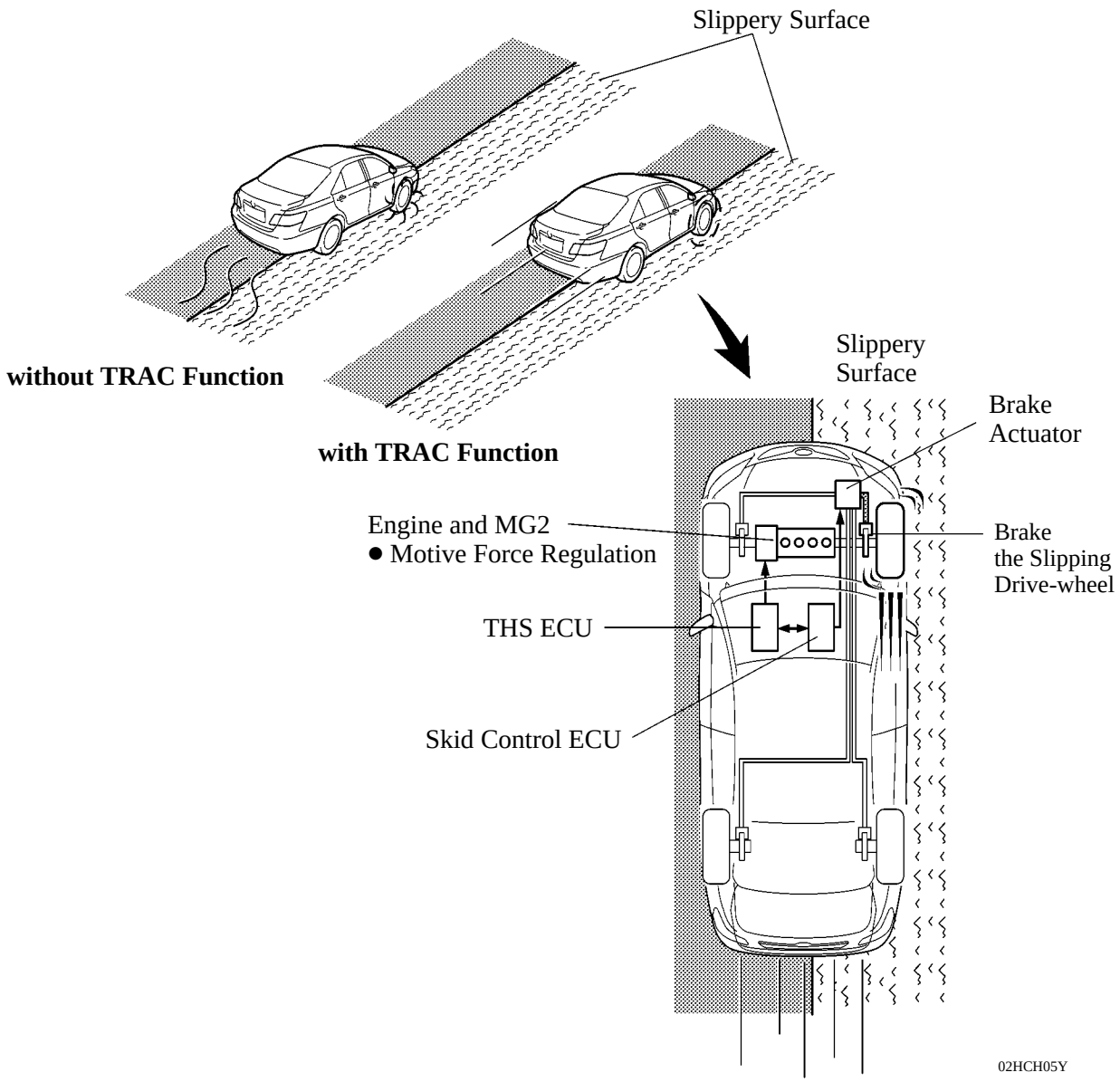

Downloaded from www.Manualslib.com manuals search engine

Outline of VSC Function

1) General

The followings are two examples that can be considered as circumstances in which the tires exceed their lateral grip limit.
The VSC function is designed to help control the vehicle behavior by controlling the motive force and the brakes at each wheel when the vehicle is under one of the conditions indicated below.

- When the front wheels lose grip in relation to the rear wheels (front wheel skid tendency).
- When the rear wheels lose grip in relation to the front wheels (rear wheel skid tendency).

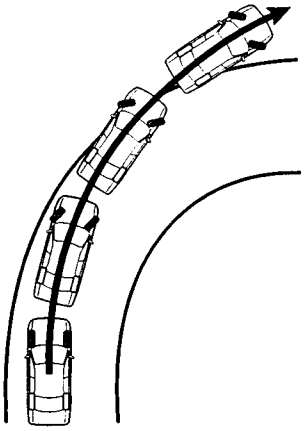

Front Wheel Skid Tendency

151CH17

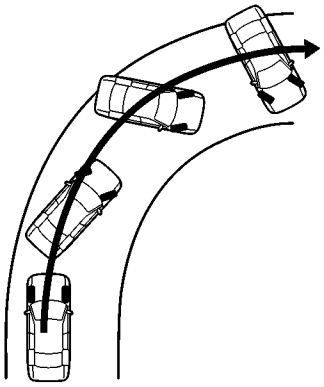

Rear Wheel Skid Tendency

189CH100

2) Method for Determining the Vehicle Condition

To determine the condition of the vehicle, sensors detect the steering angle, vehicle speed, vehicle's yaw rate, and the vehicle's lateral acceleration, which are then calculated by the skid control ECU.

a. Determining Front Wheel Skid

Whether or not the vehicle is in the state of front wheel skid is determined by the difference between the target yaw rate and the vehicle's actual yaw rate.
When the vehicle's actual yaw rate is smaller than the yaw rate (a target yaw rate that is determined by the vehicle speed and steering angle) that should be rightfully generated when the driver operates the steering wheel, it means the vehicle is making a turn at a greater angle than the locus of travel.
Thus, the skid control ECU determines that there is a large tendency to front wheel skid.

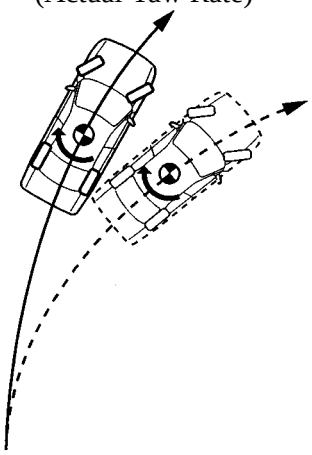

151CH19

Downloaded from www.Manualslib.com manuals search engine

b. Determining Rear Wheel Skid

Whether or not the vehicle is in the state of rear wheel skid is determined by the values of the vehicle's slip angle and the vehicle's slip angular velocity (time-dependent changes in the vehicle's slip angle). When the vehicle's slip angle is large, and the slip angular velocity is also large, the skid control ECU determines that the vehicle has a large rear wheel skid tendency.

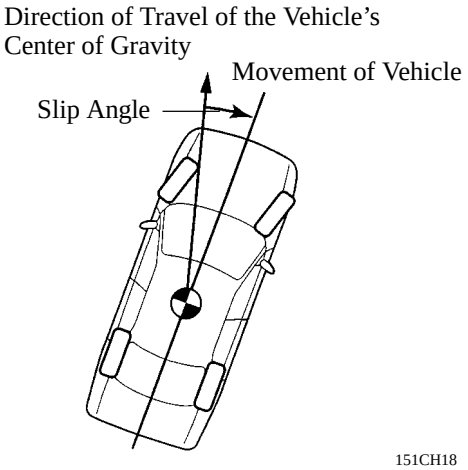

3) Method for VSC Operation

When the skid control ECU determines that the vehicle exhibits a tendency to front wheel skid or rear wheel skid, it decreases the motive force and applies the brake of a front or rear wheel to control the vehicle's yaw moment.
The basic operation of the VSC is described below. However, the control method differs depending on the vehicle's characteristics and driving conditions.

a. Dampening a Front Wheel Skid

When the skid control ECU determines that there is a large front wheel skid tendency, it counteracts in accordance with the extent of that tendency. The skid control ECU controls the motive power output and applies the brakes of the front wheel of the outer circle in the turns and rear wheels in order to restrain the front wheel skid tendency.

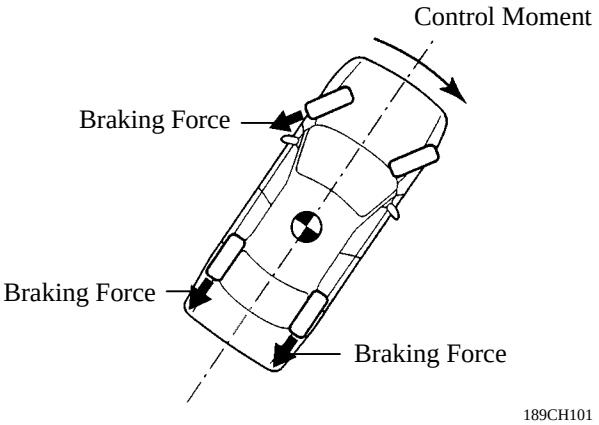

Making a Right Turn

b. Dampening a Rear Wheel Skid

When the skid control ECU determines that there is a large rear wheel skid tendency, it counteracts in accordance with the extent of that tendency. It applies the brakes of the front wheel of the outer circle of the turn, and generates an outward moment of inertia in the vehicle, in order to restrain the rear wheel skid tendency. Along with the reduction in the vehicle speed caused by the braking force, the excellent vehicle's stability is ensured.
In some cases, the skid control ECU applies the brake of the rear wheels, as necessary.

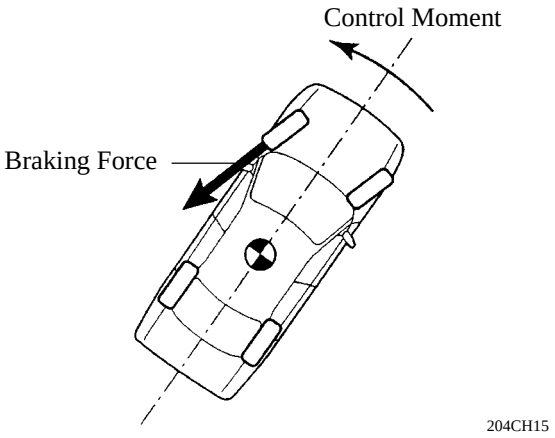

Making a Right Turn

Downloaded from www.Manualslib.com manuals search engine

System Diagram

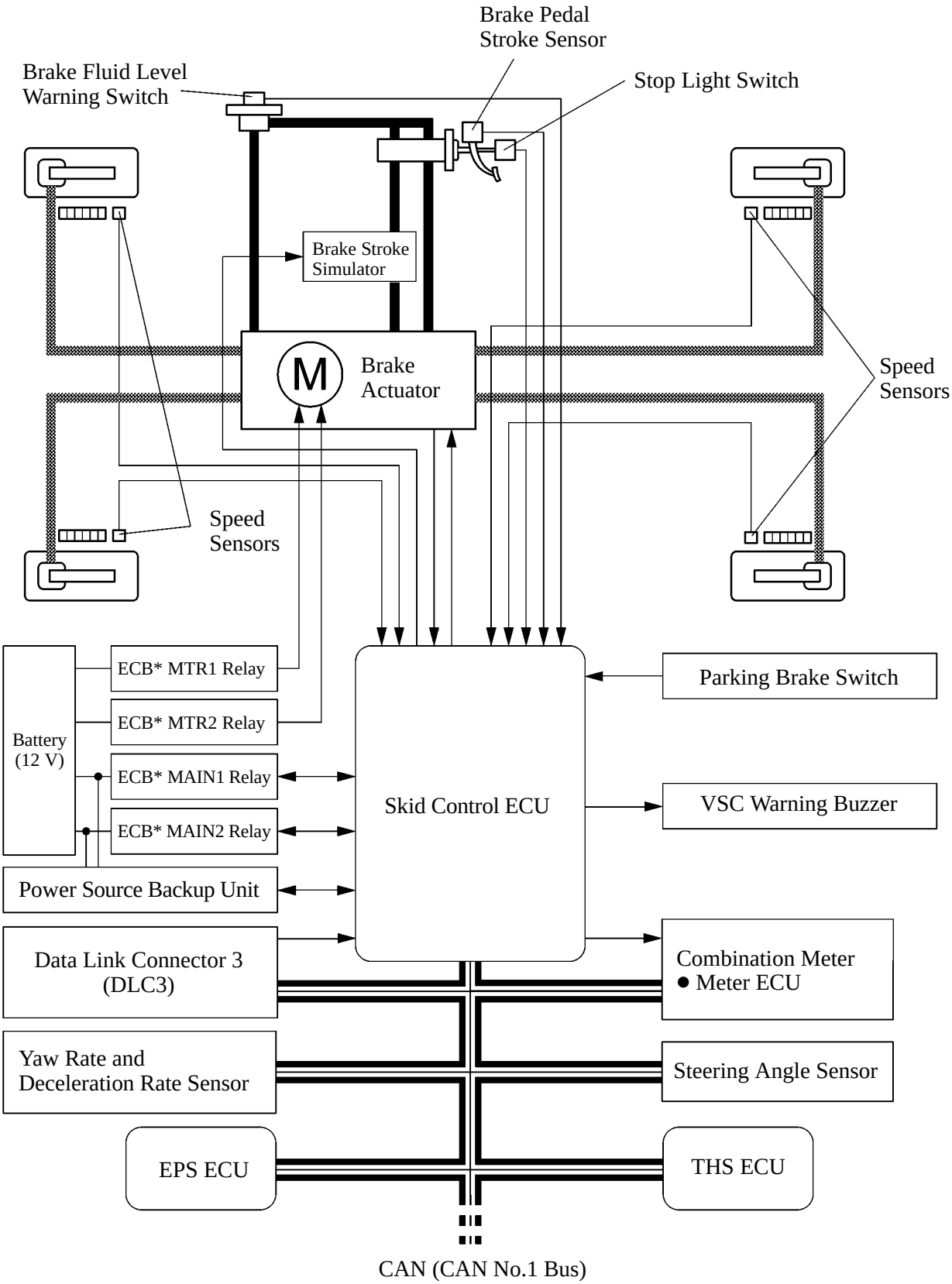

02HCH10Y

*: ECB (Electronically Controlled Brake System)

Downloaded from www.Manualslib.com manuals search engine

Construction

The configuration of the brake control system is as shown in the following chart.

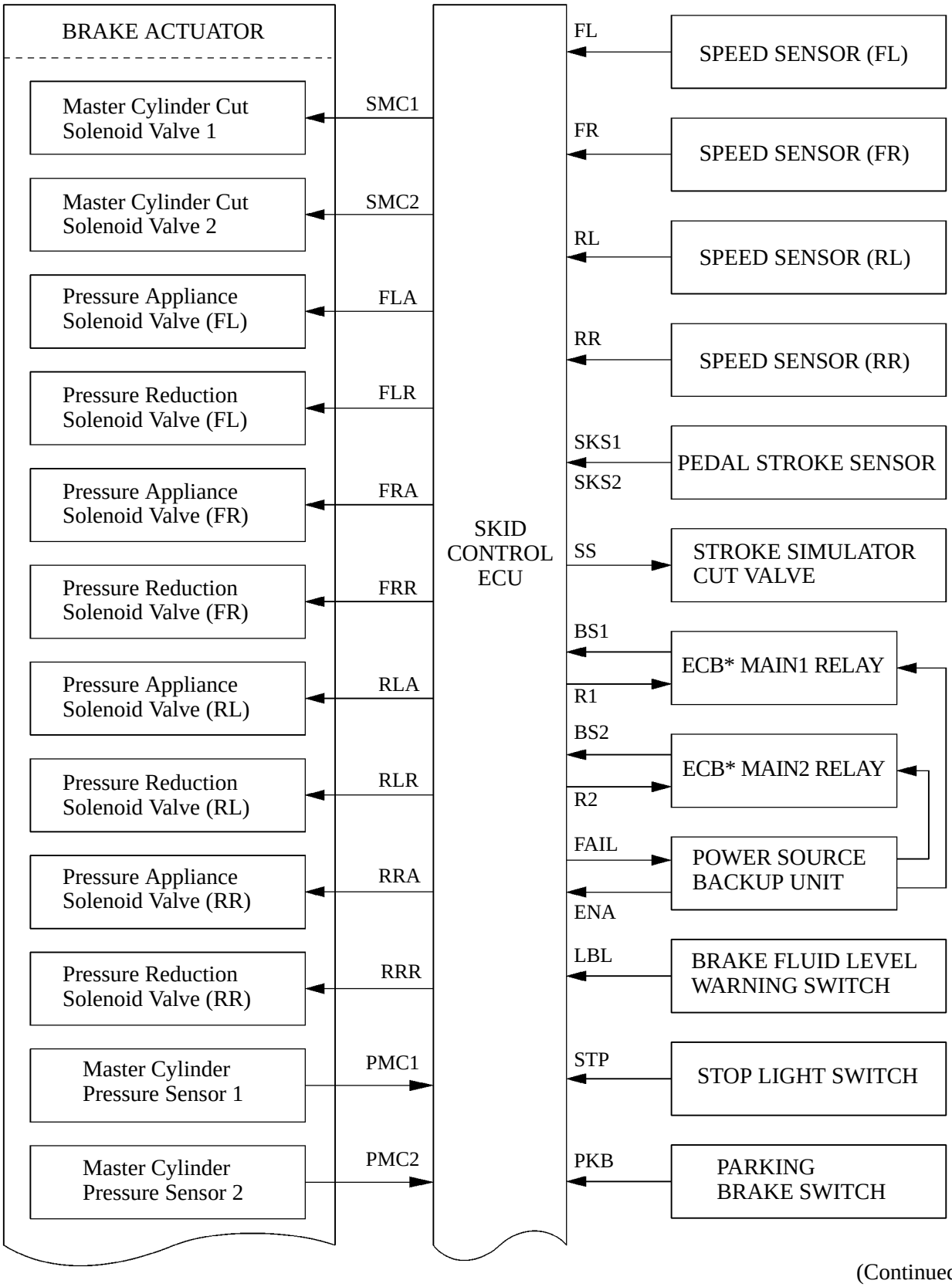

(Continued)

*: ECB (Electronically Controlled Brake System)

277CH117

Downloaded from www.Manualslib.com manuals search engine

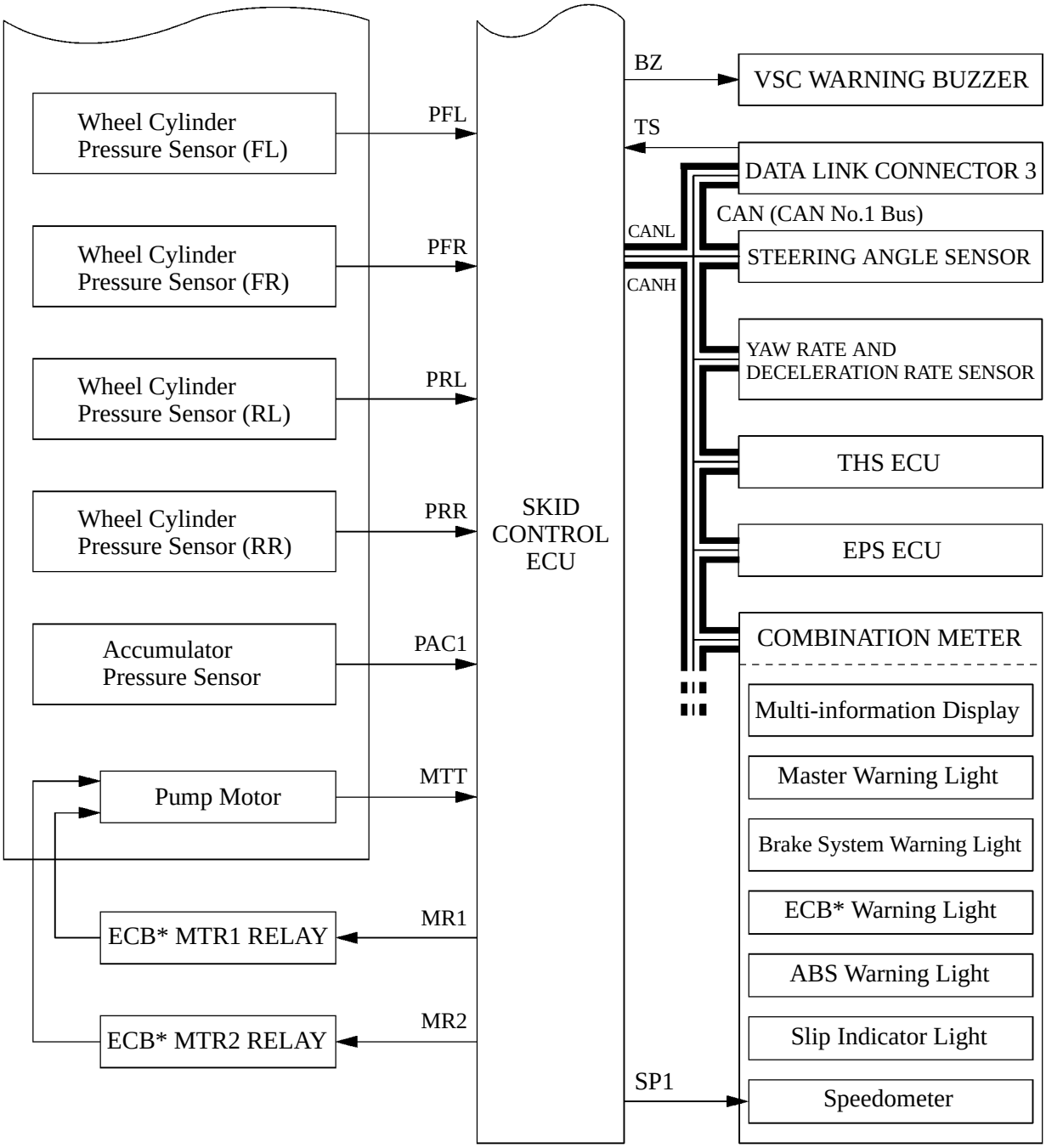

02HCH11Y

*: ECB (Electronically Controlled Brake System)

Downloaded from www.Manualslib.com manuals search engine

Layout of Main Components

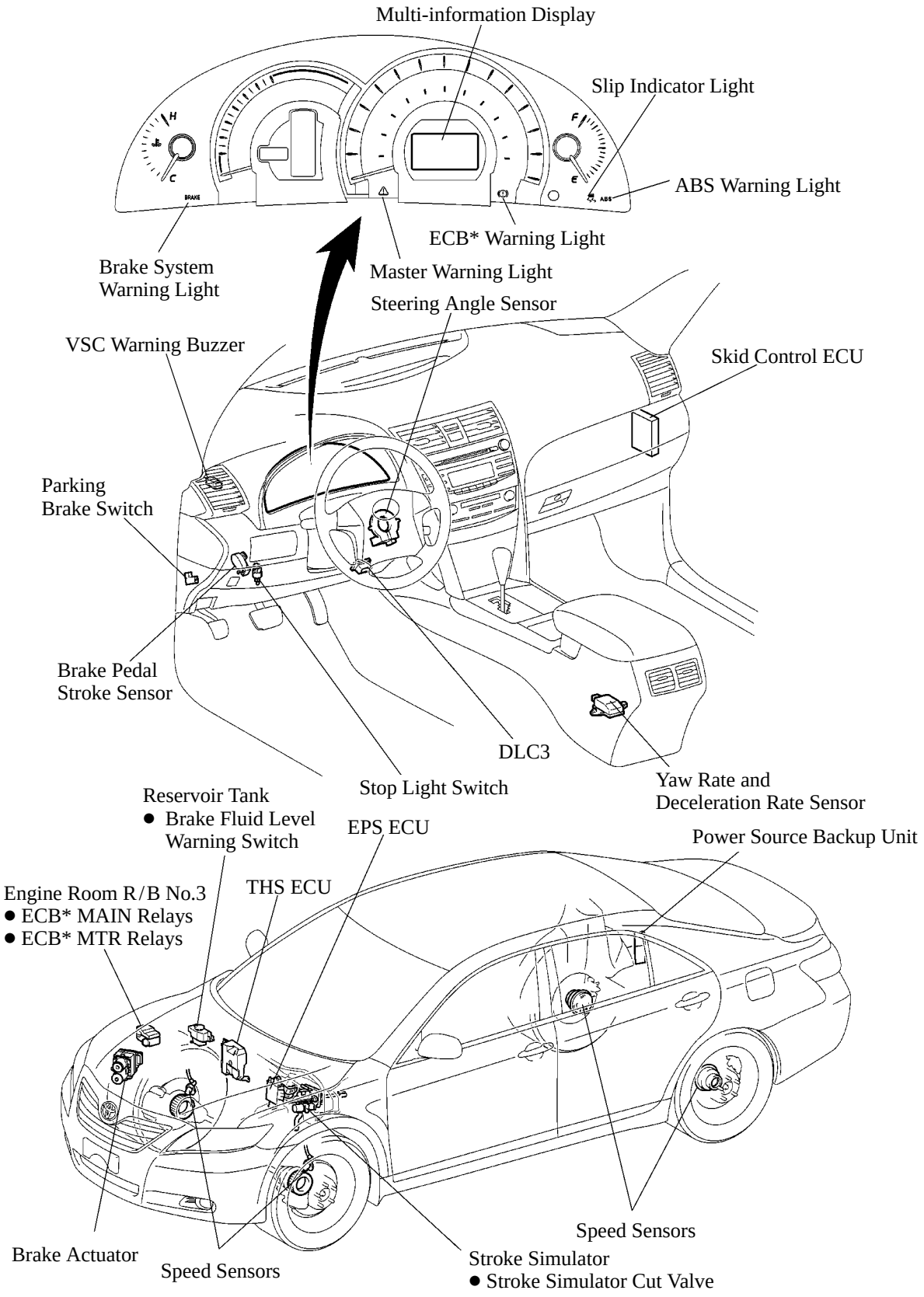

02HCH12TE

*: ECB (Electronically Controlled Brake System)

Downloaded from www.Manualslib.com manuals search engine

Function of Main Components

Component		Function
Brake Actuator (See Page CH-45)	Hydraulic Power Source Portion	● Consists of a pump, pump motor, accumulator, and relief valve, and generates and stores the hydraulic pressure, which the skid control ECU uses for controlling braking. ● The accumulator pressure sensor is installed in the brake actuator.
	Hydraulic Control Portion	● Consists of 2 master cylinder cut solenoid valves, 4 pressure appliance solenoid valves, and 4 pressure reduction solenoid valves. ● The 2 master cylinder cut solenoid valves, which are the two-position type, are controlled by the skid control ECU to open and close the passage between the master cylinder and the wheel cylinders. ● The 4 pressure appliance solenoid valves and the 4 pressure reduction solenoid valves are the linear type. They are controlled by the skid control ECU to increase and decrease the fluid pressure in the wheel cylinders. ● The master cylinder pressure sensors and the wheel cylinder pressure sensors are installed in the brake actuator.
Skid Control ECU		Monitors the driving conditions of the vehicle in accordance with the signals received from the sensors and through cooperative control with the THS ECU and EPS ECU, calculates the required amount of braking force, and controls the brake actuator.
Brake Master Cylinder		● Generates hydraulic pressure in accordance with the amount of effort applied to the brake pedal by the driver. ● When a malfunction occurs in the power supply portion, the brake master cylinder supplies the fluid pressure (which is generated by the brake pedal effort) directly to the wheel cylinders.
Brake Pedal Stroke Sensor (See Page CH-50)		Directly detects the extent of the brake pedal stroke operated by the driver.
Stroke Simulator (See Page CH-51)		Generates a pedal stroke during braking in accordance with the driver's pedal effort.
	Stroke Simulator Cut Valve	Allows the fluid pressure generated by the master cylinder to flow into the stroke simulator while the ECB* operates.
Combination Meter	Multi-information Display and Master Warning Light	Informs the driver of a failure in the VSC function by displaying a message on the multi-information display in the combination meter and blinking the master warning light.
	ABS Warning Light	Lights up to alert the driver that the skid control ECU detects the malfunction in the ABS, EBD, or Brake Assist function.
	Slip Indicator Light	Blinks to inform the driver that the ABS function, the VSC function or the TRAC function is operated.
	ECB* Warning Light	Lights up to alert the driver that a minor malfunction occurs in the brake system, which does not affect the braking force (such as a malfunction in the regenerative brake).
	Brake System Warning Light	● Lights up to alert the driver that the skid control ECU detects the malfunction in the apportioning of the brake. ● Lights up to inform the driver that the parking brake is ON or the brake fluid level is low.

*: ECB (Electronically Controlled Brake System)

(Continued)

Downloaded from www.Manualslib.com manuals search engine

Component		Function
VSC Warning Buzzer		● Sounds continuously to inform the driver that there is a malfunction in the hydraulic pressure or a failure in the power supply. ● Sounds intermittently to inform the driver of the vehicle skidding.
THS ECU		● Actuates the regenerative brake on receiving a signal from the skid control ECU. ● Sends the actual regenerative brake control value to the skid control ECU. ● Controls the motive force based on an output control request signal received from the skid control ECU while the VSC function or TRAC function is operating.
Reservoir Tank		Stores the brake fluid.
	Brake Fluid Level Warning Switch	Detects the low brake fluid level.
Stop Light Switch		Detects the brake pedal-depressing signal.
Yaw Rate and Deceleration Rate Sensor (See Page CH-51)		● Detects the vehicle's yaw rate. ● Detects the vehicle's acceleration in the forward, rearward, and lateral.
Steering Angle Sensor (See Page CH-52)		Detects the steering direction and angle of the steering wheel.
Speed Sensor		Detects the wheel speed of each of 4 wheels.
ECB* MTR Relays		● Two types of pump motor relays with different pump actuation speeds. ● If one relay fails, the other relay operates to actuate the pump.
ECB* MAIN Relays		Controlled by the skid control ECU, and supply or stop power to the solenoid valves in the brake actuator and the skid control ECU.
Power Source Backup Unit (See Page CH-52)		● An auxiliary power supply to provide stable power to the brake system. ● Complements the supply of power to the brake system by discharging the electric charge that is stored in the unit when the voltage of the (12 V) power supply of the vehicle is low.

*: ECB (Electronically Controlled Brake System)

Downloaded from www.Manualslib.com manuals search engine

Construction and Operation of Main Components

1) Brake Actuator

a. General

- The brake actuator consists of hydraulic control and hydraulic power source portions.
- The two master cylinder pressure sensors, four wheel cylinder pressure sensors, and an accumulator pressure sensor are installed in the brake actuator.

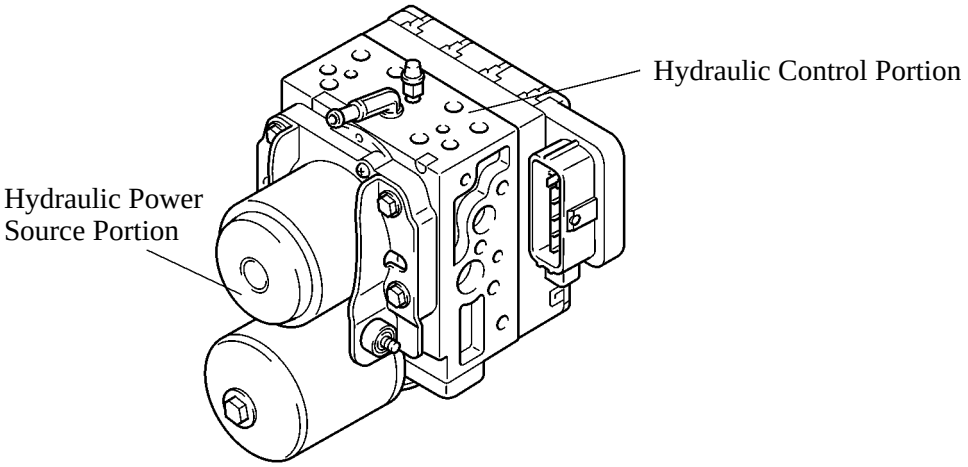

02HCH13Y

▶ Function of Main Components ◀

Component	Function
Master Cylinder Cut Solenoid Valve (2-position Type)	● When the brake system is started, this valve cuts the hydraulic passage between the master cylinder and the wheel cylinder. ● When the brake system is stopped or a failure occurs in the hydraulic power source portion, the valve opens to maintain the hydraulic passage to the front wheel cylinders and ensure braking. However, a greater effort than normal is required to press the brake pedal.
Pressure Appliance Solenoid Valve (Linear Type)	This valve, which is controlled by the skid control ECU, regulates the fluid pressure from the accumulator in order to amplify the fluid pressure to the wheel cylinder.
Pressure Reduction Solenoid Valve (Linear Type)	This valve, which is controlled by the skid control ECU, regulates the fluid pressure in order to reduce the fluid pressure to the wheel cylinder.
Master Cylinder Pressure Sensors	The master cylinder pressure sensor converts the fluid pressure generated by the master cylinder into electrical signals and transmits them to the skid control ECU. Accordingly, the skid control ECU determines the braking force required by the driver.
Wheel Cylinder Pressure Sensors	These sensors detect the fluid pressure that acts on the respective wheel cylinders and transmits them to the skid control ECU in the form of feedback. Accordingly, the skid control ECU monitors the fluid pressure of the wheel cylinders and controls the pressure appliance solenoid valve and the pressure reduction solenoid valve, in order to achieve the optimal wheel cylinder pressures.
Accumulator Pressure Sensor	The accumulator pressure sensor constantly detects the brake fluid pressure in the accumulator and transmits the signals to the skid control ECU. Accordingly, the skid control ECU controls the pump motor.
Pump and Pump Motor	Draws up the brake fluid from the reservoir tank and provides high hydraulic pressure to the accumulator.
Accumulator	Stores the hydraulic pressure that was generated by the pump. The accumulator is filled with high pressure nitrogen gas.
Relief Valve	Returns the brake fluid to the reservoir tank to prevent excessive pressure if the pump operates continuously due to a malfunction of the accumulator pressure sensor.

Downloaded from www.Manualslib.com manuals search engine

b. Hydraulic Control Portion

The 10 solenoid valves and 6-pressure sensors consists of the following:

- 2 master cylinder cut solenoid valves [(1), (2)]
- 4 pressure appliance valves [(3), (4), (5), (6)]
- 4 pressure reduction valves [(7), (8), (9), (10)]
- 2 master cylinder pressure sensors [(a), (b)]
- 4 wheel cylinder pressure sensors [(c), (d), (e), (f)]

▶ Hydraulic Circuit ◀

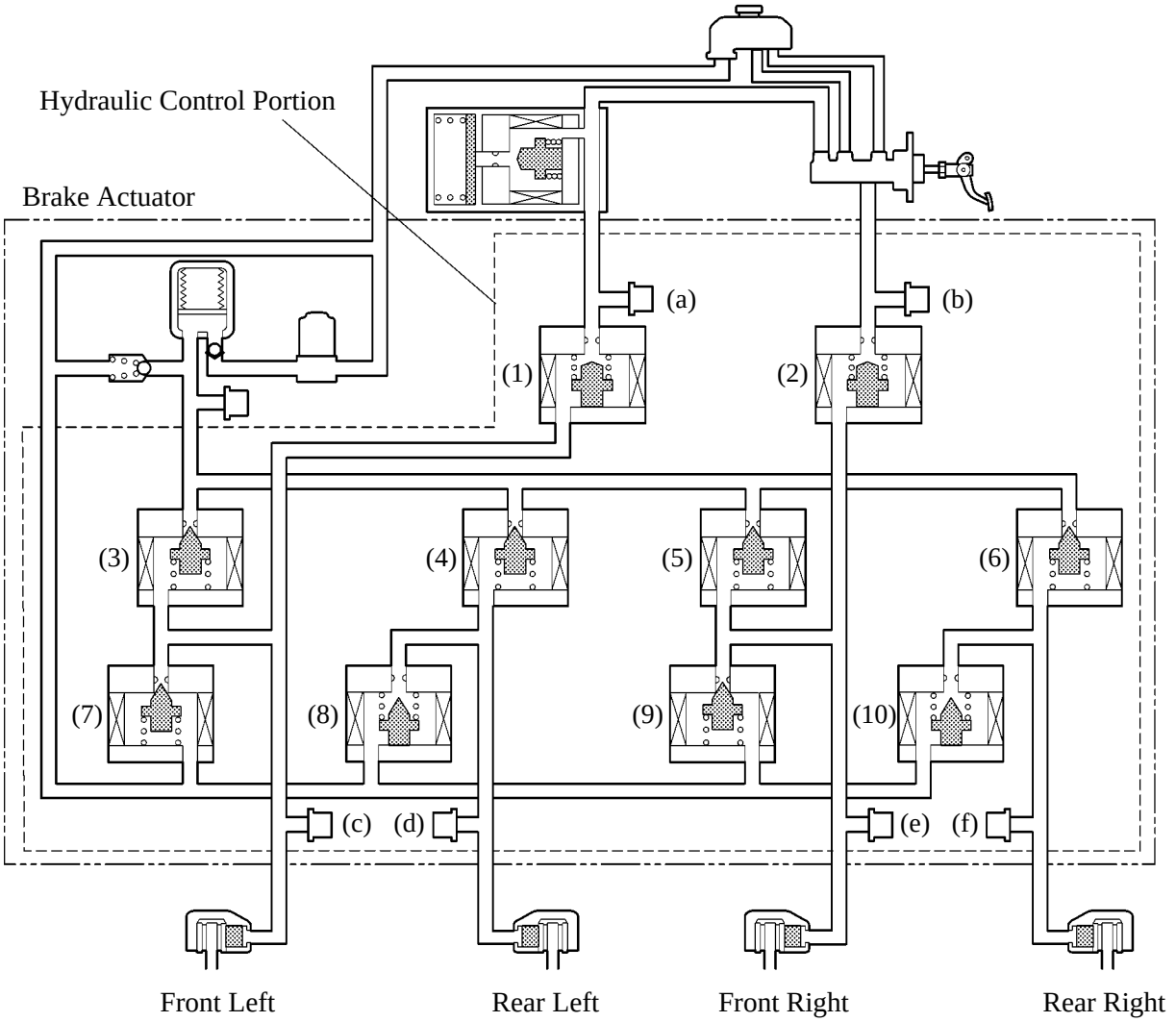

256CH107

Downloaded from www.Manualslib.com manuals search engine

c. Hydraulic Power Source Portion

i) General

The hydraulic power source portion consists of pump, pump motor, accumulator, relief valve, 2 motor relays, and accumulator pressure sensor.

ii) Accumulator

Inside the accumulator, the high-pressurized nitrogen gas is charged and sealed. In addition, metallic bellows-formed tube is used, in order to enhance the gastight performance of the accumulator.

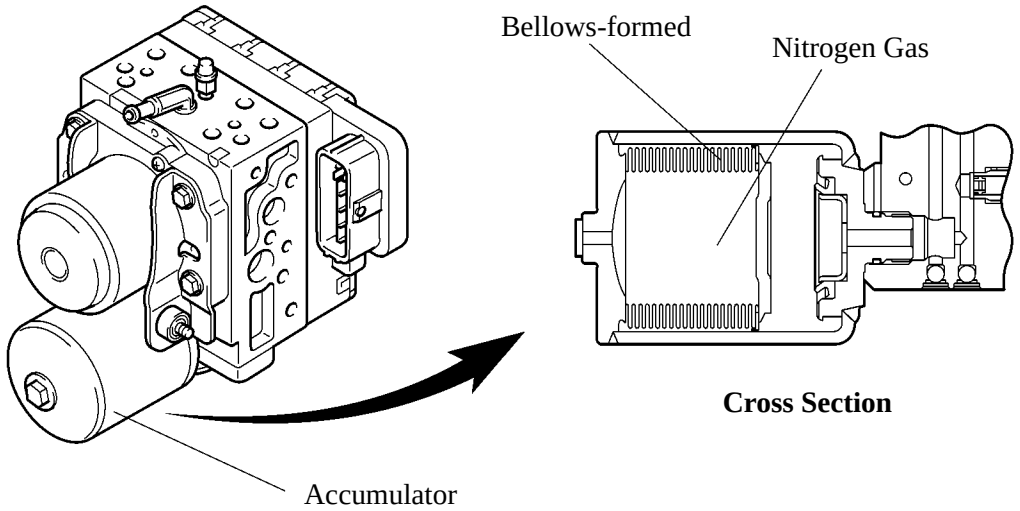

02HCH14Y

iii) Pump and Pump Motor

A plunger type pump is used. This pump is operated by the rotation of the camshaft driven by the motor, and then supplies high-pressurized fluid to the accumulator.

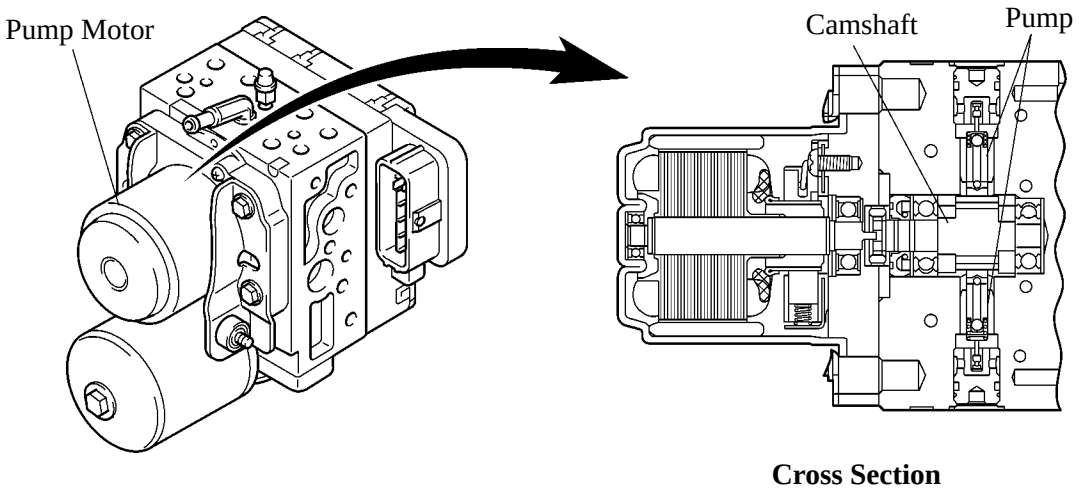

02HCH15Y

Downloaded from www.Manualslib.com manuals search engine

iv) Operation

- The brake fluid that is discharged by the pump passes through the check valve and is stored in the accumulator. The hydraulic pressure that is stored in the accumulator is used for providing the hydraulic pressure that is needed for normal braking and for operating the brake control.
- The motor relays consist of the following relays with different pump actuation speeds: relay 1 (low speed) and relay 2 (high speed). Normally, relay 1 with the slow pump speed is used. When the fluid pressure drops quickly because more fluid pressure is required, such as in ABS fluid pressure control, relay 2 with the fast pump speed is used. If one of the relays malfunctions, the other is used for actuating the pump.
- The accumulator pressure sensor constantly monitors the pressure in the accumulator and transmits it to the skid control ECU. If the accumulator pressure drops below the set pressure, the skid control ECU sends an activation signal to the motor relay in order to actuate the pump motor until the pressure in the accumulator reaches the set pressure.

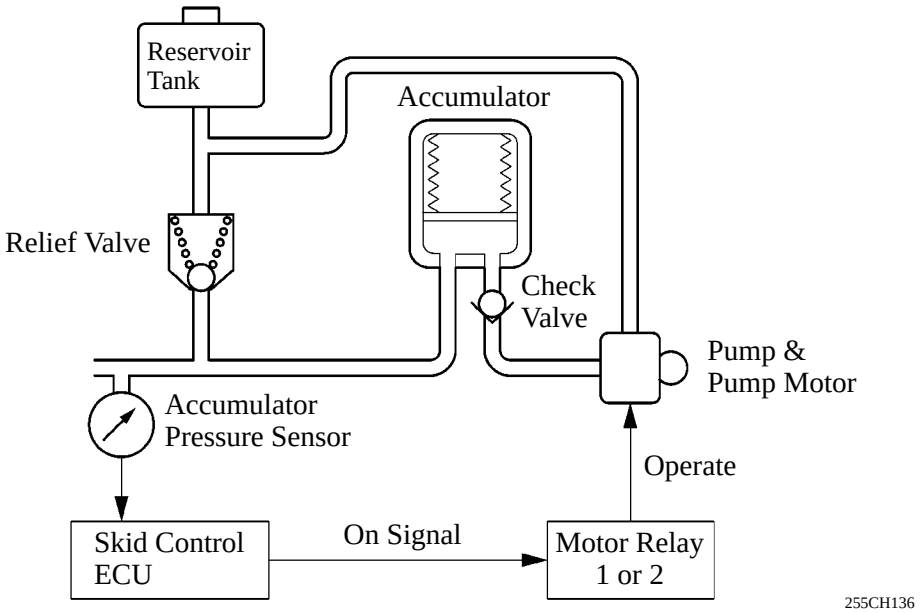

- If the pump and the pump motor continue to operate unintendedly, and the accumulator sensor failed, a high pressure would be created in the accumulator. At this time, the relief valve will open. To return the brake fluid to the reservoir tank, to reduce the accumulator pressure.

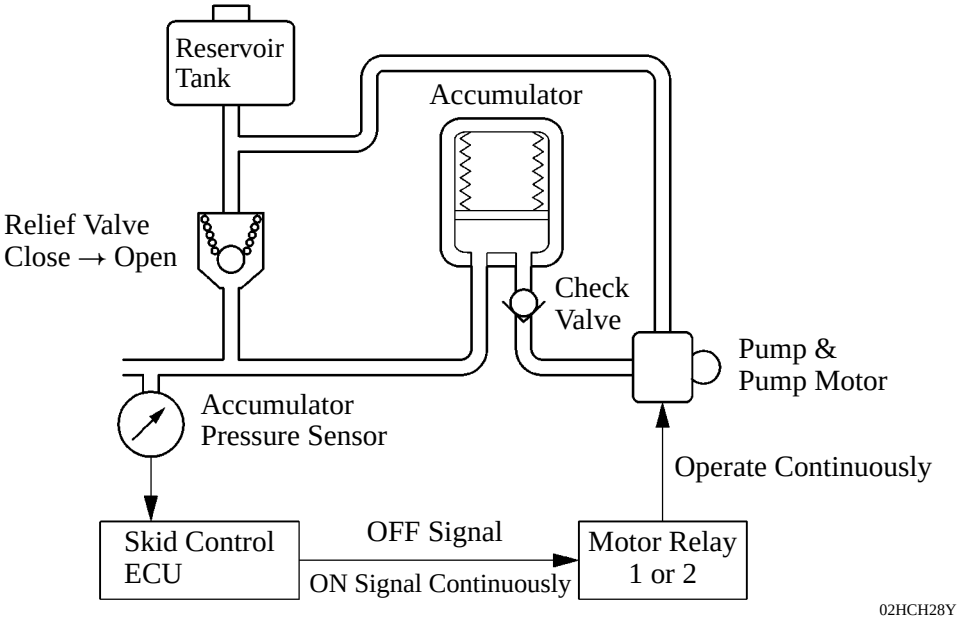

Downloaded from www.Manualslib.com manuals search engine

- If the accumulator pressure drops abnormally to a level below the pressure set at the ECU, the skid control ECU illuminates the brake system warning light, the ECB* warning light, ABS warning light and the master warning light. Then, a warning message appears on the multi-information display in the combination meter, and the VSC warning buzzer sounds to alert the driver of the abnormal hydraulic pressure.

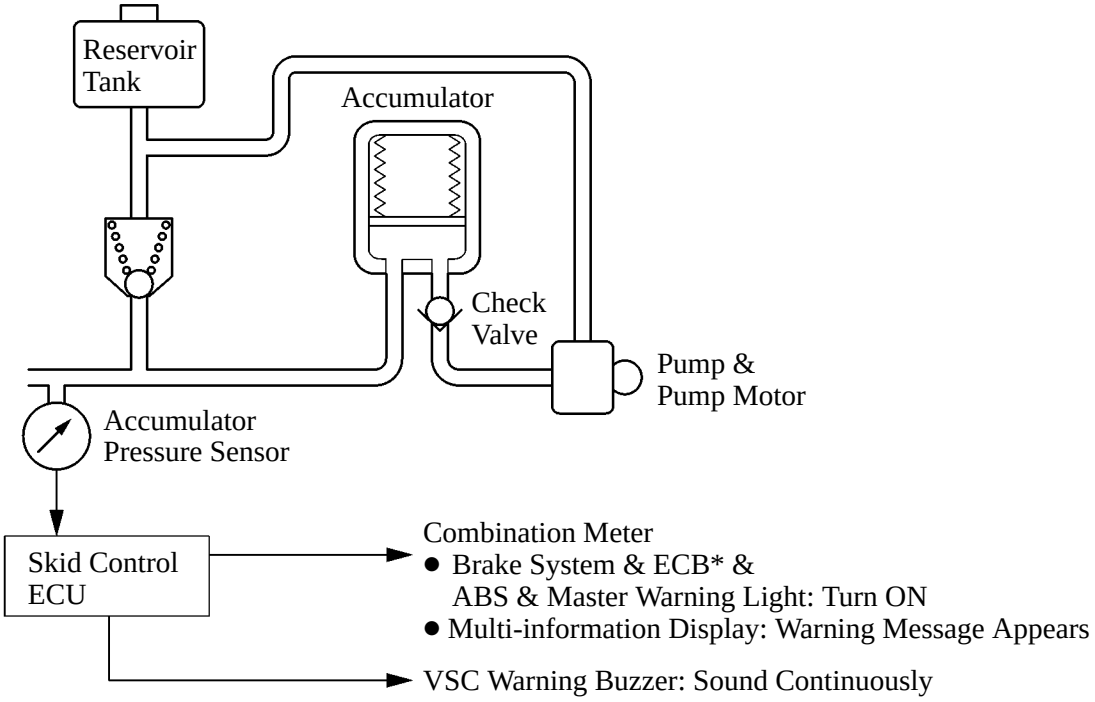

255CH138

*: ECB (Electronically Controlled Brake System)

Downloaded from www.Manualslib.com manuals search engine

2) Brake Pedal Stroke Sensor

This sensor, which contains a contact type variable resistor, detects the extent of the brake pedal stroke and transmits it to the skid control ECU.

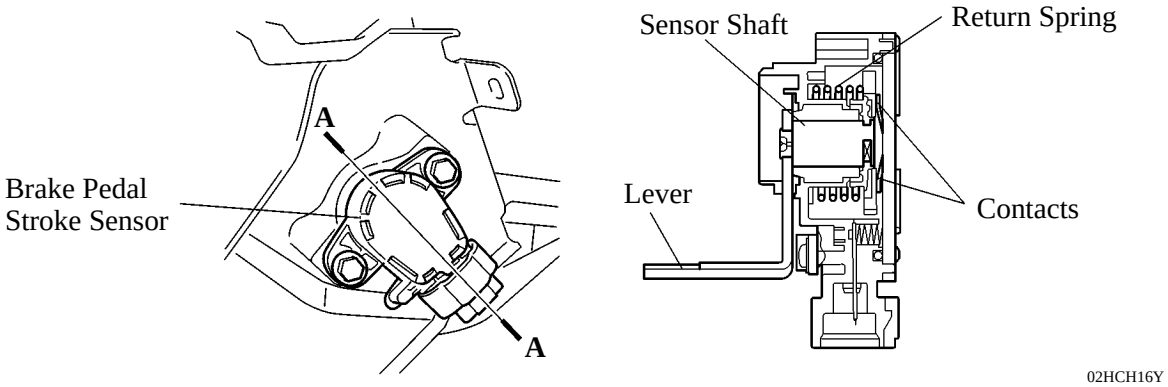

A - A Cross Section

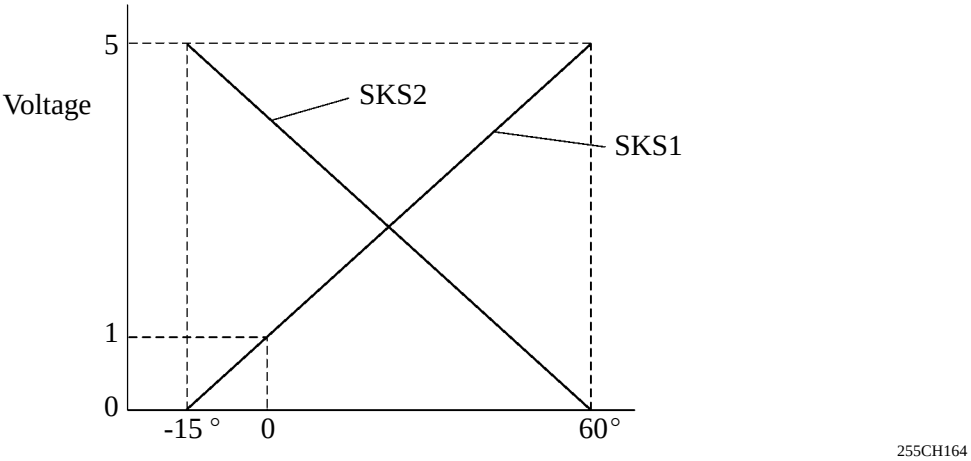

Sensor Lever Rotational Angle

Service Tip

- To install a brake pedal stroke sensor, which is available as a service part, perform as follows:
  - The sensor lever is secured with a pin to “0” stroke. (Do not detach the pin until the installation has been completed.)
  - In this state, install the sensor on the brake pedal (in the OFF state) on the vehicle.
  - After completing the installation, firmly press the brake pedal once to break off the pin that is securing the sensor in place.
  - Make sure the broken pin does not remain in the sensor lever.
- After replacing the brake pedal stroke sensor, initialization of brake pedal stroke sensor must be required on the skid control ECU side.
- For the actual procedure, refer to the 2007 Camry Hybrid Vehicle Repair Manual (Pub. No. RM02H0U).

Downloaded from www.Manualslib.com manuals search engine

3) Stroke Simulator

- The stroke simulator is mounted between the master cylinder and the brake actuator. The fluid pressure generated by the master cylinder is introduced to the stroke simulator through the built-in stroke simulator cut valve.
- The stroke simulator generates a pedal stroke in accordance with the driver's pedal effort during braking. Containing two types of coil springs with different spring constants, the stroke simulator provides pedal stroke characteristics in two stages in relation to the master cylinder pressure.

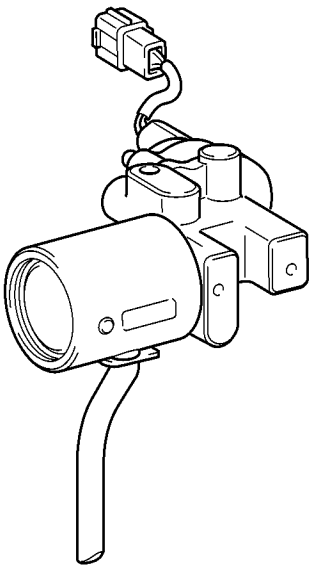

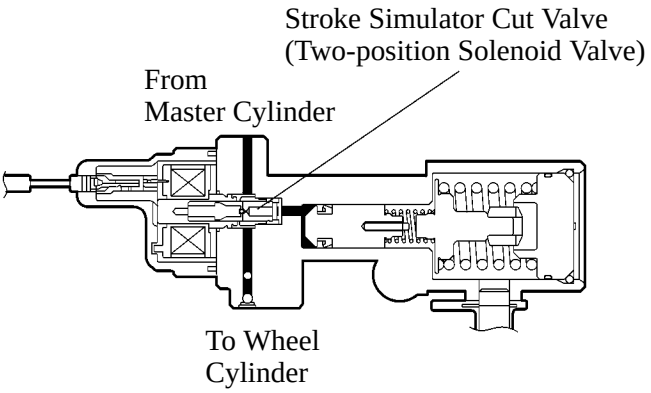

Cross Section

02HCH18Y

4) Yaw Rate and Deceleration Rate Sensor

A deceleration rate sensor is built into the yaw rate sensor. This sensor detects the yaw rate and lateral acceleration, and sends this signal to the skid control ECU.

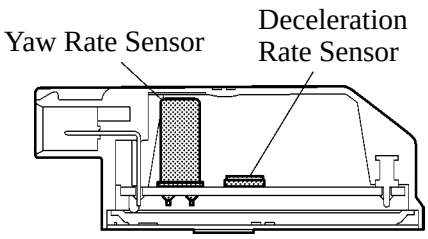

Cross Section

02HCH17TE

Service Tip

After replacing the yaw rate and deceleration rate sensor, or the skid control ECU, initialization of the yaw rate and deceleration rate sensor is required.
For the actual procedure, refer to the 2007 Camry Hybrid Vehicle Repair Manual (Pub. No. RM02H0U).

Downloaded from www.Manualslib.com manuals search engine

5) Steering Angle Sensor

- The steering angle sensor detects the steering direction and angle, and sends this signal to the skid control ECU.
- The sensor contains two gears for detecting the rotational movement. The magnetic field of the MRE (Magnetic Resistance Element), which is built into these gears, changes as the gears rotate. The change in the magnetic field causes the resistance of the sensor to change, which is detected by the skid control ECU in the form of the rotational angle of the steering.

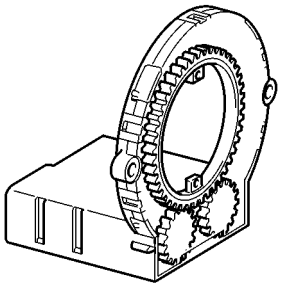

02HCH19Y

6) Power Source Backup Unit

- The power source backup unit is used as an auxiliary power source, in order to supply power to the brake system in a stable manner.
- This unit contains 12 capacitor cells, which store an electrical charge provided by the (12 V) vehicle power supply. When the voltage of the (12 V) vehicle power supply drops, the electrical charge stored in the capacitor cells is used as an auxiliary power supply to the brake system.

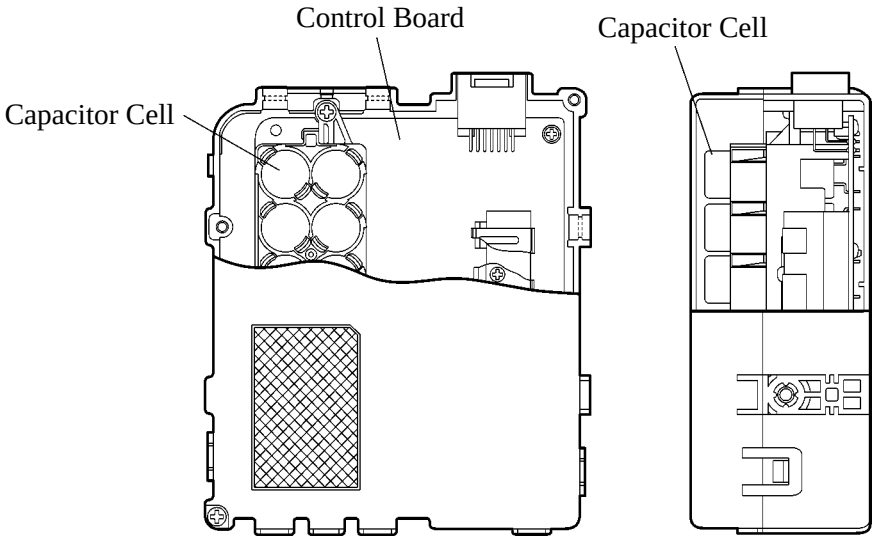

02HCH20TE

Service Tip

Immediately after the power switch is turned OFF, this unit is in the discharging state, and some voltage remains in the capacitors. Therefore, make sure to check for residual voltage and discharge it if necessary, before removing the power source backup unit from the vehicle or opening and inspecting the inside of the power source backup unit case.
For details, refer to the 2007 Camry Hybrid Vehicle Repair Manual (Pub. No. RM02H0U).

Downloaded from www.Manualslib.com manuals search engine

System Operation

1) Normal Brake Operation (with Regenerative Brake Cooperative Control)

a. General

- During normal braking, the master cylinder cut solenoid valves are closed and the fluid pressure circuits to the wheel cylinders remain independent. Accordingly, the fluid pressure generated by the master cylinder will not directly cause the wheel cylinders to actuate.
- The skid control ECU calculates the braking force required by the driver in accordance with the signals received from the master cylinder pressure sensors and the brake pedal stroke sensor. Then, the skid control ECU calculates the regenerative brake force value out of the required brake force and transmits the calculated value to the THS ECU. Upon receiving the value, the THS ECU generates a regenerative brake force. At the same time, the THS ECU transmits the actual regenerative brake force value to the skid control ECU. The skid control ECU controls the solenoid valves in order to cause the hydraulic brake system to generate a brake force value (which is obtained by subtracting the regenerative brake force from the brake force value required by the driver).

▶ System Diagram ◀

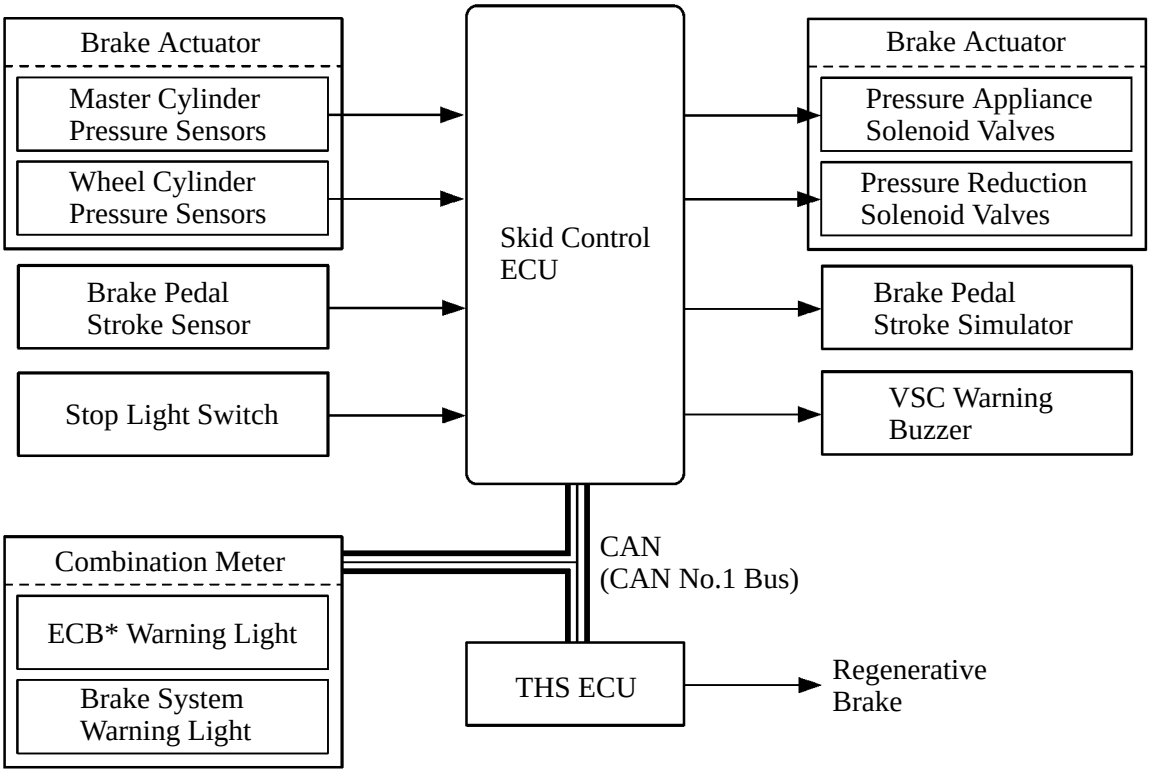

*: ECB (Electronically Controlled Brake System)

Downloaded from www.Manualslib.com manuals search engine

b. Pressure Increase

The skid control ECU calculates the target wheel cylinder pressure (equivalent to the brake force required by the driver) in accordance with the signals received from the master cylinder pressure sensor and the brake pedal stroke sensor. The skid control ECU compares the wheel cylinder pressure sensor signal and the target wheel cylinder pressure. If the target wheel cylinder pressure is lower, the skid control ECU boosts the pressure in the brake actuator. Accordingly, the fluid pressure in the accumulator is fed into the wheel cylinder. Moreover, this operation is the same when the hydraulic brake force must be increased in order to effect cooperative control in accordance with the changes in the regenerative brake force.

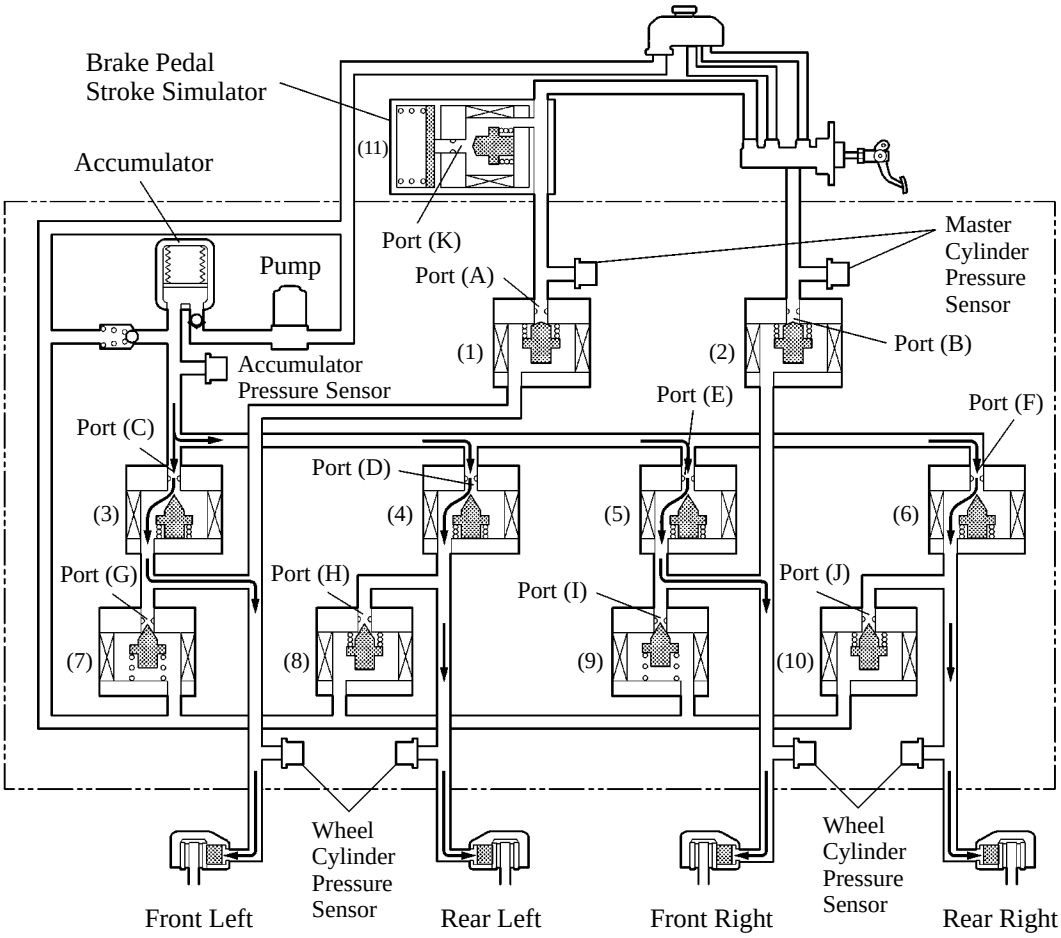

256CH108

Item		Normal Braking Increase Mode
(1), (2)	Master Cylinder Cut Solenoid Valve	ON (Close)
	Port: (A), (B)	
(3), (4), (5), (6)	Pressure Appliance Solenoid Valve	ON (Half-Open*)
	Port: (C), (D), (E), (F)	
(7), (9)	Pressure Reduction Solenoid Valve	OFF (Close)
	Port: (G), (I)	
(8), (10)	Pressure Reduction Solenoid Valve	ON (Close)
	Port: (H), (J)	
(11)	Stroke Simulator Cut Solenoid Valve	ON (Open)
	Port: (K)	

*: The solenoid valve constantly regulates the amount of opening of the port in accordance with the use conditions in order to control the fluid pressure.

Downloaded from www.Manualslib.com manuals search engine

c. Holding

The skid control ECU calculates the target wheel cylinder pressure (equivalent to the brake force required by the driver) in accordance with the signals received from the master cylinder pressure sensor and the brake pedal stroke sensor.
The skid control ECU compares the wheel cylinder pressure signal with the target wheel cylinder pressure. If they are equal, the skid control ECU controls the brake actuator in the hold state.
Accordingly, the wheel cylinder will be held at a constant pressure.

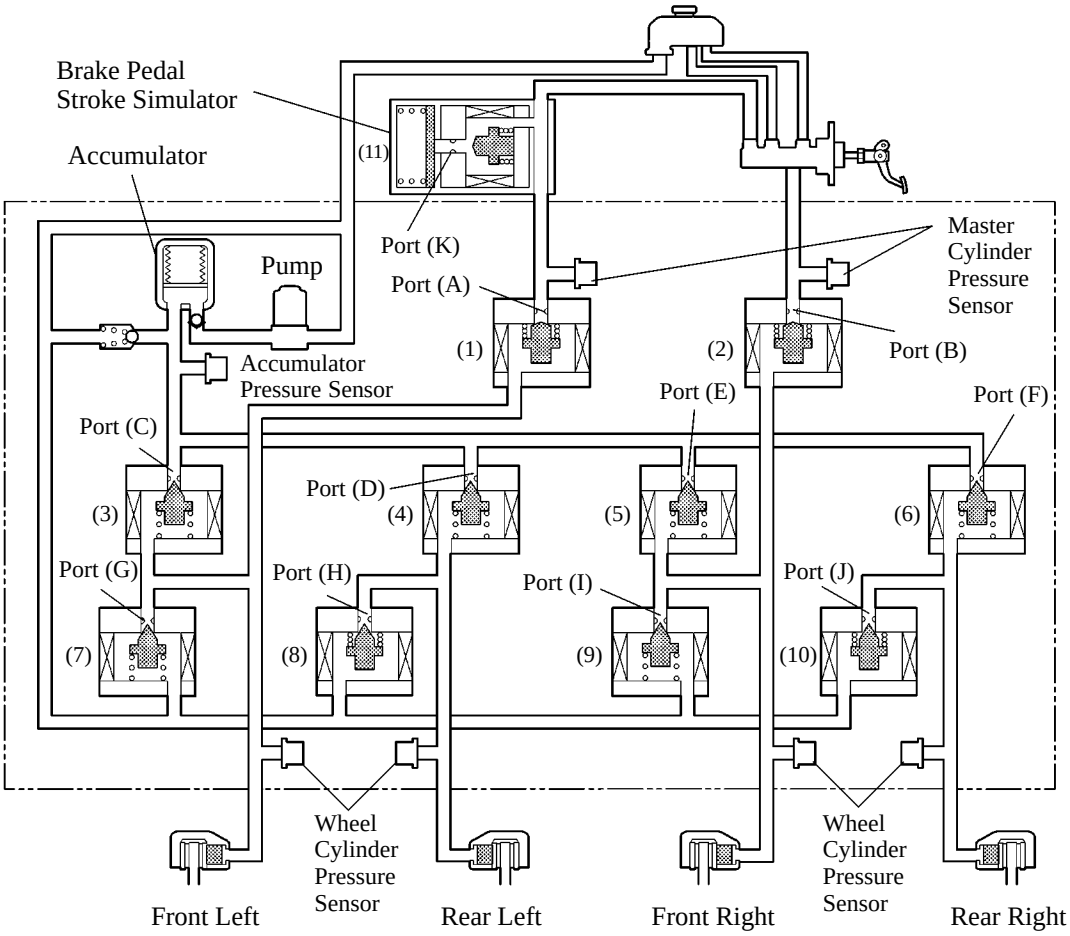

256CH109

Item		Normal Braking Holding Mode
(1), (2)	Master Cylinder Cut Solenoid Valve	ON (Close)
	Port: (A), (B)	
(3), (4), (5), (6)	Pressure Appliance Solenoid Valve	OFF (Close)
	Port: (C), (D), (E), (F)	
(7), (9)	Pressure Reduction Solenoid Valve	OFF (Close)
	Port: (G), (I)	
(8), (10)	Pressure Reduction Solenoid Valve	ON (Close)
	Port: (H), (J)	
(11)	Stroke Simulator Cut Solenoid Valve	ON (Open)
	Port: (K)	

Downloaded from www.Manualslib.com manuals search engine

d. Pressure Reduce

The skid control ECU calculates the target wheel cylinder pressure (equivalent to the brake force required by the driver) in accordance with the signals received from the master cylinder pressure sensor and the brake pedal stroke sensor.
The skid control ECU compares the wheel cylinder pressure signal with the target wheel cylinder pressure. If the target wheel cylinder pressure is higher, the skid control ECU reduces the pressure in the brake actuator. Accordingly, the pressure in the wheel cylinder decreases.
Moreover, this operation is the same when the hydraulic brake force must be decreased in order to effect cooperative control in accordance with the changes in the regenerative brake force.

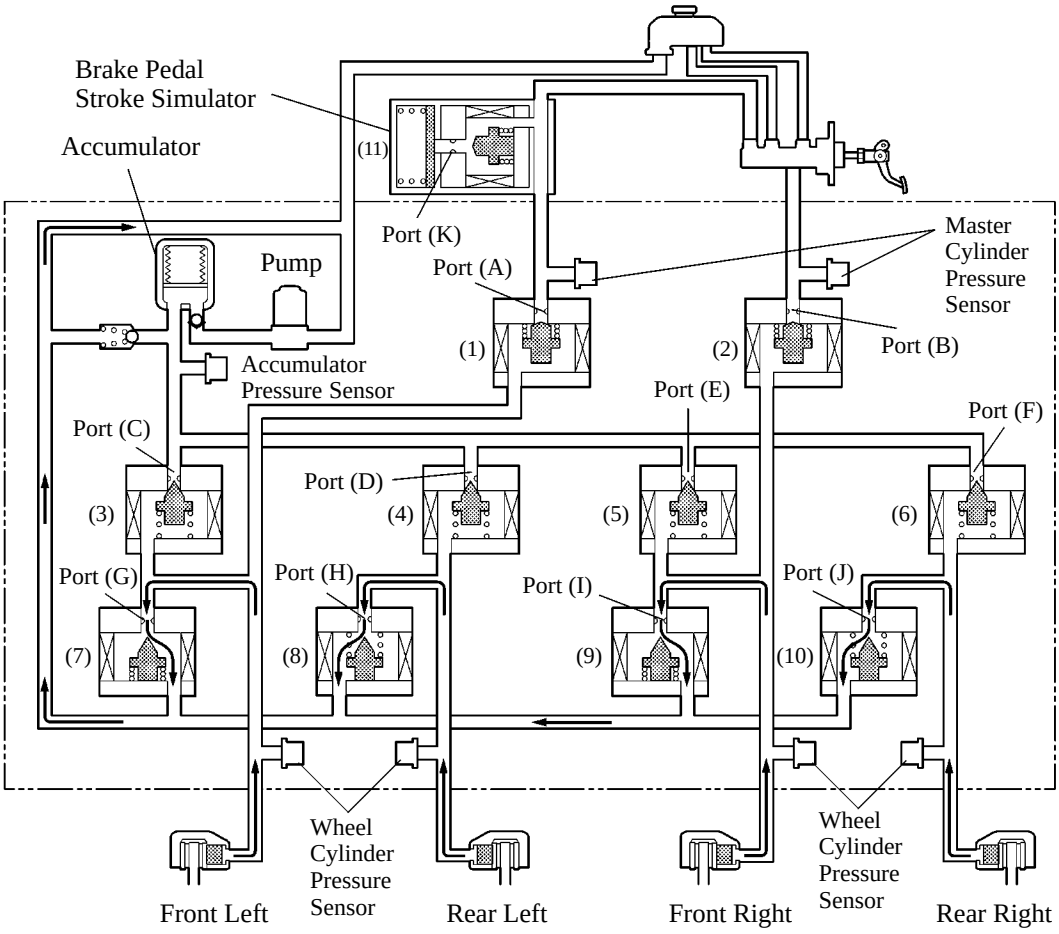

256CH110

Item		Normal Braking Reduction Mode
(1), (2)	Master Cylinder Cut Solenoid Valve	ON (Close)
	Port: (A), (B)	
(3), (4), (5), (6)	Pressure Appliance Solenoid Valve	OFF (Close)
	Port: (C), (D), (E), (F)	
(7), (9)	Pressure Reduction Solenoid Valve	ON (Half-Open*)
	Port: (G), (I)	
(8), (10)	Pressure Reduction Solenoid Valve	ON (Half-Open*)
	Port: (H), (J)	
(11)	Stroke Simulator Cut Solenoid Valve	ON (Open)
	Port: (K)	

*: The solenoid valve constantly regulates the amount of opening of the port in accordance with the use conditions in order to control the fluid pressure.

Downloaded from www.Manualslib.com manuals search engine

e. Brake System Stops or During Power Supply Malfunction

If the brake system stops or no accumulator pressure is supplied due to some malfunction, the skid control ECU operates the fail-safe function. This function opens the master cylinder solenoid valve in the brake actuator, in order to secure a fluid passage between the master cylinder and the wheel cylinder. Thus, the brakes can be applied by operating only the front wheel cylinders under the fluid pressure generated by the master cylinder. At this time, port (K) of the stroke simulator cut solenoid valve closes in order to prevent the fluid pressure generated by the master cylinder from being negatively affected by the operation of the stroke simulator.

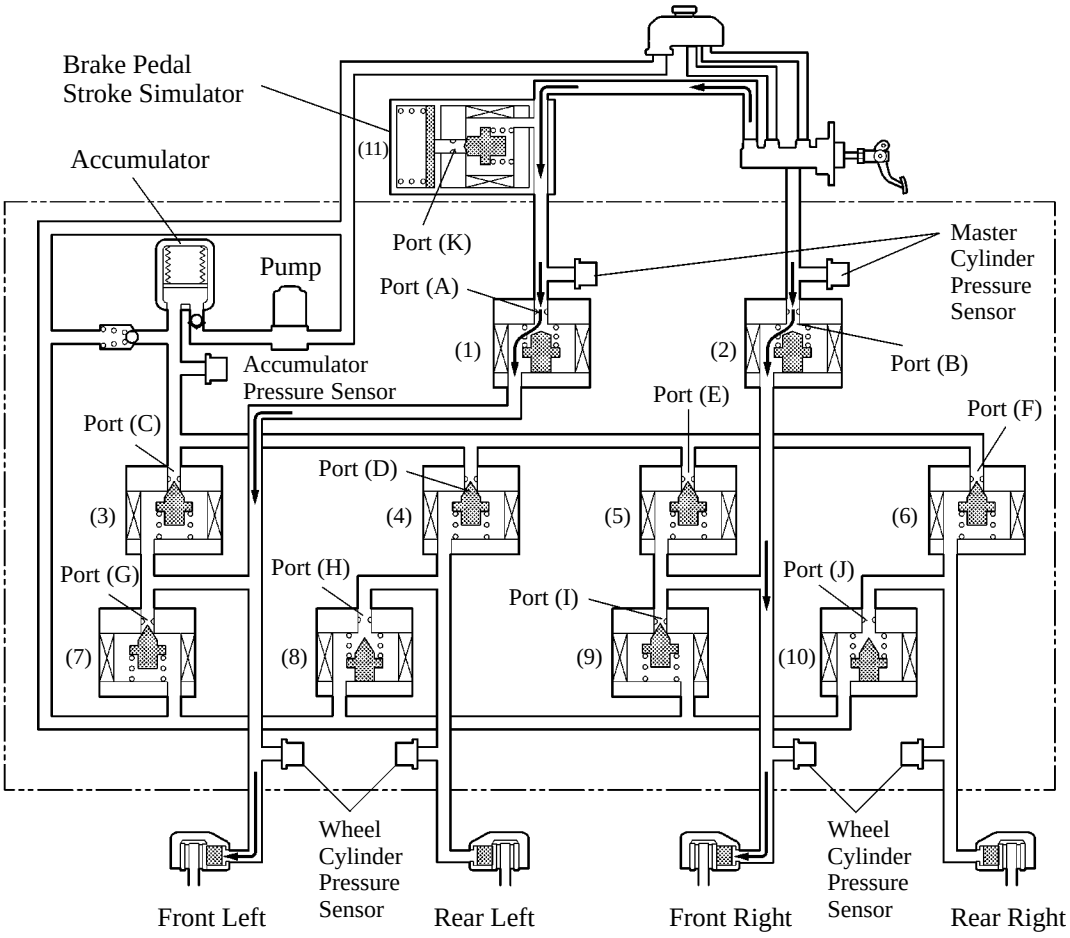

256CH111

Item		System OFF & Fail-Safe Mode
(1), (2)	Master Cylinder Cut Solenoid Valve	OFF (Open)
	Port: (A), (B)	
(3), (4), (5), (6)	Pressure Appliance Solenoid Valve	OFF (Close)
	Port: (C), (D), (E), (F)	
(7), (9)	Pressure Reduction Solenoid Valve	OFF (Close)
	Port: (G), (I)	
(8), (10)	Pressure Reduction Solenoid Valve	OFF (Open)
	Port: (H), (J)	
(11)	Stroke Simulator Cut Solenoid Valve	OFF (Close)
	Port: (K)	

Downloaded from www.Manualslib.com manuals search engine

2) ABS with EBD Operation

Based on the signals received from the four speed sensors, the skid control ECU calculates each wheel speed and deceleration, and checks wheel slipping conditions. And according to the slipping condition, the skid control ECU controls the pressure increase valve and pressure reduction valve in order to adjust the fluid pressure of the each wheel cylinder in the following 3 modes: pressure reduction, pressure holding, pressure increase modes.

▶ System Diagram ◀

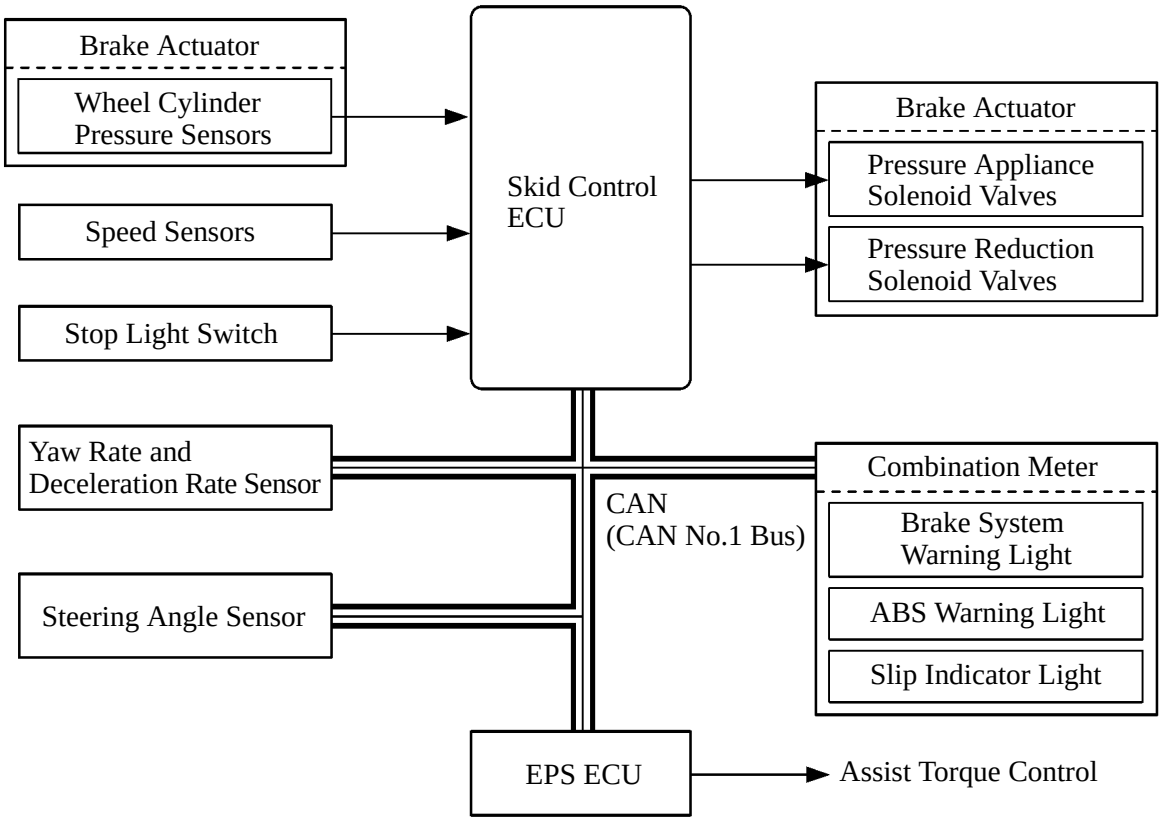

02HCH22P

Downloaded from www.Manualslib.com manuals search engine

Not Activated		Normal Braking	—	—
Activated		Increase Mode	Holding Mode	Reduction Mode
Hydraulic Circuit		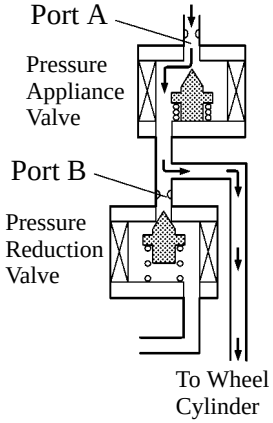	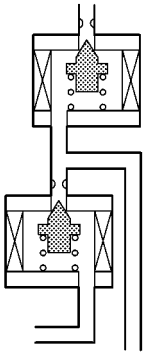	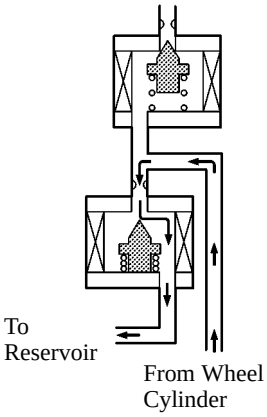
Front	Pressure Appliance Solenoid Valve (Port A)	ON (Half-Open*)	OFF (Close)	OFF (Close)
	Pressure Reduction Solenoid Valve (Port B)	OFF (Close)	OFF (Close)	ON (Half-Open*)
Hydraulic Circuit		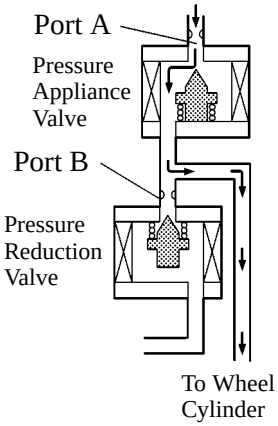	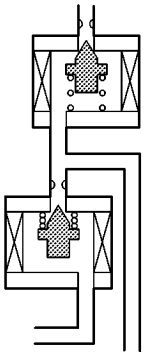	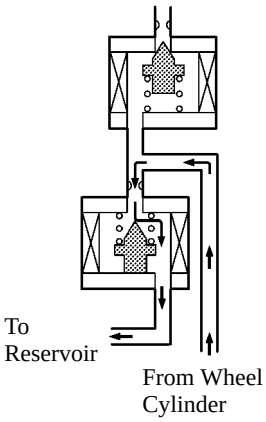
Rear	Pressure Appliance Solenoid Valve (Port A)	ON (Half-Open*)	OFF (Close)	OFF (Close)
	Pressure Reduction Solenoid Valve (Port B)	ON (Close)	ON (Close)	ON (Half-Open*)
Wheel Cylinder Pressure		Increase	Hold	Reduction

*: The solenoid valve constantly regulates the amount of opening of the port in accordance with the use conditions in order to control the fluid pressure.

Downloaded from www.Manualslib.com manuals search engine

3) Brake Assist Operation

In the event of emergency braking, the skid control ECU detects the driver's intention based on the speed of the pressure increase in the master cylinder determined by the pressure sensor signal. If the ECU judges the need for the additional brake assist, additional fluid pressure is generated by the pump in the actuator and directed to the wheel cylinders.

▶ System Diagram ◀

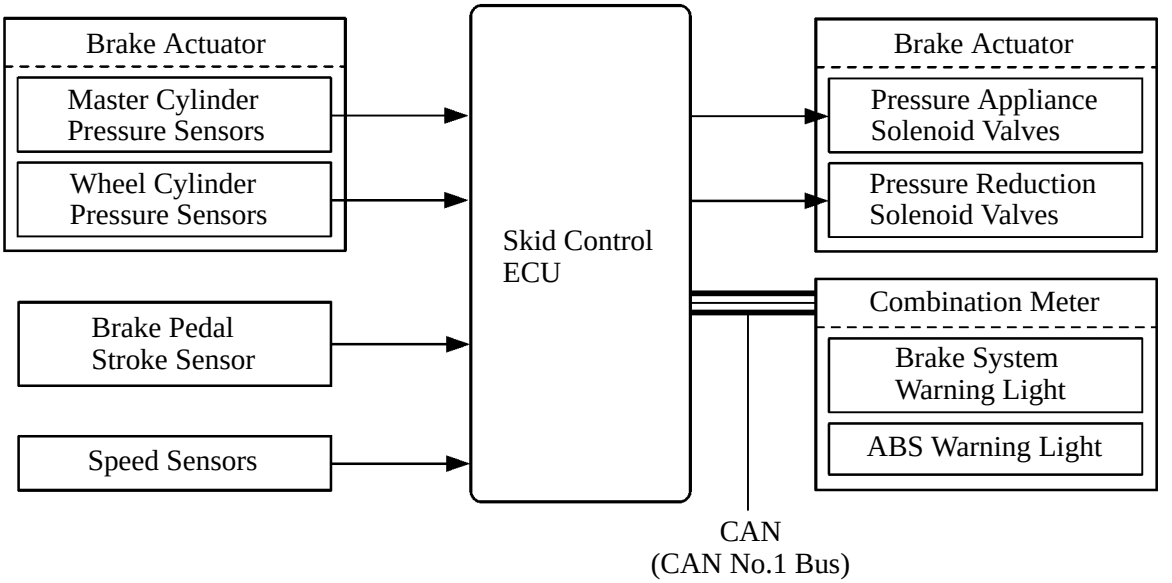

02HCH23P

Downloaded from www.Manualslib.com manuals search engine

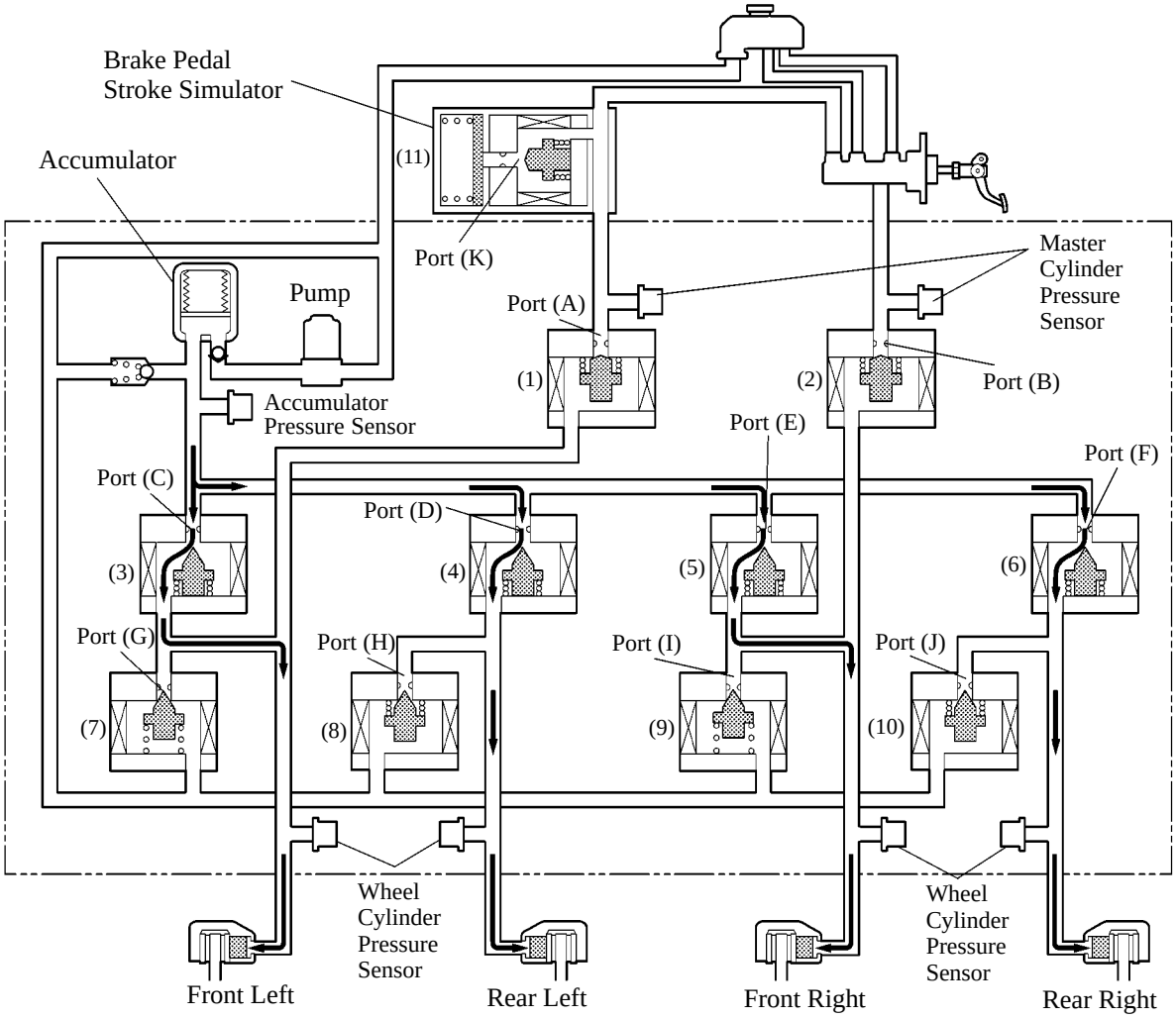

Item		Normal Braking Increase Mode	Brake Assist Activated
(1), (2)	Master Cylinder Cut Solenoid Valve	ON (Close)	ON (Close)
	Port: (A), (B)		
(3), (4), (5), (6)	Pressure Appliance Solenoid Valve	ON (Half-Open*)	ON (Half-Open*)
	Port: (C), (D), (E), (F)		
(7), (9)	Pressure Reduction Solenoid Valve	OFF (Close)	OFF (Close)
	Port: (G), (I)		
(8), (10)	Pressure Reduction Solenoid Valve	ON (Close)	ON (Close)
	Port: (H), (J)		
(11)	Stroke Simulator Cut Solenoid Valve	ON (Open)	ON (Open)
	Port: (K)		

*: The solenoid valve constantly regulates the amount of opening of the port in accordance with the use conditions in order to control the fluid pressure.

Downloaded from www.Manualslib.com manuals search engine

4) TRAC Operation

- The fluid pressure generated by the pump is regulated by the pressure appliance solenoid valve and pressure reduction solenoid valve to the required pressure. Thus, the wheel cylinders of the drive wheels are controlled in the following 3 modes: pressure reduction, pressure holding, and pressure increase modes, to restrain the slippage of the drive wheels.
- The pressure appliance valve and the pressure reduction valve are turned ON/OFF according to the ABS operation pattern.
- The diagram on the next page shows the hydraulic circuit in the pressure increase mode when the TRAC function is activated.

▶ System Diagram ◀

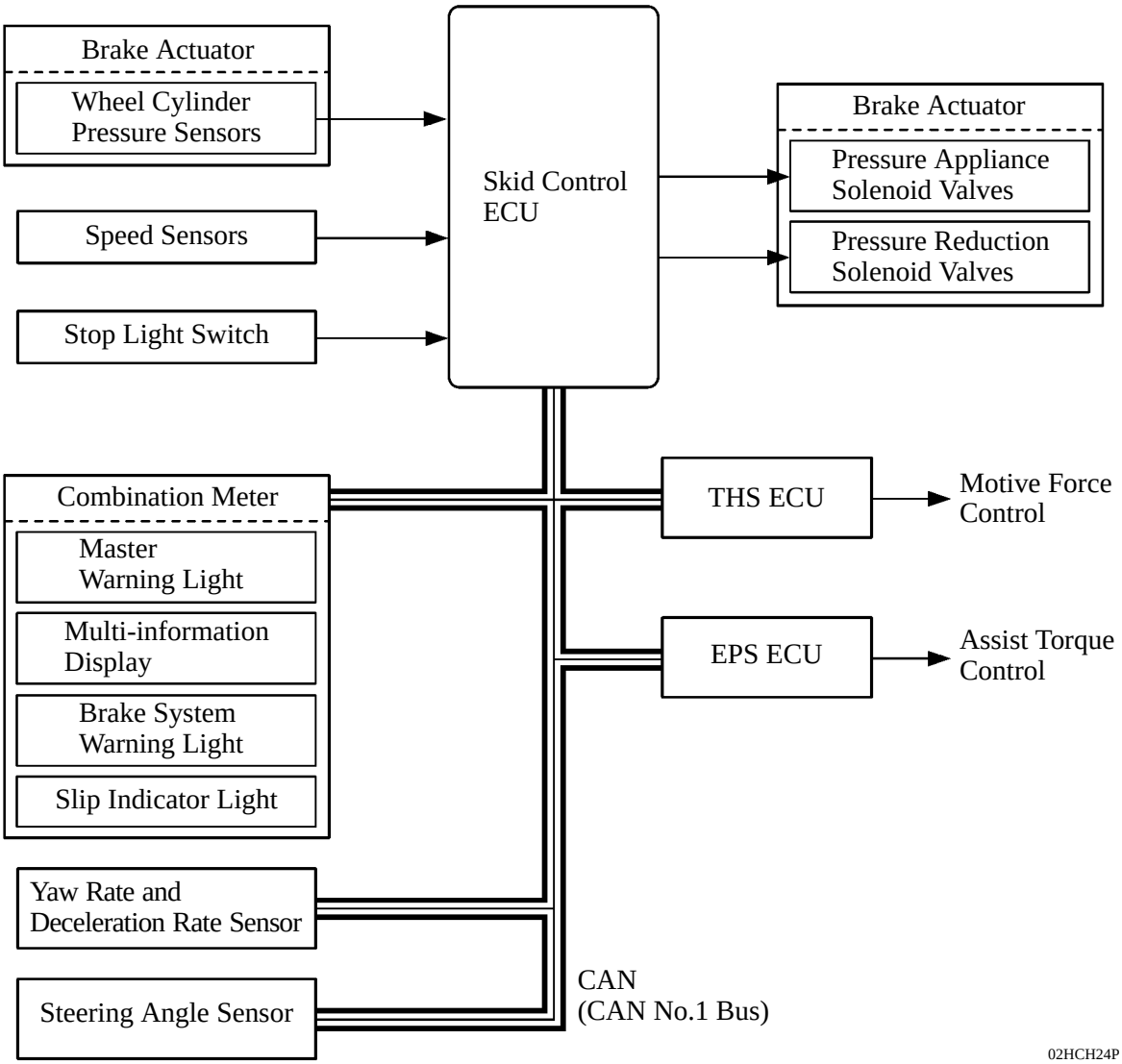

Service Tip

A service mode has been created for ’07 Camry Hybrid model. In this mode, TRAC and VSC functions can be forcibly turned OFF, either through the operation of a hand-held tester or by operating the shift lever and depressing the accelerator pedal.
For details, refer to the 2007 Camry Hybrid Vehicle Repair Manual (Pub. No. RM02H0U).

Downloaded from www.Manualslib.com manuals search engine

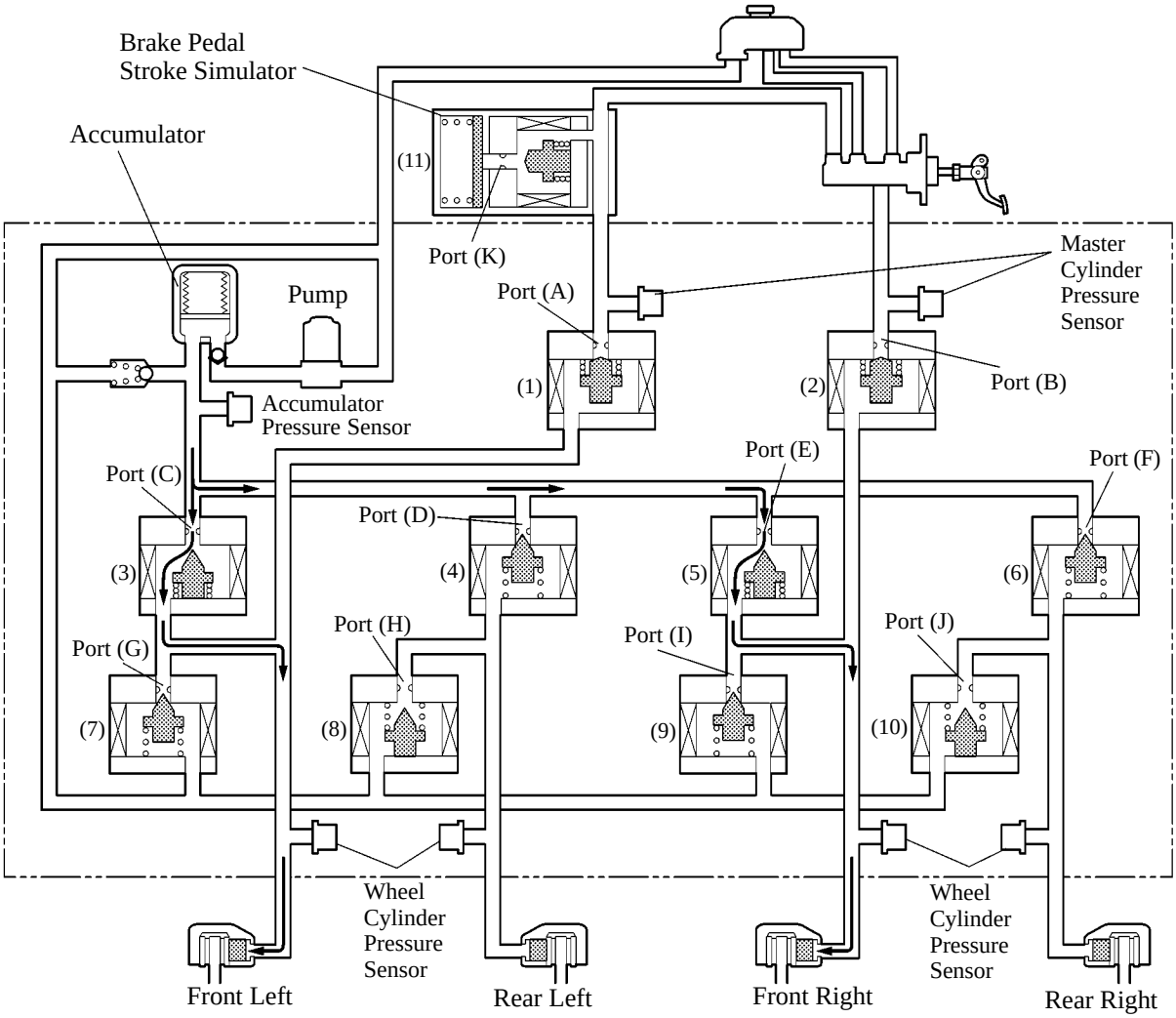

Increase Mode

277CH155

Item			TRAC not Activated	TRAC Activated		
				Increase Mode	Holding Mode	Reduction Mode
(1), (2)	Master Cylinder Cut Solenoid Valve		ON (Close)	ON (Close)	ON (Close)	ON (Close)
	Port: (A), (B)					
Front Brake	(3), (5)	Pressure Appliance Solenoid Valve	OFF (Close)	ON (Half-Open*)	OFF (Close)	OFF (Close)
		Port: (C), (E)				
	(7), (9)	Pressure Reduction Solenoid Valve	OFF (Close)	OFF (Close)	OFF (Close)	ON (Half-Open*)
		Port: (G), (I)				
	Wheel Cylinder Pressure		—	Increase	Hold	Reduction
Rear Brake	(4), (6)	Pressure Appliance Solenoid Valve	OFF (Close)	OFF (Close)	OFF (Close)	OFF (Close)
		Port: (D), (F)				
	(8), (10)	Pressure Reduction Solenoid Valve	OFF (Open)	OFF (Open)	OFF (Open)	OFF (Open)
		Port: (H), (J)				
	Wheel Cylinder Pressure		—	—	—	—
(11)	Stroke Simulator Cut Solenoid Valve		ON (Open)	ON (Open)	ON (Open)	ON (Open)
	Port: (K)					

*: The solenoid valve constantly regulates the amount of opening of the port in accordance with the use conditions in order to control the fluid pressure.

Downloaded from www.Manualslib.com manuals search engine

5) VSC Operation

a. General

The VSC function controls the solenoid valves in order to send the fluid pressure stored in the accumulator to the brake wheel cylinders at the respective wheels, through routes that are different from those used during normal braking. Thus, the function operates in the following 3 modes: pressure reduction, pressure holding, and pressure increase. As a result, the tendency of the front wheels or the rear wheels to skid is restrained.

▶ System Diagram ◀

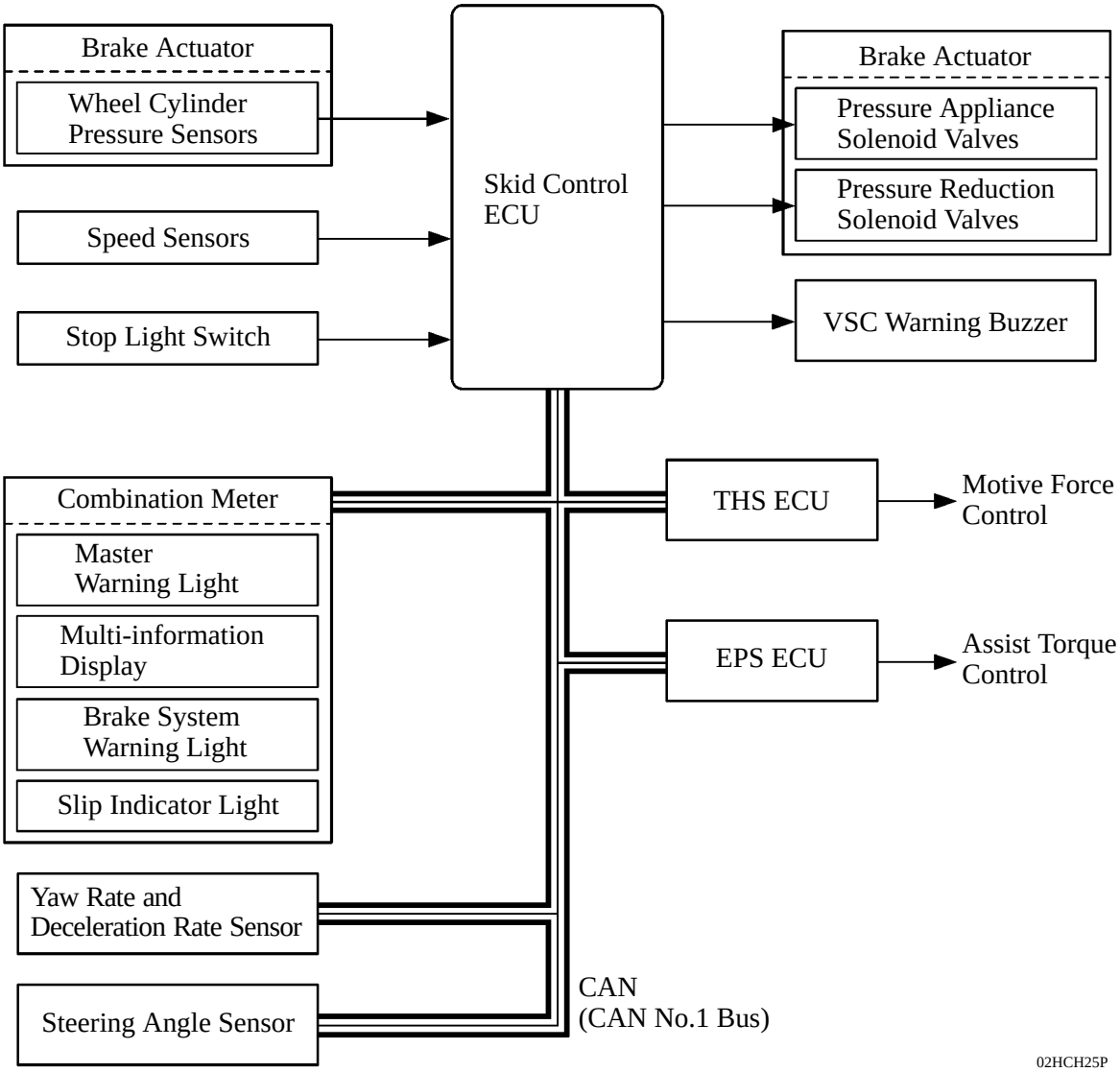

Service Tip

A service mode has been created for ’07 Camry Hybrid model. In this mode, TRAC and VSC functions can be forcibly turned OFF, either through the operation of a hand-held tester or by operating the shift lever and depressing the accelerator pedal.
For details, refer to the 2007 Camry Hybrid Vehicle Repair Manual (Pub. No. RM02H0U).

Downloaded from www.Manualslib.com manuals search engine

b. Front Wheel Skid Restraint Control (Turning to the Right)

- In the front wheel skid tendency, this management function applies the brake to the rear wheels and front wheel of the outer side of the turn. Also, depending on whether the brake is ON or OFF and the condition of the vehicle, there are circumstances in which the brake might not be applied to the wheels even if those wheels are targeted for braking. The diagram below shows the hydraulic circuit in the pressure increase mode, as it restrains the front wheel skid condition while the vehicle makes a right turn.
- The pressure appliance valve and the pressure reduction valve are turned ON/OFF according to the ABS operation pattern.

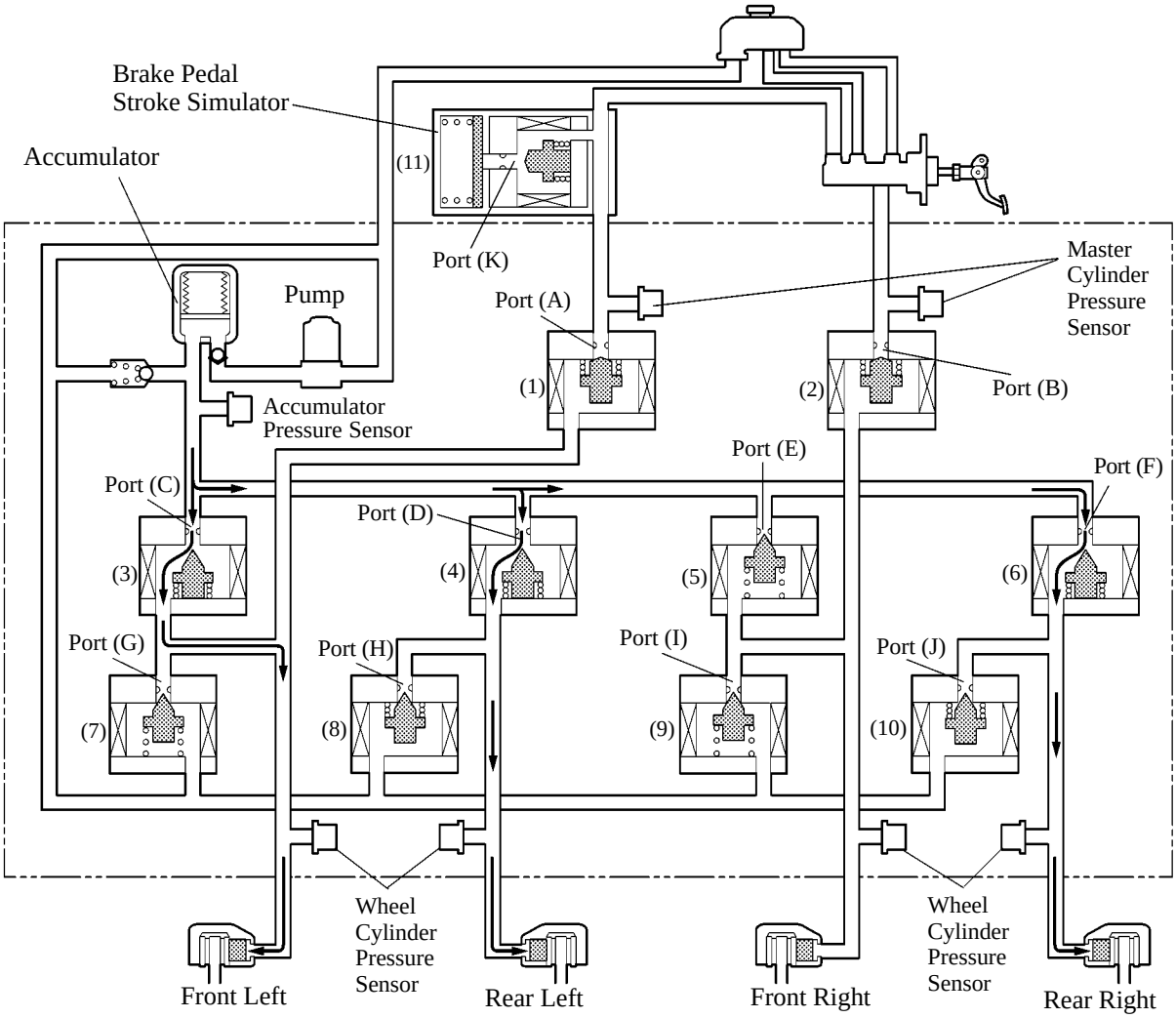

Increase Mode

277CH153

Downloaded from www.Manualslib.com manuals search engine

Item			VSC not Activated	VSC Activated		
				Increase Mode	Holding Mode	Reduction Mode
(1), (2)	Master Cylinder Cut Solenoid Valve Port: (A), (B)		ON (Close)	ON (Close)	ON (Close)	ON (Close)
Front Brake	(3)	Pressure Appliance Solenoid Valve Port: (C)	OFF (Close)	ON (Half-Open*)	OFF (Close)	OFF (Close)
	(5)	Pressure Appliance Solenoid Valve Port: (E)	OFF (Close)	OFF (Close)	OFF (Close)	OFF (Close)
	(7)	Pressure Reduction Solenoid Valve Port: (G)	OFF (Close)	OFF (Close)	OFF (Close)	ON (Half-Open*)
	(9)	Pressure Reduction Solenoid Valve Port: (I)	OFF (Close)	OFF (Close)	OFF (Close)	OFF (Close)
	Wheel Cylinder Pressure	Right	—	—	—	—
		Left	—	Increase	Hold	Reduction
Rear Brake	(4)	Pressure Appliance Solenoid Valve Port: (D)	OFF (Close)	OFF (Close)	OFF (Close)	OFF (Close)
	(6)	Pressure Appliance Solenoid Valve Port: (F)	OFF (Close)	ON (Half-Open*)	OFF (Close)	OFF (Close)
	(8)	Pressure Reduction Solenoid Valve Port: (H)	OFF (Open)	ON (Close)	OFF (Open)	ON (Half-Open*)
	(10)	Pressure Reduction Solenoid Valve Port: (J)	OFF (Open)	ON (Close)	ON (Close)	ON (Half-Open*)
	Wheel Cylinder Pressure	Right Left	—	Increase	Hold	Reduction
(11)	Stroke Simulator Cut Solenoid Valve Port: (K)		ON (Open)	ON (Open)	ON (Open)	ON (Open)

*: The solenoid valve constantly regulates the amount of opening of the port in accordance with the use conditions in order to control the fluid pressure.

Downloaded from www.Manualslib.com manuals search engine

c. Rear Wheel Skid Restraint Control (Turning to the Right)

- In rear wheel skid tendency, this management function applies the brake to the front wheel of the outer circle of the turn. In some cases, the skid control ECU applies the brake to the rear wheels, as necessary. As an example, the diagram below shows the hydraulic circuit in the pressure increase mode, as it restrains the rear wheel skid condition while the vehicle makes a right turn.
- As in front wheel skid restraint control, the pressure appliance valve and the pressure reduction valve are turned ON/OFF according to the ABS operating pattern.

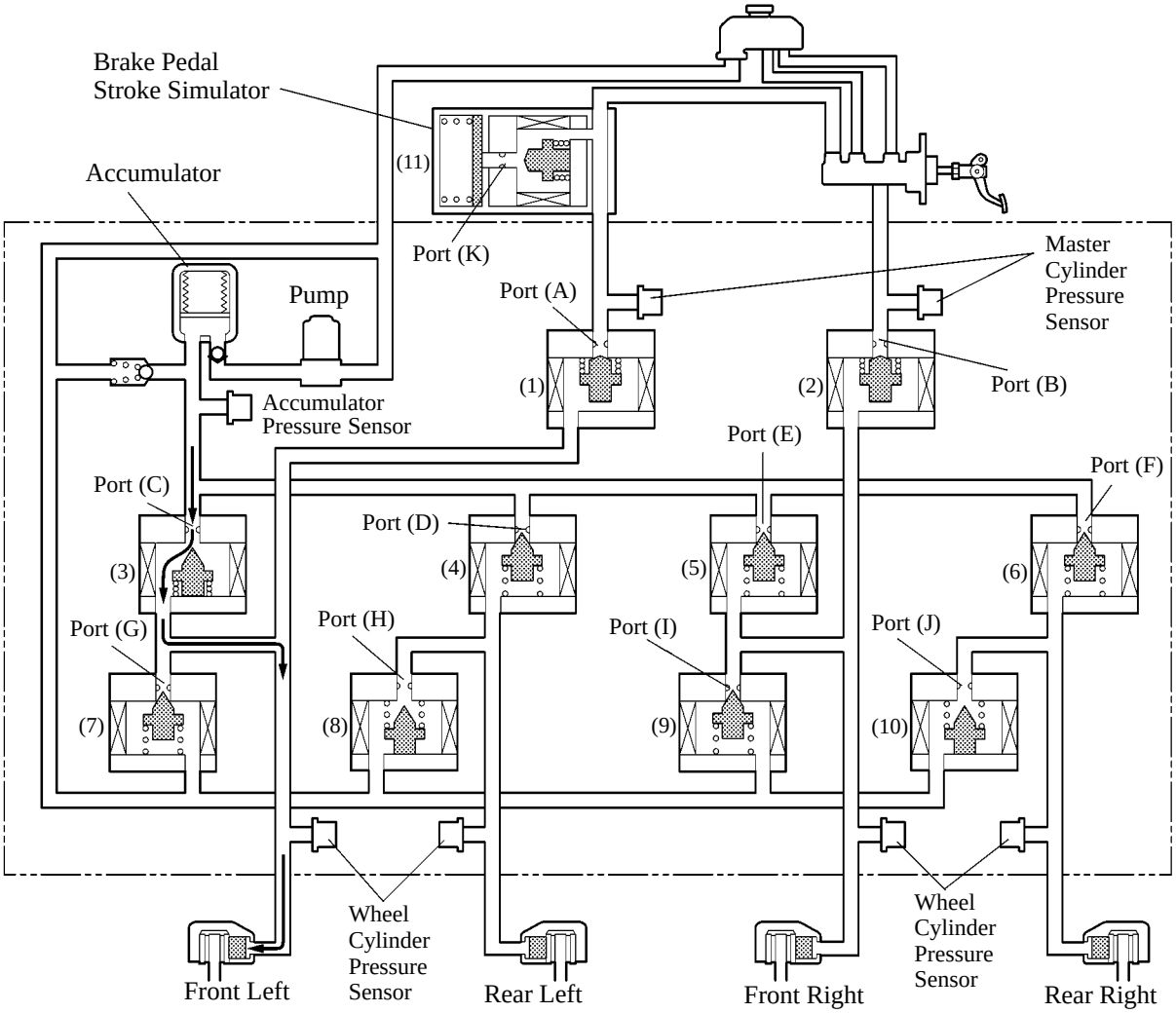

Increase Mode

256CH114

Downloaded from www.Manualslib.com manuals search engine

Item			VSC not Activated	VSC Activated		
				Increase Mode	Holding Mode	Reduction Mode
(1), (2)	Master Cylinder Cut Solenoid Valve Port: (A), (B)		ON (Close)	ON (Close)	ON (Close)	ON (Close)
Front Brake	(3)	Pressure Appliance Solenoid Valve Port: (C)	OFF (Close)	ON (Half-Open*1)	OFF (Close)	OFF (Close)
	(5)	Pressure Appliance Solenoid Valve Port: (E)	OFF (Close)	OFF (Close)	OFF (Close)	OFF (Close)
	(7)	Pressure Reduction Solenoid Valve Port: (G)	OFF (Close)	OFF (Close)	OFF (Close)	ON (Half-Open*1)
	(9)	Pressure Reduction Solenoid Valve Port: (I)	OFF (Close)	OFF (Close)	OFF (Close)	OFF (Close)
	Wheel Cylinder Pressure	Right	—	—	—	—
		Left	—	Increase	Hold	Reduction
Rear Brake	(4)	Pressure Appliance Solenoid Valve Port: (D)	OFF (Close)	OFF (Close) [ON (Half-Open*1)]*2	OFF (Close)	OFF (Close)
	(6)	Pressure Appliance Solenoid Valve Port: (F)	OFF (Close)	OFF (Close) [ON (Half-Open*1)]*2	OFF (Close)	OFF (Close)
	(8)	Pressure Reduction Solenoid Valve Port: (H)	OFF (Open)	OFF (Open)	ON (Close)	ON (Close) [ON (Half-Open*1)]*2
	(10)	Pressure Reduction Solenoid Valve Port: (J)	OFF (Open)	OFF (Open)	ON (Close)	ON (Close) [ON (Half-Open*1)]*2
	Wheel Cylinder Pressure	Right Left	—	—	—	—
(11)	Stroke Simulator Cut Solenoid Valve Port: (K)		ON (Open)	ON (Open)	ON (Open)	ON (Open)

*1: The solenoid valve constantly regulates the amount of opening of the port in accordance with the use conditions in order to control the fluid pressure.

*2: In some cases, the skid control ECU applies the brake of the rear wheels, as necessary.

Downloaded from www.Manualslib.com manuals search engine

Skid Control ECU

1) Motive Force Control

During a brake control operation (TRAC or VSC function), the skid control ECU outputs a motive force control request signal to the THS ECU. Upon receiving this signal, the THS ECU effects motive force control.

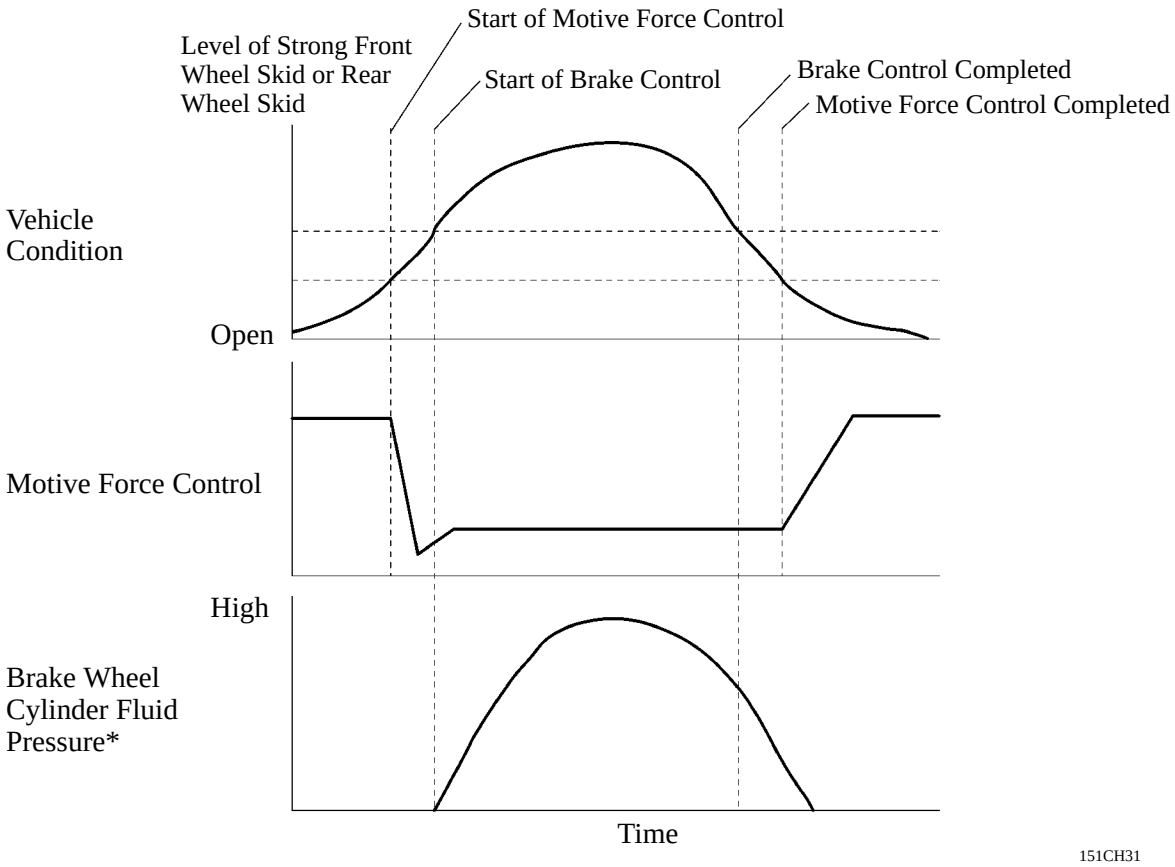

*: The wheel cylinder that activates varies depending on the condition of the vehicle.

Downloaded from www.Manualslib.com manuals search engine

2) Diagnosis

- If a failure occurs in one of the sensors or actuators in the brake system, the skid control ECU informs the driver of the failure in the brake system by illuminating the ECB* warning light, brake system warning light, or ABS warning light in the combination meter, or displaying a VSC warning message/“CHECK VSC SYSTEM” (on the multi-information display).
- At the same time, a DTC (Diagnostic Trouble Code) is stored in memory. The DTC can be accessed by connecting the SST (09843-18040) between the Tc and CG terminals of the DLC3 connector and checking the blinking of the ABS warning light, ECB* warning light, or the “DIAG VSC” that appears on the multi-information display. Another way to access the DTC is to connect a hand-held tester and read the code that appears on the tester.
- This system has a sensor signal check (test mode) function. This function is activated by connecting the SST (09843-18040) between the Ts and CG terminals of the DLC3 or by connecting a hand-held tester.
- If the CAN has communication error ECU or sensors, multiple DTCs are output simultaneously to indicate the malfunction location.
- Three-digit information codes have been provided in the conventional DTC as subset of a primary five-digit code. This enables the troubleshooting procedure to further narrow down a trouble area to identify a problem.
- For details on the DTC that are stored in skid control ECU memory and the DTC that are output through the sensor signal check function, see the 2007 Camry Hybrid Vehicle Repair Manual (Pub. No. RM02H0U).

*: ECB (Electronically Controlled Brake System)

▶ Display example of the multi-information display ◀

Normal system code is displayed

025CH50P

DTC is displayed

025CH56P

Service Tip

The skid control ECU uses the CAN protocol for diagnostic communication. Therefore, a hand-held tester and a dedicated adapter [CAN VIM (Vehicle Interface Module)] are required for accessing diagnostic data. For details, see the 2007 Camry Hybrid Vehicle Repair Manual (Pub. No. RM02H0U).

3) Fail-Safe

- If a failure occurs in the skid control ECU, sensors, and/or brake actuators, the system continues effecting brake control by excluding the failed area and using only the areas that are operating normally.
- If the regenerative brake becomes unusable due to a failure in communication with the THS ECU, the skid control ECU uses the hydraulic brake force to control the entire braking force.

Downloaded from www.Manualslib.com manuals search engine

TIRE PRESSURE WARNING SYSTEM

■DESCRIPTION

- A direct-sensing type tire pressure warning system is used on U.S.A. model.
- If the vehicle continues to be driven with 1 or more of the 4 inflated to a low air pressure that could cause problems during driving, this system will illuminate the tire pressure warning light to inform the driver of the low air pressure.
- Furthermore, this system directly senses the air pressure of each tire through tire pressure warning system valve & transmitter that are attached to each wheel.
- After tire replacement, firstly register tire pressure warning system valve & transmitter IDs into the tire pressure warning system ECU, and then store the appropriate tire pressure in the ECU using the tire pressure warning system reset switch.

▶ System Diagram ◀

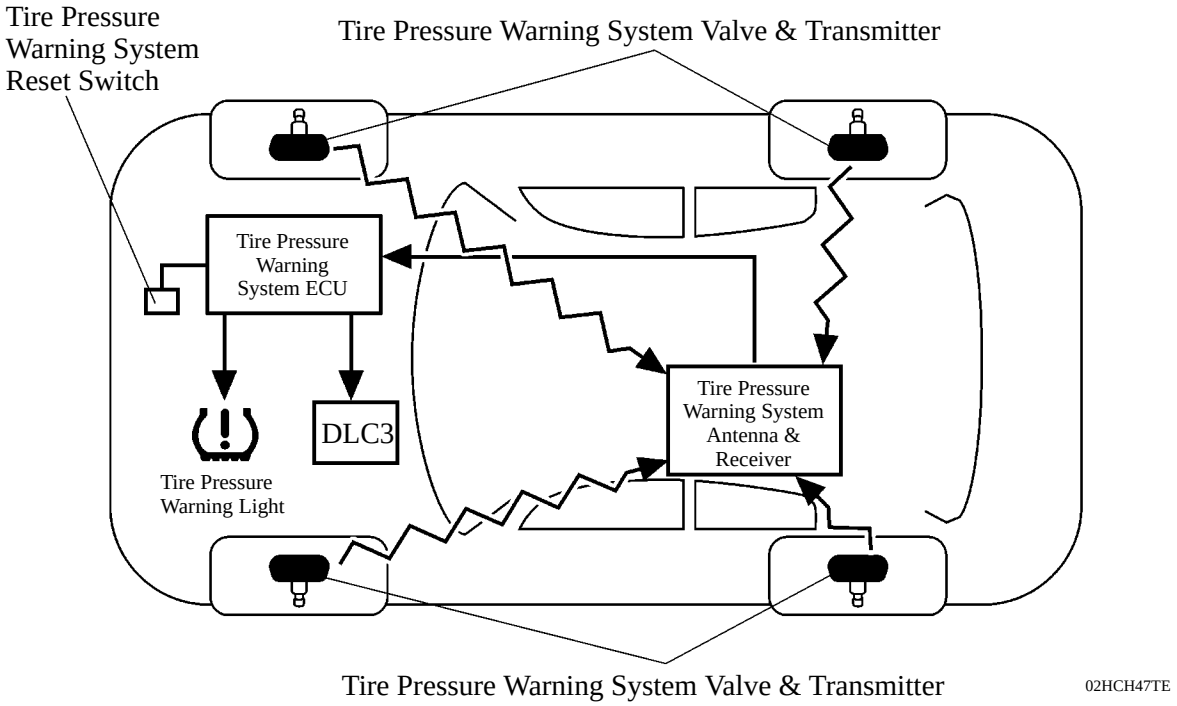

Downloaded from www.Manualslib.com manuals search engine

■LAYOUT OF MAIN COMPONENTS

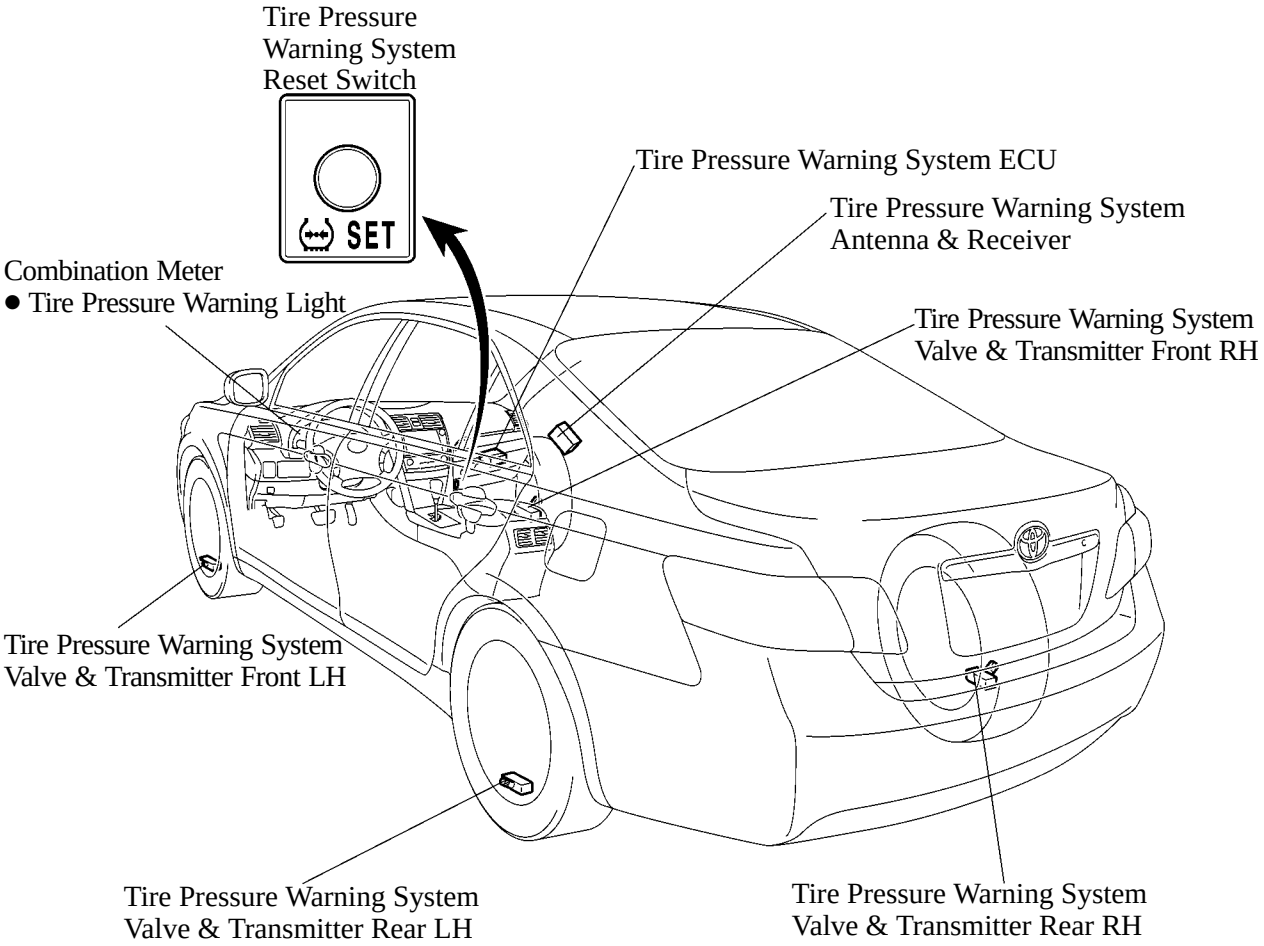

02HCH48TE

■FUNCTION OF MAIN COMPONENTS

Component		Outline
Combination Meter		Transmits the vehicle speed signal to the tire pressure warning system ECU for vehicle speed correction.
	Tire Pressure Warning Light	● Turns ON or blinks to warn the driver in accordance with the signal from the tire pressure warning system ECU. ● Displays the 2-digit DTC (Diagnostic Trouble Code).
Tire Pressure Warning System Reset Switch		The appropriate air pressures of the tires currently mounted on the vehicle are stored in the tire pressure warning system ECU by operating the tire pressure warning system reset switch.
Tire Pressure Warning System Valve & Transmitter		Detects the inflation pressure and internal temperature of the tire and transmits the measured value and the ID number to the tire pressure warning antenna & receiver.
Tire Pressure Warning System Antenna & Receiver		Receives the tire pressure warning system valve & transmitter signal and transmits this data to the tire pressure warning system ECU.
Tire Pressure Warning System ECU		● Receives the data from the tire pressure warning system antenna & receiver and monitors the tire inflation pressure. ● When the tire pressure warning system ECU detects a drop in the tire inflation pressure or a system malfunction, it outputs the respective signal to the combination meter.

Downloaded from www.Manualslib.com manuals search engine

■CONSTRUCTION AND OPERATION

1. Tire Pressure Warning System Valve & Transmitter

- The tire pressure warning system valve & transmitter is integrated in the air valve of a disc wheel. It measures the pressure and the temperature of the air in the tire and transmits the measured values and a recognition ID to the tire pressure warning system valve & transmitter.
- If the battery voltage drops, the tire pressure warning system valve & transmitter assembly must be replaced. Furthermore, if the battery voltage drops, the tire pressure warning system valve & transmitter will be unable to transmit signals, which causes a DTC to be output.
- Tire pressure warning system valve & transmitter with 4 different ID code range are used on one vehicle.
- Each tire pressure warning system valve & transmitter has a built-in semi-conductor to directly measure the inflation pressure of the tire.
- Frequency of the tire pressure warning system valve & transmitter is 314.98 MHz.

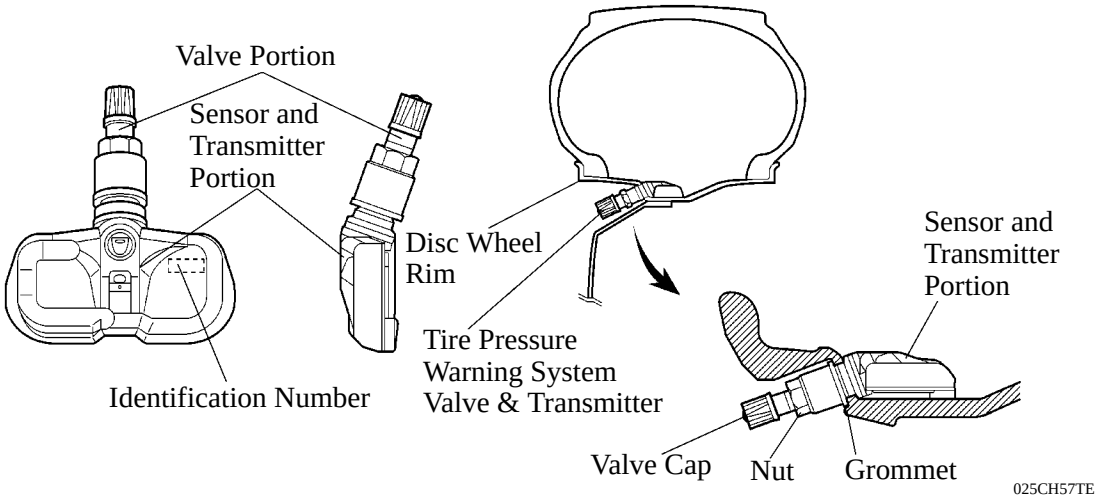

NOTICE

- Ensure the proper direction of the tire pressure warning system valve & transmitter by adhering to the prescribed procedure for installing a tire pressure warning system valve & transmitter on a wheel. Failure to do so could result in an incorrect measurement of the tire air inflation pressure.
- Make sure to replace the tires in accordance with the prescribed procedure. To prevent the tire pressure warning system valve & transmitter from damage, drop the tire pressure warning system valve & transmitter into the wheel before removing the tire. Failure to do so could damage the tire pressure warning system valve & transmitter.

For further details regarding the above, see the 2007 Camry Hybrid Vehicle Repair Manual (Pub. No RM02H0U).

Service Tip

- If the lithium battery is depleted, replace the entire tire pressure warning system valve & transmitter assembly.
- After a tire pressure warning system valve & transmitter has been replaced, the ID of the tire pressure warning system valve & transmitter must be registered in the ECU. To register an ID, use a hand-held tester to enter the ID code that is indicated on the sensor.
- When replacing the tire pressure warning system valve & transmitter, all the separate ID codes of the 4-tire pressure warning system valve & transmitter must be registered. Even if only 1 tire pressure warning system valve & transmitter is replaced, the ID codes of all 4 tire pressure warning valve & transmitter must be registered again.
- A new tire pressure warning system valve & transmitter that is available as a service part is in the sleep mode in its initial state, to prevent the battery from depleting. During PDS (Pre-Delivery Service), after the tire pressure warning system valve & transmitter and the tire are correctly mounted on the disc wheel, inflating the tire to the specified pressure causes the sleep mode to cancel.

For further details regarding the above, see the 2007 Camry Hybrid Vehicle Repair Manual (Pub. No. RM02H0U).

Downloaded from www.Manualslib.com manuals search engine

2. Tire Pressure Warning System Antenna & Receiver and Tire Pressure Warning System ECU

- The tire pressure warning system antenna & receiver, receives the radio wave signals from the tire pressure warning system valve & transmitter and transmits those signals to the tire pressure warning ECU.
- The tire pressure warning system antenna & receiver receives the tire inflation pressure data and sensor identification data.
- The tire pressure warning system antenna & receiver can determine from the received data whether the signals came from its own tires.

▶ Wiring Diagram ◀

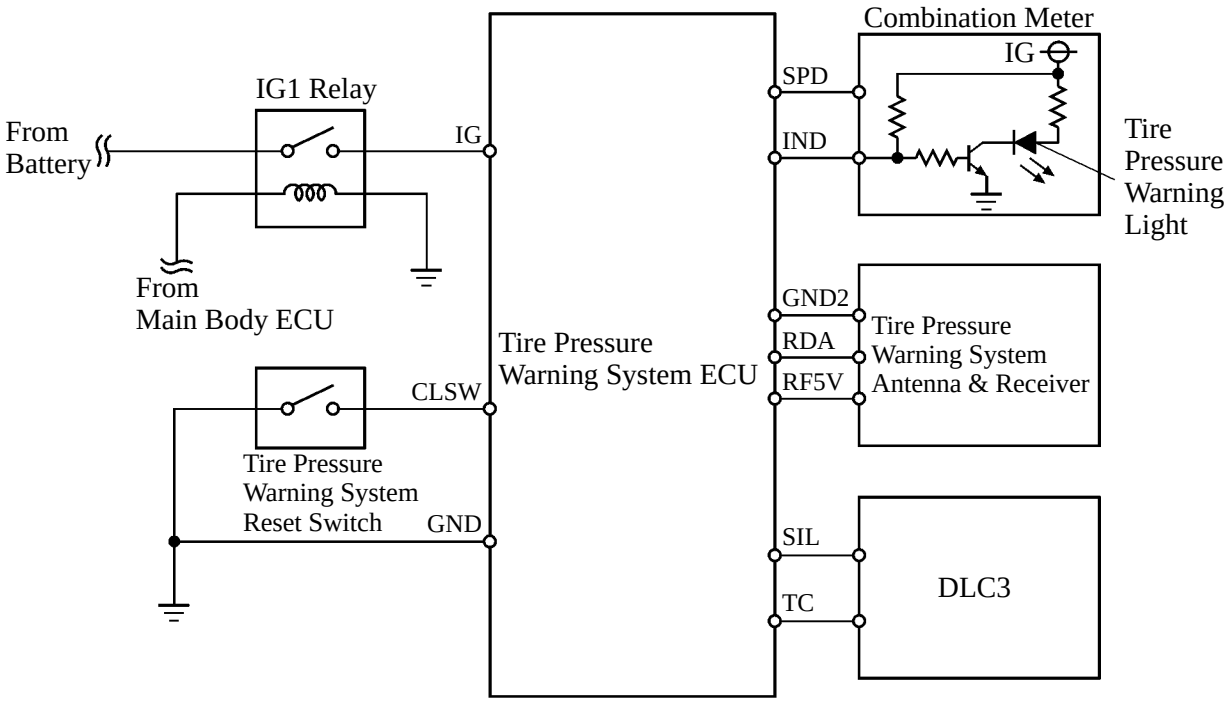

025CH61P

Downloaded from www.Manualslib.com manuals search engine

3. Tire Pressure Warning System Reset Switch

- By operating the tire pressure warning system reset switch, tire pressure warning system ECU can be set to issue a warning at an inflation pressure that corresponds with the type of tires. Therefore, the dealer must set the warning threshold to the proper value in order to comply with the local regulations.
- Operate the tire pressure warning system reset switch only after the inflation pressures of all 4 tires have been adjusted on the vehicle.
- To initialize the system, press and hold the tire pressure warning system reset switch for 3 seconds or longer with the power switch turned IG-ON. When starting the initialization, the tire pressure warning light blinks 3 times at 0.5 Hz.
- During the initialization, the tire pressure warning system valve & transmitter measures the inflation pressure of the tires, and registers the signals that are transmitted into the ECU at a frequency of 1 per minute. The initialization process is completed when the signals from the tires have been received.
- Once the tire pressure warning system reset switch has been pressed, turning OFF the power switch is not recommended for a few minutes.

Service Tip

- Since the initialized values are dependent upon the accuracy of the tire pressure gauge to be used, use a tire pressure gauge that has been properly calibrated.
- The system must be initialized in the following conditions:
  1) New vehicle delivery
  2) Replacement with tires of different size (inflation pressure)
  3) Tire pressure warning system ECU replacement

CAUTION

If the system is initialized with tires whose inflation pressure deviates from the threshold pressure, the system can be initialized at those values. Therefore, initialize only after the tires have been inflated to the specified air pressure.

4. Tire Pressure Warning Light

- The tire pressure warning light is located in the combination meter.
- This warning light illuminates or blinks in accordance with signals from the tire pressure warning system ECU if the vehicles own tires are inflated with low pressure or if malfunction occurs in the system.

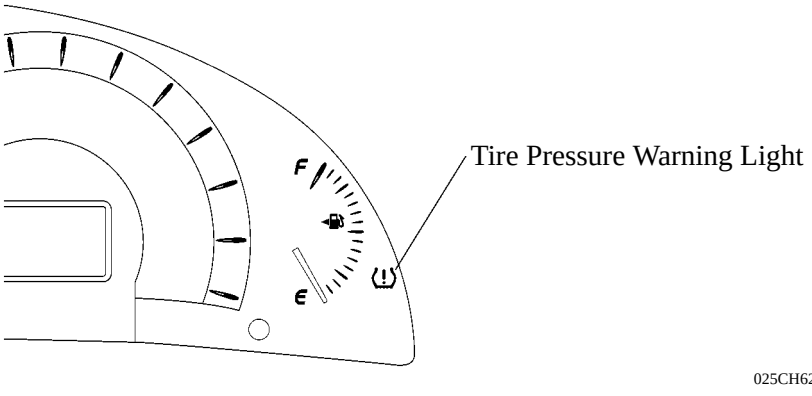

025CH62TE

Downloaded from www.Manualslib.com manuals search engine

5. Self-Diagnosis

If malfunctions are detected in the system, the tire pressure warning system ECU warns the driver by illuminating the tire pressure warning light after blinking it at 1 Hz intervals for 1 minute, and stores the DTC (Diagnostic Trouble Code) in the memory.
The DTC that are stored by the tire pressure warning system ECU can be accessed by connecting the SST (09843-18040) to the DLC3 terminals TC and CG, and reading the blinking of the tire pressure warning light. They can also be accessed by connecting a hand-held tester. The table below lists the DTC that pertain to this system. For further details, see the 2007 Camry Hybrid Vehicle Repair Manual (Pub No. RM02H0U).

Service Tip

After the DTC have been detected, it is necessary to identify the wheel that contains the faulty tire pressure warning system valve & transmitter. It can be identified by performing the operation in accordance with the prescribed procedure. For details, see the 2007 Camry Hybrid Vehicle Repair Manual (Pub. No. RM02H0U).

DTC No.	Detection Item	DTC Deletion Condition
C2111/11	Tire pressure warning system valve & transmitter ID1 operation stop (sleep mode)	When data is received from a transmitter with an ID code that is registered in the ECU, or the ID code of the tire pressure warning system valve & transmitter is newly registered in the ECU.
C2112/12	Tire pressure warning system valve & transmitter ID2 operation stop (sleep mode)	
C2113/13	Tire pressure warning system valve & transmitter ID3 operation stop (sleep mode)	
C2114/14	Tire pressure warning system valve & transmitter ID4 operation stop (sleep mode)	
C2121/21	Data from tire pressure warning system valve & transmitter registered to ID1 not received	When a DTC deletion operation is implemented or the ID code of the tire pressure warning valve & transmitter is newly registered in the ECU.
C2122/22	Data from tire pressure warning system valve & transmitter registered to ID2 not received	
C2123/23	Data from tire pressure warning system valve & transmitter registered to ID3 not received	
C2124/24	Data from tire pressure warning system valve & transmitter registered to ID4 not received	
C2141/41	A malfunction in the tire pressure warning system valve & transmitter registered to ID1	
C2142/42	A malfunction in the tire pressure warning system valve & transmitter registered to ID2	
C2143/43	A malfunction in the tire pressure warning system valve & transmitter registered to ID3	
C2144/44	A malfunction in the tire pressure warning system valve & transmitter registered to ID4	
C2165/65	Abnormal temperature inside ID1 tire	
C2166/66	Abnormal temperature inside ID2 tire	
C2167/67	Abnormal temperature inside ID3 tire	
C2168/68	Abnormal temperature inside ID4 tire	
C2171/71	Tire pressure sensor ID not registered	
C2176/76	Tire pressure warning system antenna & receiver is error	
C2177/77	Initialization incomplete	

(Continued)

Downloaded from www.Manualslib.com manuals search engine

DTC No.	Detection Item	DTC Deletion Condition
C2181/81	Data from tire pressure warning system valve & transmitter registered to ID1 not received (test diagnosis)	When deletion conditions of the ID codes have been established or departing from the test mode.
C2182/82	Data from tire pressure warning system valve & transmitter registered to ID2 not received (test diagnosis)	
C2183/83	Data from tire pressure warning system valve & transmitter registered to ID3 not received (test diagnosis)	
C2184/84	Data from tire pressure warning system valve & transmitter registered to ID4 not received (test diagnosis)	
C2191/91	Vehicle speed signal error (test diagnosis)	

Downloaded from www.Manualslib.com manuals search engine

STEERING

■DESCRIPTION

- The ’07 Camry Hybrid model uses a vehicle-speed sensing type EPS (Electric Power Steering) as standard equipment.
- A manual tilt and telescopic mechanism is used.
- The steering column uses an energy absorbing mechanism.
- An electrical steering lock system is used.

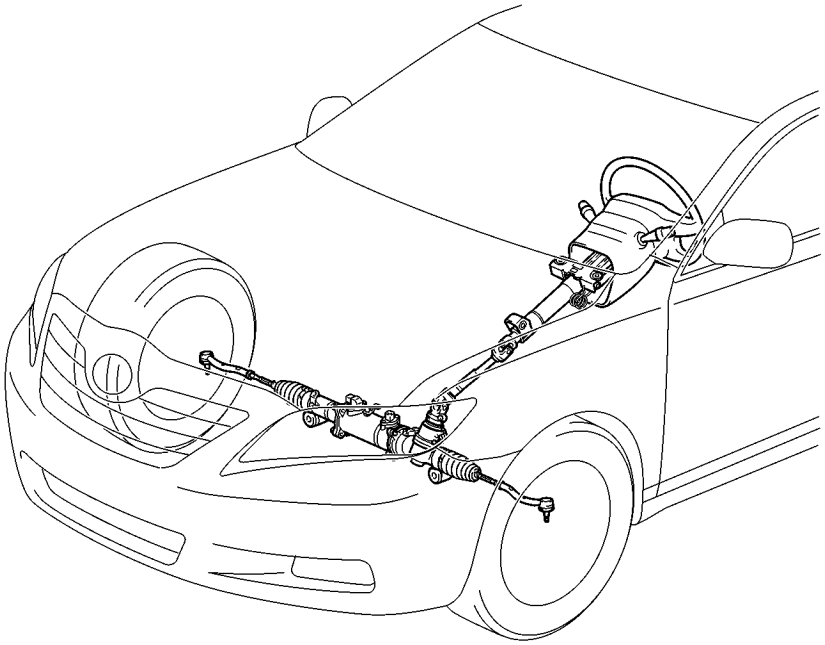

02HCH49Y

▶ Specifications ◀

Gear Ratio (Overall)	15.6
No. of Turns Lock to Lock	3.1
Rack Stroke mm (in.)	156.0 (6.14)

Downloaded from www.Manualslib.com manuals search engine

■EPS (Electric Power Steering)

1. General

- This system uses a motor and a reduction mechanism that are built into the steering gear housing to generate assist torque, in order to assist the driver's steering effort. The EPS ECU calculates the amount of power assist in accordance with the signals provided by the sensors and the ECUs.
- This system offers excellent fuel economy characteristics because the DC motor, which is built into the steering gear housing to provide power assist, consumes energy only when power assist is required.
- Unlike the conventional hydraulic power steering system, this system excels in serviceability because it does not require pipes, vane pump, pulley and power steering fluid.
- The '07 Camry Hybrid model uses a VDIM (Vehicle Dynamics Integrated Management) to effect the total control of the vehicle. As a result, the brake system and the EPS system effect cooperative control. The EPS ECU controls the assist torque of the motor upon receiving an assist torque demand signal from the skid control ECU.

For details on the VDIM, see the Brake Control System on page CH-25.

▶ System Diagram ◀

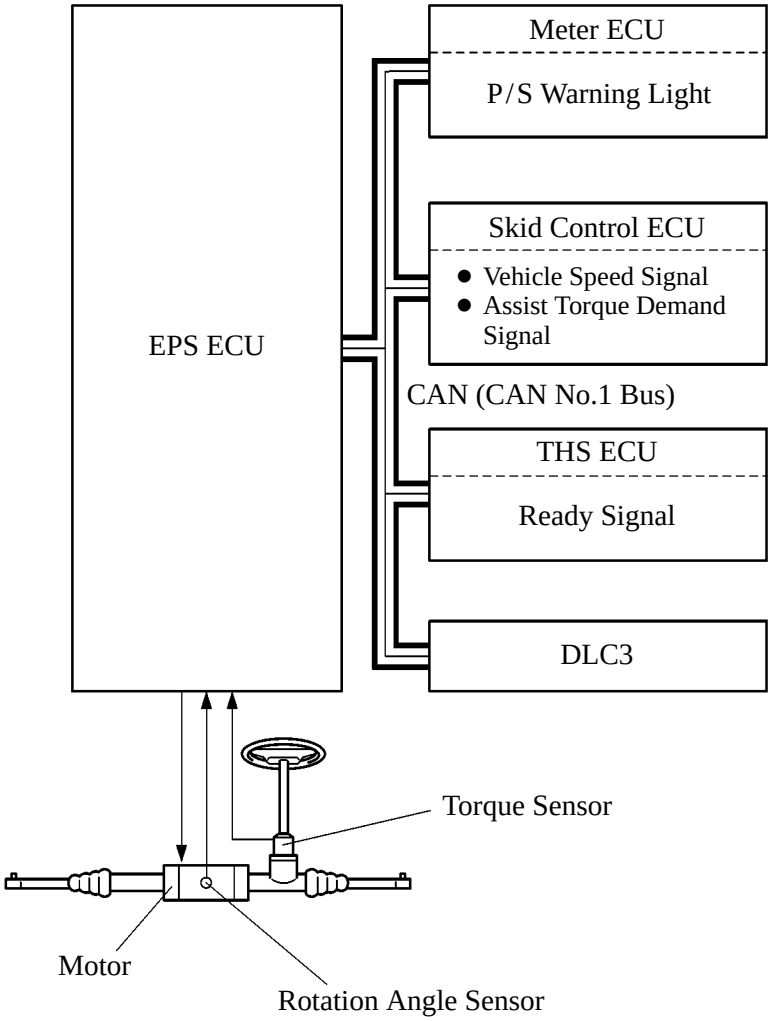

02HCH50TE

Downloaded from www.Manualslib.com manuals search engine

2. Layout of Main Components

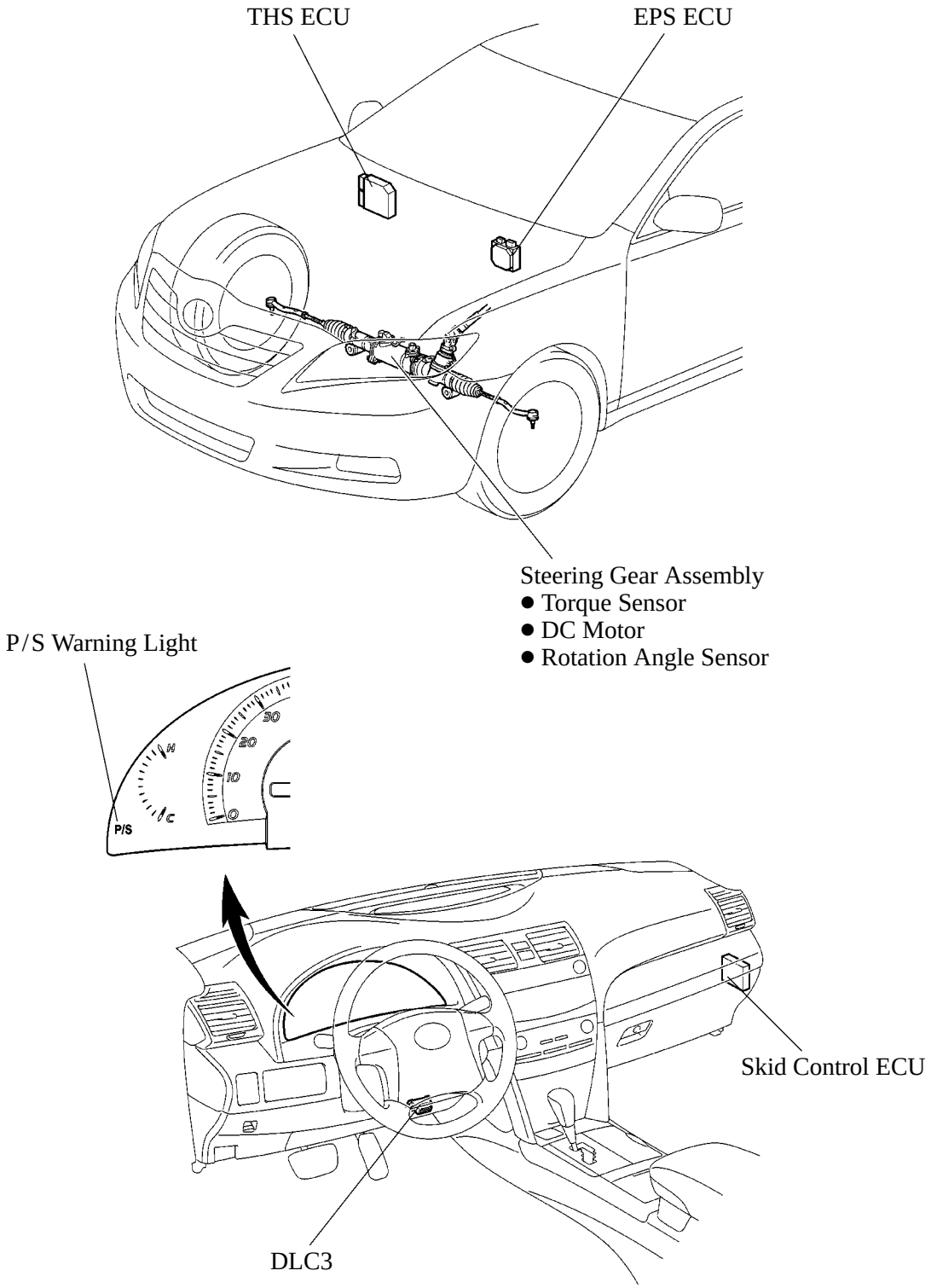

Downloaded from www.Manualslib.com manuals search engine

3. Function of Main Components

Components		Function
Steering Gear Unit	Torque Sensor	Detects the twist of the torsion bar with this, it calculates the torque that is applied to the torsion bar by changing it into an electrical signal, and outputs this signal to the EPS ECU.
	Motor	Generates power assist in accordance with a signal received from the EPS ECU.
	Reduction Mechanism	Uses a screw mechanism to reduce the speed through a ball screw reduction gear and a rack shaft gear, as well as to convert the rotational movement to a linear movement.
	Rotation Angle Sensor	Outputs the rotation angle of the motor to the EPS ECU.
EPS ECU		In accordance with the signals received from various sensors and the skid control ECU, the EPS ECU operates the motor in the steering gear unit for the purpose of providing power assist.
THS ECU		Transmits a READY signal to the EPS ECU, in order to inform the EPS system that it is ready to generate electricity.
Skid Control ECU		● Vehicle speed signal is outputted to EPS ECU. ● When VDIM function is operating, the skid control ECU transmits an additional torque signal (which it has calculated in accordance with the signals from the sensors for the purpose of effecting cooperative control) to the EPS ECU.
Meter ECU		Upon receiving a signal from the EPS ECU in the event of a system malfunction, the meter ECU illuminates the P/S warning light.

Downloaded from www.Manualslib.com manuals search engine

4. Constructions and Operation

Steering Gear Unit

1) General

A motor, reduction mechanism, and the torque sensor are enclosed in the steering gear unit.

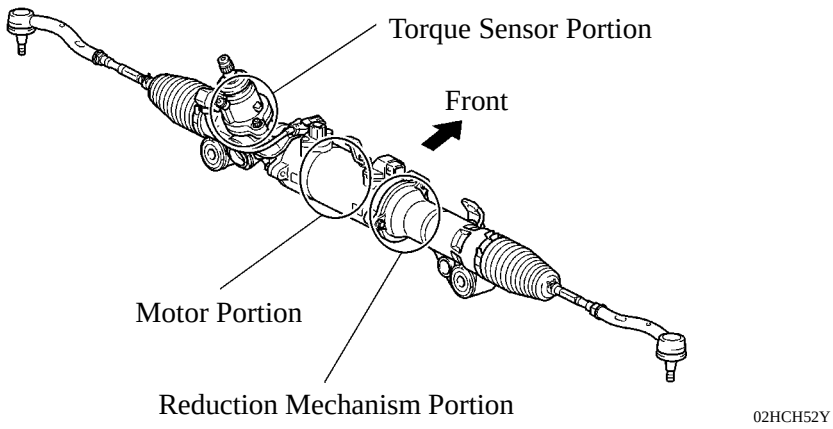

2) Motor

- The motor is a high power output, brush less type motor is used.
- The motor, which is mounted coaxially to the rack shaft, consists of a rotation angle sensor, stator, and rotor.
- A ball screw reduction gear, which consists of a reduction mechanism, is installed on the rotor.
- The balls transmit the rotational torque of the motor to the rack shaft in the form of axial force.
- The rotation angle sensor consists of resolver sensors, which excel in reliability and durability. The rotation angle sensor detects the rotation angle of the motor and outputs it to the EPS ECU. As a result, it ensures efficient EPS control.

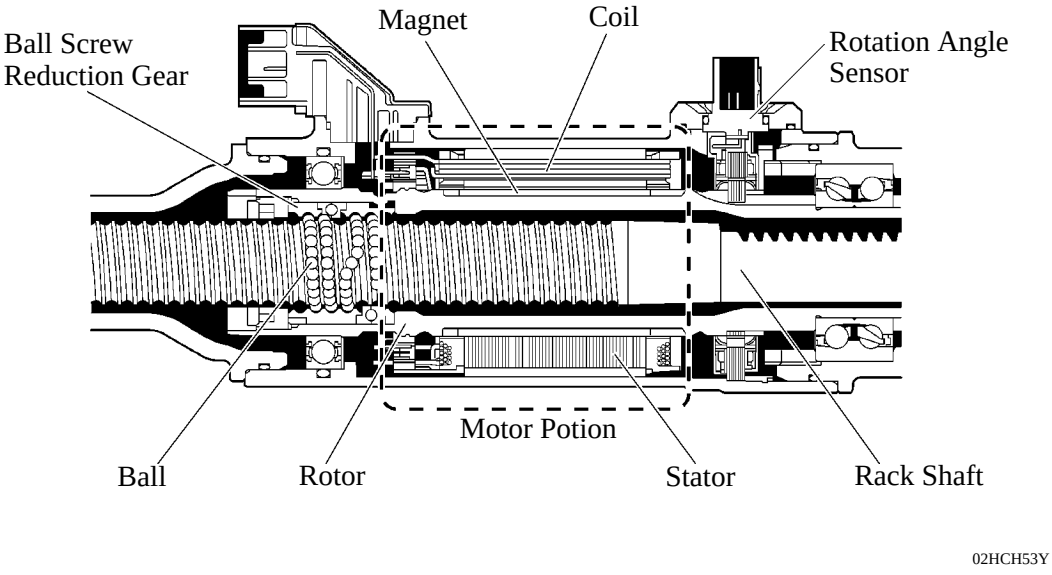

Downloaded from www.Manualslib.com manuals search engine

3) Reduction Mechanism

- The reduction mechanism consists of a high-precision rolled ball thread with a smooth surface, which realizes high efficiency and low noise.
- The ball screw reduction gear has four ball directors, and is fixed to the rotor.
- By the ball director, the ball is circulated endlessly the inside of the ball screw reduction gear.
- The motor operates to rotate the rotor. Then, the rotational torque of the motor travels from the ball screw reduction gear via the balls, thus transmitting a direct axial force to the rack shaft.

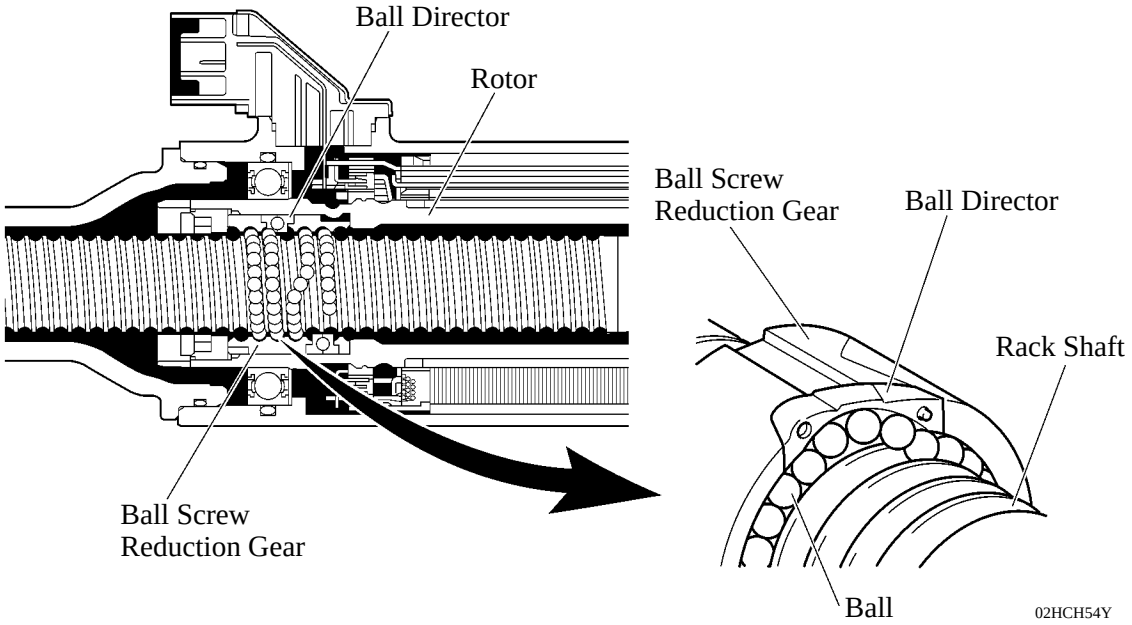

4) Torque Sensor

a. General

The torque sensor consists of two resolvers, a torsion bar, main shaft (input shaft), and pinion shaft (output shaft).
The two resolvers for the torque sensor are mounted to the main shaft (input shaft) and the pinion shaft (output shaft) respectively, which are coupled with the torsion bar. This construction generates a relative angle difference that is equivalent to the twisting of the torsion bar. When the driver turns the steering wheel, this difference is created between the angle that the main shaft (input shaft) transmits to the resolver 1 and the angle that the pinion shaft (output shaft) transmits to the resolver 2.

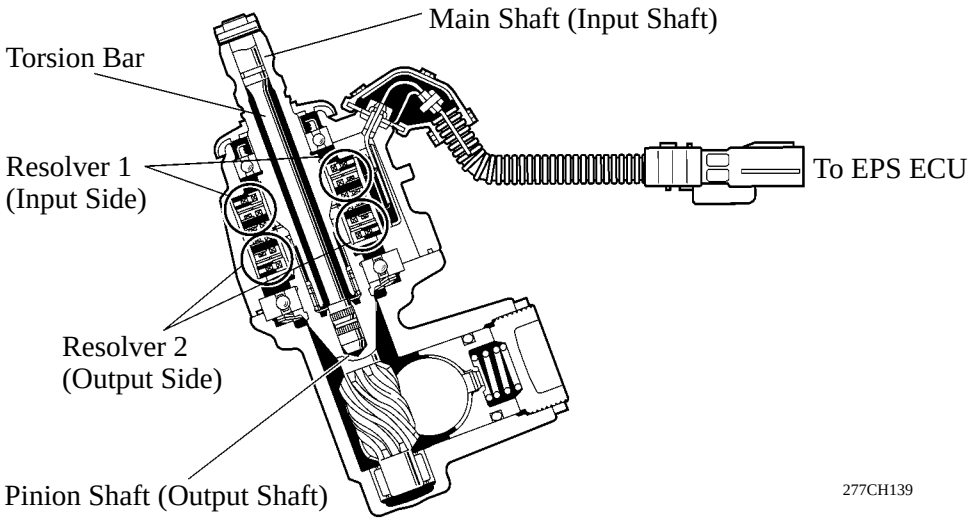

Downloaded from www.Manualslib.com manuals search engine

b. Torque Sensor Operation

i) Straight-line Driving

If the vehicle is driven straight and the driver dose not turn the steering wheel, the specified voltage that is output at this time is determined by the ECU to indicate the neutral position of the steering. Therefore, it dose not apply current to the motor.

ii) When Steering

When the driver turns the steering wheel, a relative angle difference is created between the rotor portions of the resolvers 1 and 2, only in the amount that is equivalent to the twisting of the torsion bar. The stator portions of the resolvers 1 and 2 receive the angles of the rotors in the form of electric signals and output them to the EPS ECU. Based on these input signals, the EPS ECU calculates the relative angle difference between the angles detected by the two resolvers. The EPS ECU calculates the torque value based on that difference. Then, the EPS ECU calculates the assist current based on the calculated torque value and vehicle speed. Based on the information obtained from the rotation angle sensor, the EPS ECU actuates the motor at a predetermined current.

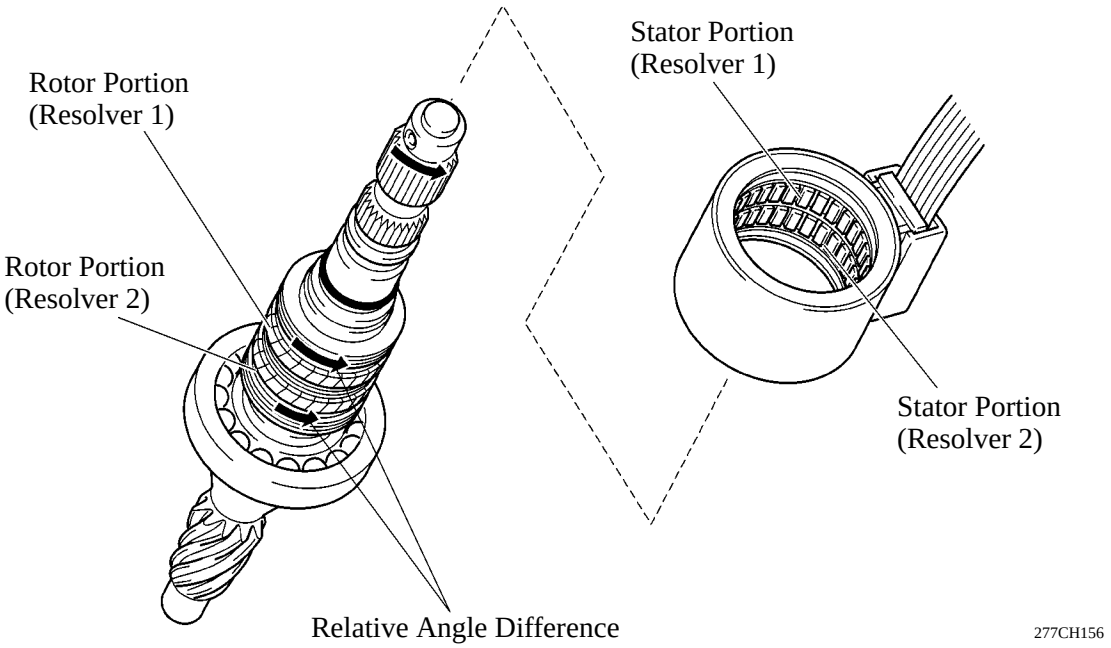

▶ Torque Sensor Output Image Diagram ◀

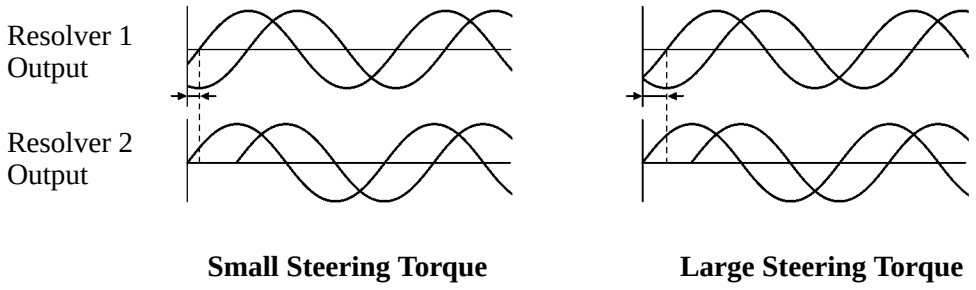

Downloaded from www.Manualslib.com manuals search engine

5. EPS ECU

1) General

- The EPS ECU receives signals from various sensors, judges the current vehicle condition, and determines the assist current to be applied to the motor accordingly.
- The diagram on the right describes the relationship between the steering torque and the assist power current output.

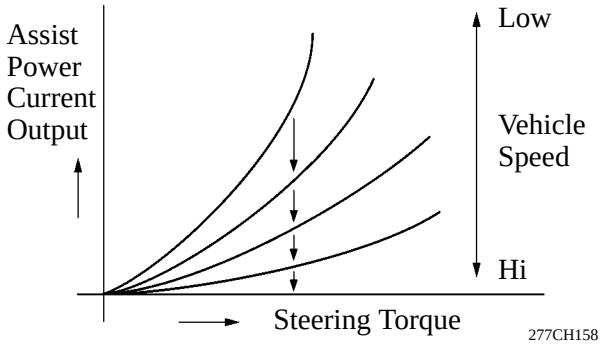

- The EPS ECU of ’07 Camry Hybrid model has a following function:

Item	Function
Basic Control	Calculates the assist current from the steering torque value and the vehicle speed, and actuates the motor.
Inertia Compensation Control	Improves the starting movement of the motor when the driver starts to turn the steering wheel.
Recovery Control	During the short interval between the time the driver fully turns the steering wheel and the wheels try to recover, this control assists the recovery force.
Damper Control	Regulates the amount of assist when the driver turns the steering wheel while driving at high speeds, thus damping the changes in the yaw rate of the vehicle body.
Voltage Boost Control	Boosts the battery voltage in the EPS ECU. It maintains 0 volts when the driver does not turn the steering wheel or the vehicle is being driven straight. It effects variable control between 27 to 34 volts in accordance with the load, when the driver is turning the steering wheel.
System Overheat Protection Control	Estimates the motor temperature based on the amperage and the current duration. If the temperature exceeds the standard, it limits the amperage to prevent the motor from overheating.

- The EPS ECU effects cooperative control with the skid control ECU, in order to control the steering assist torque in accordance with information received from the skid control ECU. This facilitates the steering operation of the driver, thus realizing a high level of vehicle stability.
- For an outline of Power Steering Cooperative Control Function, see page CH-30.

2) Diagnosis

- If the EPS ECU detects a problem in the EPS system, the P/S warning light that corresponds to the function in which the malfunction has been detected light up to alert the driver of the malfunction.
- At the same time, the DTC (Diagnosis Trouble Code) are stored in memory. The DTC can be accessed by using the hand-held tester with CAN VIM (dedicated adapter).
- For details of the DTC that are stored in EPS ECU memory, see the 2007 Camry Hybrid Vehicle Repair Manual (Pub. No. RM02H0U).

3) Fail-Safe

- If the EPS ECU detects a malfunction in the EPS system, it turns on the P/S warning light in the combination meter to inform the driver and stops the assist control. As a result, the EPS system operates in the same manner as manual steering.
- In case of a malfunction, the fail-safe function activates and the ECU effects various controls. For details, see the 2007 Camry Hybrid Vehicle Repair Manual (Pub. No. RM02H0U).

Downloaded from www.Manualslib.com manuals search engine

■STEERING COLUMN

1. Tilt and Telescopic Steering Column

- The manual tilt and telescopic mechanism mainly consists of a tilt lever, steering column tube, breakaway bracket, tilt lever lock bolt, and tilt steering stoppers.
- The tilt lever controls the tilt and the telescope motion.
- With the tilt adjustment range of 3.2° (stepless) and the telescopic adjustment range of 40 mm (1.57 in.), the steering column can be adjusted to a position selected by the driver.
- When the tilt and telescopic mechanism is in its locked state, the tilt lever at B position causes the cam of the tilt steering stoppers to tighten the steering column tube.
- When the tilt and telescopic mechanism is in its free state, the tilt lever at A position causes the cam of the tilt steering stoppers to loosen the steering column tube.

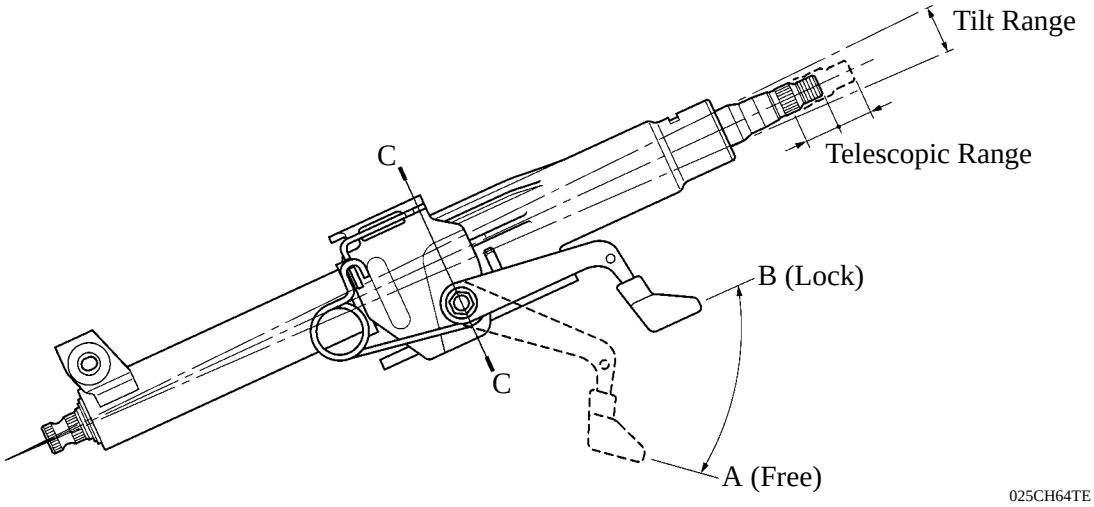

▶ C - C Cross Section ◀

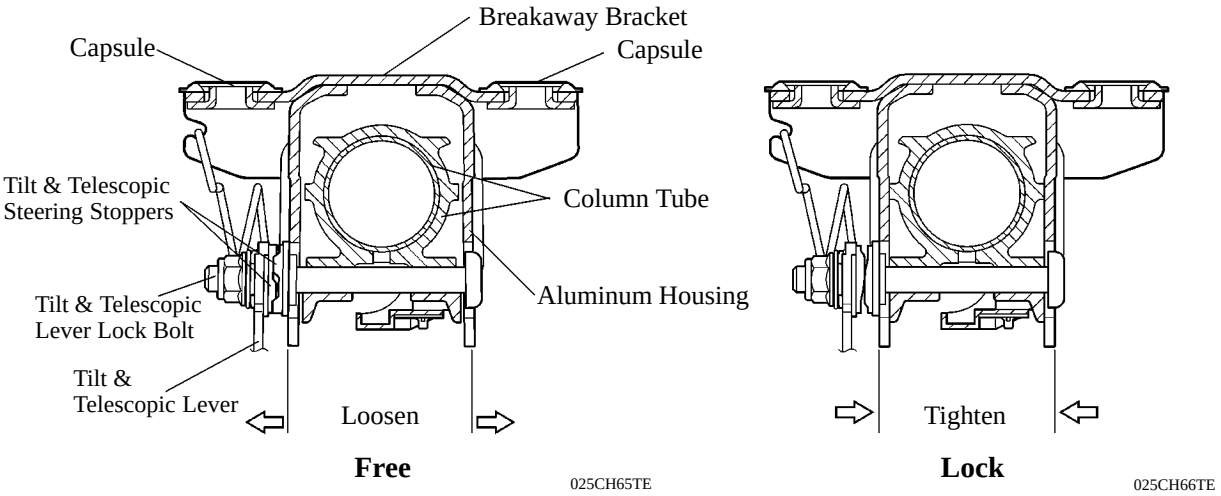

Downloaded from www.Manualslib.com manuals search engine

2. Energy Absorbing Mechanism

Construction

- The steering column has three energy absorbing mechanisms.
- The intermediate shaft and the main shaft are joined by a serrated engagement of fine vertical teeth. Energy is absorbed by the contraction of the engagement.
- The breakaway bracket is bolted to the instrument panel reinforcement via a capsule. The breakaway bracket and the capsule are held with the washer. When, due to the column tube contraction, the breakaway bracket separates from the capsule, energy is absorbed by the friction resistance generated.
- The contraction mechanism of the steering column tube absorbs energy by the frictional resistance caused by the inner tube and the outer tube.

Operation

When the steering gear box moves during a (primary) collision, the intermediate shaft contracts, thus reducing the chance that the steering column and the steering wheel protrude further into the cabin.
When an impact is transmitted to the steering wheel in a (secondary) collision, the steering wheel and the driver's airbag help absorb the impact. In addition, the breakaway bracket separates, and the column tube contracts. This sequential energy absorbing mechanism helps absorb the impact of the secondary collision.

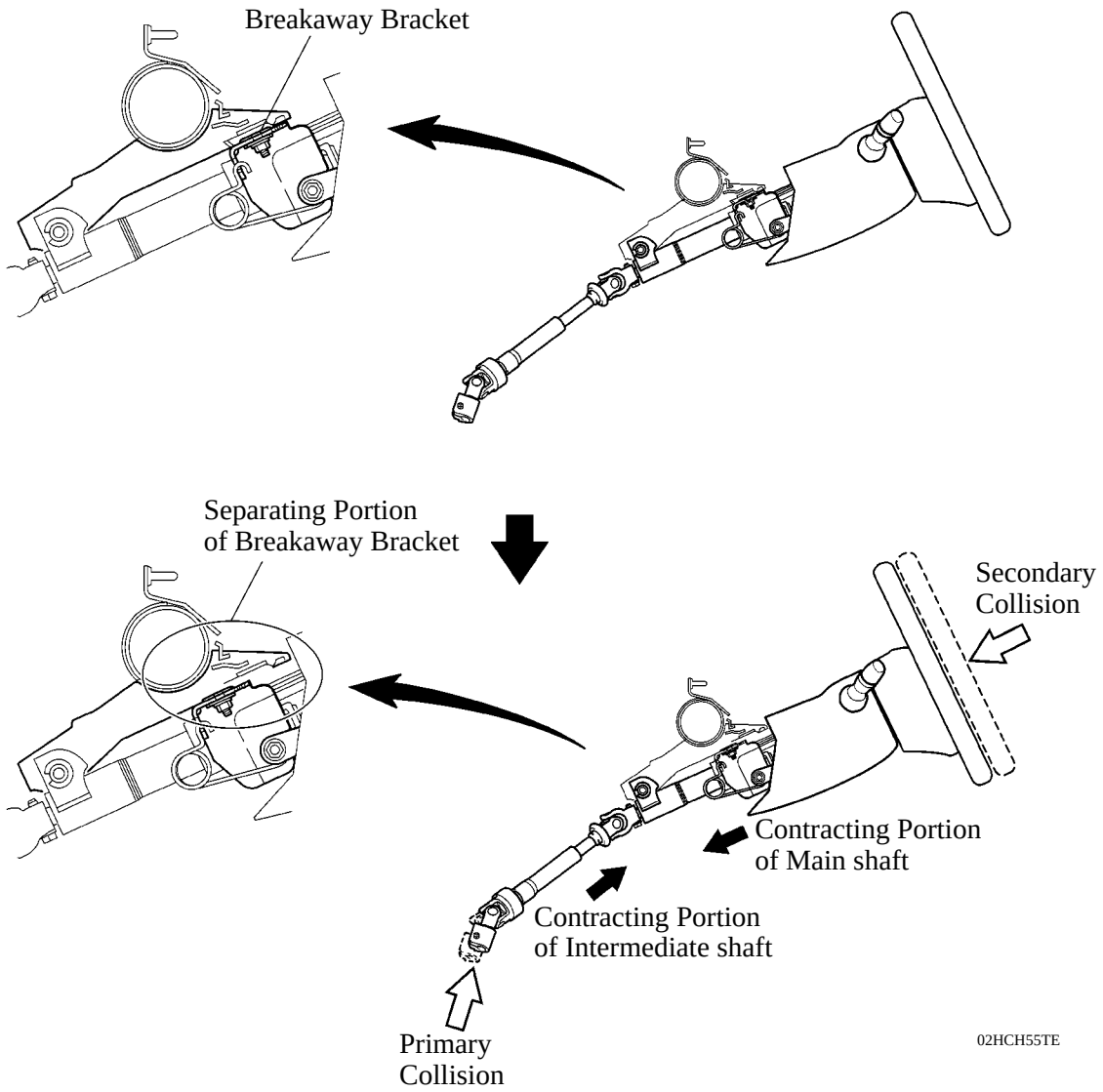

Downloaded from www.Manualslib.com manuals search engine

■STEERING LOCK SYSTEM

- According with the use of the smart key system, a steering lock system which uses a lock/unlock motor to lock and unlock the steering wheel is used. This system mainly consists of the steering lock assembly, main body ECU, certification ECU and ID code box.
- The steering lock ECU is integrated in the steering lock assembly, and it controls the lock bar operation in the steering lock assembly through the control of lock/unlock motor.
- The steering lock ECU detects the position (lock/unlock) of the lock bar and transmits this information to the main body ECU and certification ECU.
- In this system, the certification ECU determines whether to lock or unlock the steering based on communication with the main body ECU. Then, the certification ECU sends lock or unlock command signals to the steering lock ECU through the ID code box. Upon receiving the signals, the steering lock ECU operates the lock/unlock motor to lock or unlock the steering. For details, see page BE-88.

▶ System Diagram ◀

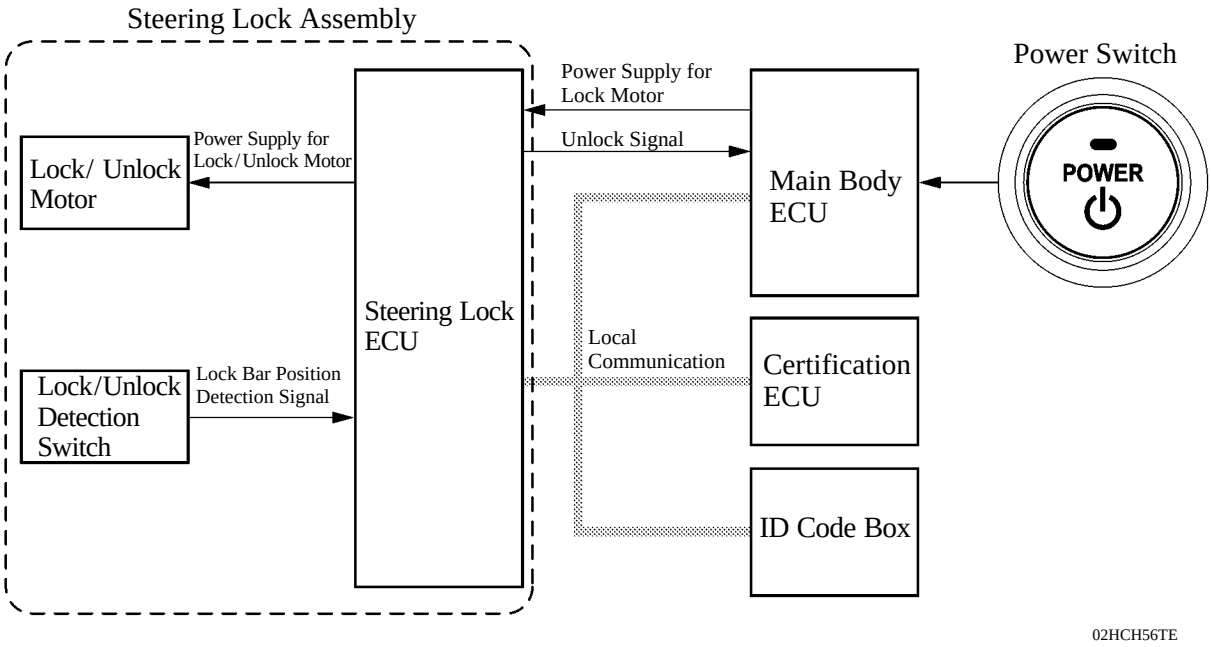

Service Tip

It is not possible to replace only the steering lock ECU in the steering lock assembly. Therefore, if a malfunction occurs in the ECU, the entire steering lock assembly must be replaced.

Downloaded from www.Manualslib.com manuals search engine

ENGINE

2AZ-FXE ENGINE

■DESCRIPTION

- The ’07 Camry Hybrid model uses the 2AZ-FXE engine that has been newly developed for hybrid system application. Based on the 2AZ-FE engine, the high-expansion ratio Atkinson cycle is used. It is an in-line 4-cylinder, 2.4-liter, 16-valve DOHC engine.
- This engine uses the VVT-i (Variable Valve Timing-intelligent) system, DIS (Direct Ignition System), ETCS-i (Electronic Throttle Control System-intelligent) and fuel vapor-containment system.
  These control functions achieve improved engine performance, fuel economy, and reduced exhaust emissions.

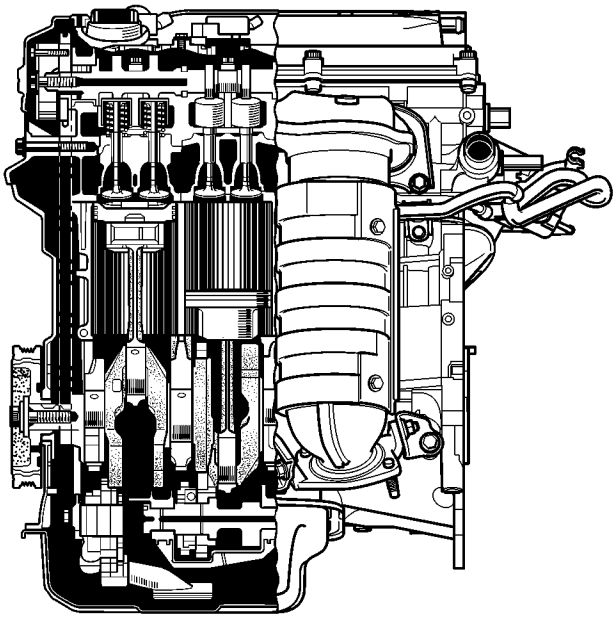

02HEG01TE

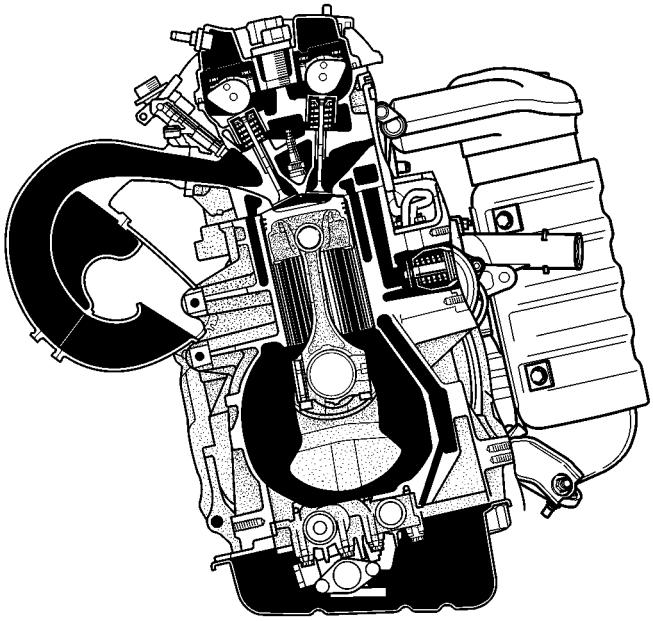

02HEG02TE

Downloaded from www.Manualslib.com manuals search engine

▶ Engine Specifications ◀

Model			'07 Camry Hybrid Model		'07 Camry (For California)	'07 Camry (Except California)
Engine Type			2AZ-FXE		2AZ-FE	←
No. of Cyls. & Arrangement			4-Cylinder, In-line		←	←
Valve Mechanism			16-Valve DOHC, Chain Drive (with VVT-i)		←	←
Combustion Chamber			Pentroof Type		←	←
Manifolds			Cross-Flow		←	←
Fuel System			SFI		←	←
Ignition System			DIS		←	←
Displacement cm^3 (cu. in.)			2362 (144.2)		←	←
Bore x Stroke mm (in.)			88.5 x 96.0 (3.48 x 3.78)		←	←
Compression Ratio			12.5 : 1		9.8 : 1	←
Max. Output (SAE-NET)*1			110 kW @ 6000 rpm (147HP @ 6000 rpm)		116 kW @ 6000 rpm (155HP @ 6000 rpm)	118 kW @ 6000 rpm (158HP @ 6000 rpm)
Max. Torque (SAE-NET)*1			187 N·m @ 4400 rpm (138 ft·lbf @ 4400 rpm)		214 N·m @ 4000 rpm (158 ft·lbf @ 4000 rpm)	218 N·m @ 4000 rpm (161 ft·lbf @ 4000 rpm)
Valve Timing	Intake	Open	0° ~ 30° BTDC		3° ~ 43° BTDC	←
		Close	100° ~ 70° ABDC		65° ~ 25° ABDC	←
	Exhaust	Open	45° BBDC		←	←
		Close	3° ATDC		←	←
Firing Order			1 - 3 - 4 - 2		←	←
Oil Grade			ILSAC		←	←
Octane Rating			87 or more		←	←
Emission Regulation			AT-PZEV (CARB*3)	Tier2 (EPA*4)	PZEV (CARB*3)	Tier2 (EPA*4)
		Tailpipe	LEVII-SULEV, SFTP	Tier2-Bin3, SFTP	LEVII-SULEV, SFTP	Tier2-Bin5, SFTP
		Evaporative	LEVII-Zero Evapo, ORVR	Tier2, ORVR	LEVII-Zero Evapo, ORVR	Tier2, ORVR
Engine Service Mass*2 (Reference) kg (lb)			126 (278)		130 (287)	←

*1: Maximum output and torque rating is determined by revised SAE J1394 standard.
*2: Weight shows the figure with the oil and engine coolant fully filled.
*3: CARB (California Air Resources Board)
*4: EPA (Environmental Protection Agency)

▶ Valve Timing ◀

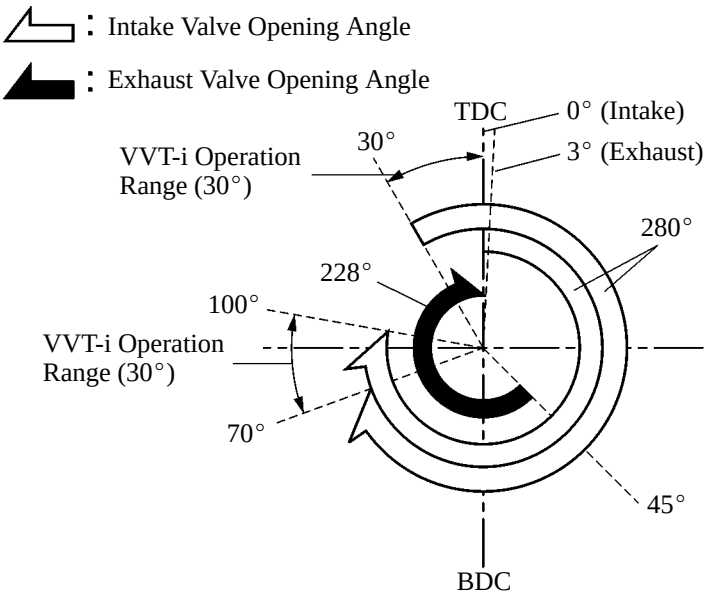

Downloaded from www.Manualslib.com manuals search engine

■MAJOR DIFFERENCE

The major differences between the 2AZ-FXE engine on the ’07 Camry Hybrid model and the 2AZ-FE engine on the ’07 Camry (except California package model) are as follows:

System	Features
Engine Proper	The piston shape has been changed.
Valve Mechanism	● The intake valve close timing has been retarded. ● The amount of intake valve lift has been changed. (10 mm/0.39 in. → 8.1 mm/0.32 in.)
Cooling System	● The cooling fan motor output has been changed. (80 W + 80 W → 120 W + 120 W) ● A V-ribbed belt is used to drive the water pump. ● Due to the introduction of an electric water pump for the air conditioning, the coolant piping and coolant hose routing have been changed.
Intake and Exhaust System	● The capacity of the TWC (Three-Way Catalytic Converter) has been optimized. ● A double wall structure compact exhaust manifold is used.
Fuel System	● A fuel vapor-containment system is used. ● A fuel tank made of steel sheet, which is pressure resistant, is used.
Charging System	The use of the generator has been discontinued.
Starting System	The use of the starter has been discontinued. The starting system uses a motor generator (MG1).
Engine Control System	● The THS ECU, which incorporates engine control and THS II control, is used. ● The operating range of the VVT-i system has been changed. (40° → 30°) ● Due to the introduction of the fuel vapor-containment system, the evaporative emission control has been changed.

Downloaded from www.Manualslib.com manuals search engine

■FEATURES OF 2AZ-FXE ENGINE

The 2AZ-FXE engine has achieved the following performance through the use of the items listed below.

(1) High performance and reliability

(2) Low noise and vibration

(3) Lightweight and compact design

(4) Good serviceability

(5) Clean emission and fuel economy

Item		(1)	(2)	(3)	(4)	(5)
Description	High-expansion Atkinson cycle is used.					○
Engine Proper	A head cover made of magnesium is used.				○	
	A taper squish shape is used for the piston head.	○				○
	A cylinder block made of aluminum alloy is used.			○		
	A resin gear balance shaft is used.		○	○		
Valve Mechanism	The VVT-i system is used.	○				○
	A timing chain and chain tensioner are used.		○	○	○	
Cooling System	The engine coolant is used the TOYOTA Genuine SLLC (Super Long Life Coolant).				○	
Intake and Exhaust System	The link-less type throttle body is used.			○	○	
	The intake manifold made of plastic is used.			○		
	The double wall structure compact exhaust manifold is used.					○
	A 2-way exhaust control system is used.	○	○			
	A ceramic type TWC is used.					○
Fuel System	Fuel vapor-containment system is used.					○
	The fuel returnless system is used.			○	○	○
	12-hole type fuel injectors with high atomizing performance are used.	○				○
	Quick connectors are used to connect the fuel hose with the fuel pipe.				○	
Ignition System	The DIS (Direct Ignition System) makes ignition timing adjustment unnecessary.	○			○	○
	Iridium-tipped spark plugs are used.	○			○	
Engine Control System	The ETCS-i is used.	○				○
	Evaporative emission control system is used.					○

Downloaded from www.Manualslib.com manuals search engine

■ENGINE PROPER

1. Cylinder Head Cover

- A lightweight magnesium alloy diecast cylinder head cover used.
- The cylinder head cover gasket and the spark plug gasket have been integrated to reduce the number of parts.

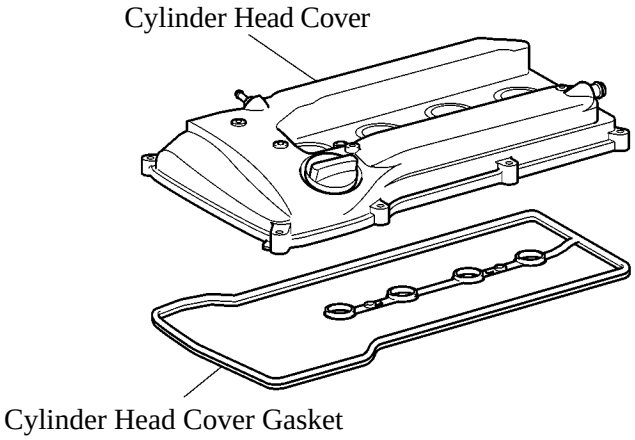

185EG35

2. Cylinder Head Gasket

A steel-laminate type cylinder head gasket is used. A shim has been added around the cylinder bore to increase the sealing surface, thus improving the sealing performance and durability.

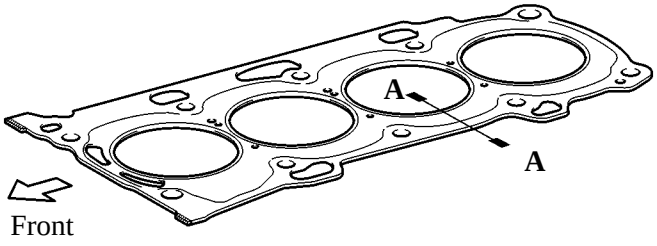

02AEG01Y

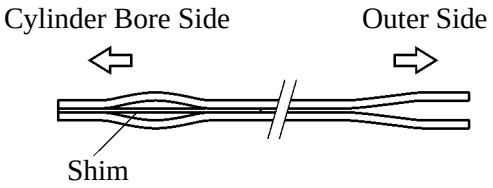

A - A Cross Section

02AEG02Y

Downloaded from www.Manualslib.com manuals search engine

3. Cylinder Head

- The taper squish combustion chamber is used to realize the engine's knocking resistance and fuel efficiency.
- An upright intake port has been used to achieve a highly efficient intake.
- Installing the injectors in the cylinder head enables the injectors to inject fuel as close as possible to the combustion chamber. This prevents the fuel from adhering to the intake port walls, which reduces HC exhaust emissions.
- The routing of the water bypass jacket in the cylinder head has been optimized for improved cooling performance. In addition, a water bypass passage has been provided below the exhaust ports to reduce the number of parts and to achieve weight reduction.

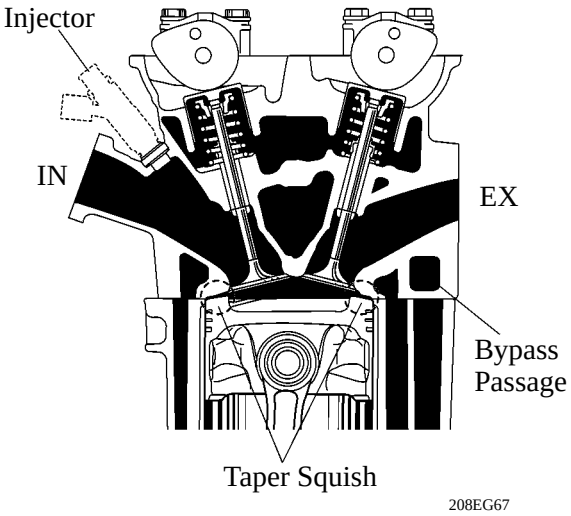

A - A Cross Section

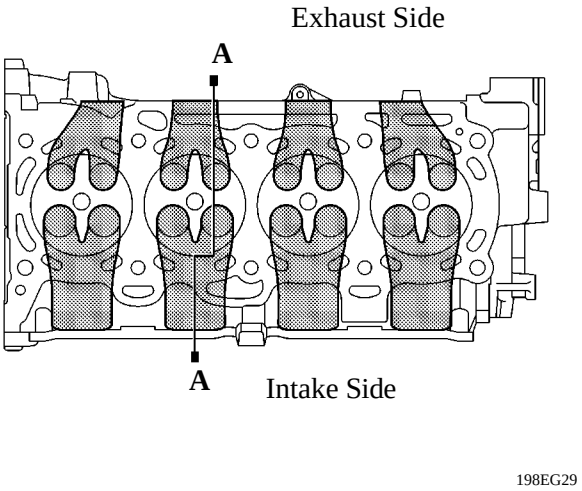

View from the Back Side

Downloaded from www.Manualslib.com manuals search engine

4. Cylinder Block

- Lightweight aluminum alloy is used for the cylinder block.
- By producing the thin cast-iron liners and cylinder block as a unit, compaction is realized.
- Air passage holes are provided in the crankshaft bearing area of the cylinder block. As a result, the air at the bottom of the cylinder flows smoother, and pumping loss (back pressure at the bottom of the piston generated by the piston's reciprocal movement) is reduced to improve the engine's output.
- The oil filter and the air conditioning compressor brackets are integrated into the crankcase. Also, the water pump swirl chamber and thermostat housing are integrated into the cylinder block.

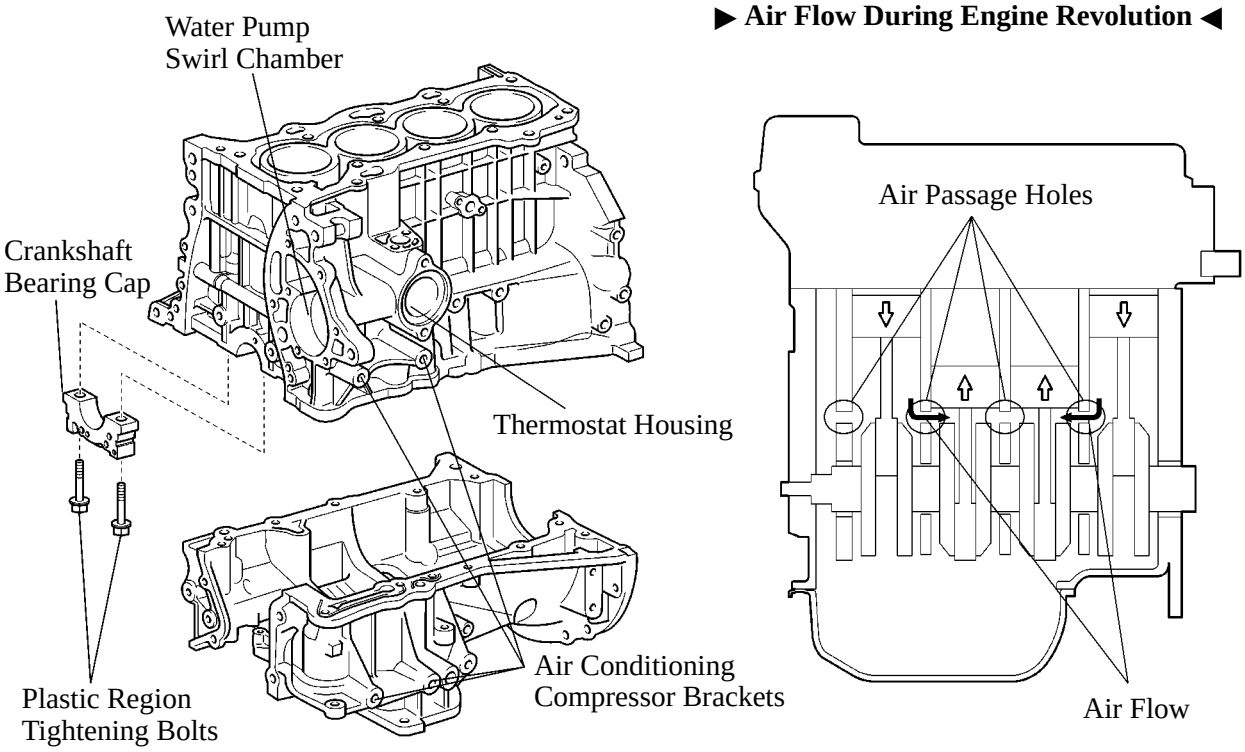

NOTICE

Never attempt to machine the cylinder because it has a thin liner thickness.

Downloaded from www.Manualslib.com manuals search engine

- The liners are the spiny-type which have been manufactured so that their casting exteriors form large irregular surfaces in order to enhance the adhesion between the liners and the aluminum cylinder block. The enhanced adhesion helps heat dissipation, resulting in a lower overall temperature and heat deformation of the cylinder bores.

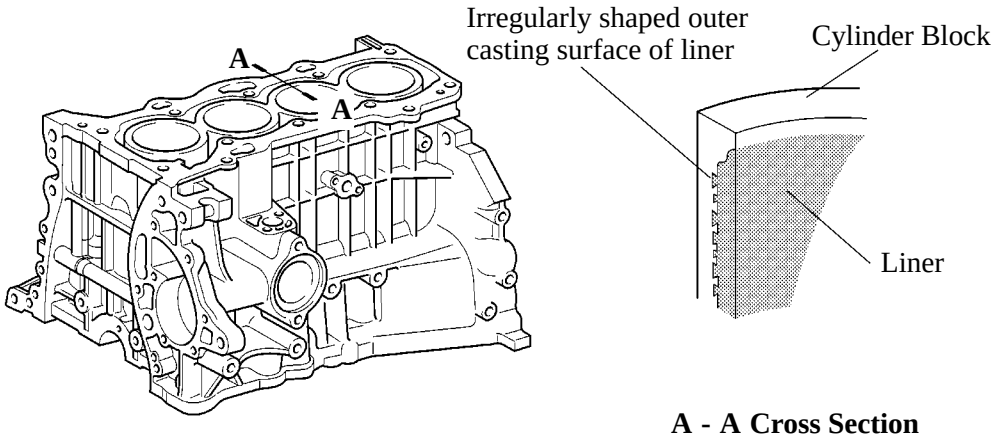

01NEG27Y

- Water jacket spacers are provided in the water jacket of the cylinder block. They suppress the water flow in the center of the water jackets, guide the coolant above and below the cylinder bores, and ensure uniform temperature distribution. As a result, the viscosity of the engine oil that acts as a lubricant between the bore walls and the pistons can be lowered, thus reducing friction.

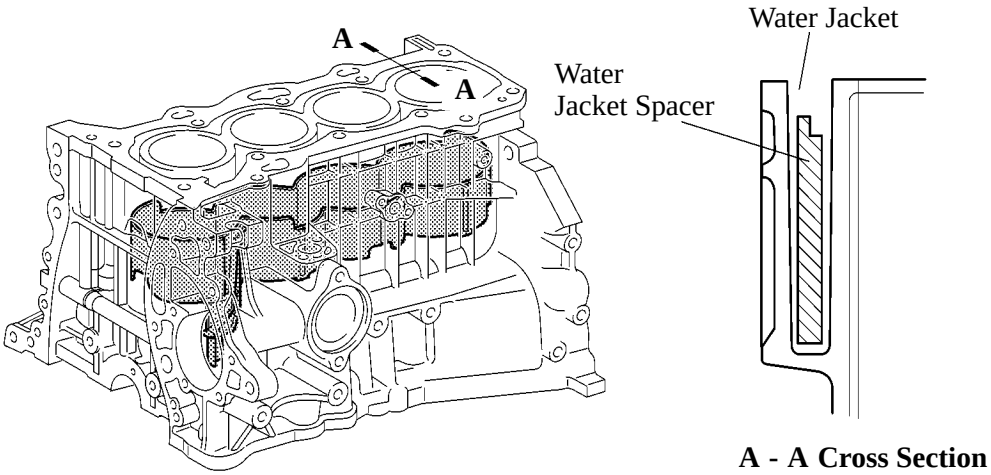

01NEG28Y

Downloaded from www.Manualslib.com manuals search engine

5. Piston

- The piston shape has been changed from that of the ’07 Camry with 2AZ-FE engine to increase the compression ratio (9.8 → 12.5) and achieve the high-expansion ratio Atkinson cycle.
- The piston is made of aluminum alloy and the skirt area is compact and lightweight.
- The piston head portion has a taper squish shape.
- The piston skirt has been coated with resin.
- Full floating type piston pins are used.
- By increasing the machining precision of the cylinder bore diameter, the outer diameters of the pistons have been made uniform.

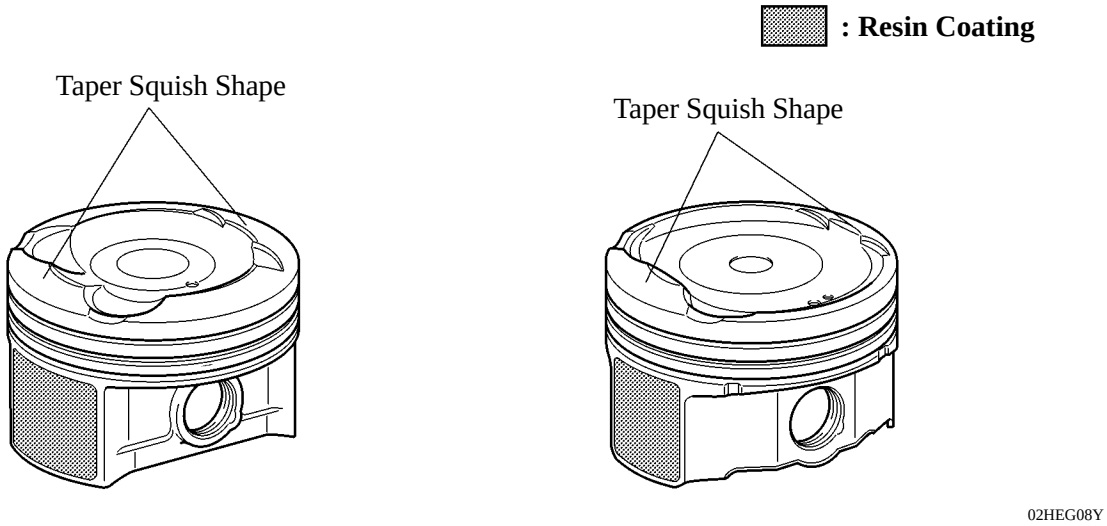

2AZ-FXE Engine **2AZ-FE Engine**

6. Connecting Rod

- The connecting rods and caps are made of high strength steel for weight reduction.
- Nutless-type plastic region tightening bolts are used for the connecting rods for a lighter design.

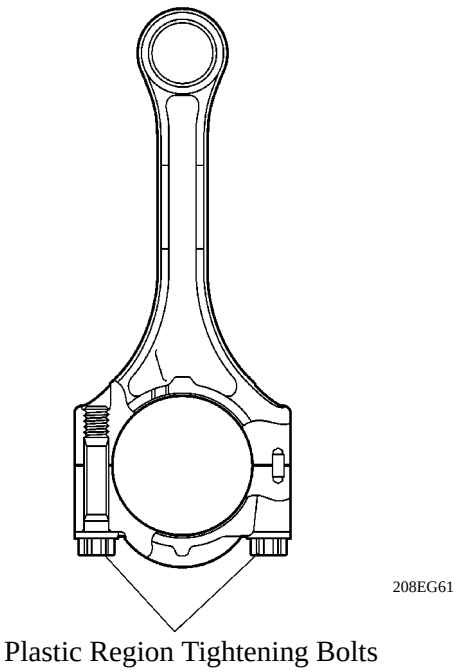

Downloaded from www.Manualslib.com manuals search engine

7. Crankshaft

- The crankshaft has 5 journals and 8 balance weights.
- The precision and surface roughness of the pins and journals have been realized to reduce friction.
- The balance shaft drive gear has been installed onto the crankshaft.
- The crankshaft is made of forged steel.

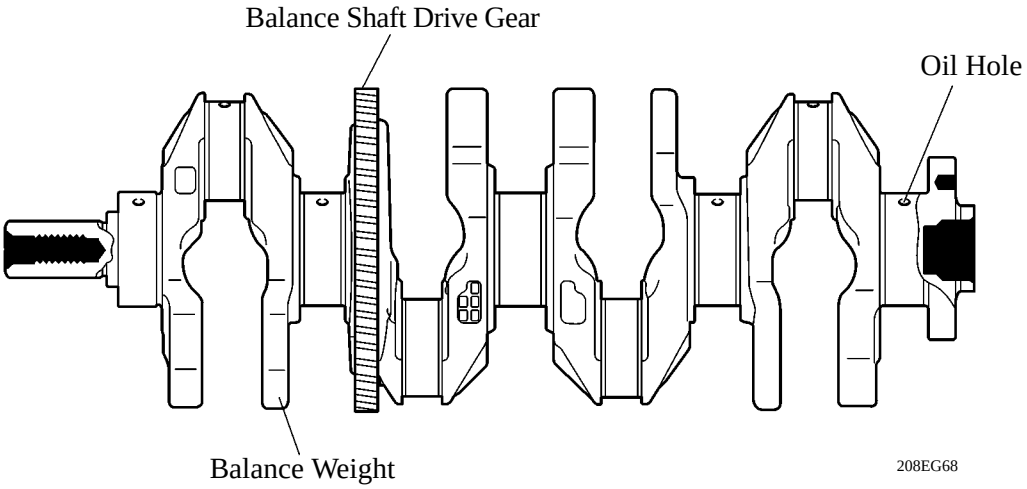

8. Balance Shaft

- A balance shaft is used to reduce vibrations.
- A direct-drive system is used which makes use of a gear that is installed onto the counterweight of crankshaft.
- In addition, a resin gear is used on the driven side to suppress noise and offer lightweight design.

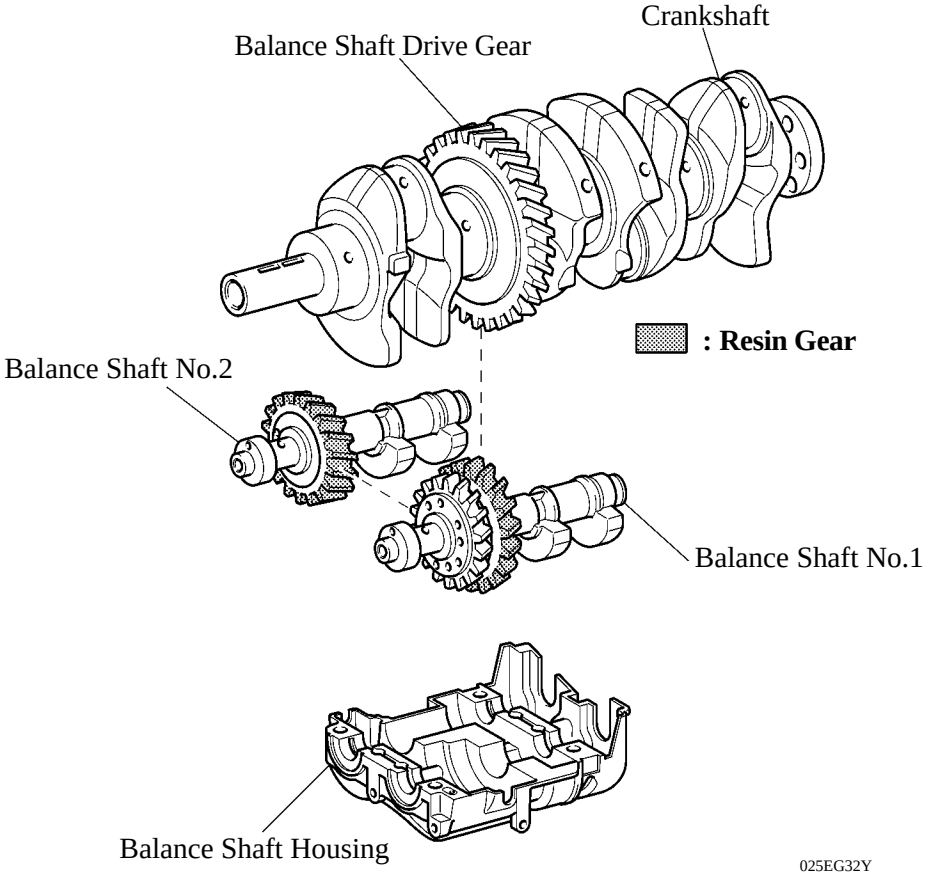

Downloaded from www.Manualslib.com manuals search engine

■VALVE MECHANISM

1. General

- The 2AZ-FXE engine is a high-expansion ratio Atkinson cycle engine of which the intake valve close timing has been significantly retarded by setting the VVT-i controller and intake camshaft to the retard side.
- Each cylinder is equipped with 2 intake valves and 2 exhaust valves. Intake and exhaust efficiency has been increased due to the larger total port areas.
- The valves are directly opened and closed by 2 camshafts.
- The intake and exhaust camshafts are driven by a chain. The VVT-i system used for the intake camshaft is used to increase fuel economy, engine performance and reduce exhaust emissions.
- A shimless type valve lifter is used.

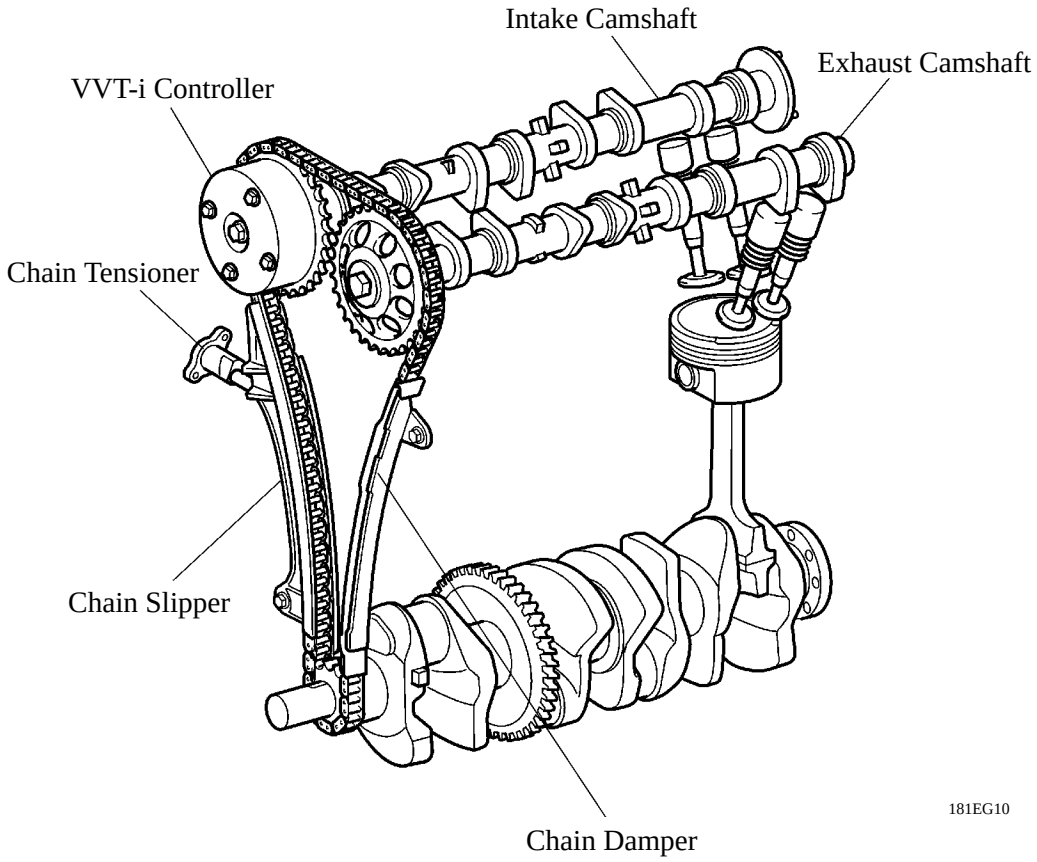

Downloaded from www.Manualslib.com manuals search engine

2. Camshaft

- The intake cam profile has been changed in conjunction with the change in valve timing. The new camshaft is adopted to realize excellent fuel economy, engine performance and reduce exhaust emissions.
- The intake camshaft is provided with timing rotor to trigger the camshaft position sensor.
- In conjunction with the adoption of the VVT-i system, an oil passage is provided in the intake camshaft in order to supply engine oil pressure to the VVT-i system.
- A VVT-i controller has been installed on the front of the intake camshaft to vary the timing of the intake valves.

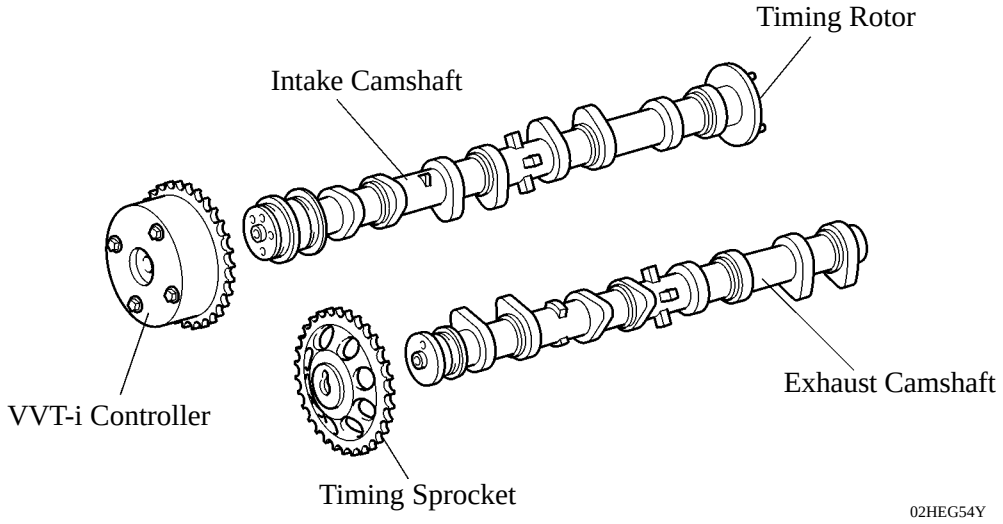

Downloaded from www.Manualslib.com manuals search engine

3. Intake and Exhaust Valve

- Intake and exhaust valves with large-diameter valve face have been adopted to improve the intake air and exhaust gas flow.
- Narrow valve stems are used to reduce the intake and exhaust resistance and for weight reduction.

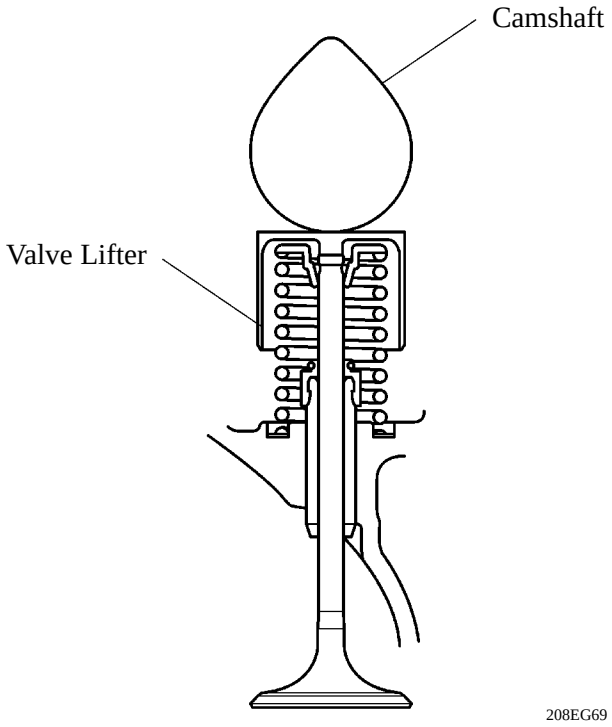

- Along with the increased amount of valve lift, shimless valve lifters that provide a large cam contact surface are used. The adjustment of the valve clearance is accomplished by selecting and replacing the appropriate valve lifters.

Service Tip

The valve lifters are available in 35 size in increment of 0.020 mm (0.008 in.), from 5.060 mm (0.199 in.) to 5.740 mm (0.226 in.). For details, refer to the 2007 Camry Hybrid Vehicle Repair Manual (Pub. No. RM02H0U).

Downloaded from www.Manualslib.com manuals search engine

4. Timing Chain

- A roller chain with an 8 mm (0.315 in.) pitch is used.
- The timing chain is lubricated by an oil jet.

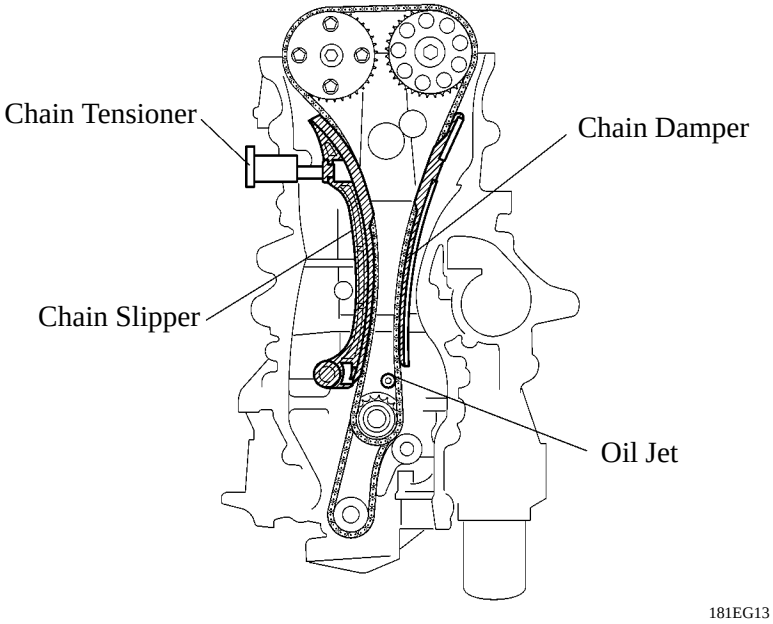

5. Chain Tensioner

- The chain tensioner uses a spring and oil pressure to maintain proper chain tension at all times.
  The chain tensioner suppresses noise generated by the chain. A ratchet type non-return mechanism is also used.
- To improve serviceability, the chain tensioner is constructed so that it can be removed and installed from the outside of the timing chain cover.

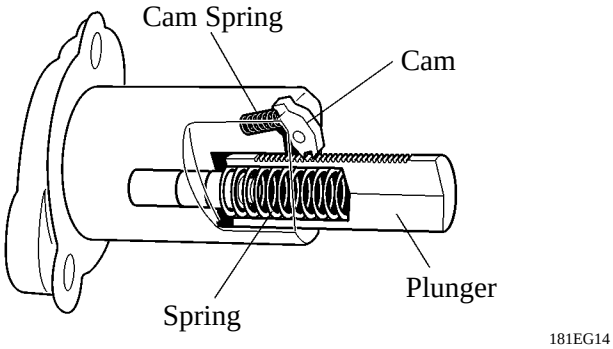

Downloaded from www.Manualslib.com manuals search engine

■LUBRICATION SYSTEM

1. General

- The lubrication circuit is fully pressurized and oil passes through an oil filter.
- The trochoidal type oil pump is chain-driven by the crankshaft.
- The oil filter is attached downward from the crankcase to improve serviceability.
- Along with the adoption of the VVT-i system, the cylinder head is provided with a VVT-i controller and a camshaft timing oil control valve. This system operates using the engine oil.

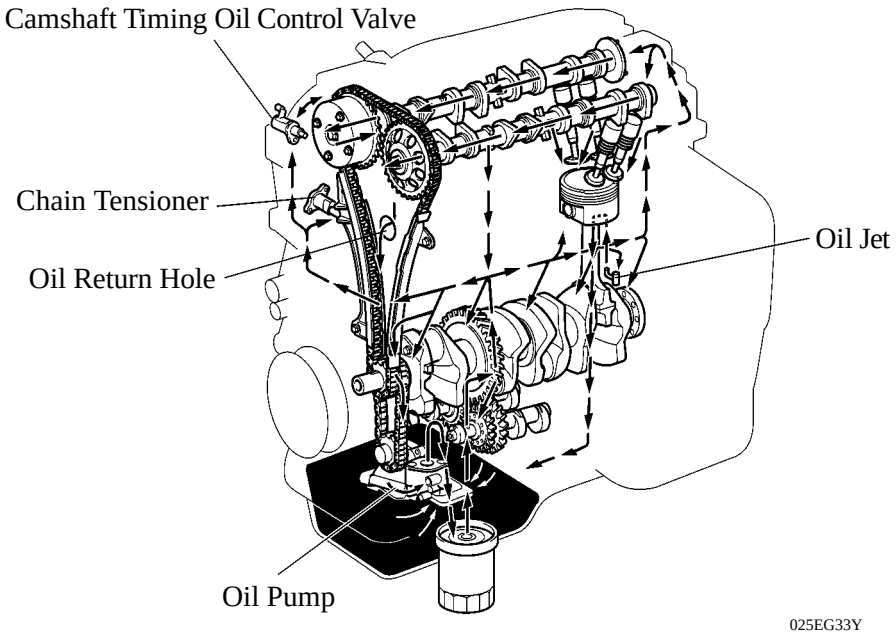

▶ Oil Circuit ◀

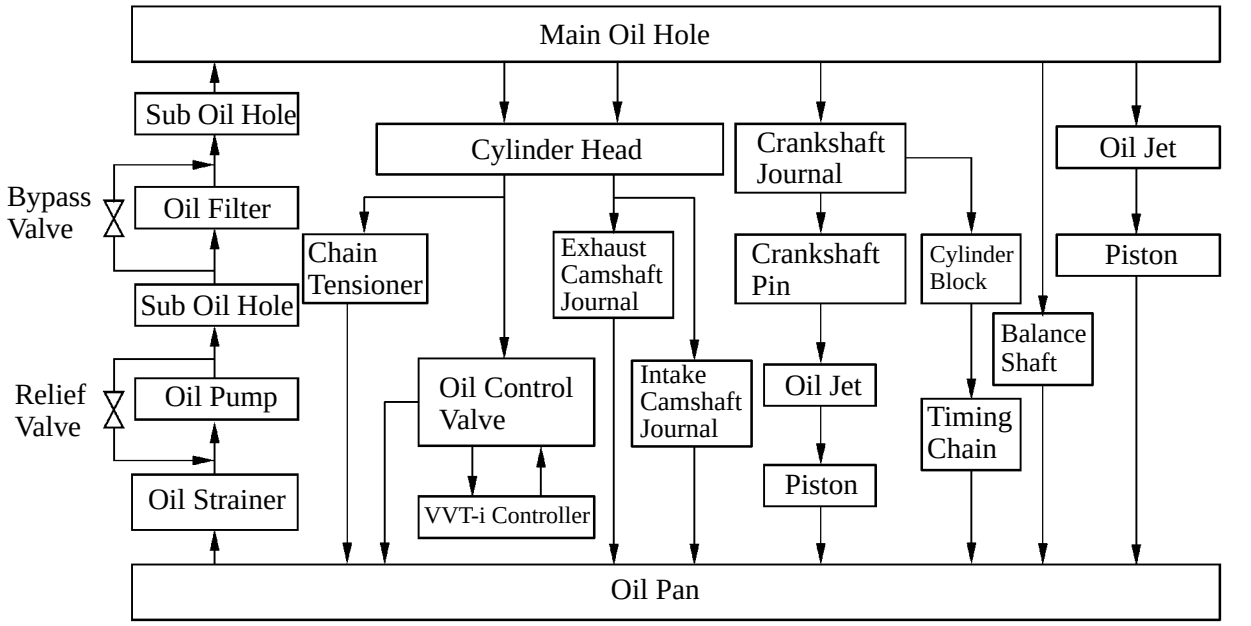

Downloaded from www.Manualslib.com manuals search engine

▶ Specifications ◀

Oil Capacity	Dry	liters (US qts, Imp. qts)	5.0 (5.3, 4.4)
	with Oil Filter	liters (US qts, Imp. qts)	4.3 (4.5, 3.8)
	without Oil Filter	liters (US qts, Imp. qts)	4.1 (4.3, 3.6)

2. Oil Pump

- The trochoidal type oil pump is chain-driven by the crankshaft, and fits compactly inside the oil pan.
- Friction has been reduced by means of 2 relief holes in the internal relief system.

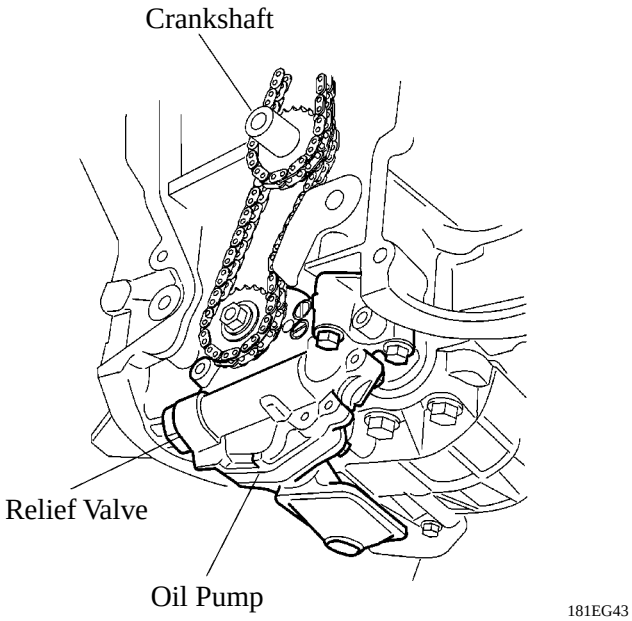

3. Piston Oil Jet

Piston oil jets for cooling and lubricating the pistons are used in the cylinder block.
These oil jets contain a check valve to prevent oil from being fed when the oil pressure is low. This prevents the overall oil pressure in the engine from dropping.

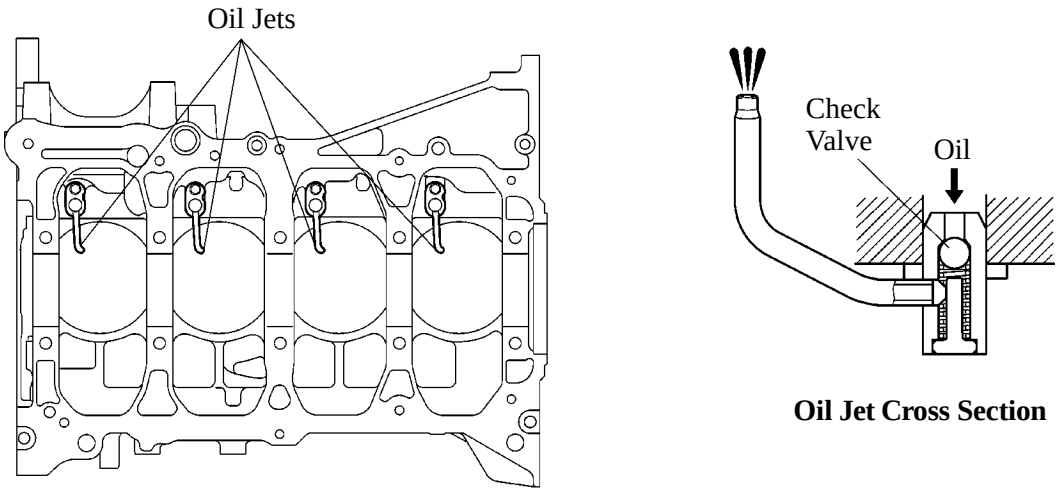

Downloaded from www.Manualslib.com manuals search engine

■COOLING SYSTEM

1. General

- The cooling system uses a pressurized forced circulation system with an open air type reservoir tank.
- Due to the introduction of the electric water pump for the air conditioning system, the coolant piping and coolant hose routing have been changed on the ’07 Camry Hybrid model.
- By increasing the cooling fan motor output (80 W + 80 W → 120 W + 120 W), the cooling performance has been ensured.
- A V-ribbed belt is used to drive the water pump.
- A thermostat with a bypass valve is located on the water inlet housing to maintain suitable temperature distribution in the cooling system. This prevents sudden jumps in temperature while the engine is warming up.
- The flow of the engine coolant makes a U-turn in the cylinder block to ensure a smooth flow of the engine coolant. In addition, a bypass passage is incorporated into the cylinder head and the cylinder block.
- Warm water from the engine is sent to the throttle body to prevent freeze-up.
- TOYOTA Genuine SLLC (Super Long Life Coolant) is used to extend the maintenance interval.

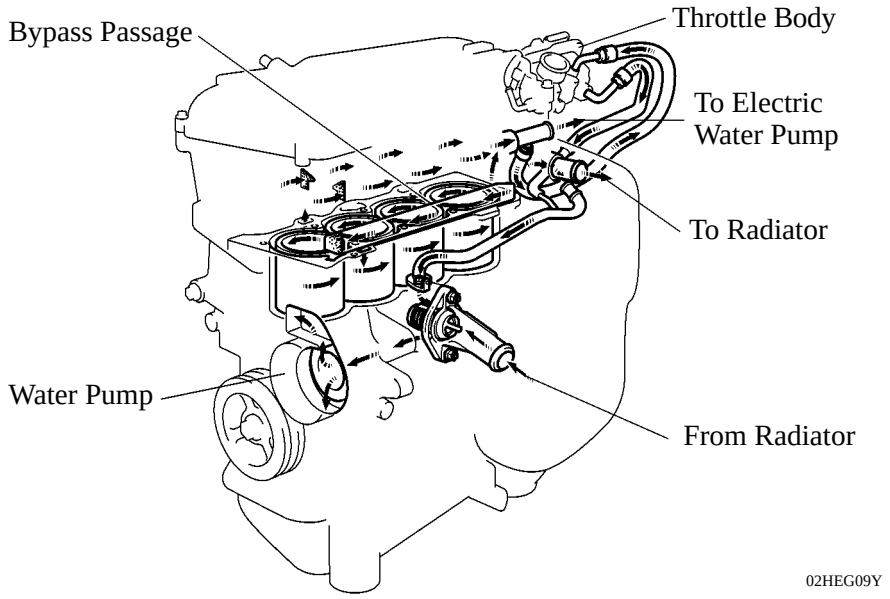

▶ Water Circuit ◀

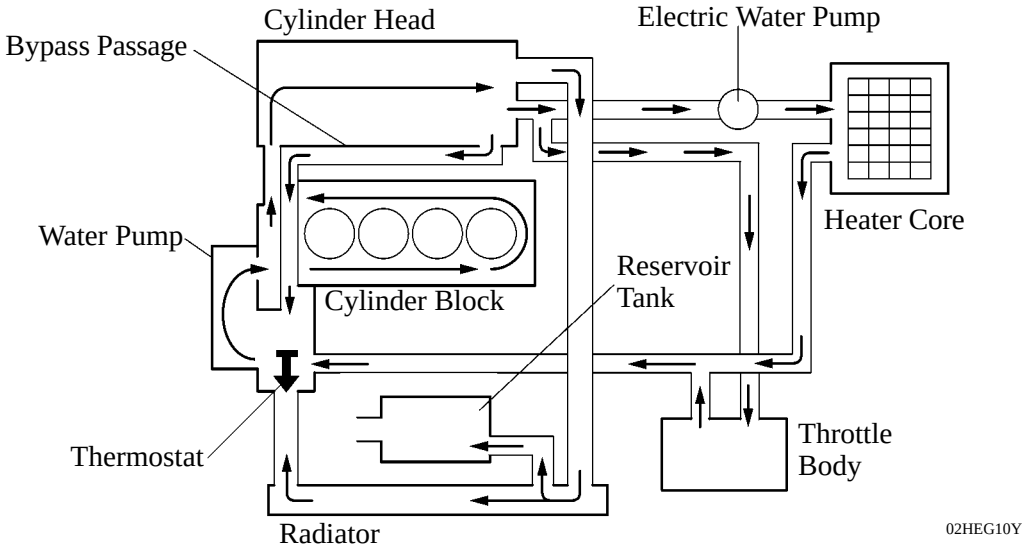

Downloaded from www.Manualslib.com manuals search engine

2. Engine Coolant

- TOYOTA genuine SLLC (Super Long Life Coolant) is used. Maintenance intervals are as shown in the table below:

Type		TOYOTA Genuine SLLC or the equivalent*
Maintenance Intervals	First Time	100,000 miles (160,000 km)
	Subsequent	Every 50,000 miles (80,000 km)
Color		Pink

*: Similar high quality ethylene glycol based non-silicate, non-amine, non-nitrite, and non-borate coolant with long-life hybrid organic acid technology. (Coolant with hybrid organic acid technology consists of a combination of low phosphates and organic acids.)

- SLLC is pre-mixed (50 % coolant and 50 % deionized water for U.S.A. or 55 % coolant and 45 % deionized water for Canada), so no dilution is needed when adding or replacing SLLC in the vehicle.
- The new maintenance interval (every 50,000 miles/80,000 km) can be applied to vehicles initially filled with LLC (red-colored), if SLLC (pink-colored) is used when the engine coolant is changed.

3. V-ribbed Belt

- The water pump is driven by the V-ribbed belt.
- The number of ribs on the V-ribbed belt used in the 2AZ-FXE engine has been reduced compared to the ’07 Camry with 2AZ-FE engine (7 → 4), thus decreasing the friction loss and improving the fuel economy.

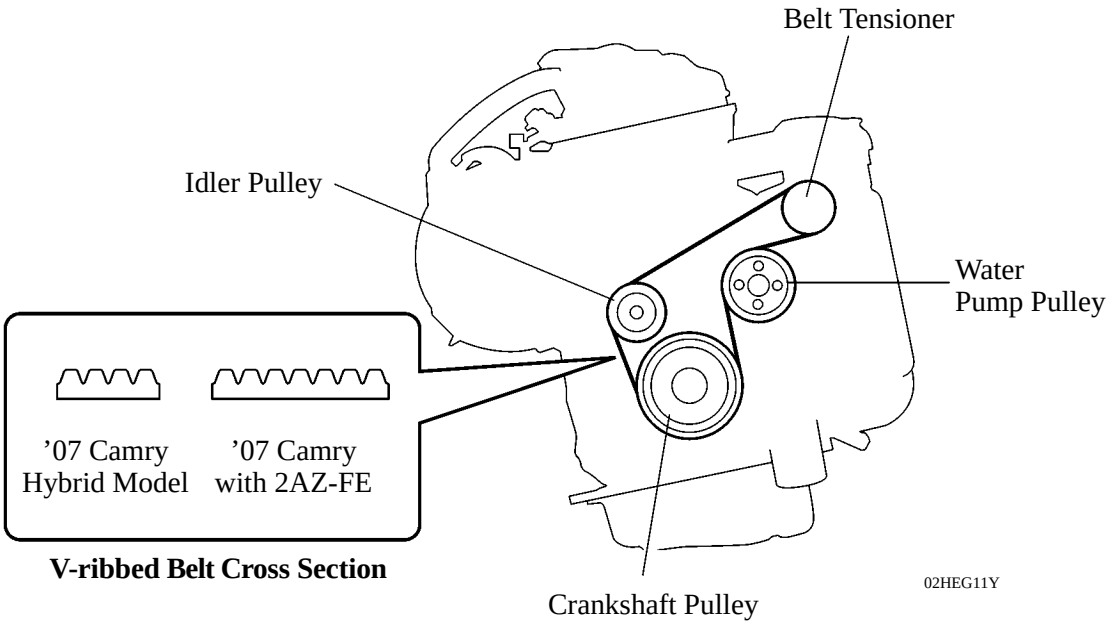

Downloaded from www.Manualslib.com manuals search engine

■INTAKE AND EXHAUST SYSTEM

1. General

- A linkless type throttle body, which realizes excellent throttle control, is used.
- The intake manifold is made of plastic to reduce the weight and the amount of heat transferred from the cylinder head.
- The adoption of the ETCS-i (Electronic Throttle Control System-intelligent) has realized excellent throttle control. For details about the ETCS-i, refer to page EG-43.
- A double wall structure compact exhaust manifold is used.
- A 2-way exhaust control system is provided to reduce noise and vibration in the main muffler.
- Ceramic type TWCs (Three-Way Catalytic Converter) whose capacities have been optimized for the 2AZ-FXE engine are provided on the exhaust manifold and exhaust front pipe. The exhaust emission performance of the engine is improved by these TWCs.

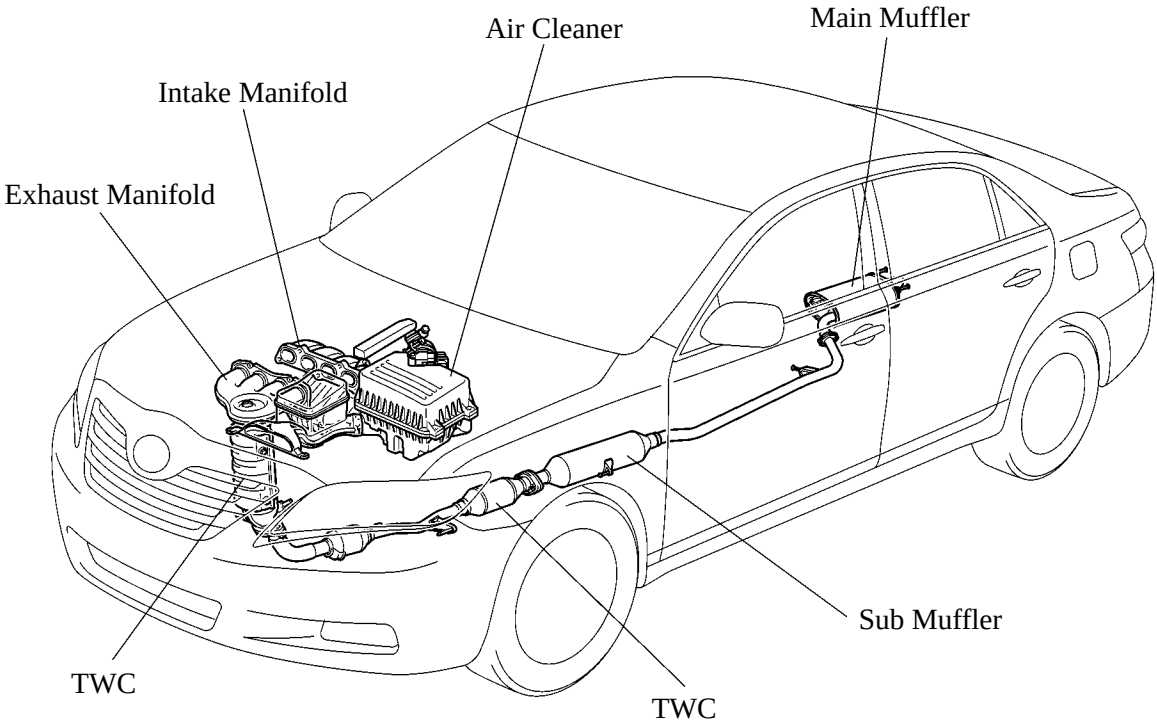

02HEG12Y

Downloaded from www.Manualslib.com manuals search engine

2. Air Cleaner

- A nonwoven, full-fabric type air cleaner element is used.
- A carbon filter, which adsorbs the HC that accumulates in the intake system when the engine is stopped, is used in the air cleaner cap in order to reduce evaporative emissions. This filter is maintenance-free.
- Resonators have been provided to reduce the amount of intake air sound.

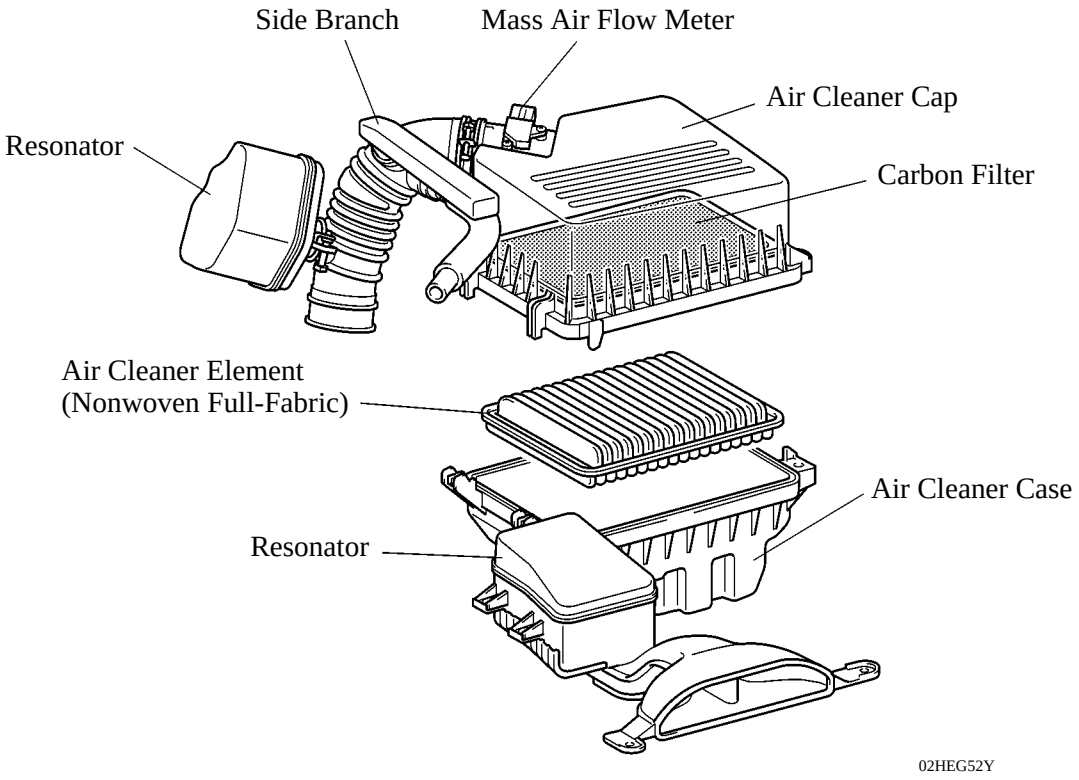

3. Throttle Body

- A link-less type throttle body in which the throttle position sensor and the throttle control motor are integrated is used. It realizes excellent throttle valve control. For details of throttle position sensor, see page EG-38.
- In the throttle control motor, a DC motor with excellent response and minimal power consumption is used. The THS ECU performs the duty ratio control of the direction and the amperage of the current that flows to the throttle control motor in order to regulate the throttle valve angle.

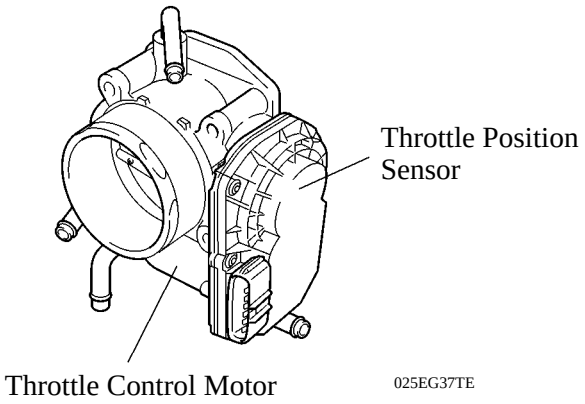

Downloaded from www.Manualslib.com manuals search engine

4. Intake Manifold

- The intake manifold is made of plastic to reduce the weight and the amount of heat transferred from the cylinder head. As a result, it has become possible to reduce the intake air temperature and improve the intake volumetric efficiency.
- A resonator is installed inside the air intake chamber which makes use of the intake pulse to improve torque in the mid-speed range.
- The intake manifold cover is used on the intake manifold to reduce intake air noise.

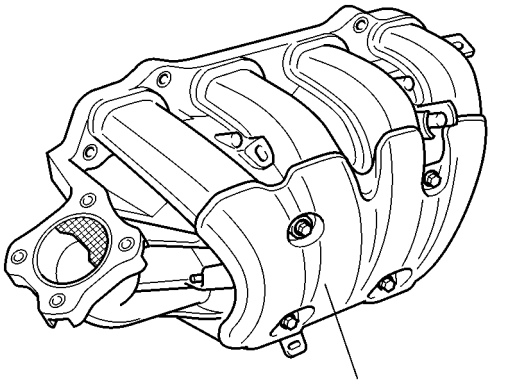

025EG27Y

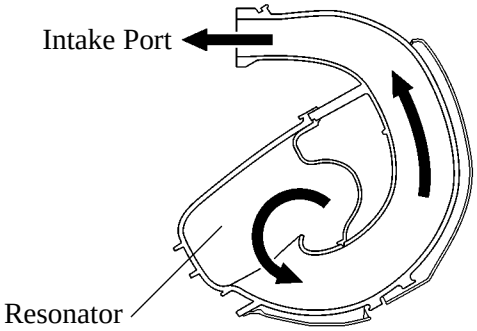

025EG28TE

5. Exhaust Manifold

A compact exhaust manifold with a double-wall construction is used. This manifold has been shaped to prevent the temperature of the exhaust gas from dropping as it travels from the exhaust port to the TWC. This promotes the activation of the TWC.
Furthermore, this manifold has been shaped so that the air-fuel ratio sensor can be mounted in the most effective position for detecting the exhaust gas.

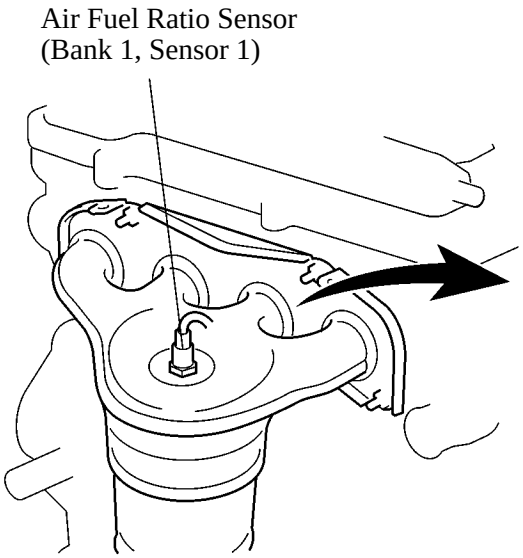

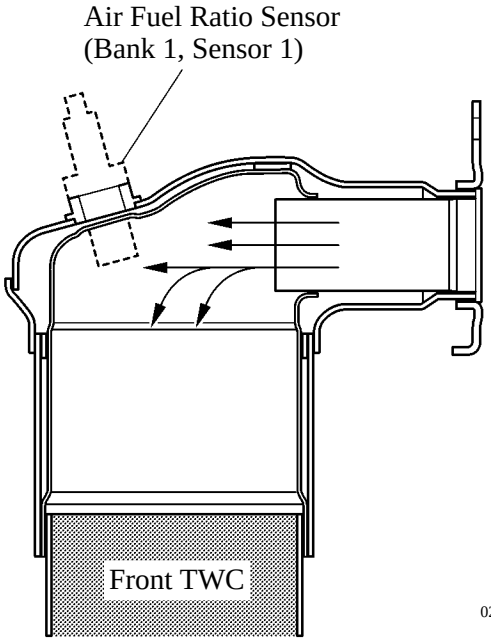

025EG35Y

Downloaded from www.Manualslib.com manuals search engine

6. Exhaust Pipe

General

- 2-way exhaust control system is provided to reduce noise and vibration in the main muffler.
- A long tail mechanism is used in the main muffler to aim at reducing exhaust noise while the engine is running in the low speed range.

Long Tail Mechanism

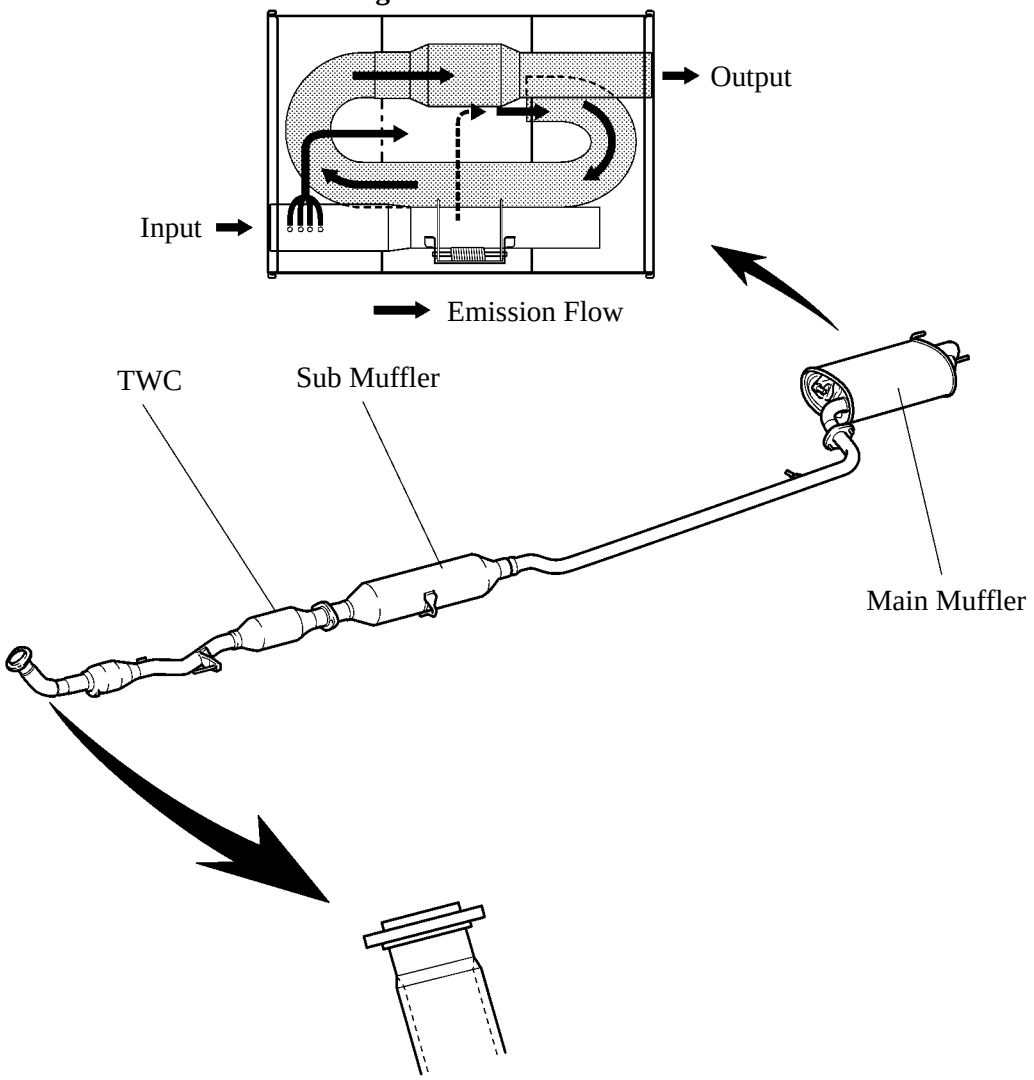

Double Wall Structure

Downloaded from www.Manualslib.com manuals search engine

2-Way Exhaust Control System

- 2-way exhaust control system is used. This system reduces the back pressure by opening and closing a variable valve that is enclosed in the main muffler, thus varying the exhaust gas pressure.
- The valve opens steplessly in accordance with the operating condition of the engine, thus enabling a quieter operation at lower engine speeds, and reducing back pressure at higher engine speeds.

1) Construction

The control valve is enclosed in the main muffler. When the exhaust gas pressure overcomes the spring pressure, the control valve opens steplessly in accordance with the exhaust gas pressure.

2) Operation

a. When Control Valve is Closed (low engine speed)

Since the pressure in the main muffler is low, the control valve is closed. Hence exhaust gas does not pass the bypass passage, and exhaust noise is decreased in the main muffler.

b. When Control Valve is Open (middle to high engine speed)

The valve opens as the engine speed and the back pressure in the muffler increase. This allows a large volume of exhaust gas to pass the bypass passage, thereby substantially decreasing the back pressure.

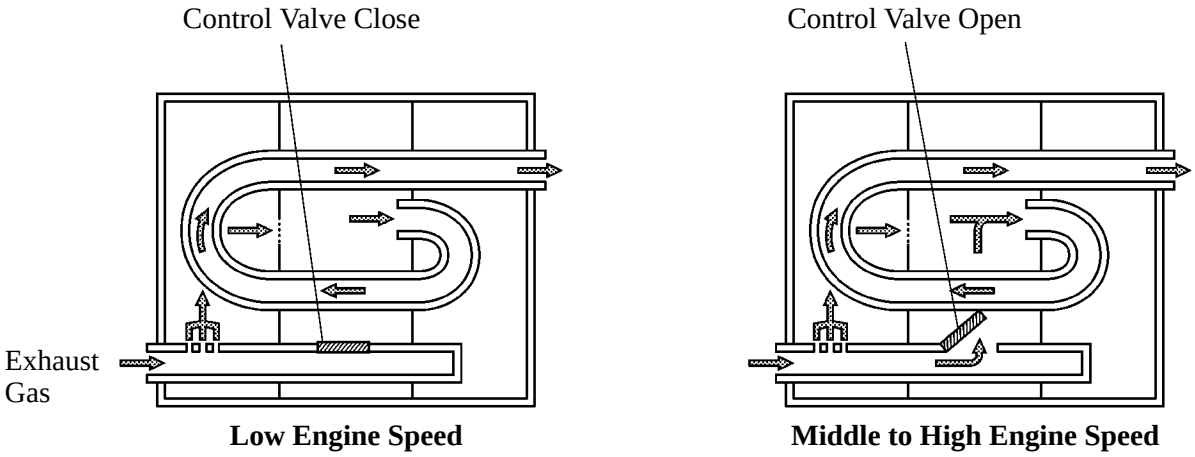

025EG30Y

Downloaded from www.Manualslib.com manuals search engine

■FUEL SYSTEM

1. General

- A fuel returnless system is used to reduce evaporative emissions.
- A fuel cut control is used to stop the fuel pump when the SRS airbag is deployed in a frontal or side collision. For details, see page EG-49.
- A compact fuel pump in which the fuel filter, pressure regulator, and fuel sender gauge are integrated into the fuel pump assembly is used.
- A quick connector is used to connect the fuel pipe with the fuel hose for excellent serviceability.
- The aluminum die-cast delivery pipe has been integrated with the pulsation damper.
- A compact 12-hole type injector is used.
- The newly designed fuel vapor-containment system prevents fuel vapor from escaping from the fuel tank by completely sealing the fuel tank, except during refueling and while the engine is running.
- Due to the introduction of the fuel vapor-containment system, a pressure resistant fuel tank is used.

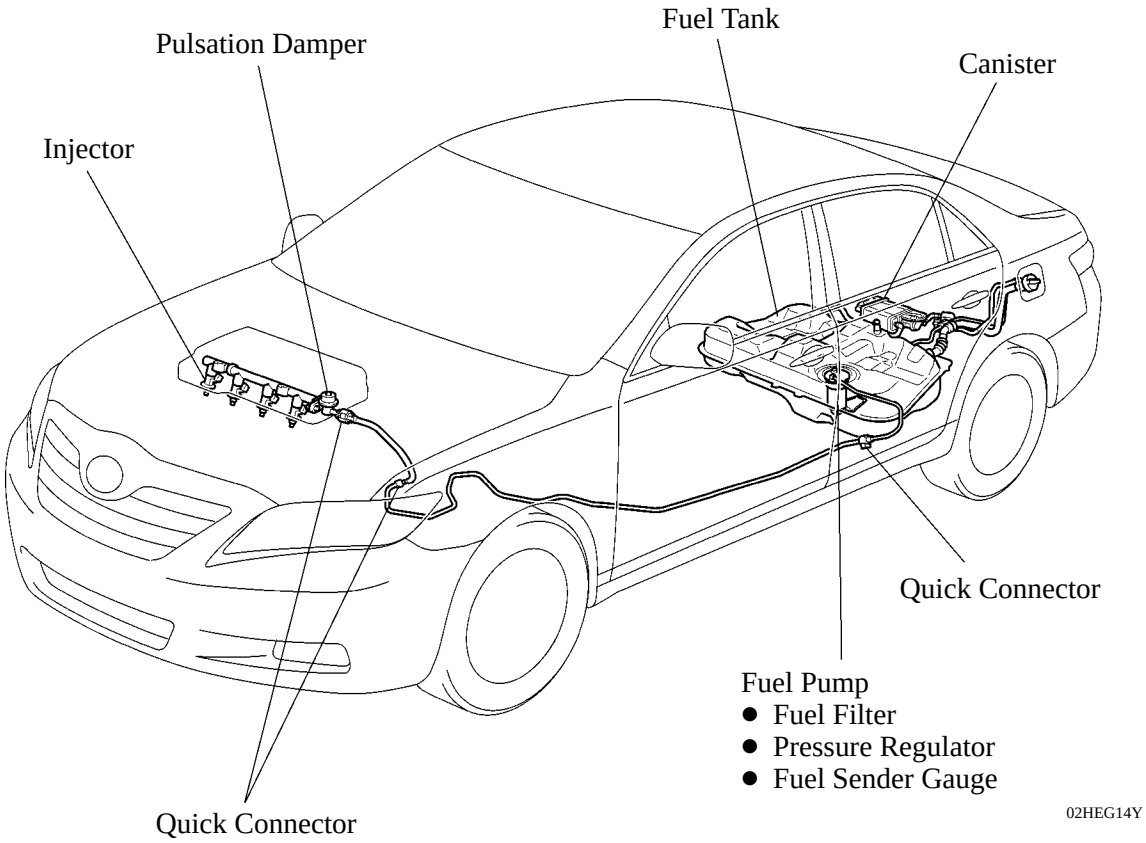

Downloaded from www.Manualslib.com manuals search engine

2. Fuel Returnless System

The fuel returnless system is used to reduce the evaporative emission. As shown below, integrating the fuel filter, pressure regulator, and fuel sender gauge with fuel pump assembly makes it possible to discontinue the return of fuel from the engine area and prevent temperature rise inside the fuel tank.

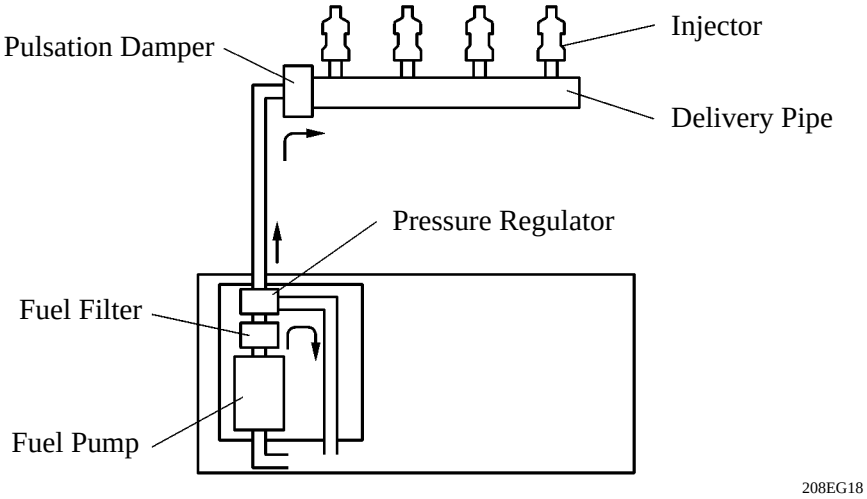

3. Fuel Injector

The 12-hole type injector is used to improve the atomization of fuel.

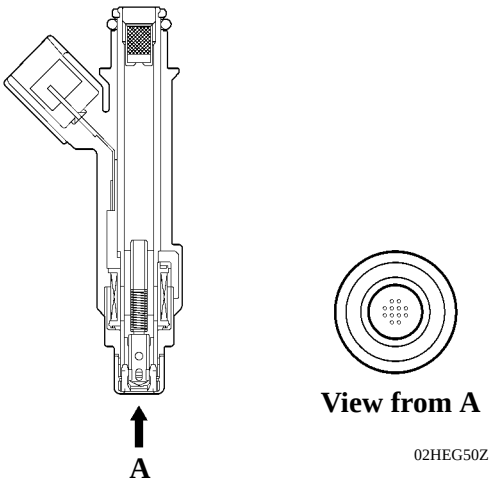

Downloaded from www.Manualslib.com manuals search engine

4. Fuel Tank

The fuel tank made of 1.8 mm (0.07 in.) thick steel sheet, which provides higher pressure resistance is used.

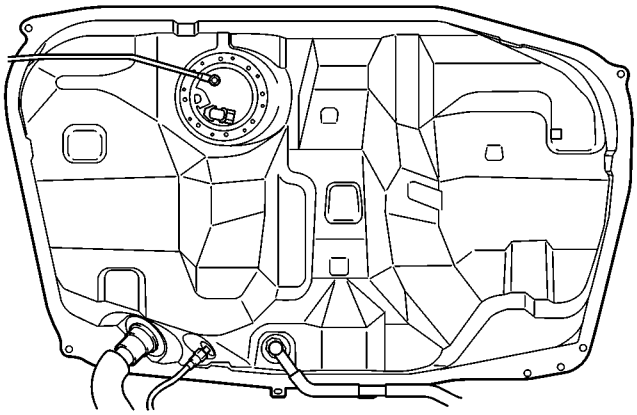

02HEG15Y

Downloaded from www.Manualslib.com manuals search engine

■IGNITION SYSTEM

1. General

A DIS (Direct Ignition System) is used. The DIS improves the ignition timing accuracy, reduces high-voltage loss, and enhances the overall reliability of the ignition system by eliminating the distributor. The DIS in this engine is an independent ignition system, which has one ignition coil (with igniter) for each cylinder.

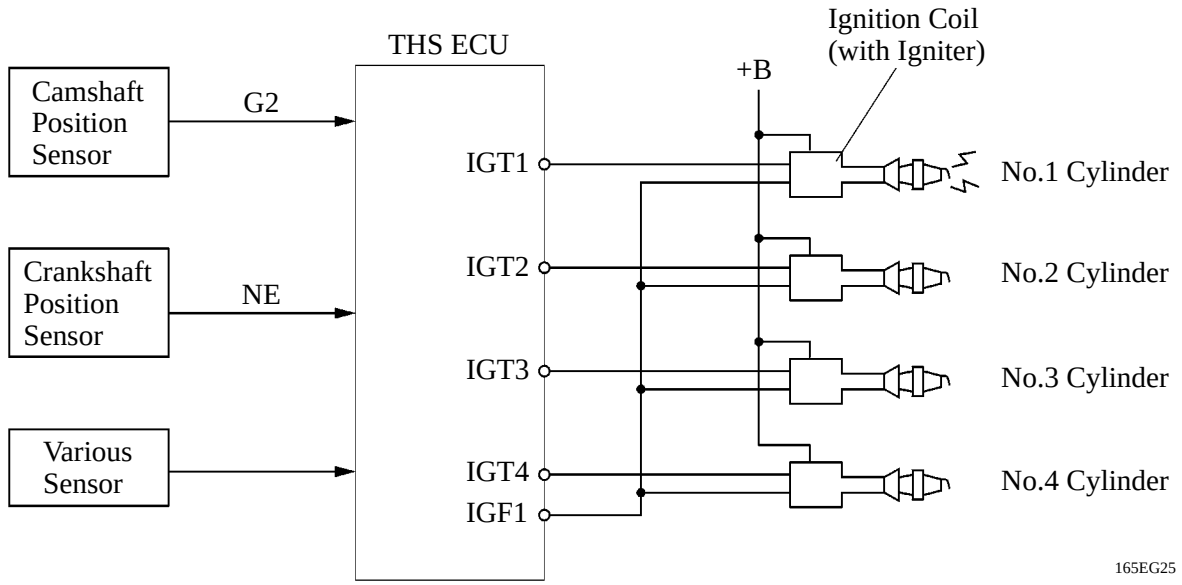

2. Ignition Coil

The DIS provides 4 ignition coils, one for each cylinder. The spark plug caps, which provide contact to the spark plugs, are integrated with an ignition coil. Also, an igniter is enclosed to simplify the system.

3. Spark Plug

Iridium-tipped spark plugs are used to realize a 120,000 miles (192,000 km) maintenance-free operation. By making the center electrode of iridium, the same ignition performance as the platinum-tipped spark plug have been achieved and further improvement of durability has been realized.

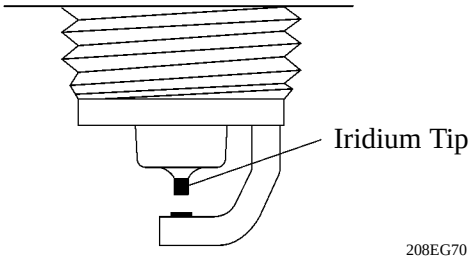

▶ Specifications ◀

DENSO	SK20R11
NGK	IFR6A11
Plug Gap	1.0 - 1.1 mm (0.0394 - 0.043 in.)

Downloaded from www.Manualslib.com manuals search engine

4. Layout of Main Components

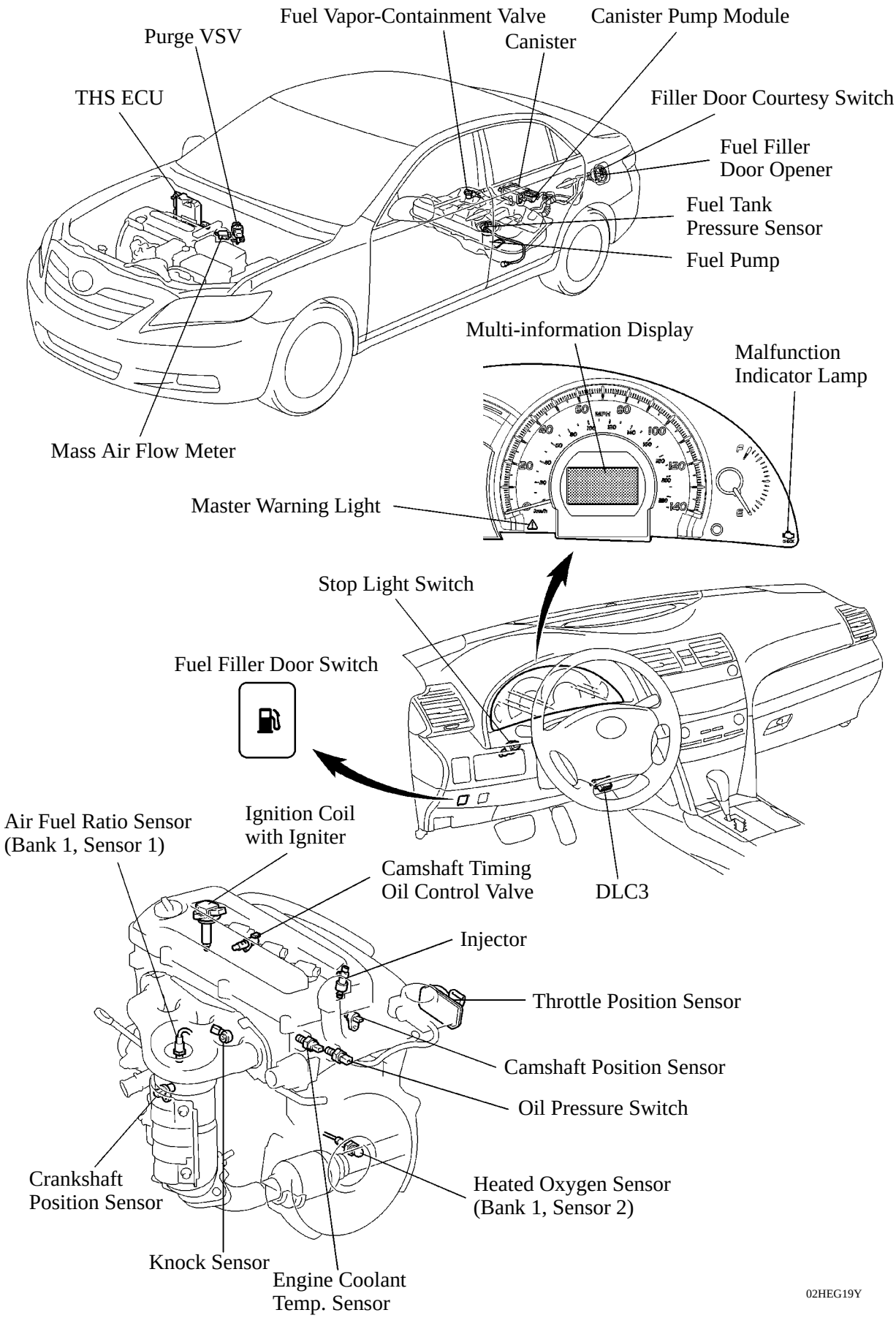

Downloaded from www.Manualslib.com manuals search engine

■ENGINE CONTROL SYSTEM

1. General

- The 2AZ-FXE engine is controlled by the THS ECU. The THS ECU determines the motive force required by the driver in accordance with the pedal effort applied by the driver on the accelerator. Then, the THS ECU determines the driving conditions of the vehicle in accordance with the vehicle speed, vehicle load, and various sensor signals. Furthermore, the THS ECU starts and stops the engine in accordance with the motive force required by the driver, regardless of the driving conditions, and generates the required engine motive force.
- The engine control system of the 2AZ-FXE engine has following system.

System	Outline
SFI [Sequential Multiport Fuel Injection]	● An L-type SFI system directly detects the intake air mass with a hot wire type mass air flow meter. ● The fuel injection system is a sequential multiport fuel injection system. ● Fuel injection takes two forms: Synchronous injection, which always takes place with the same timing in accordance with the basic injection duration and an additional correction based on the signals provided by the sensors. Non-synchronous injection, which takes place at the time an injection request based on the signals provided by the sensors is detected, regardless of the crankshaft position. ● Synchronous injection is further divided into group injection during a cold start, and independent injection after the engine is started.
ESA [Electronic Spark Advance]	● Ignition timing is determined by the THS ECU based on signals from various sensors. The THS ECU corrects ignition timing in response to engine knocking. ● This system selects the optimal ignition timing in accordance with the signals received from the sensors and sends the (IGT) ignition signal to the igniter.
ETCS-i [Electronic Throttle Control System-intelligent] [See page EG-43]	Optimally controls the throttle valve opening in accordance with the amount of accelerator pedal effort and the condition of the engine and the vehicle.
VVT-i [Variable Valve Timing-intelligent] [See page EG-45]	Controls the intake camshaft to an optimal valve timing in accordance with the engine condition.
Fuel Pump Control [See page EG-49]	● Fuel pump operation is controlled by signals from the THS ECU. ● The fuel pump is stopped, when the SRS airbag is deployed in a frontal, side, and rear of side collision.
Cooling Fan Control [See page EG-50]	Cooling fan operation is controlled by signals from the THS ECU based on the engine coolant temperature, inverter water temperature and the air conditioning operating condition.
Air Fuel Ratio Sensor and Oxygen Sensor Heater Control	Maintains the temperature of the air fuel ratio sensor or oxygen sensor at an appropriate level to increase accuracy of detection of the oxygen concentration in the exhaust gas.

(Continued)

Downloaded from www.Manualslib.com manuals search engine

System	Outline
Evaporative Emission Control [See page EG-51]	● A control system that functions as follows is used: When the engine is stopped while the vehicle is in motion or stopped, the fuel vapor-containment valve keeps the fuel tank sealed to prevent the fuel vapor from being discharged. Only when the engine is operating, the fuel vapor-containment valve operates, allowing the canister to absorb the fuel vapor, which is subsequently consumed by the engine. ● A refueling control system that functions as follows is used: When the internal pressure of the fuel tank is high because it is sealed, this system lowers the internal pressure of the fuel tank before opening the fuel filler door and refueling the tank. ● Approximately five hours after the power switch has been turned OFF, the THS ECU operates the canister pump module to detect any evaporative emission leakage occurring between the fuel tank and the canister through changes in the fuel tank pressure.
HV Immobilizer	Prohibits fuel delivery, ignition, and starting the THS II if an attempt is made to start the THS II with an invalid key.
Diagnosis [See page EG-75]	When the THS ECU detects a malfunction, the THS ECU diagnoses and memorizes the failed section.
Fail-Safe [See page EG-75]	When the THS ECU detects a malfunction, the THS ECU stops or controls the engine according to the data already stored in the memory.

Downloaded from www.Manualslib.com manuals search engine

2. Construction

The configuration of the engine control system is as shown in the following chart.

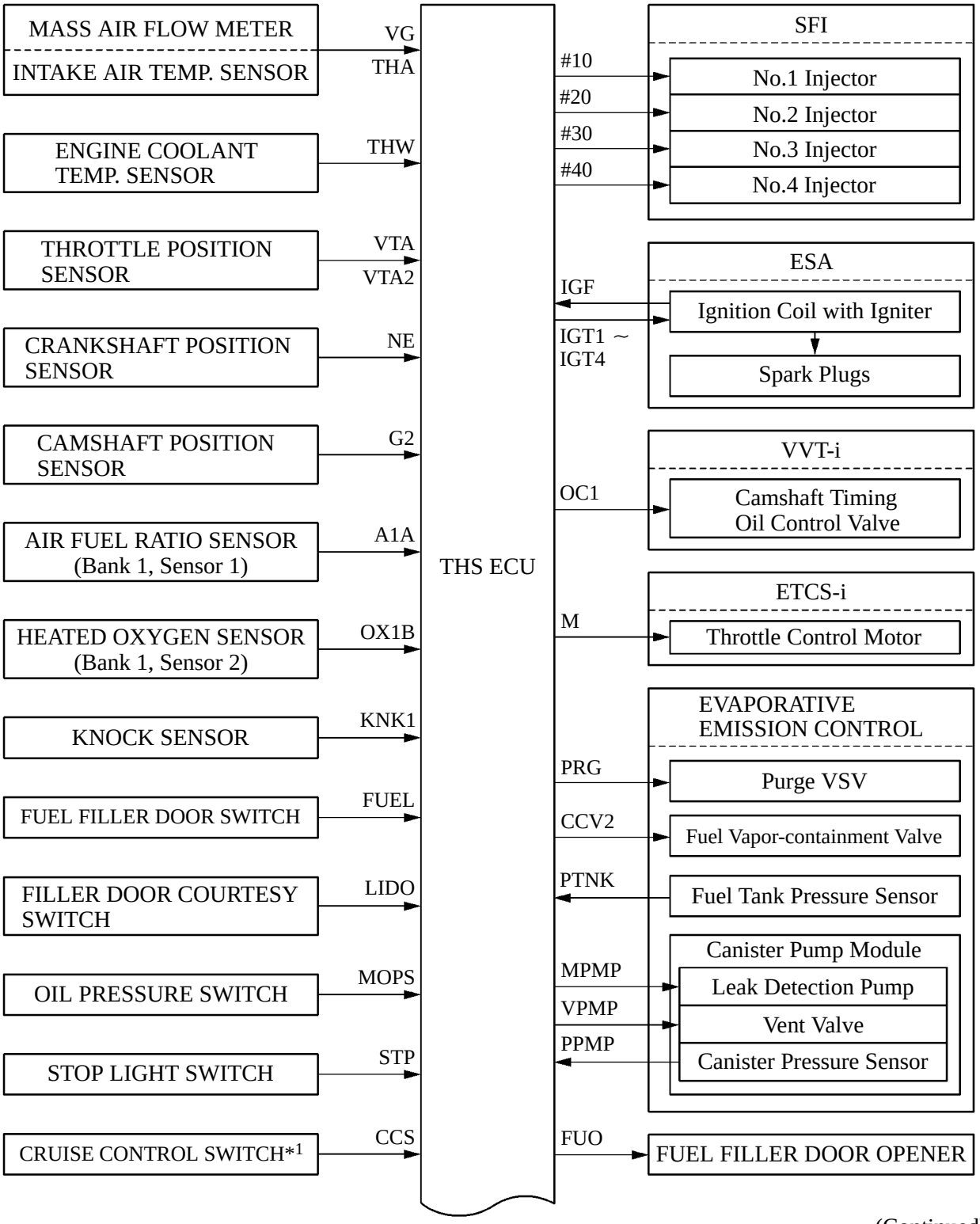

(Continued)

02HEG16TE

Downloaded from www.Manualslib.com manuals search engine

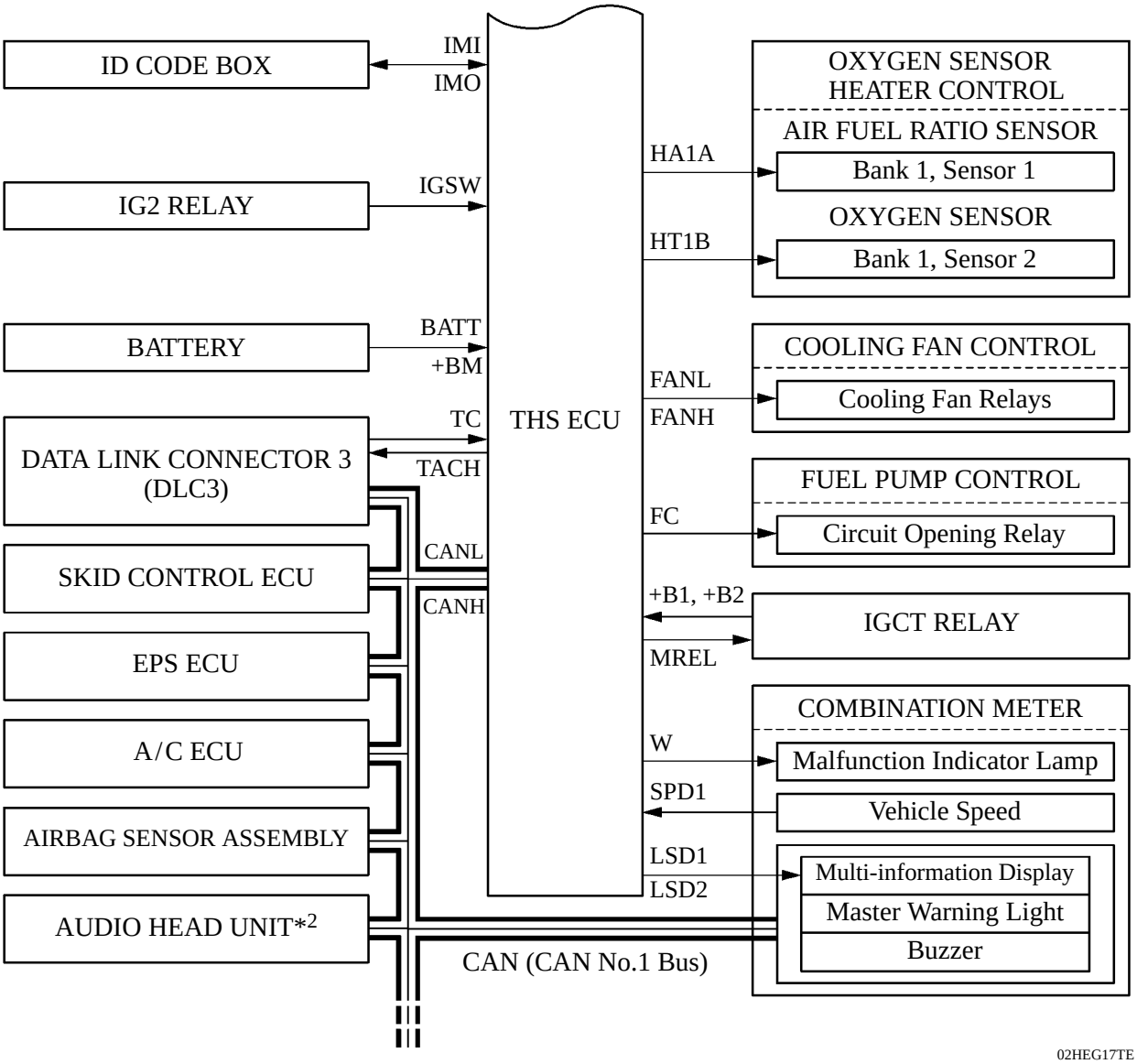

*1: Only for models with cruise control system
*2: Only for models with navigation with AV system

Downloaded from www.Manualslib.com manuals search engine

3. Engine Control System Diagram

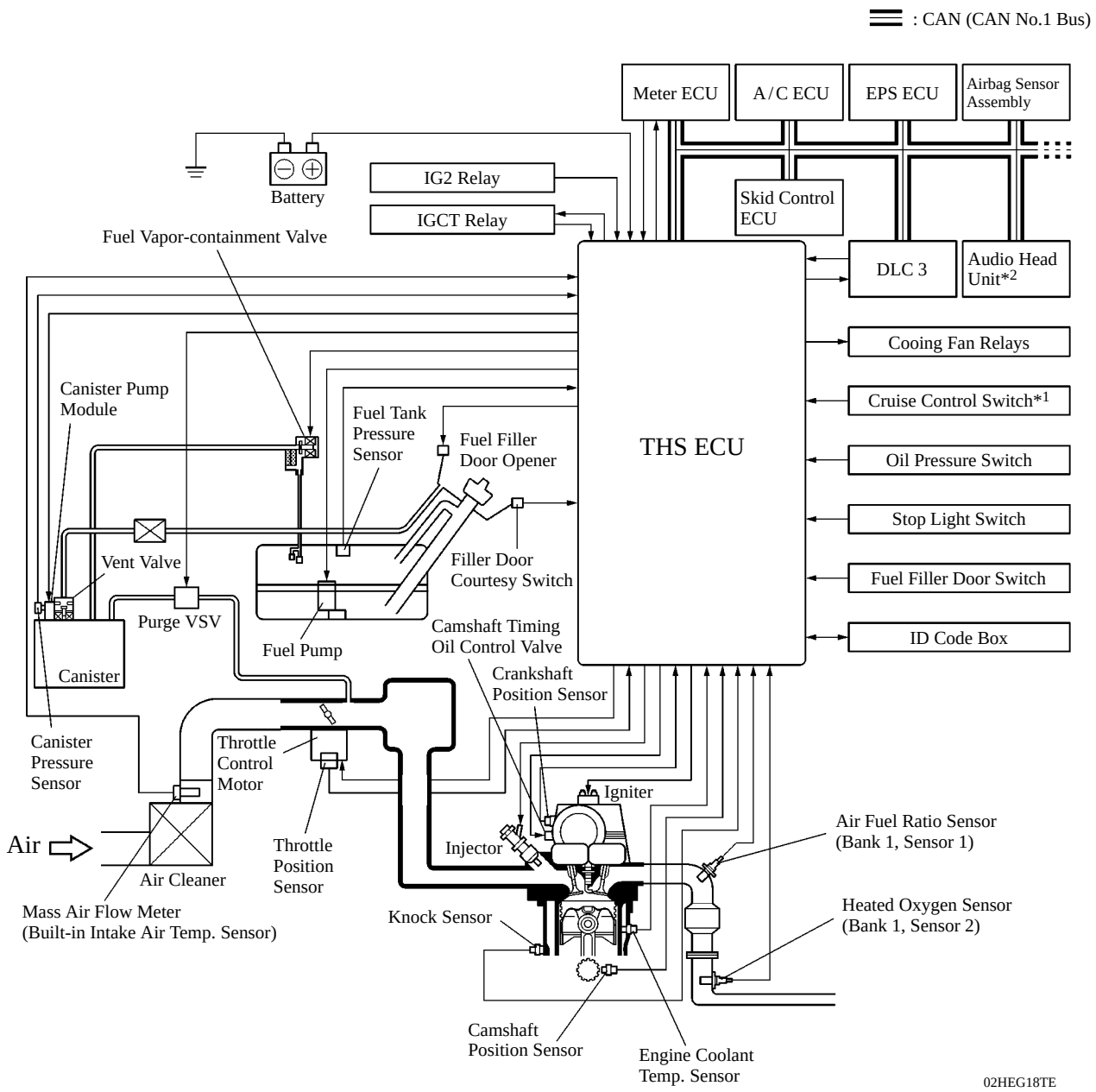

*1: Only for models with cruise control system
*2: Only for models with navigation with AV system

Downloaded from www.Manualslib.com manuals search engine

5. Main Component of Engine Control System

General

The main components of the 2AZ-FXE engine control system are as follows:

Components	Outline	Quantity	Function
THS ECU	32-bit CPU	1	The THS ECU optimally controls the SFI, ESA and ISC to suit the operating conditions of the engine in accordance with the signals provided by the sensors.
Oxygen Sensor (Bank 1, Sensor 2)	Cup Type with Heater	1	This sensor detects the oxygen concentration in the exhaust emission by measuring the electromotive force which is generated in the sensor itself.
Air Fuel Ratio Sensor (Bank 1, Sensor 1)	Planar Type with Heater	1	As with the oxygen sensor, this sensor detects the oxygen concentration in the exhaust emission. However, it detects the oxygen concentration in the exhaust emission linearly.
Mass Air Flow Meter	Hot-wire Type	1	This sensor has a built-in hot-wire to directly detect the intake air mass.
Crankshaft Position Sensor (Rotor Teeth)	Pick-up Coil Type (36-2)	1	This sensor detects the engine speed and performs the cylinder identification.
Camshaft Position Sensor (Rotor Teeth)	Pick-up Coil Type (36-2)	1	This sensor performs the cylinder identification.
Engine Coolant Temperature Sensor	Thermistor Type	1	This sensor detects the engine coolant temperature by means of an internal thermistor.
Intake Air Temperature Sensor	Thermistor Type	1	This sensor detects the intake air temperature by means of an internal thermistor.
Knock Sensor	Built-in Piezoelectric Type (Flat Type)	1	This sensor detects an occurrence of the engine knocking indirectly from the vibration of the cylinder block caused by the occurrence of engine knocking.
Throttle Position Sensor	No-contact Type	1	This sensor detects the throttle valve opening angle.
Injector	12-Hole Type	4	The injector is an electromagnetically-operated nozzle which injects fuel in accordance with signals from the THS ECU.

Downloaded from www.Manualslib.com manuals search engine

Mass Air Flow Meter

- This mass air flow meter, which is a plug-in type, allows a portion of the intake air to flow through the detection area. By directly measuring the mass and the flow rate of the intake air, the detection precision is improved and the intake air resistance is reduced.
- This mass air flow meter has a built-in intake air temperature sensor.

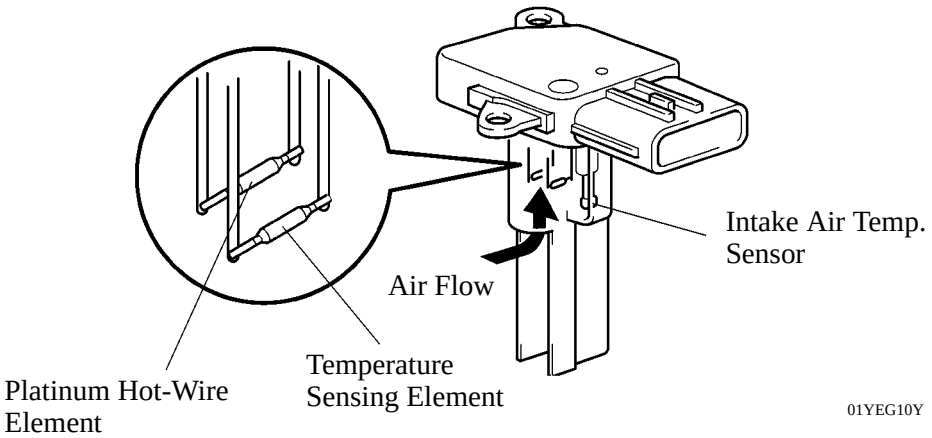

Crankshaft Position Sensor

The timing rotor of the crankshaft consists of 34 teeth, with 2 teeth missing. The crankshaft position sensor outputs the crankshaft rotation signals every 10°, and the missing teeth are used to determine the top-dead-center.

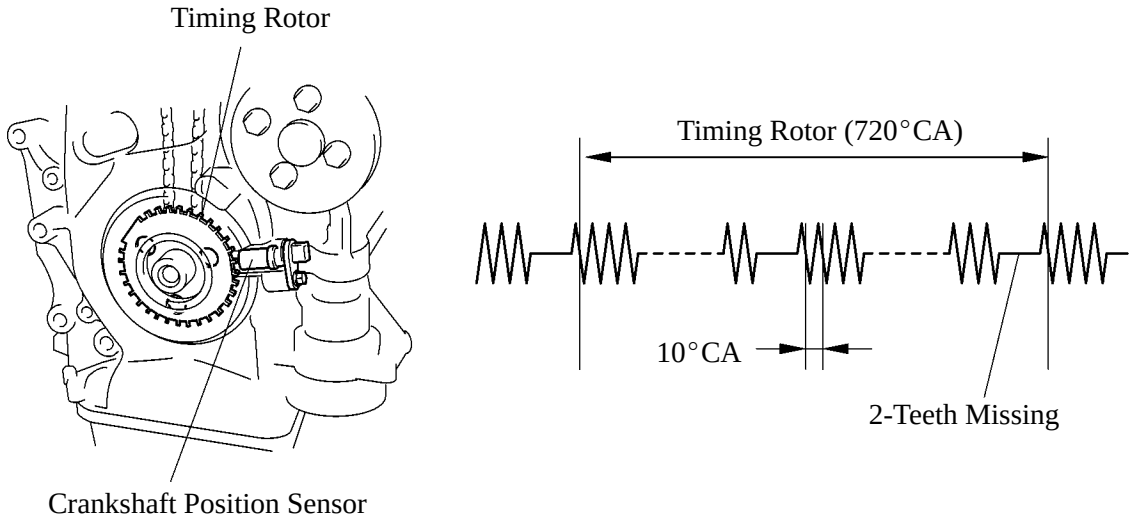

Downloaded from www.Manualslib.com manuals search engine

Camshaft Position Sensor

The camshaft position sensor is mounted on the left bank of cylinder head. To detect the camshaft position, a protrusion that is provided on the timing pulley is used to generate 1 pulse for every 2 revolution of the crankshaft.

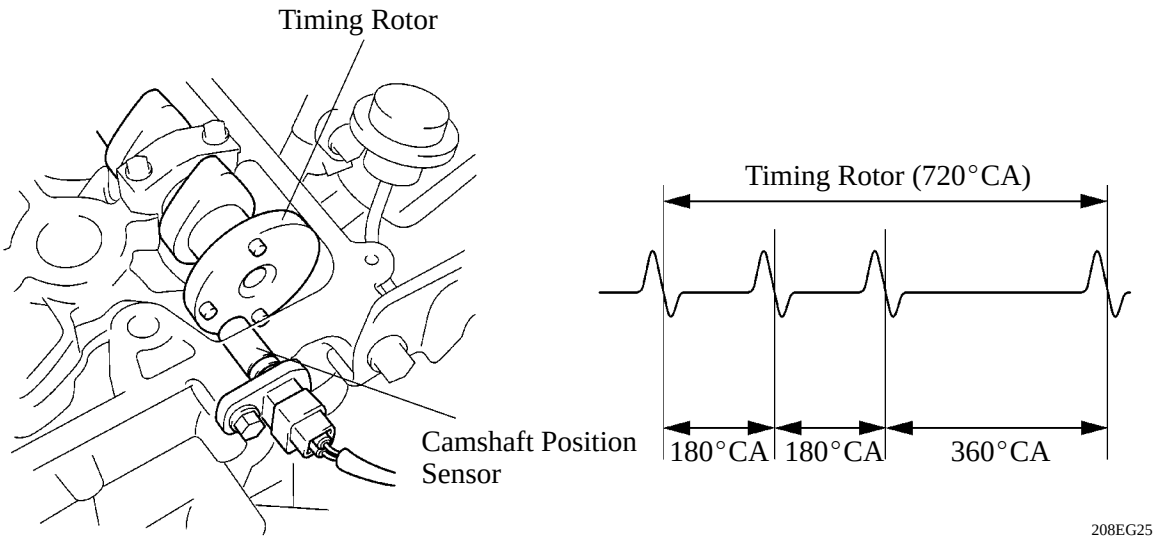

Downloaded from www.Manualslib.com manuals search engine

Throttle Position Sensor

- The no-contact type throttle position sensor uses a Hall IC, which is mounted on the throttle body.
- The Hall IC is surrounded by a magnetic yoke. The Hall IC converts the changes that occur in the magnetic flux at that time into electrical signals and outputs them in the form of a throttle valve effort to the THS ECU.
- The Hall IC contains circuits for the main and sub signals. It converts the throttle valve opening angles into electric signals with two differing characteristics and outputs them to the THS ECU.

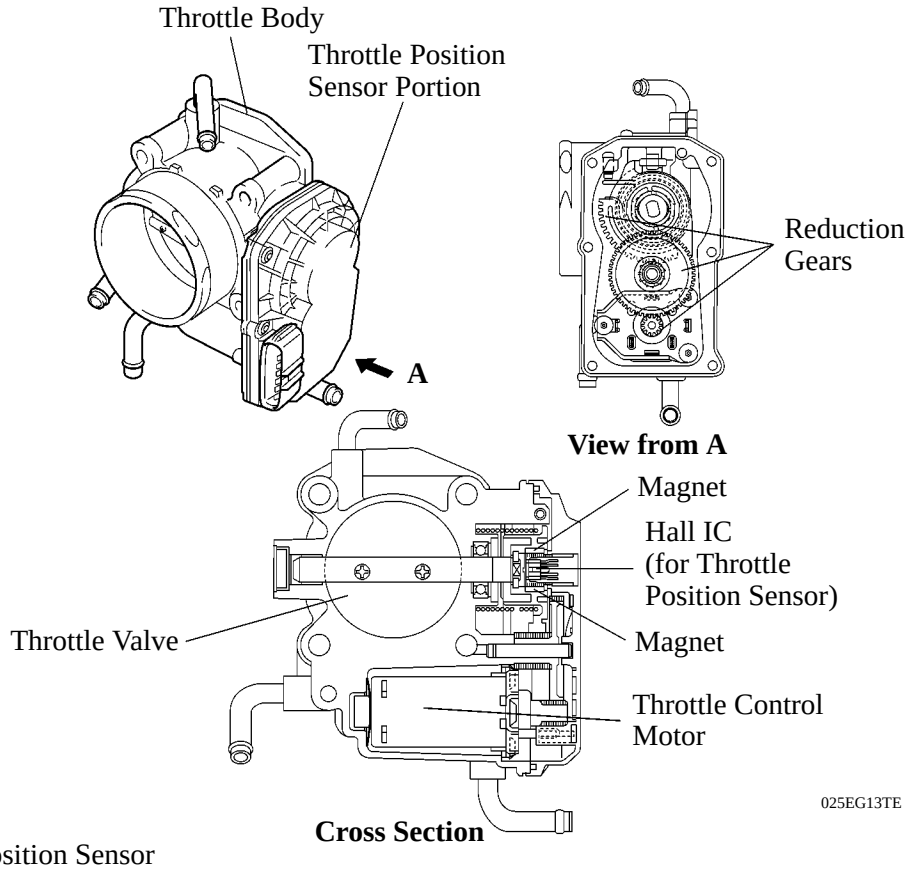

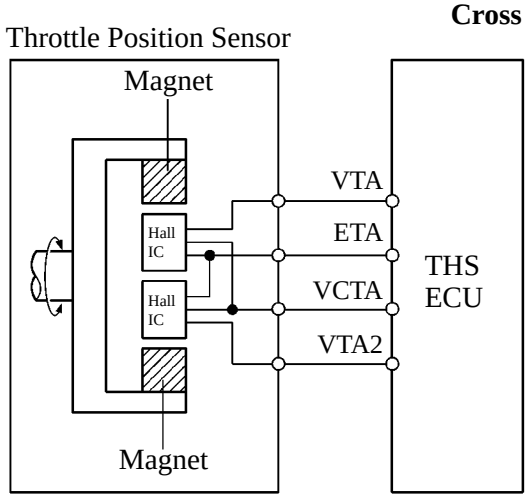

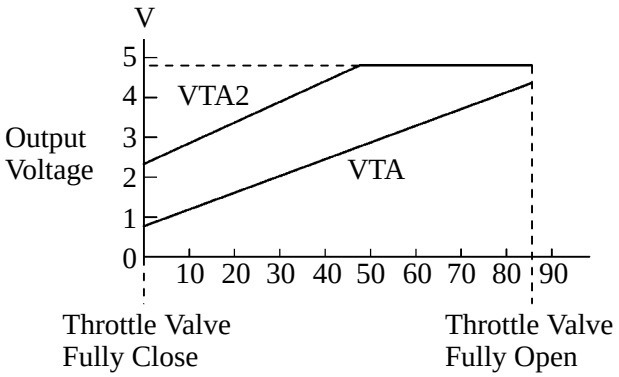

Throttle Valve Opening Angle 02HEG57Y

Service Tip

The inspection method differs from the conventional throttle position sensor because this sensor uses a hall IC. For details, refer to the 2007 Camry Hybrid Vehicle Repair Manual (Pub. No. RM02H0U).

Downloaded from www.Manualslib.com manuals search engine

Knock Sensor (Flat Type)

1) General

In the conventional type knock sensor (resonant type), a vibration plate, which has the same resonance point as the knocking frequency of the engine, is built in and can detect the vibration in this frequency band.
On the other hand, a flat type knock sensor (non-resonant type) has the ability to detect vibration in a wider frequency band from about 6 kHz to 15 kHz, and has the following features:

- The engine knocking frequency will change a bit depending on the engine speed. The flat type knock sensor can detect vibration even when the engine knocking frequency is changed. Thus the vibration detection ability is increased compared to the conventional type knock sensor, and a more precise ignition timing control is possible.

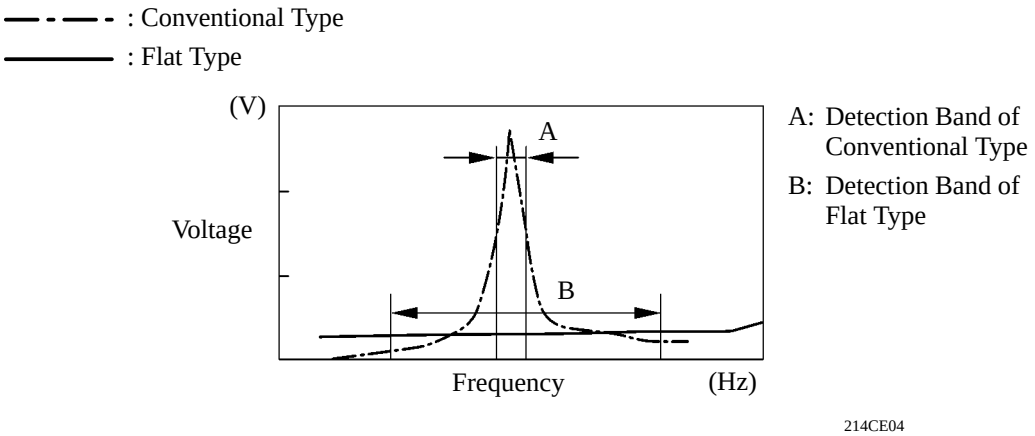

Characteristic of Knock Sensor

2) Construction

- The flat type knock sensor is installed on the engine through the stud bolt installed on the cylinder block. For this reason, a hole for the stud bolt is running through in the center of the sensor.
- Inside of the sensor, a steel weight is located on the upper portion and a piezoelectric element is located under the weight through the insulator.
- The open/short circuit detection resistor is integrated.

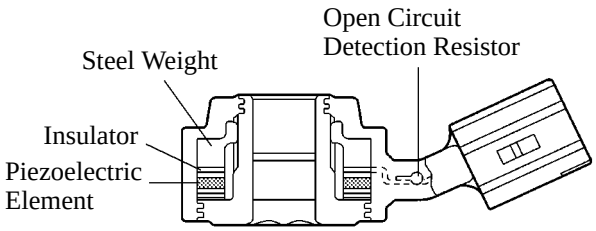

Flat Type Knock Sensor
(Non-Resonant Type)

214CE01

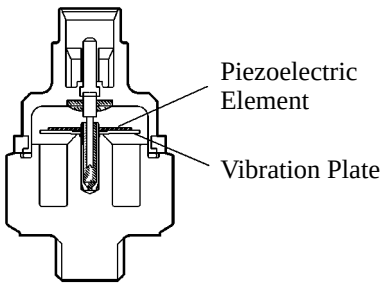

Conventional Type Knock Sensor
(Resonant Type)

214CE02

Downloaded from www.Manualslib.com manuals search engine

3) Operation

The knocking vibration is transmitted to the steel weight and its inertia applies pressure to the piezoelectric element. The action generates electromotive force.

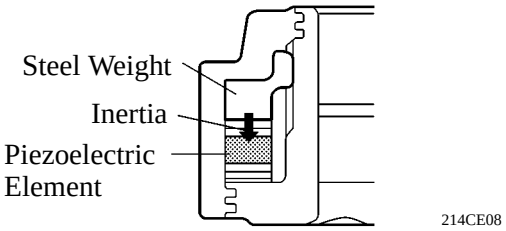

4) Open/Short Circuit Detection Resistor

During the power source is IG-ON, the open/short circuit detection resistor in the knock sensor and the resistor in the THS ECU keep the voltage at the terminal KNK1 of engine constant.
An IC (Integrated Circuit) in the THS ECU is always monitoring the voltage of the terminal KNK1. If the open/short circuit occurs between the knock sensor and the THS ECU, the voltage of the terminal KNK1 will change and the THS ECU detects the open/short circuit and stores DTC (Diagnostic Trouble Code).

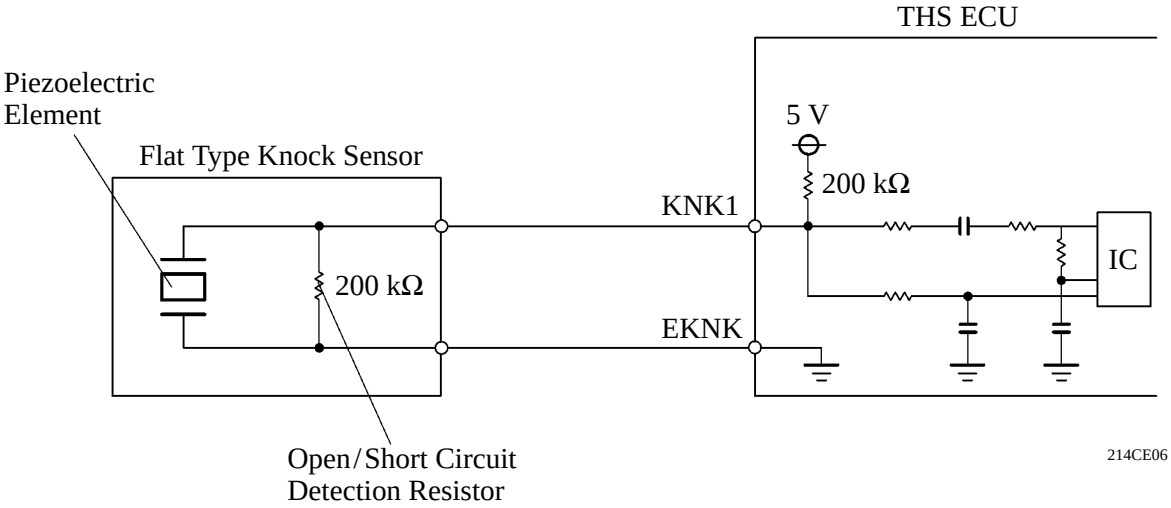

Service Tip

- In accordance with the adoption of open/short circuit detection resistor, the inspection method for the sensor has been changed. For details, refer to 2007 Camry Hybrid Vehicle Repair Manual (Pub. No. RM02H0U).
- To prevent the water accumulation in the connector, make sure to install the flat type knock sensor in the position as shown in the following illustration.

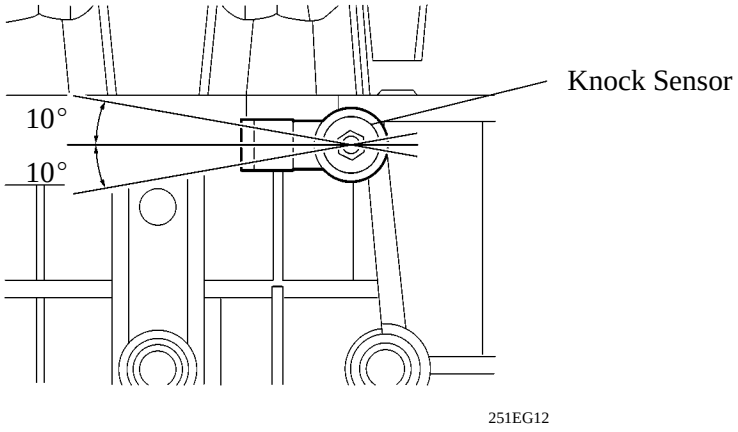

Downloaded from www.Manualslib.com manuals search engine

Heated Oxygen Sensor and Air Fuel Ratio Sensor

1) General

- The heated oxygen sensor and the air fuel ratio sensor differ in output characteristics.
- The output voltage of the heated oxygen sensor changes in accordance with the oxygen concentration in the exhaust gas. The THS ECU uses this output voltage to determine whether the present air-fuel ratio is richer or leaner than the stoichiometric air-fuel ratio.
- Approximately 0.4 V is constantly applied to the air-fuel ratio sensor, which outputs an amperage that varies in accordance with the oxygen concentration in the exhaust gas. The THS ECU converts the changes in the output amperage into voltage in order to linearly detect the present air-fuel ratio.

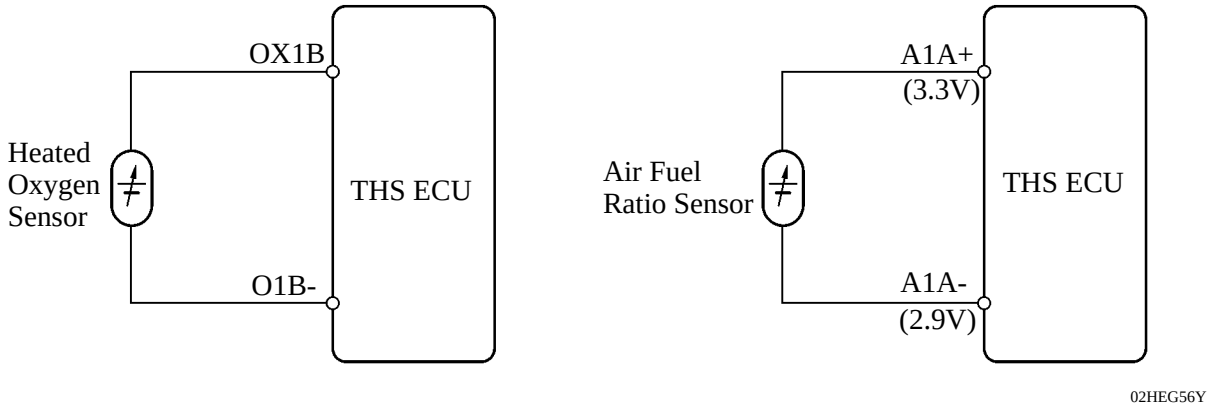

Heated Oxygen Sensor Circuit **Air Fuel Ratio Sensor Circuit**

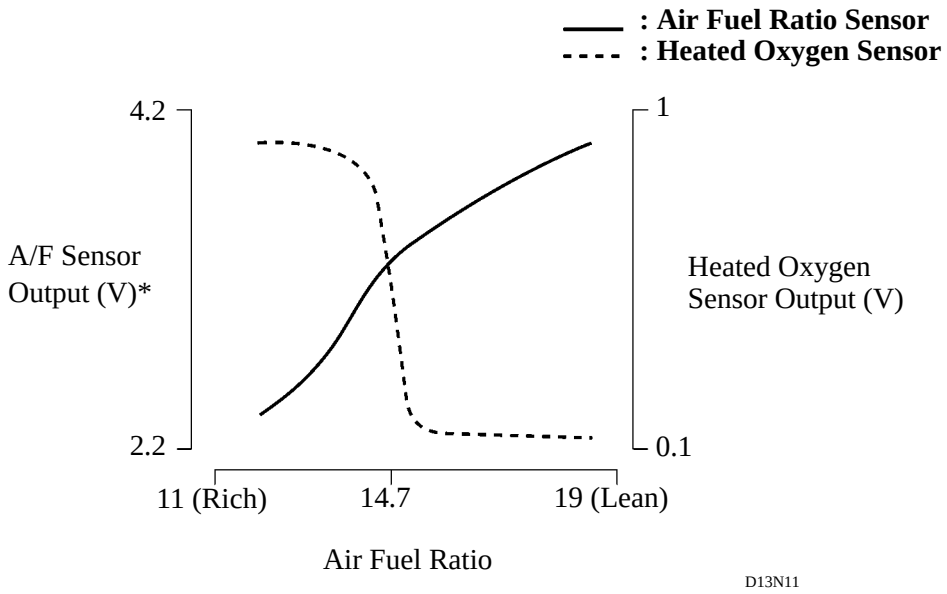

*: This calculation value is used internally in the THS ECU, and is not an THS ECU terminal voltage.

Downloaded from www.Manualslib.com manuals search engine

2) Construction

- The basic construction of the heated oxygen sensor and the air-fuel ratio sensor is the same. However, they are divided into the cup type and the planar type, according to the different types of heater construction that are used.
- The cup type sensor contains a sensor element that surrounds a heater.
- The planar type sensor uses alumina, which excels in heat conductivity and insulation, to integrate a sensor element with a heater, thus improving the warm-up performance of the sensor.

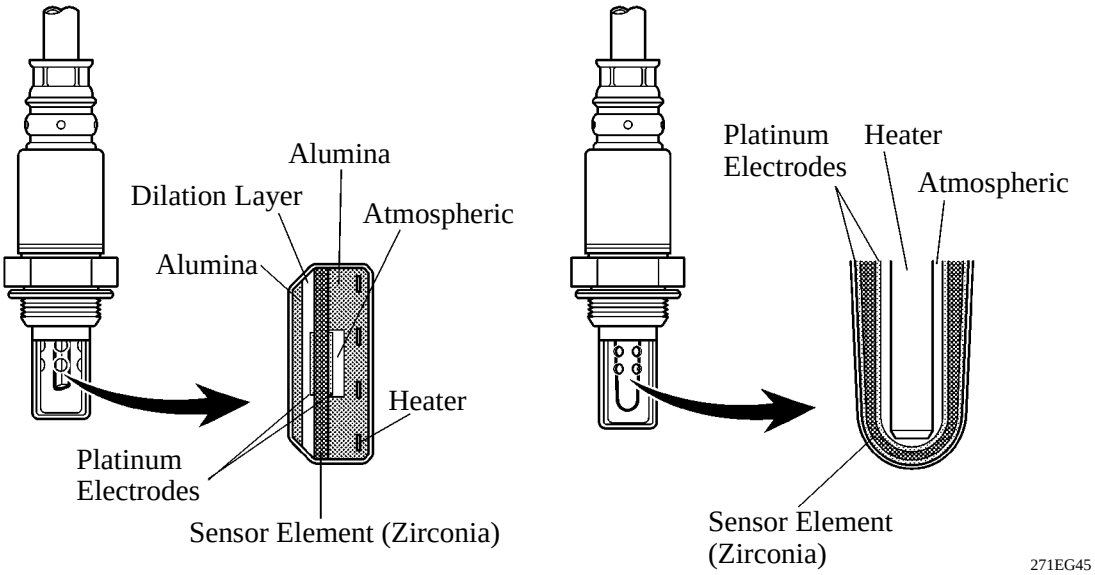

Planar Type Air Fuel Ratio Sensor **Cup Type Heated Oxygen Sensor**

Downloaded from www.Manualslib.com manuals search engine

6. ETCS-i (Electronic Throttle Control System-intelligent)

General

- In the conventional throttle body, the throttle valve angle is determined invariably by the amount of the accelerator pedal effort. In contrast, ETCS-i uses the THS ECU to calculate the optimal throttle valve angle that is appropriate for the respective driving condition and uses a throttle control motor to control the angle.
- In case of an abnormal condition, this system transfers to the limp mode.

▶ System Diagram ◀

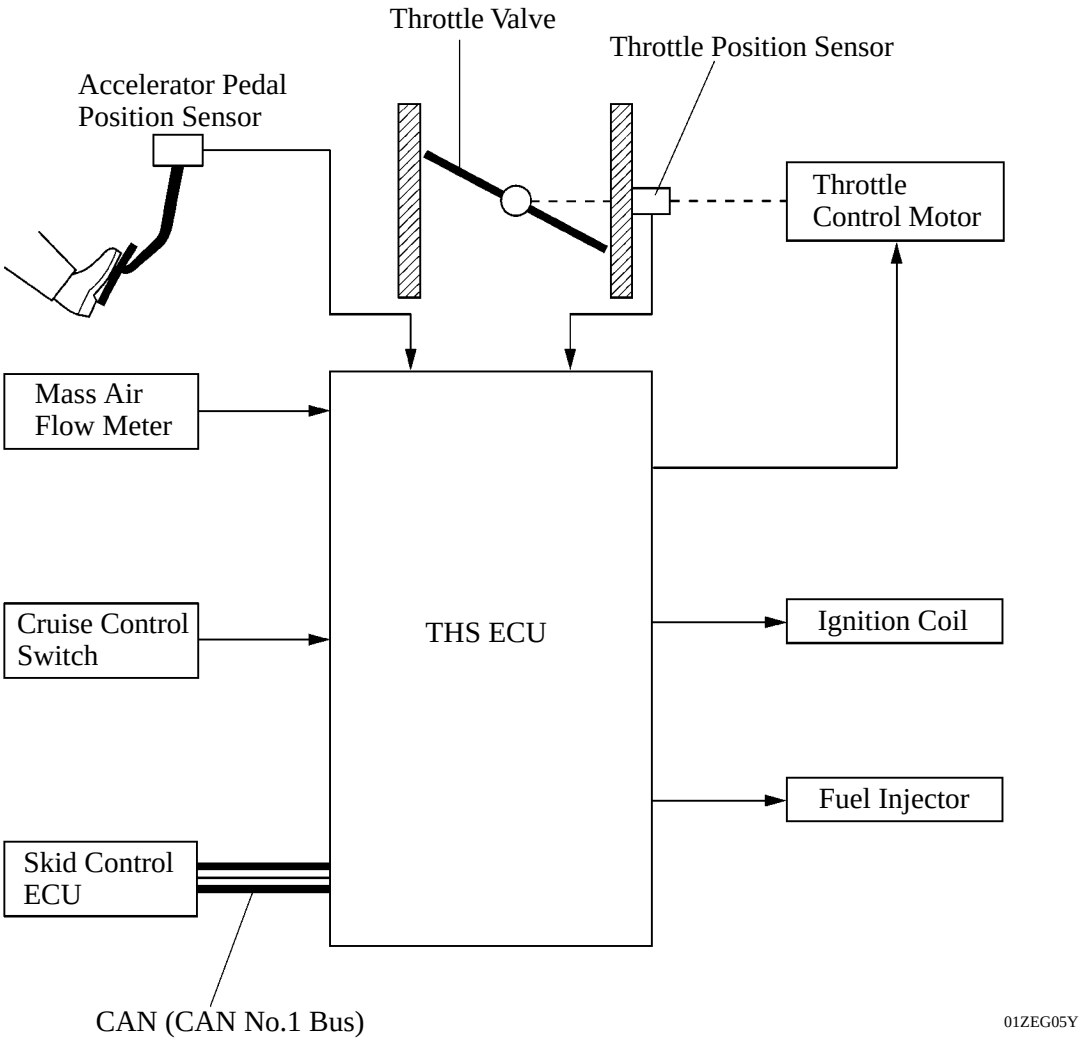

Downloaded from www.Manualslib.com manuals search engine

Control

1) General

The ETCS-i consists of the following four functions:

- ISC (Idle Speed Control)
- TRAC (Traction Control)
- VSC (Vehicle Stability Control)
- Cruise Control

2) Idle Speed Control

The THS ECU controls the throttle valve in order to constantly maintain an ideal idle speed.

3) TRAC Throttle Control

As part of the TRAC function, the throttle valve is closed by a demand signal from the skid control ECU if an excessive amount of slippage is created at a driving wheel, thus facilitating the vehicle in ensuring excellent vehicle stability and motive force.

4) VSC Coordination Control

In order to bring the effectiveness of the VSC function control into full play, the throttle valve angle is controlled by effecting a coordination control with the skid control ECU.

5) Cruise Control

The THS ECU with an integrated cruise control ECU directly actuates the throttle valve for operation of the cruise control.

Downloaded from www.Manualslib.com manuals search engine

7. VVT-i (Variable Valve Timing-intelligent) System

General

- The VVT-i system is designed to control the intake camshaft within a range of 30° (of Crankshaft Angle) to provide valve timing that is optimally suited to the engine condition. This improves torque in all the speed ranges as well as increasing fuel economy, and reducing exhaust emissions.

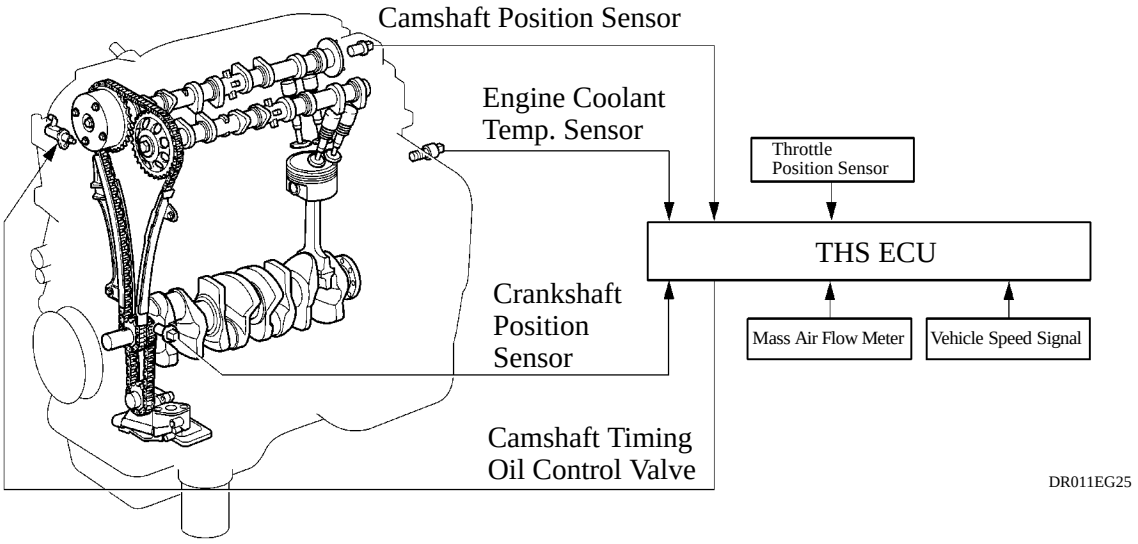

- Using the engine speed, intake air volume, throttle position and water temperature, the THS ECU can calculate optimal valve timing for each driving condition and controls the camshaft timing oil control valve. In addition, the THS ECU uses signals from the camshaft position sensor and the crankshaft position sensor to detect the actual valve timing, thus providing feedback control to achieve the target valve timing.

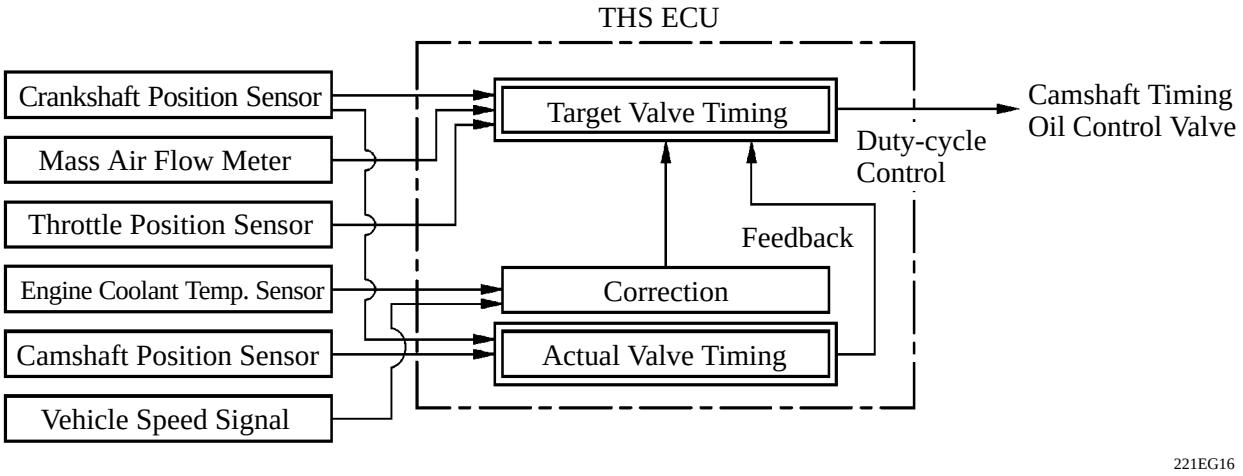

Downloaded from www.Manualslib.com manuals search engine

Effectiveness of the VVT-i System

Operation State	Objective	Effect
● During Idling ● At Light Load	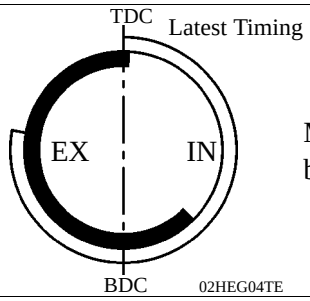 Minimizing overlap to prevent blow back to the intake side	● Stabilized idling rpm ● Better fuel economy
At Medium Load	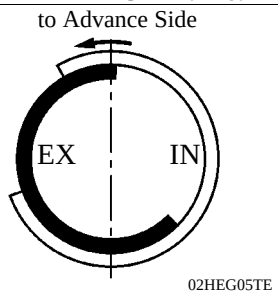 Increasing overlap to increase internal EGR to reduce pumping loss	● Better fuel economy ● Improved emission control
In Low to Medium Speed Range with Heavy Load	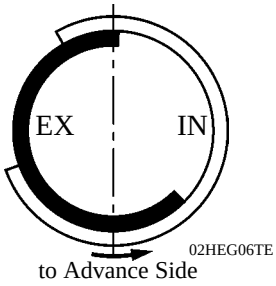 Advancing the intake valve close timing for volumetric efficiency improvement	Improved torque in low to medium speed range
In High Speed Range with Heavy Load	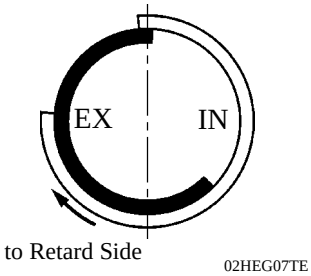 Retarding the intake valve close timing for volumetric efficiency improvement	Improved output
At Low Temp.	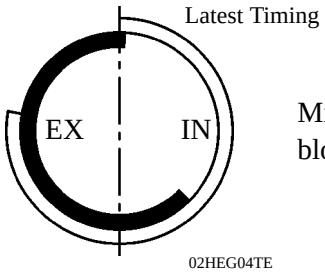 Minimizing overlap to prevent blow back to the intake side	● Stabilized fast idle rpm ● Better fuel economy
● Upon Starting ● Stopping the Engine	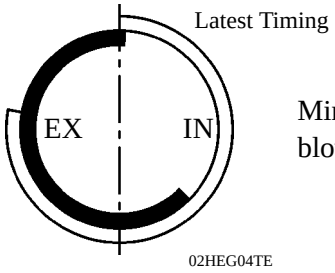 Minimizing overlap to prevent blow back to the intake side	Improved startability

Downloaded from www.Manualslib.com manuals search engine

Construction

1) VVT-i Controller

- This controller consists of the housing driven from the timing chain and the vane coupled with the intake camshaft.
- The oil pressure sent from the advance or retard side path at the intake camshaft causes rotation in the VVT-i controller vane circumferential direction to vary the intake valve timing continuously.
  When the engine is stopped, the intake camshaft will be in the most retarded state to ensure startability.
  When hydraulic pressure is not applied to the VVT-i controller immediately after the engine has been started, the lock pin locks the movement of the VVT-i controller to prevent a knocking noise.

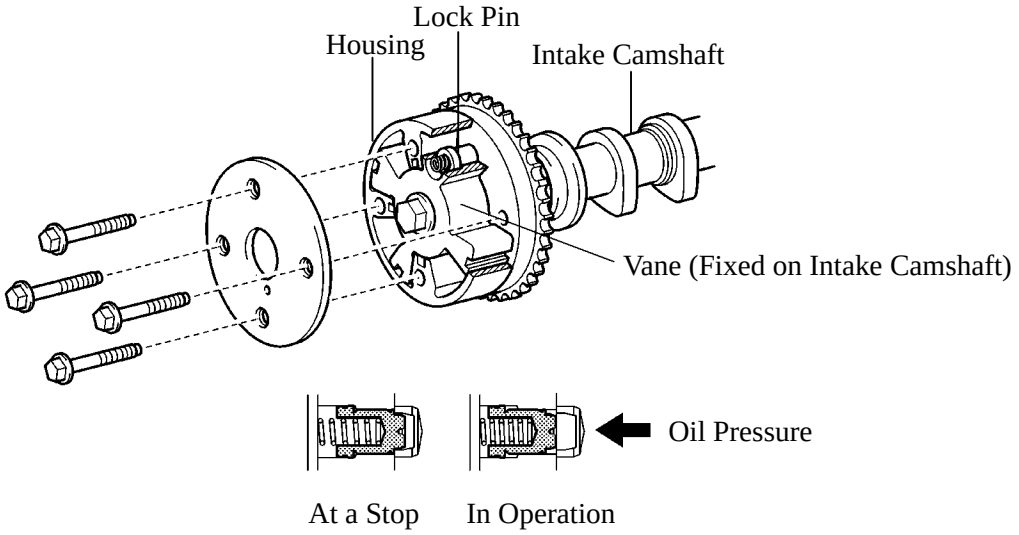

169EG36

Lock Pin

2) Camshaft Timing Oil Control Valve

The camshaft timing oil control valve controls the spool valve position in accordance with the duty control from the THS ECU thus allocating the hydraulic pressure that is applied to the VVT-i controller to the advance and the retard side. When the engine is stopped, the camshaft timing oil control valve is in the most retarded state.

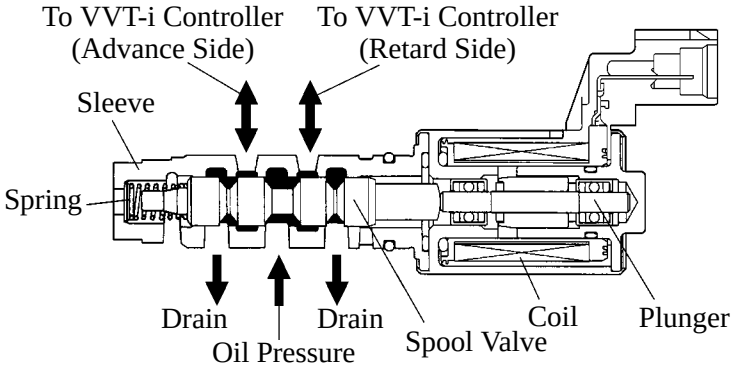

221EG17

Downloaded from www.Manualslib.com manuals search engine

Operation

1) Advance

When the camshaft timing oil control valve is positioned as illustrated below by the advance signal from the THS ECU, the resultant oil pressure is applied to the timing advance side vane chamber to rotate the camshaft in the timing advance direction.

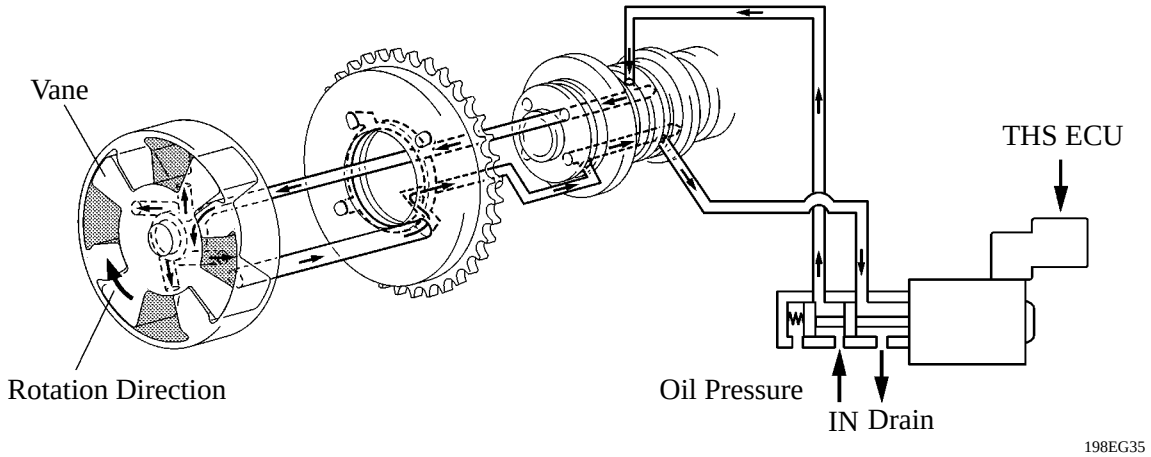

2) Retard

When the camshaft timing oil control valve is positioned as illustrated below by the retard signal from the THS ECU, the resultant oil pressure is applied to the timing retard side vane chamber to rotate the camshaft in the timing retard direction.

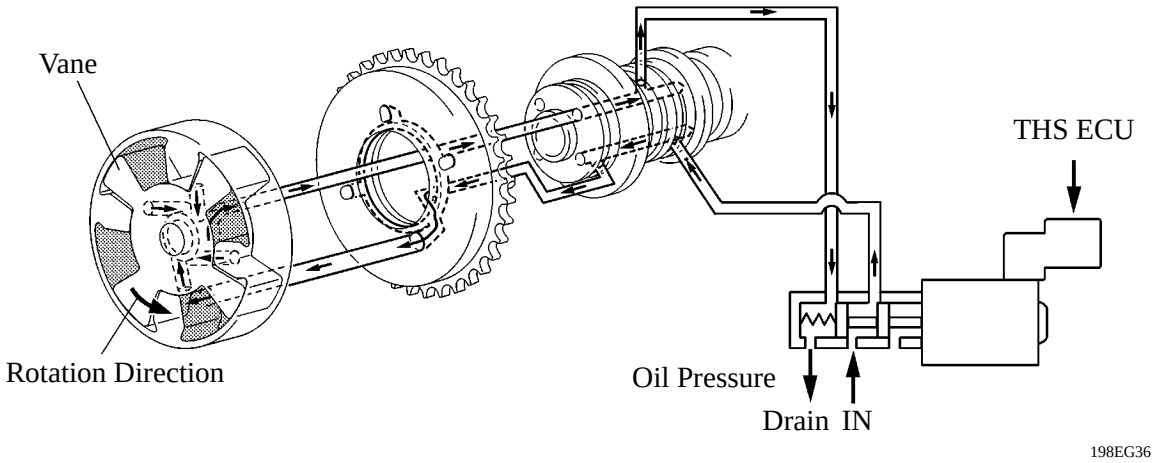

3) Hold

After reaching the target timing, the valve timing is held by keeping the camshaft timing oil control valve in the neutral position unless the traveling state changes. This adjusts the valve timing at the desired target position and prevents the engine oil from running out when it is unnecessary.

Downloaded from www.Manualslib.com manuals search engine

8. Fuel Pump Control

A fuel cut control is used to stop the fuel pump once when any of the SRS airbags is deployed. In this system, the airbag deployment signal from the airbag sensor assembly is detected by the THS ECU, and it turns OFF the circuit opening relay. After the fuel cut control has been activated, turning the power source from OFF to IG-ON cancels the fuel cut control, and the engine can be restarted.

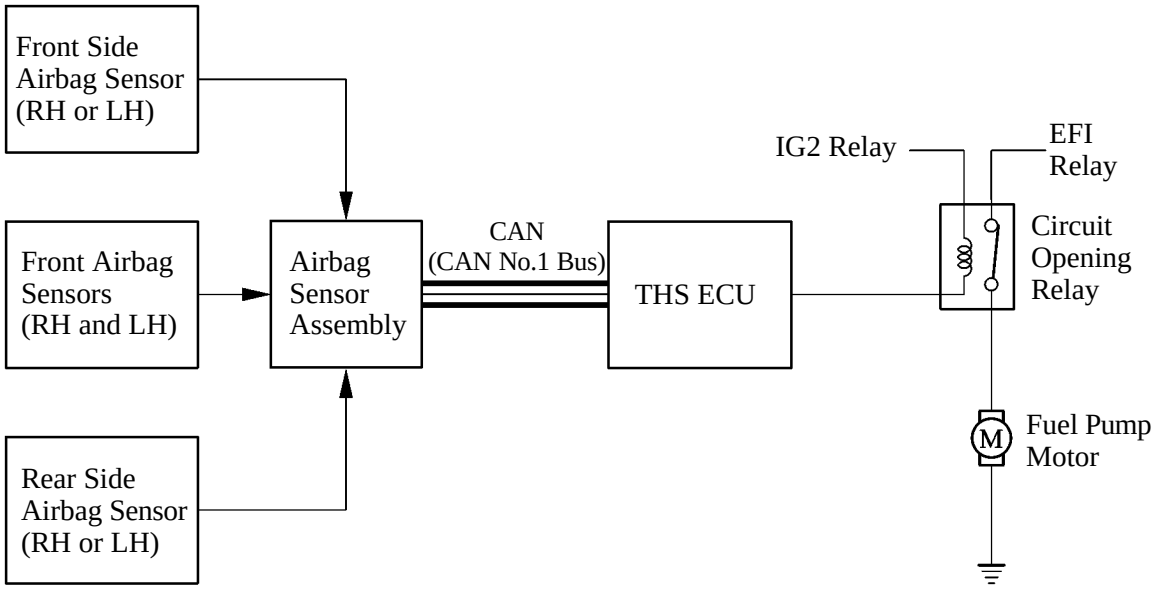

02HEG20TE

Downloaded from www.Manualslib.com manuals search engine

9. Cooling Fan Control System

- A cooling fan control system in which the THS ECU controls the cooling fan speed in accordance with the engine coolant temperature, inverter water temperature and the air conditioning operating condition.
- The THS ECU controls the cooling fan speed based on A/C pressure sensor signal, inverter water temperature signal and engine coolant temperature sensor signals. This control is accomplished by operating the 2 fan motors in 2 stages at low speed (series connection) and high speed (parallel connection).

▶ Wiring Diagram ◀

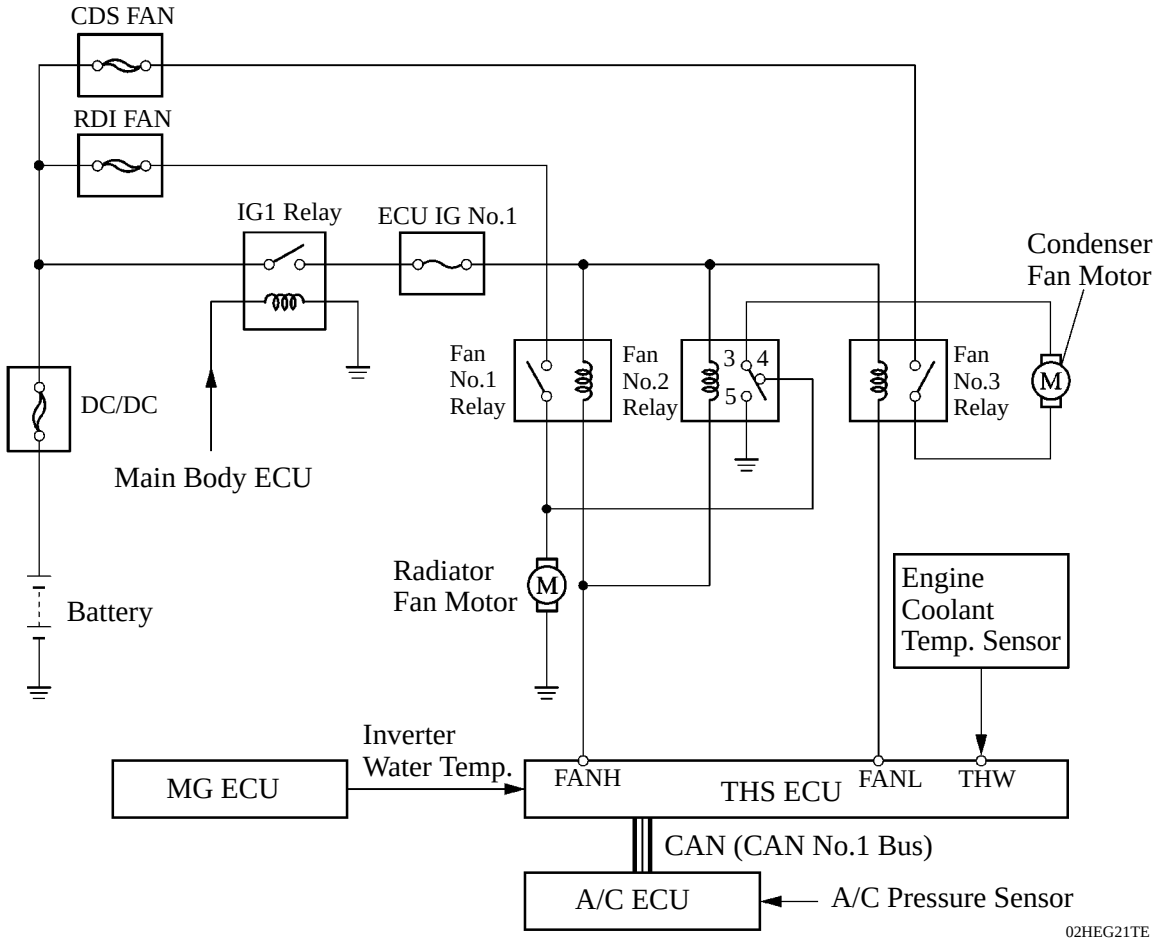

▶ Cooling Fan Operation ◀

Air Conditioning Operating Condition	Engine Coolant Temp.	Inverter Water Temp.	Relay Operation No.1	Relay Operation No.2	Relay Operation No.3	Cooling Fan Motor Connection	Cooling Fan Operation
OFF	Low	Low	OFF	3 to 4	OFF	OFF	OFF
	High	Low	ON	3 to 5	ON	Parallel	High
	High	High					
A/C Pressure “Low”	Low	Low	OFF	3 to 4	ON	Series	Low
A/C Pressure “Low”	High	Low	ON	3 to 5	ON	Parallel	High
	High	High					
A/C Pressure “High”	High	Low	ON	3 to 5	ON	Parallel	High
	High	High					

Downloaded from www.Manualslib.com manuals search engine

10. Evaporative Emission Control System

General

- The evaporative emission control system on the ’07 Camry Hybrid model consists of the fuel vapor-containment system (to prevent fuel vapor escaping into the atmosphere), the purge flow control (to purge fuel vapor), and the EVAP leak check (to check for leakage from the evaporative emission control system).
- The fuel vapor-containment system prevents the fuel vapor from escaping from the fuel tank when the engine is stopped (and the vehicle is parked).
- THS II controls the engine to make it operate intermittently, making the operation time of the engine shorter than that of conventional gasoline engine models. Due to the engine being unable to burn the fuel vapor sufficiently, the fuel vapor that is created exceeds the capacity of normal-sized canisters. Therefore, the fuel vapor-containment system releases the fuel vapor from the fuel tank only when the engine is running, and burns it in the engine, in order to comply with the AT-PZEV emission regulations.

Evaporative Emission Control	Outline
Fuel Vapor-containment System	● When the vehicle is parked (with engine stopped), the system closes the fuel vapor-containment valve to seal the fuel tank. ● For refueling, the system opens the fuel vapor-containment valve, allowing the fuel vapor to be absorbed by the canister and reducing the pressure in the fuel tank. ● When the engine is operating, the system controls the fuel vapor-containment valve to release the fuel vapor and effect purge flow control.
Purge Flow Control	Opens the purge VSV when the engine is running, allowing the engine vacuum to draw the fuel vapor absorbed by the canister and burn it in the engine.
	The THS ECU opens the fuel vapor-containment valve when the purge VSV is open and the internal pressure of the fuel tank is high. Thus, the fuel vapor in the fuel tank and the fuel vapor absorbed by the canister are drawn into the engine to be burned.
EVAP Leak Check	When the engine is stopped, the THS ECU operates the canister pump module to perform a leak check in the evaporative emission control system and check the functions of the parts.
	Depending on the internal pressure of the fuel tank, the THS ECU performs two types of leak check operations: ● When the internal pressure of the fuel tank is equal to the atmospheric pressure. ● When the internal pressure of the fuel tank is higher [3 kPa (0.03 kgf/cm^2, 0.44 psi) minimum] or lower [-2 kPa (0.02 kgf/cm^2, -0.29 psi) maximum] than the atmospheric pressure.

Downloaded from www.Manualslib.com manuals search engine

▶ System Diagram ◀

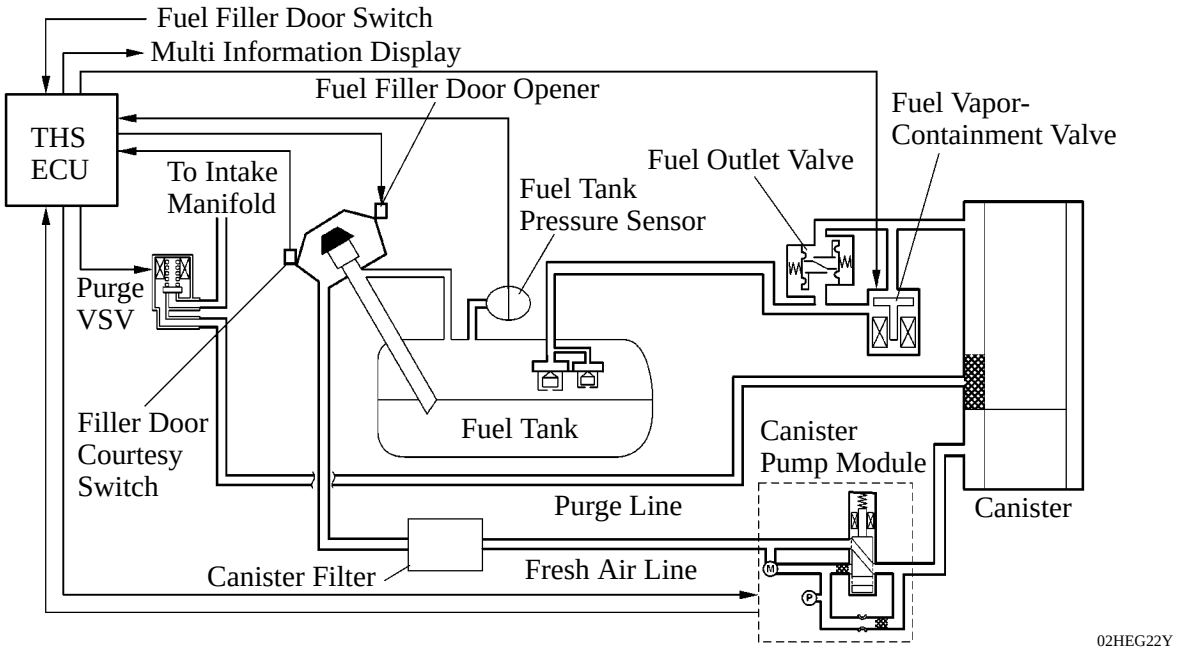

Layout of Main Components

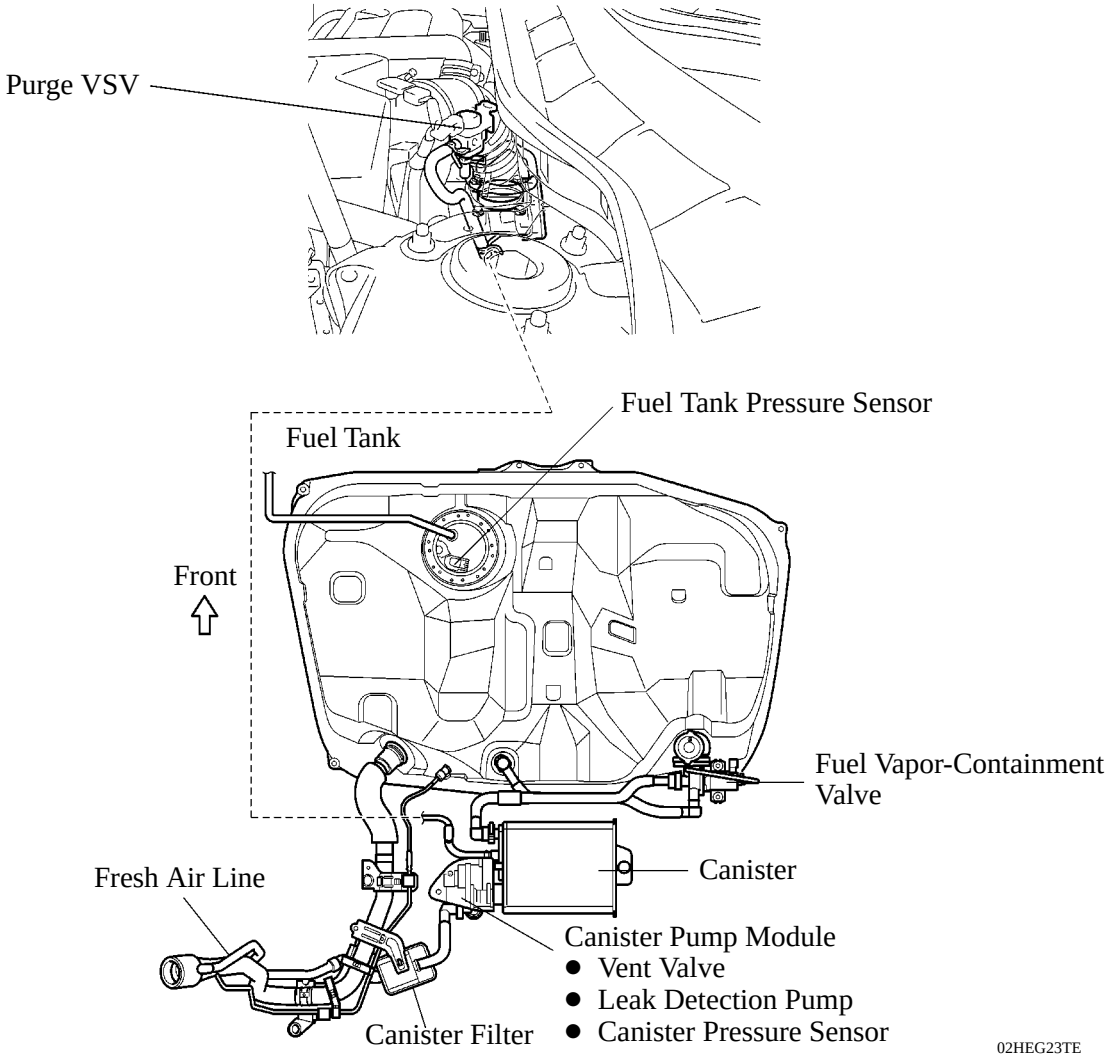

Downloaded from www.Manualslib.com manuals search engine

Function of Main Components

Operation	Component		Function
Fuel Vapor-containment System	Fuel Tank Pressure Sensor		Detects the internal pressure of the fuel tank and sends a signal to the THS ECU.
	Fuel Vapor-Containment Valve		Opens or closes in accordance with a signal provided by the THS ECU, in order to seal the fuel tank or release its internal pressure.
	Fuel Filler Door Opener		● Consists of a built-in motor that opens the fuel filler door via a linkage. ● If the fuel filler door opener malfunctions, the fuel filler door can be opened manually by pulling the fuel filler door lock shaft that is provided on the fuel filler door opener.
	Filler Door Courtesy Switch		Transmits an ON/OFF signal that indicates whether the fuel filler door is open or closed.
	Multi-information Display		Provided in the combination meter, displays information concerning refueling.
	Canister		Contains activated charcoal to absorb the fuel vapor that is created in the fuel tank and during refueling.
Purge Flow Control	Purge VSV		Opens in accordance with the signals from the THS ECU when the system is purging, in order to send the fuel vapor that was absorbed by the canister into the intake manifold. In system monitoring mode, this valve controls the introduction of the vacuum into the fuel tank.
EVAP Leak Check	Canister Pump Module	Vent Valve	Opens and closes the fresh air line in accordance with the signals from the THS ECU.
		Leak Detection Pump	Applies vacuum pressure in the evaporative emission control system in accordance with the signals from the THS ECU.
		Canister Pressure Sensor	Detects the pressure in the evaporative emission control system and sends the signals to the THS ECU.
All	THS ECU		● Determines the results of the canister pump module's system leak check, effects purge control through the fuel vapor-containment valve and the purge VSV, and controls the internal pressure of the fuel tank. ● Monitors the system for any leakage and outputs a DTC if a malfunction is found.

Downloaded from www.Manualslib.com manuals search engine

Construction and Operation

1) Fuel Vapor-Containment Valve

- Installed between the fuel tank and the canister, the fuel vapor-containment valve consists of a solenoid valve that turns ON/OFF to seal the fuel tank or release its internal pressure. This valve is normally closed.
- In addition to the solenoid valve, this valve contains a fuel outlet valve. When the solenoid valve malfunctions or is inoperative with the power source mode OFF, the fuel outlet valve opens to release pressure if the internal pressure becomes higher than standard.

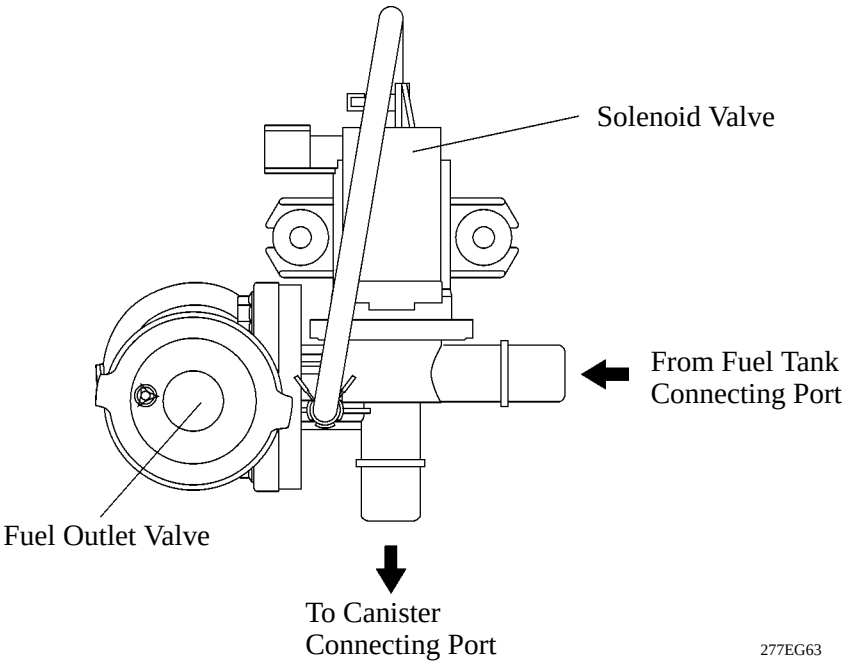

▶ System Diagram ◀

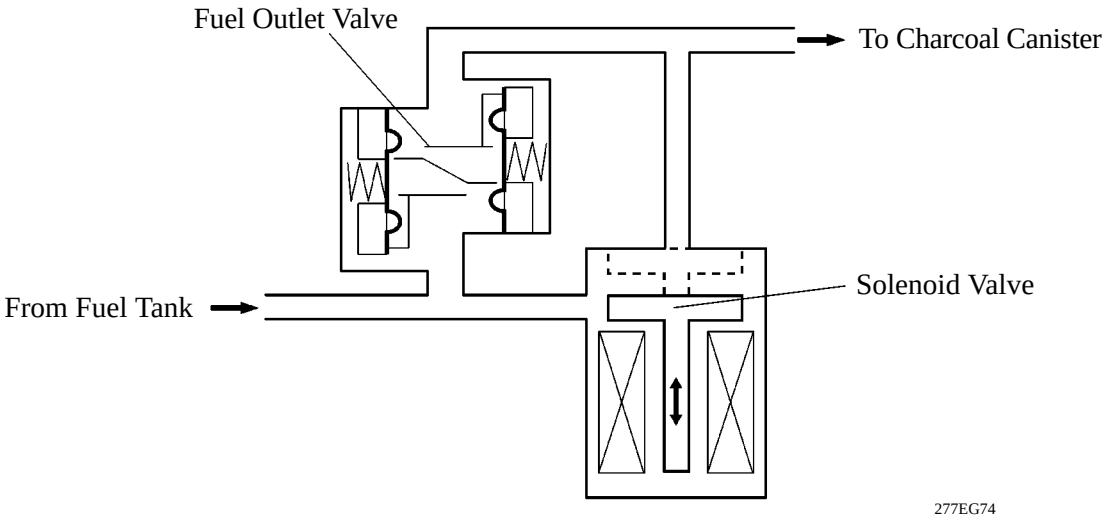

Downloaded from www.Manualslib.com manuals search engine

2) Fuel Filler Door Opener

- The fuel filler door opener consists of an electric motor, worm gear, fuel filler door lock gear, and fuel filler door lock shaft.
- The rotational movement of the electric motor is converted into a sliding movement of the fuel filler door lock shaft by the worm gear and the fuel filler door lock gear. This movement pulls on the fuel filler door lock cable, causing the fuel filler door to open. If the fuel filler door does not open due to a malfunction in this mechanism, the fuel filler door can be opened by operating (pulling) the fuel filler door lock shaft from inside the trunk.

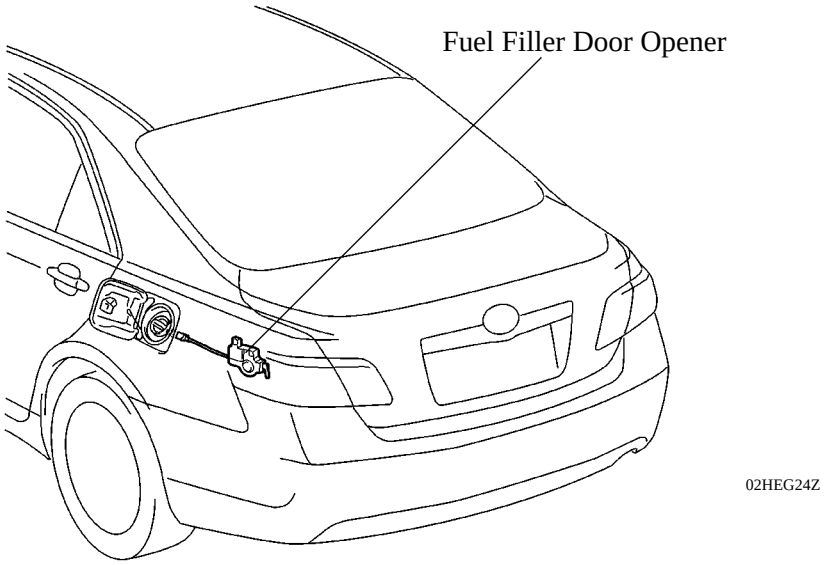

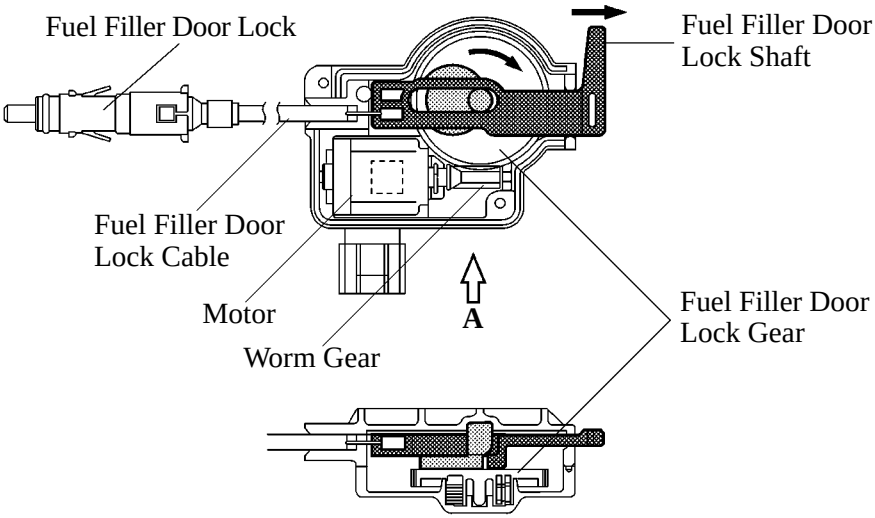

View from A 02HEG51Y

CAUTION

When the fuel filler door opener works properly, do not operate the fuel filler door manually by operating the fuel filler door lock shaft. If the fuel filler door is opened manually, the THS ECU does not open the fuel vapor-containment valve, and the pre-release of the internal fuel tank pressure does not take place. Therefore, the internal pressure of the fuel tank may remain high. Opening the fuel cap or refueling the fuel tank in this state could cause fuel to overflow from the filler inlet. For this reason, be extremely careful when opening the fuel cap or refueling.

Downloaded from www.Manualslib.com manuals search engine

3) Filler Door Courtesy Switch

The fuel filler door courtesy switch, which is mounted on the inside of the fuel filler door, determines whether the fuel filler door is open or closed by way of the ON (open) or OFF (closed) state of the switch.

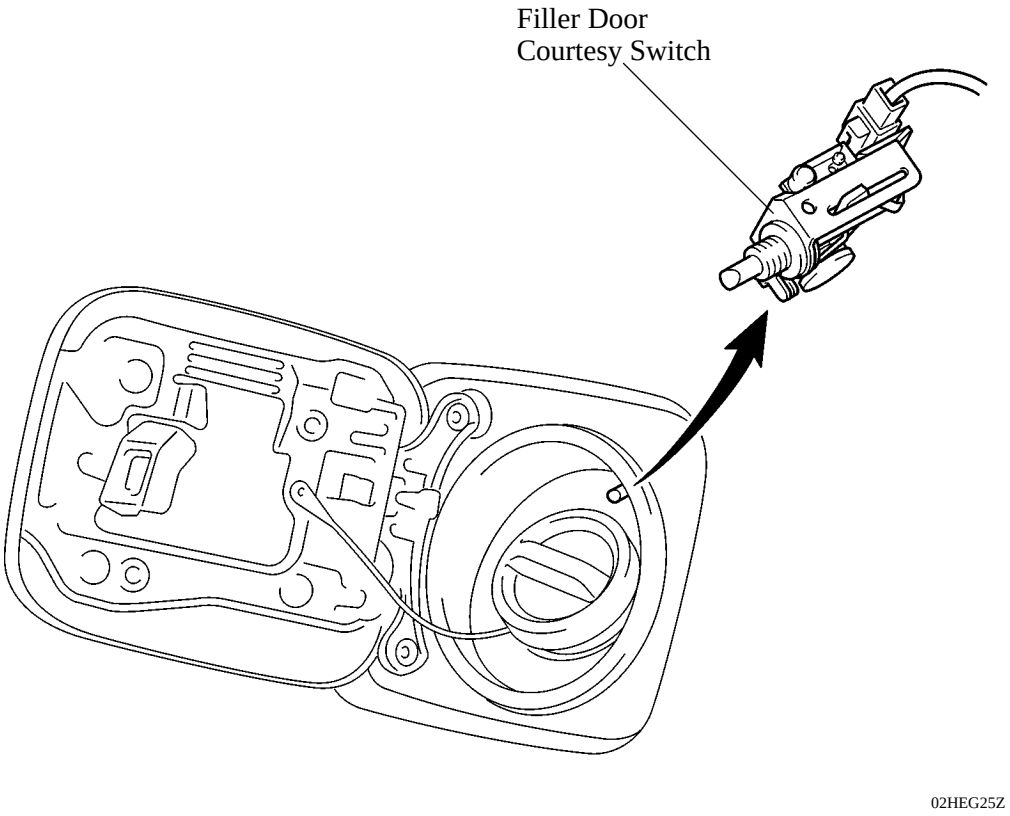

Downloaded from www.Manualslib.com manuals search engine

4) Multi-information Display

- In this system, if the internal pressure of the fuel tank is high before the fuel filler door is opened by turning the fuel filler door switch ON, the THS ECU opens the fuel vapor-containment valve to release the fuel vapor. Thus, it reduces the internal pressure of the fuel tank to a level close to the atmospheric pressure. While the pressure is being released, information shown in the table below will appear on the multi-information display of the combination meter. Thus, it informs the driver of the standby state from the time the fuel filler door switch is pressed until the fuel filler door opens.
- In addition, this display informs the driver that the fuel filler door is open.

Multi-information Display Indication	Indication Condition
 02HEG26Y	The standby state that the pressure is being released from the fuel tank appears on the display under the following conditions: ● The fuel filler door switch is ON and the fuel vapor-containment valve is open. ● The internal pressure of the fuel tank is higher than the atmospheric pressure. ● After the fuel filler door switch has been turned ON, the ten bars illuminate every second. If it takes longer than 9 seconds, the nine bars will remain illuminated.
 02HEG27Y	The refueling-ready state appears on the display under the following conditions: ● Fuel vapor-containment valve ON ● The internal pressure of the fuel tank is near the atmospheric pressure.
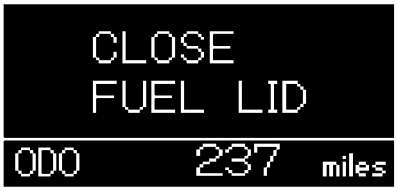 02HEG28Y	If one of the conditions described below has been met while the fuel filler door is open, the fuel filler door open state appears on the display. ● The vehicle speed is higher than 50km/h (31 mph) and the vehicle has traveled more than 1 km (0.6 miles). ● 30 minutes have elapsed since the fuel vapor-containment valve was opened.

Downloaded from www.Manualslib.com manuals search engine

5) Canister

- The canister absorbs the fuel vapor during refueling standby or purge flow control.
- In addition to the conventional canister construction, this canister contains a purge buffer, which uses highly concentrated activated charcoal, in front of the purge side port. The function of the purge buffer is to moderate the concentrated fuel vapor that is discharged from the fuel tank when the fuel vapor-containment valve is open.

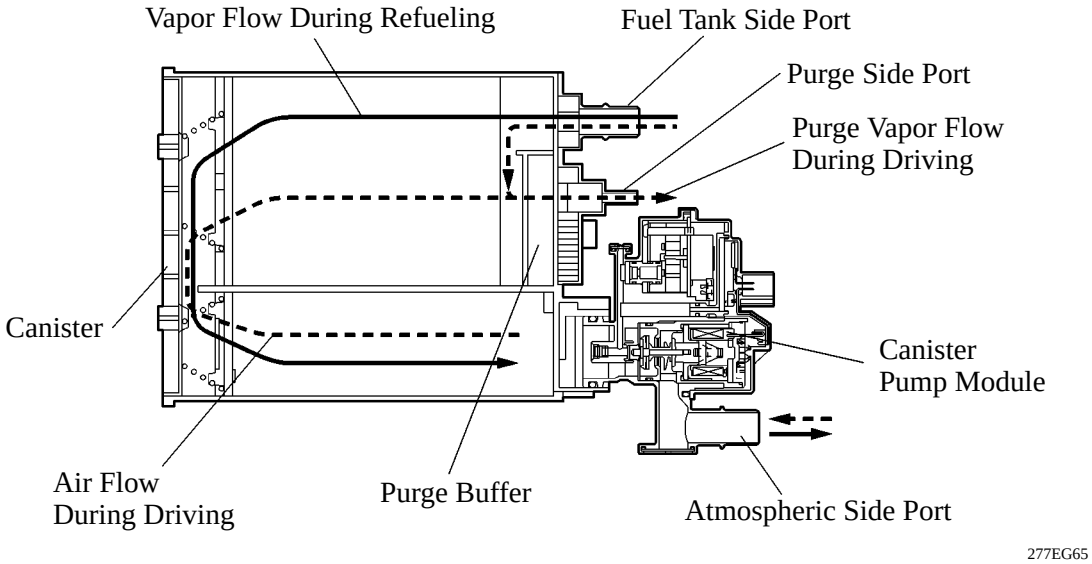

Downloaded from www.Manualslib.com manuals search engine

6) Canister Pump Module

- The canister pump module is used for checking the fuel pipe, canister, and fuel tank for leakage, and for checking the functions of the parts.
- Canister pump module consists of the vent valve, canister pressure sensor, leak detection pump, and pump motor.
- The pump motor, which is a brushless DC motor, drives the leak detection pump. This leak detection pump is a vane type.
- When the EVAP leak check function is operating, the canister pump module actuates the vent valve and the leak detection pump in accordance with the signals received from the THS ECU, in order to create a vacuum in the fuel tank, canister, and pipes of the evaporative emission control system.
- The canister pressure sensor detects the pressure of the evaporative emission control system during a leak check, and sends a signal to the THS ECU.

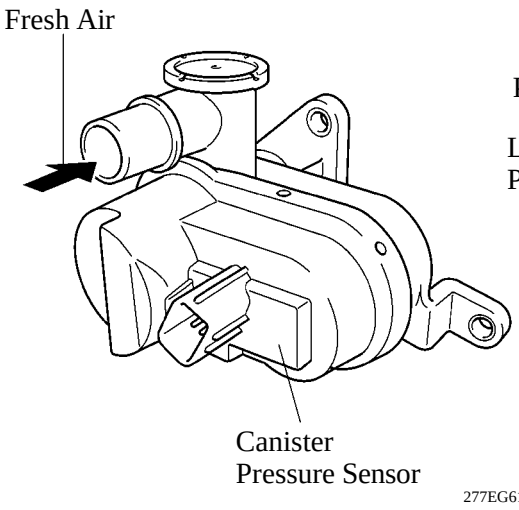

277EG61

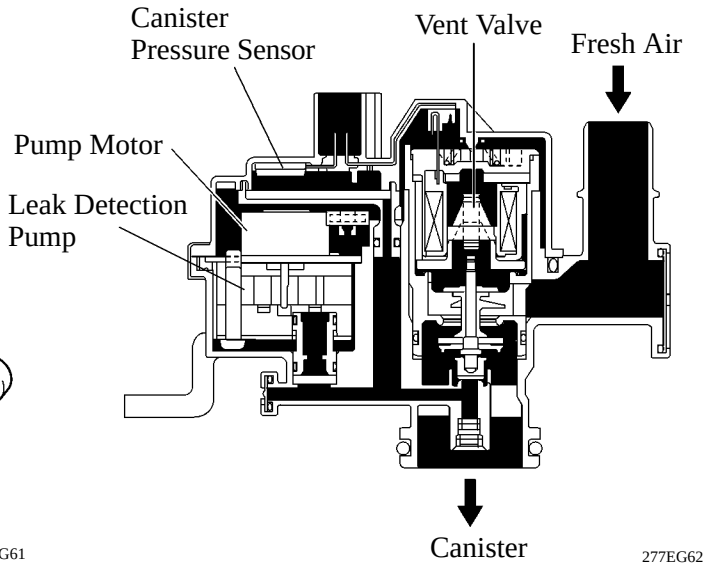

277EG62

▶ Simple Diagram ◀

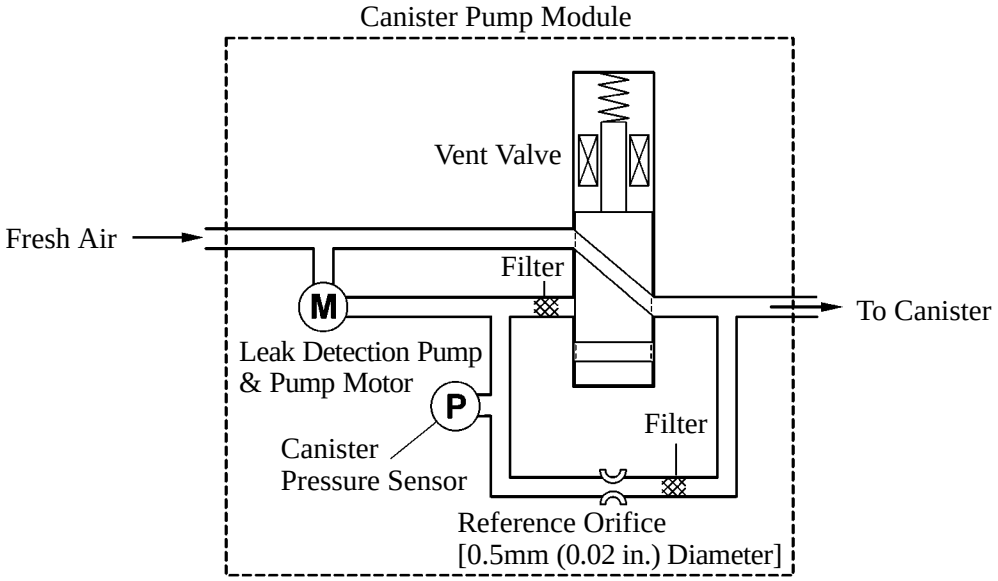

02HEG53Y

Downloaded from www.Manualslib.com manuals search engine

System Operation

1) Fuel Vapor-containment System

a. Parked (Power Source Mode OFF)

The THS ECU seals the fuel vapor in the fuel tank by closing the fuel vapor-containment valve. If, at this time, the internal pressure of the fuel tank increases to a level that activates the fuel outlet valve located in the fuel vapor-containment valve, the fuel outlet valve opens to release the internal pressure of the fuel tank. This prevents the internal pressure in the fuel tank from increasing abnormally.

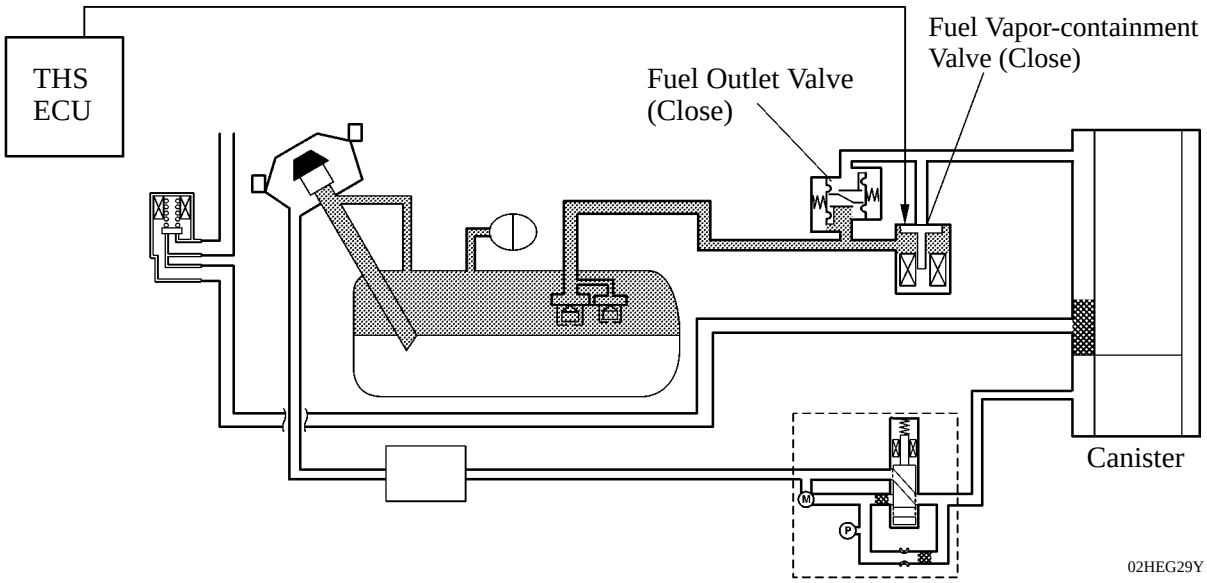

b. Refueling Wait

When the fuel filler door switch is turned ON, the THS ECU opens the fuel vapor-containment valve, allowing the fuel vapor to be absorbed by the canister and reducing the pressure in the fuel tank. The fuel filler door will not open unless the internal pressure of the fuel tank decreases to a level close to the atmospheric pressure. In addition, the multi-information display will show the “PLEASE WAIT NOW OPENING”.

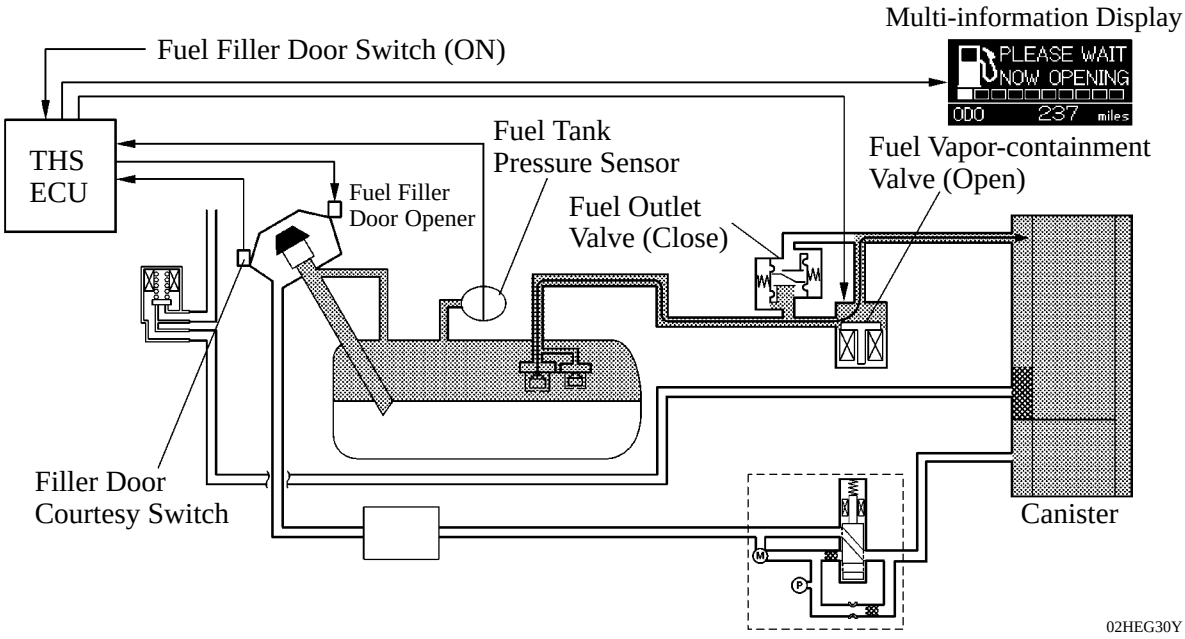

Downloaded from www.Manualslib.com manuals search engine

c. Refueling Ready

- When the internal pressure of the fuel tank decreases to a level close to the atmospheric pressure, the THS ECU opens the fuel filler door. At this time, the multi-information display will show the "REFUEL READY". Because the THS ECU keeps the fuel vapor-containment valve open during refueling, the fuel vapor that is created during refueling passes through the fuel vapor-containment valve and becomes absorbed by the canister. When the fuel filler door is closed after refueling, the fuel vapor-containment valve closes, in order to seal the fuel tank.
- If 30 minutes elapse after the fuel filler door is opened, the THS ECU closes the fuel vapor-containment valve and seals the fuel tank in order to prevent the fuel vapor from escaping, even if the fuel filler door is not closed.

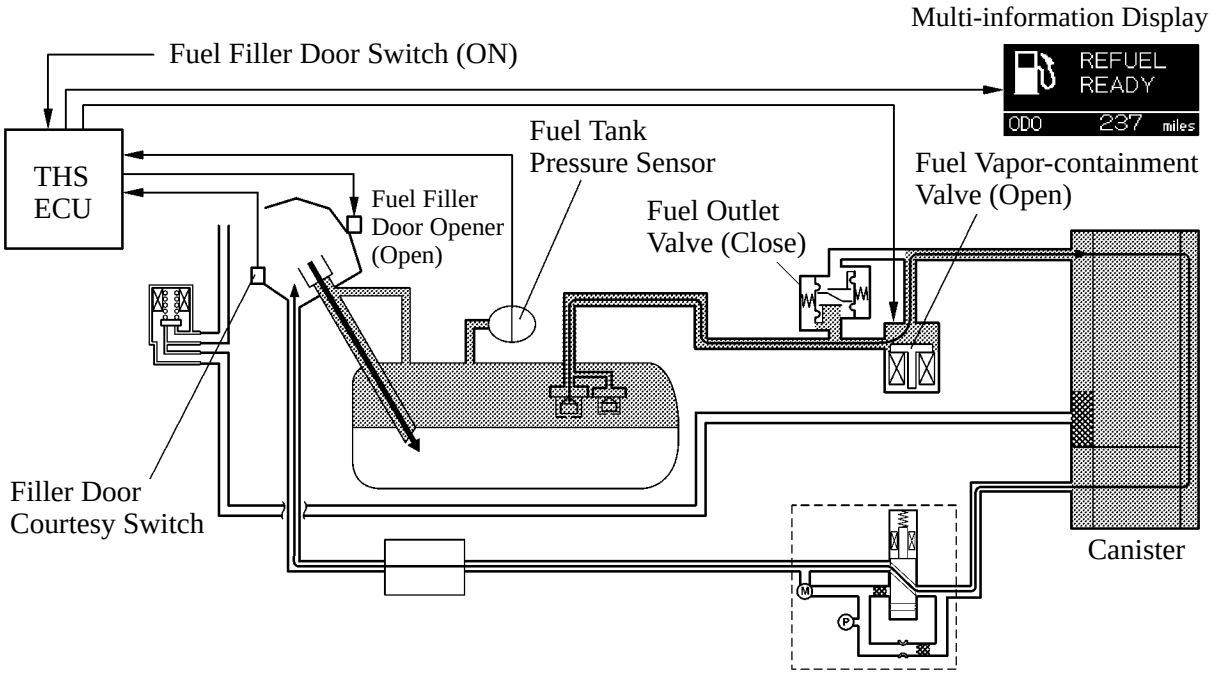

02HEG31Y

Downloaded from www.Manualslib.com manuals search engine

d. Fuel Filler Door Open Warning

If one of the conditions listed below has been met while the fuel filler door is open, the THS ECU will show a “CLOSE FUEL LID” warning message on the multi-information display to warn the driver.

- The vehicle speed is higher than 50km/h (31 mph) and the vehicle has traveled more than 1 km (0.6 miles).
- 30 minutes have elapsed since the fuel vapor-containment valve was opened.

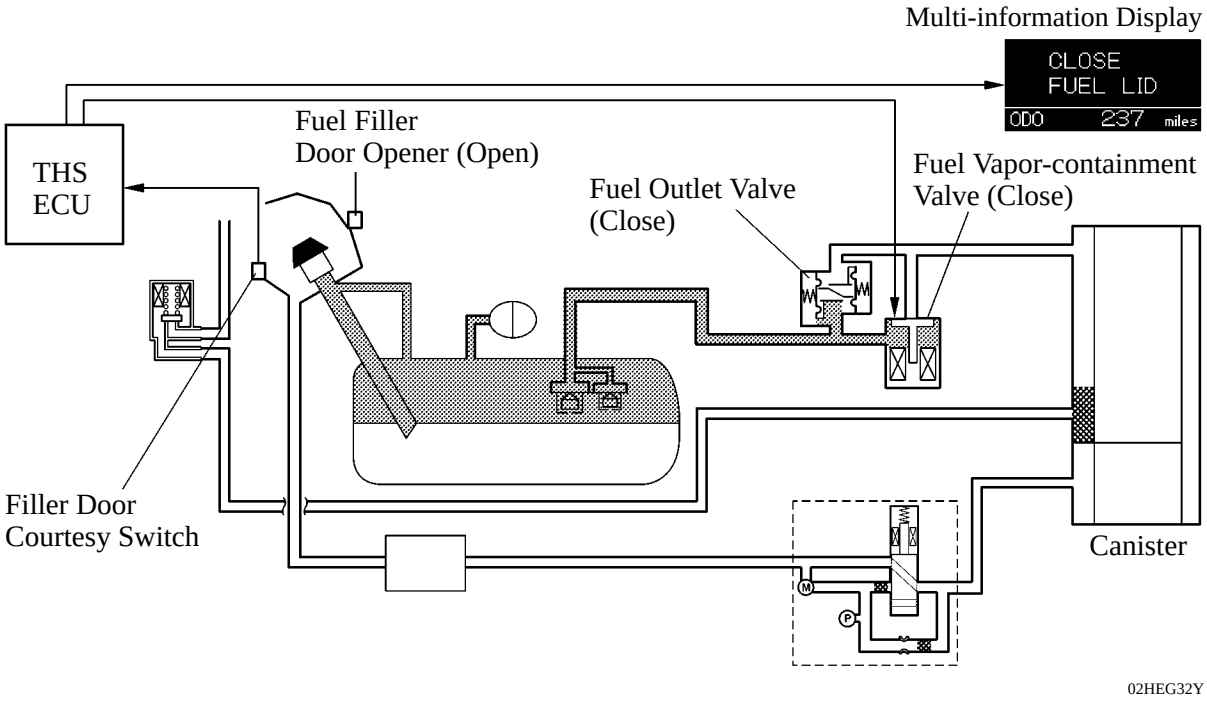

Downloaded from www.Manualslib.com manuals search engine

2) Purge Flow Control

a. General

- When the engine has satisfied predetermined conditions (closed loop, engine coolant temp. above 70°C [162°F], etc), stored fuel vapor is purged in the canister whenever the purge VSV is opened by the THS ECU. The THS ECU will change the duty ratio cycle of the purge VSV, thus controlling purge flow volume. Purge flow volume is determined by intake manifold pressure and the duty ratio cycle of the purge VSV. Atmospheric pressure is allowed into the canister to ensure that purge flow is constantly maintained whenever purge vacuum is applied to the canister.
- Due to the adoption of a fuel vapor-containment system, purge flow performs two types of operations, depending on the internal pressure of the fuel tank.

b. Fuel Tank Internal Pressure is Near Atmospheric Pressure

If the internal pressure in the fuel tank is near the atmospheric pressure, the THS ECU will not open the fuel vapor-containment valve even if the purge VSV is open. At this time, the fuel vapor that is absorbed in the canister is drawn inside the engine and burned.

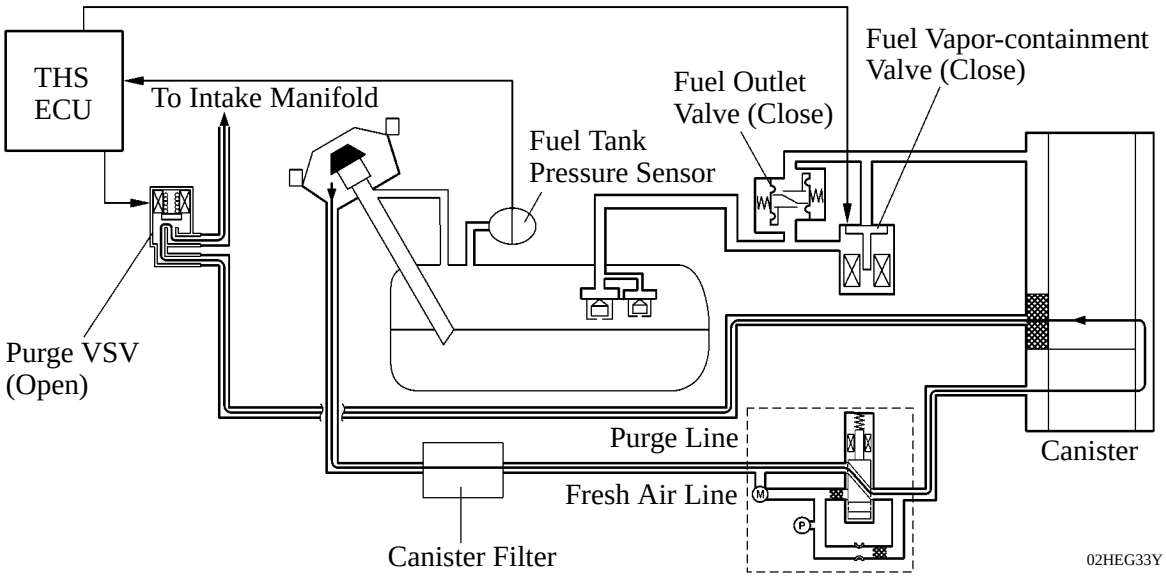

Downloaded from www.Manualslib.com manuals search engine

c. Fuel Tank Internal Pressure is High

If the internal pressure in the fuel tank is high and the purge VSV is open, the THS ECU opens the fuel vapor-containment valve in order to release the pressure from the fuel tank. At this time, the fuel vapor that is absorbed in the canister is drawn inside the engine by intake vacuum and burned.

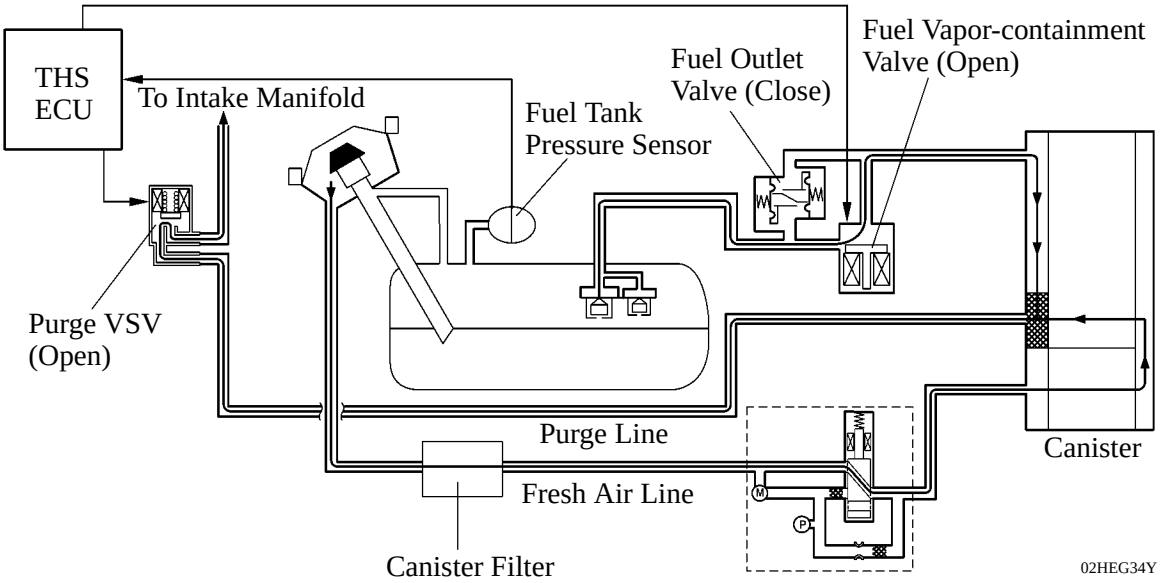

Downloaded from www.Manualslib.com manuals search engine

3) EVAP Leak Check

a. General

- The following are the typical conditions for enabling an EVAP leak check:

Typical Enabling Condition	● 5 hour have elapsed after the engine has been turned OFF.* ● Altitude: Below 2400 m (8000 feet) ● Auxiliary Battery Voltage: 10.5 V or more ● Power Source Mode: OFF ● Engine Coolant Temperature: 4.4 to 35°C (40 to 95°F) ● Intake Air Temperature: 4.4 to 35°C (40 to 95°F)

*: If engine coolant temperature does not drop below 35°C (95°F), this time should be extended to 7 hours. Even after that, if the temperature is not less than 35°C (95°F), the time should be extended to 9.5 hours.

- The THS ECU performs EVAP leak checks through two types of judgment methods.

a) When the internal pressure in the fuel tank is equal to the atmospheric pressure:

- The THS ECU actuates the leak detection pump to introduce a vacuum into the fuel pipe and canister, in order to check for leakage and check the functions of the parts.
- The THS ECU actuates the leak detection pump and opens the fuel vapor-containment valve to introduce a vacuum into the fuel tank, in order to check the fuel tank for leakage and determine whether the fuel vapor-containment valve is stuck closed.

b) When the internal pressure in the fuel tank is higher or lower than the atmospheric pressure:

- If the internal pressure of the fuel tank is high or low, the THS ECU determines that there is no leakage in the fuel tank, based on the holding state of the internal pressure in the fuel tank.
- The THS ECU actuates the leak detection pump to introduce a vacuum into the fuel pipe and canister, in order to check for leakage and check the functions of the parts.
- With the leak detection pump stopped, the THS ECU opens the fuel vapor-containment valve to introduce the internal pressure of the fuel tank into the fuel pipe and the canister, in order to determine whether the fuel vapor-containment valve is stuck closed.

Service Tip

The canister pump module performs EVAP leak check. This check is done approximately five hours after engine is turned OFF. So you may hear sound coming from underneath the luggage compartment for several minutes. It does not indicate a malfunction.

Downloaded from www.Manualslib.com manuals search engine

▶ Fuel Tank Internal Pressure Equals Atmospheric Pressure ◀

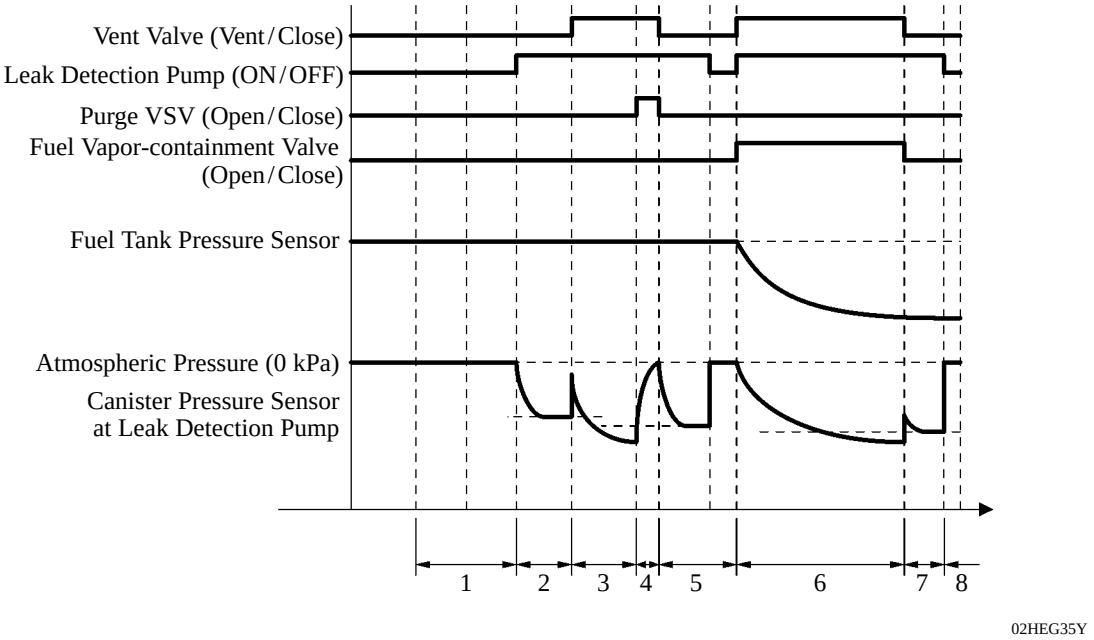

Order	Operation	Description	Time
1	Atmospheric Pressure Measurement	THS ECU turns vent valve OFF (vent) and measures EVAP control system pressure to memorize atmospheric pressure.	10 sec.
2	0.02 in. Leak Pressure Measurement	Leak detection pump creates negative pressure (vacuum) through 0.02 in. orifice and pressure is measured. THS ECU determines this as 0.02 in. leak pressure.	60 sec.
3	Canister Leak Check	Leak detection pump creates negative pressure (vacuum) in canister leak check and canister leak check pressure is measured. If stabilized pressure is larger than 0.02 in. leak pressure, THS ECU determines EVAP control system has leak. If leak detection pump pressure does not stabilize within 15 minutes, THS ECU cancels EVAP monitor.	Within 15 min.
4	Purge VSV Monitor and Fuel Vapor-containment Valve Stuck Closed Judgment	THS ECU opens purge VSV and measures EVAP control system pressure increase. If increase is large, THS ECU interprets this as normal.	10 sec.
5	0.02 in. Leak Pressure Measurement and Format	Leak detection pump creates negative pressure (vacuum) through 0.02 in. orifice and pressure is measured. THS ECU determines this as 0.02 in. leak pressure. THS ECU turns vent valve OFF (vent) and measures canister leak check pressure to memorize atmospheric pressure.	60 sec. and 10 sec.
6	Fuel Vapor-containment Valve Stuck Closed Judgment and Fuel Tank Leakage Judgment	Leak detection pump creates a negative pressure (vacuum) in the fuel tank and the THS ECU measures the pressure at the time the fuel vapor-containment valve is opened.	Approx. 15 min.
7	0.02 in. Leak Pressure Measurement	Leak detection pump creates negative pressure (vacuum) through 0.02 in. orifice and pressure is measured. THS ECU determines this as 0.02 in. leak pressure.	60 sec.
8	Final Check	THS ECU measures atmospheric pressure and records monitor result.	—

Downloaded from www.Manualslib.com manuals search engine

▶ Fuel Tank Internal Pressure High or Low ◀

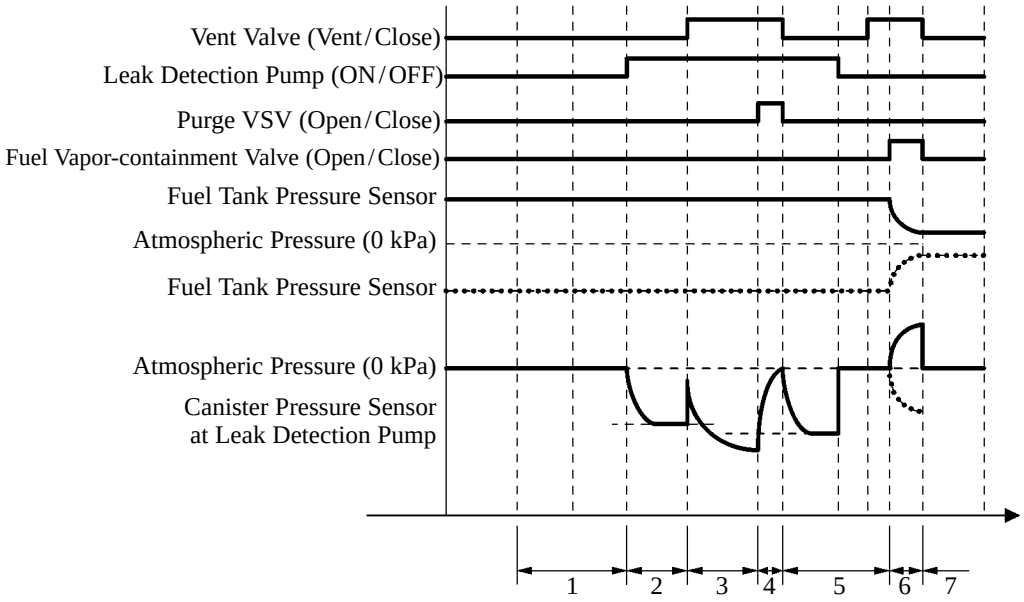

02HEG36Y

Order	Operation	Description	Time
1	Atmospheric Pressure Measurement	THS ECU turns vent valve OFF (vent) and measures EVAP system pressure to memorize atmospheric pressure.	10 sec.
2	0.02 in. Leak Pressure Measurement	Leak detection pump creates negative pressure (vacuum) through 0.02 in. orifice and pressure is measured. THS ECU determines this as 0.02 in. leak pressure.	60 sec.
3	Canister Leak Check	Leak detection pump creates negative pressure (vacuum) in canister leak check and canister leak check pressure is measured. If stabilized pressure is larger than 0.02 in. leak pressure, THS ECU determines EVAP control system has leak. If leak detection pump pressure does not stabilize within 15 minutes, THS ECU cancels EVAP monitor.	Within 15 min.
4	Purge VSV Monitor	THS ECU opens purge valve and measures EVAP control system pressure increase. If increase is large, THS ECU interprets this as normal.	10 sec.
5	0.02 in. Leak Pressure Measurement and Format	Leak detection pump creates negative pressure (vacuum) through 0.02 in. orifice and pressure is measured. THS ECU determines this as 0.02 in. leak pressure. THS ECU turns vent valve OFF (vent) and measures canister leak check pressure to memorize atmospheric pressure.	60 sec. and 10 sec.
6	Fuel Vapor-containment Valve Stuck Closed Judgment	Leak detection pump creates a negative pressure (vacuum) in the fuel tank and the THS ECU measures the pressure at the time the fuel vapor-containment valve is opened.	Approx. 0.1 sec.
7	Final Check	THS ECU measures atmospheric pressure and records monitor result.	—

Downloaded from www.Manualslib.com manuals search engine

b. Atmospheric Pressure Measurement

1) When the power source mode is selected to OFF, the purge VSV and the fuel vapor-containment valve are OFF (close). Therefore, the atmospheric pressure is introduced into the canister.
2) The THS ECU measures the atmospheric pressure through the signals provided by the canister pressure sensor.
3) If the measurement value is out of standards, the THS ECU actuates the leak detection pump in order to monitor the changes in the pressure.
4) If the THS ECU does not detect changes in the pressure, it stops the leak check and store DTC (Diagnostic Trouble Code) P0450, P0451 in its memory.

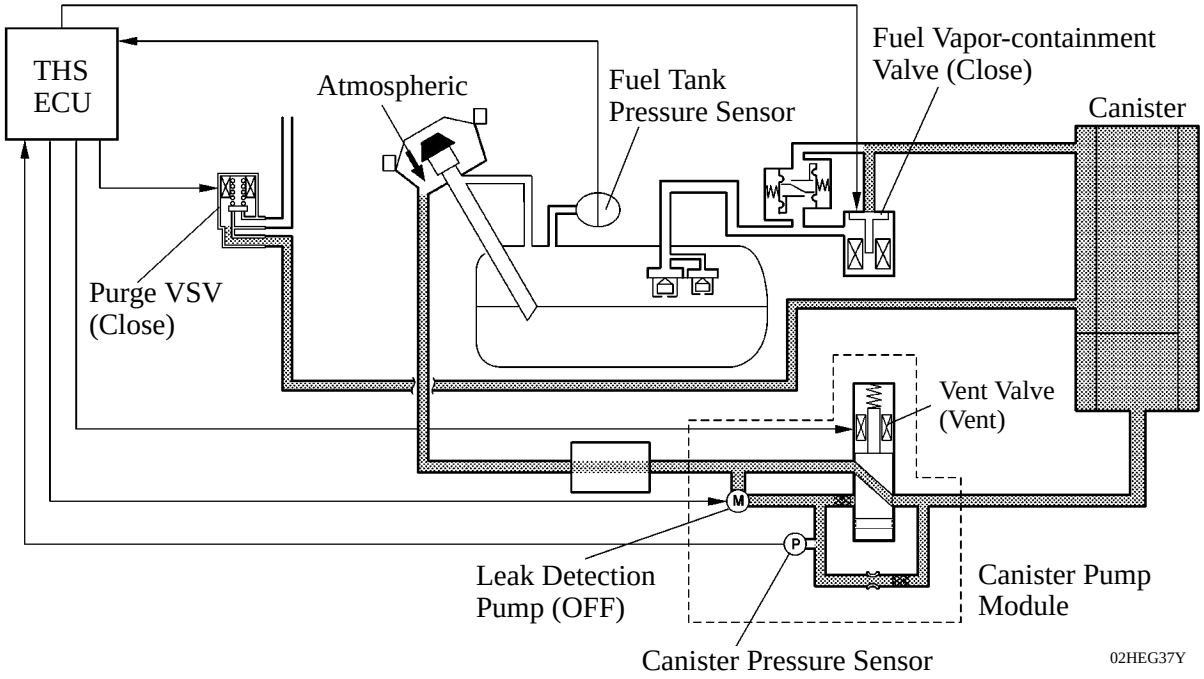

▶ Fuel Tank Internal Pressure Equals Atmospheric Pressure ◀

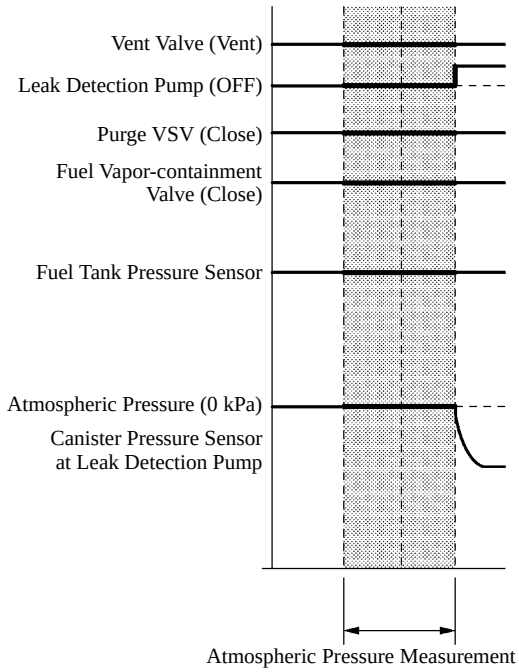

▶ Fuel Tank Internal Pressure High or Low ◀

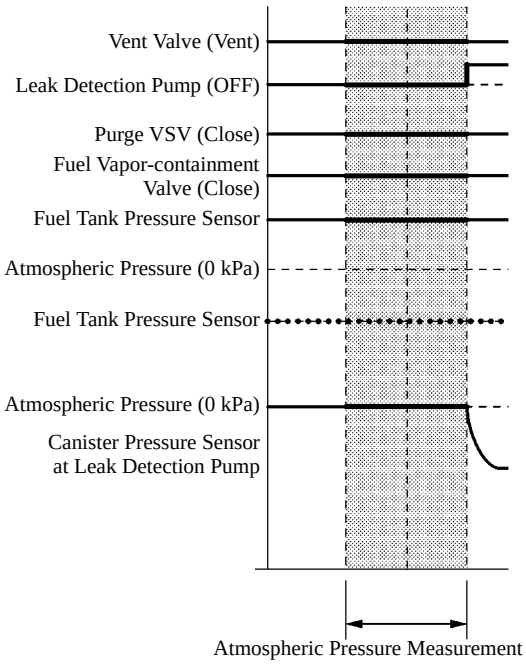

02HEG38Y

Downloaded from www.Manualslib.com manuals search engine

c. 0.02 in. Leak Pressure Measurement

1) The THS ECU turns OFF (vent) the vent valve, introduces atmospheric pressure into the canister, and actuates the leak detection pump, in order to create a negative pressure.
2) At this time, the pressure will not decrease beyond a predetermined level due to the atmospheric pressure that enters through a 0.02 in orifice.
3) The THS ECU compares the logic value and this pressure, and stores it as a 0.02 in. leak pressure in its memory.
4) If the measurement value is below the standard, the THS ECU will determine that the reference orifice is clogged and store DTC P043E in its memory.
5) If the measurement value is above the standard, the THS ECU will determine that a high flow rate of pressure is passing through the 0.02 in. orifice and store DTC P043F, P2401 and P2402 in its memory.

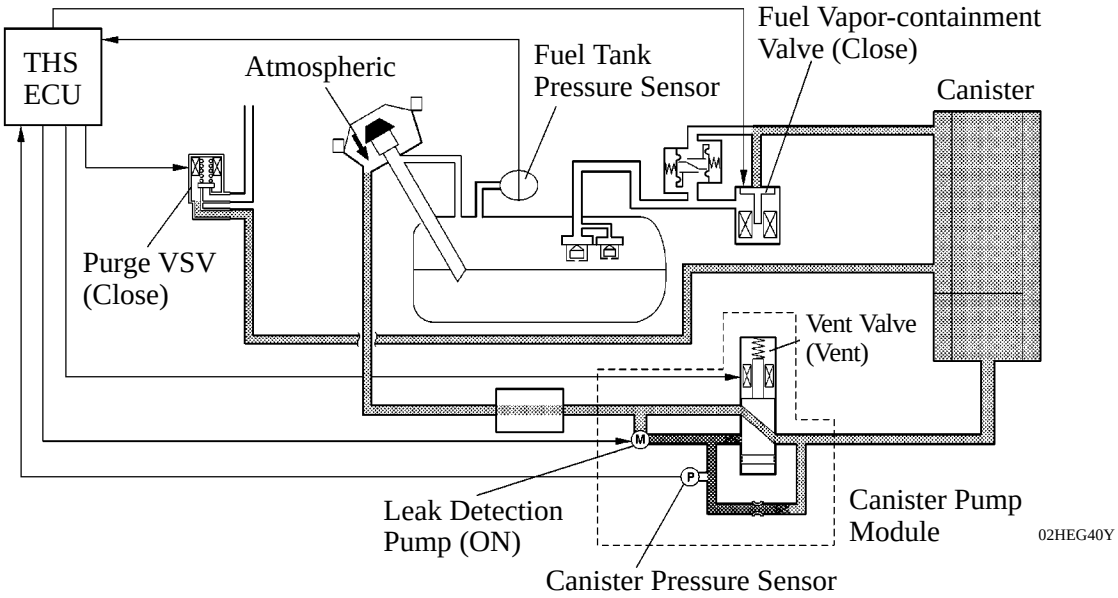

▶ Fuel Tank Internal Pressure Equals Atmospheric Pressure ◀

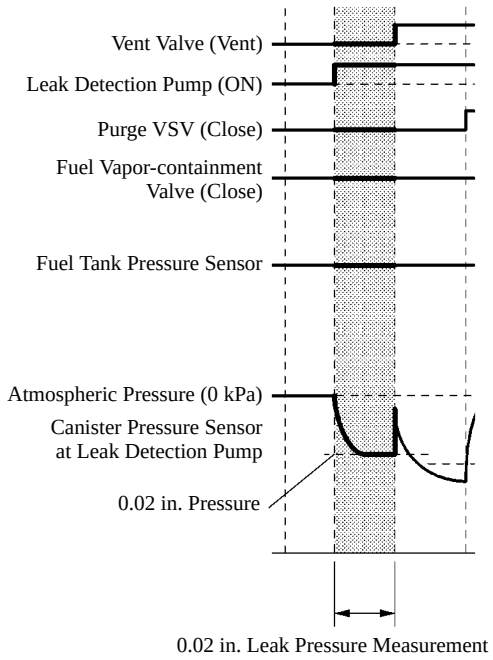

▶ Fuel Tank Internal Pressure High or Low ◀

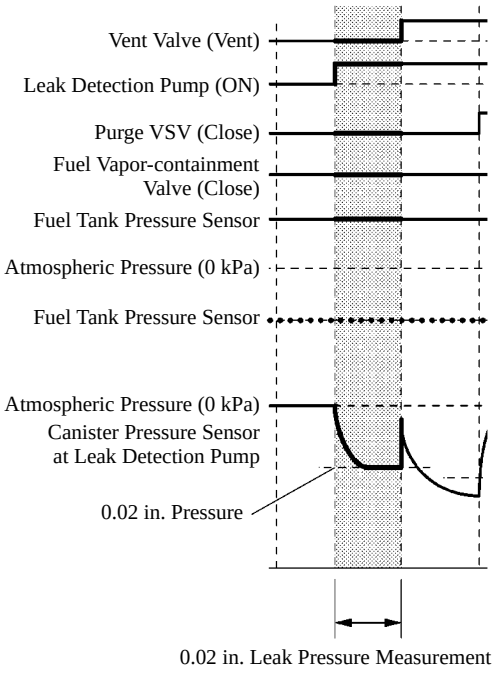

02HEG39Y

Downloaded from www.Manualslib.com manuals search engine

d. Canister Leak Check

1) During the leak detection pump actuation, the THS ECU turns ON (close) the vent valve in order to introduce a vacuum into the canister.
2) When the pressure in the system stabilizes, the THS ECU compares this pressure with the 0.02 in. pressure in order to check for a leakage.
3) If the detection value is below the 0.02 in. pressure, the THS ECU determines that there is no leakage.
4) If the detection value is above the 0.02 in. pressure and near atmospheric pressure, the THS ECU determines that there is a gross leakage (large hole) and stores DTC P1421 in its memory.
5) If the detection value is above the 0.02 in. pressure and below near atmospheric pressure, the THS ECU determines that there is a small leakage and stores DTC P1420 in its memory.
6) When the fuel tank internal pressure equals the atmospheric pressure, if there is fluctuation in the fuel tank pressure sensor value, the THS ECU determines that the fuel vapor-containment valve is stuck opened and stores a DTC P2450 in its memory.

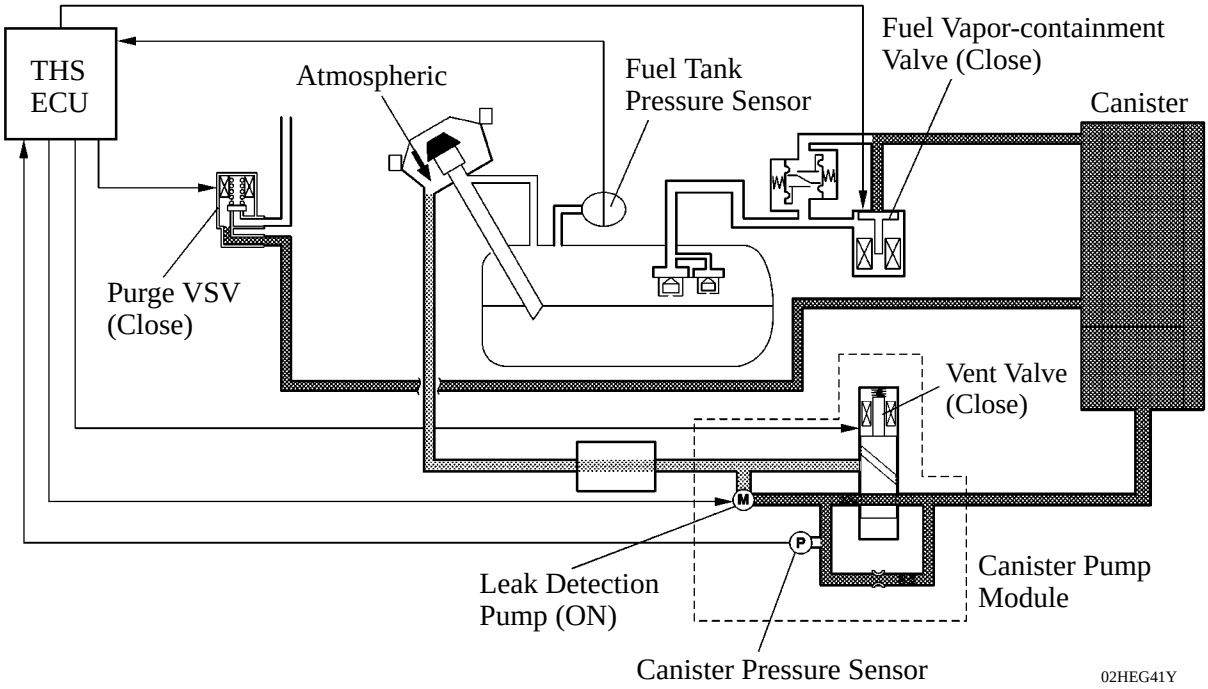

Downloaded from www.Manualslib.com manuals search engine

▶ Fuel Tank Internal Pressure Equals Atmospheric Pressure ◀

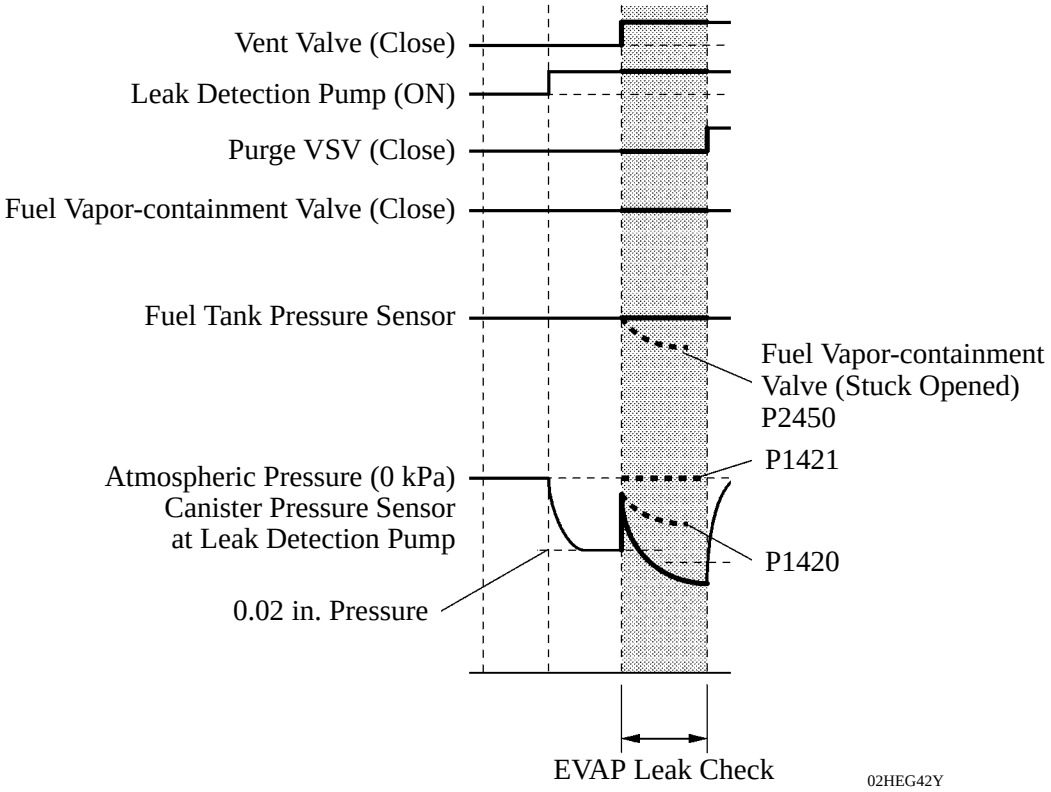

▶ Fuel Tank Internal Pressure High or Low ◀

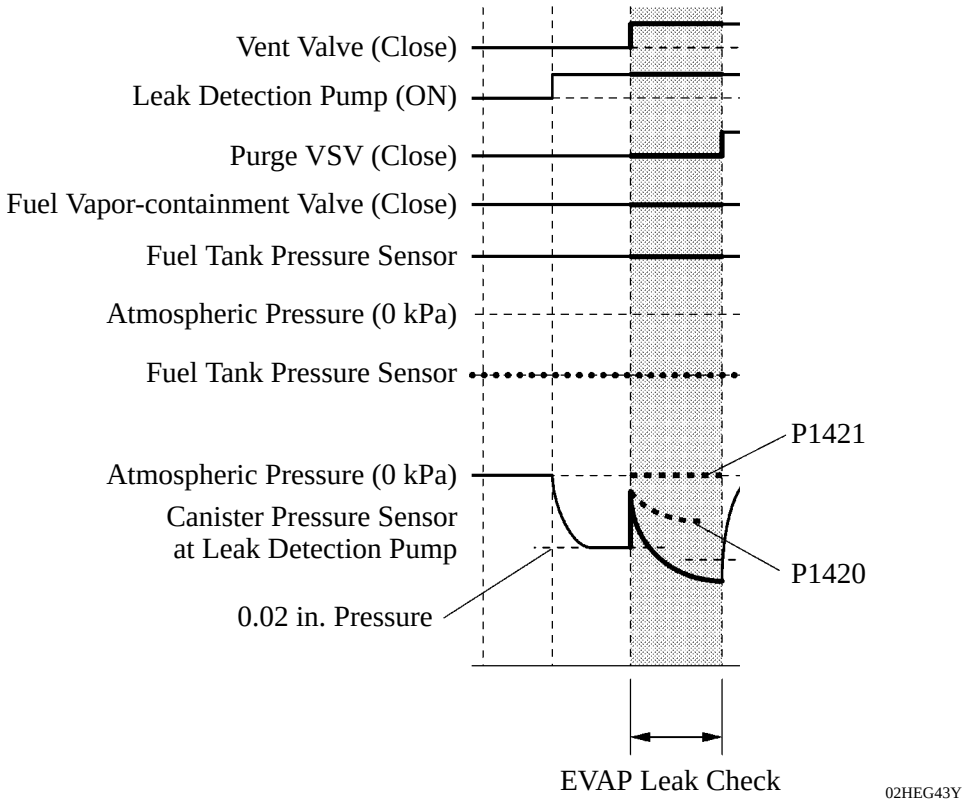

Downloaded from www.Manualslib.com manuals search engine

e. Purge VSV Monitor

1) After completing an EVAP leak check, the THS ECU turns ON (open) the purge VSV with the leak detection pump actuated, and introduces the atmospheric pressure in the intake manifold.
2) If the pressure change at this time is within the normal range, the THS ECU determines the condition to be normal.
3) If the pressure is out of the normal range, the THS ECU will stop the purge VSV monitor and store DTC P0441 in its memory.

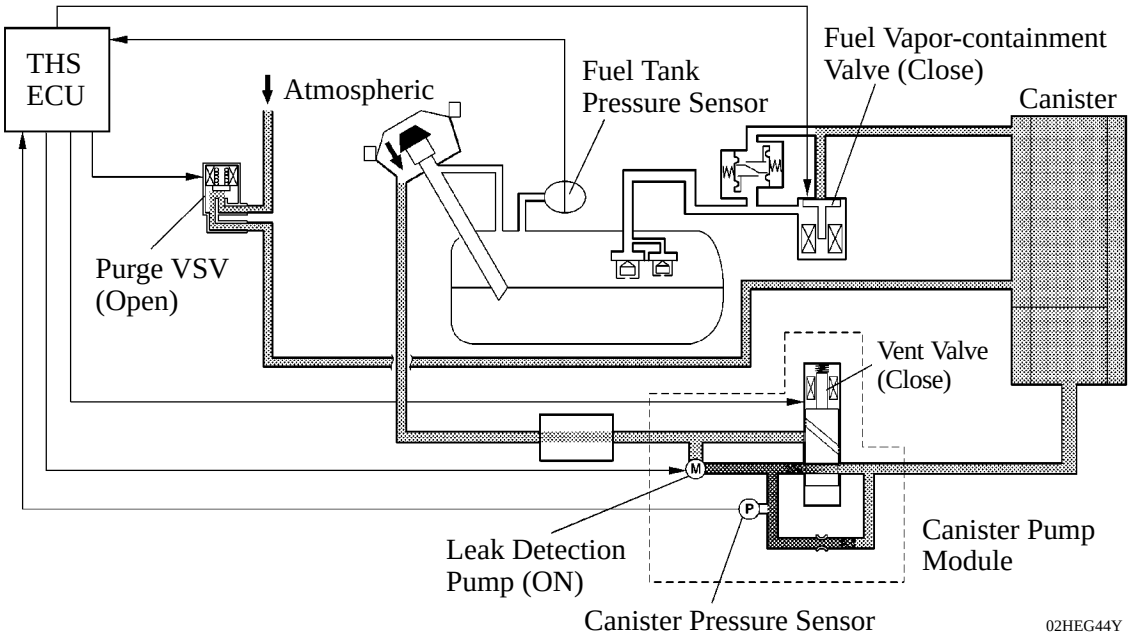

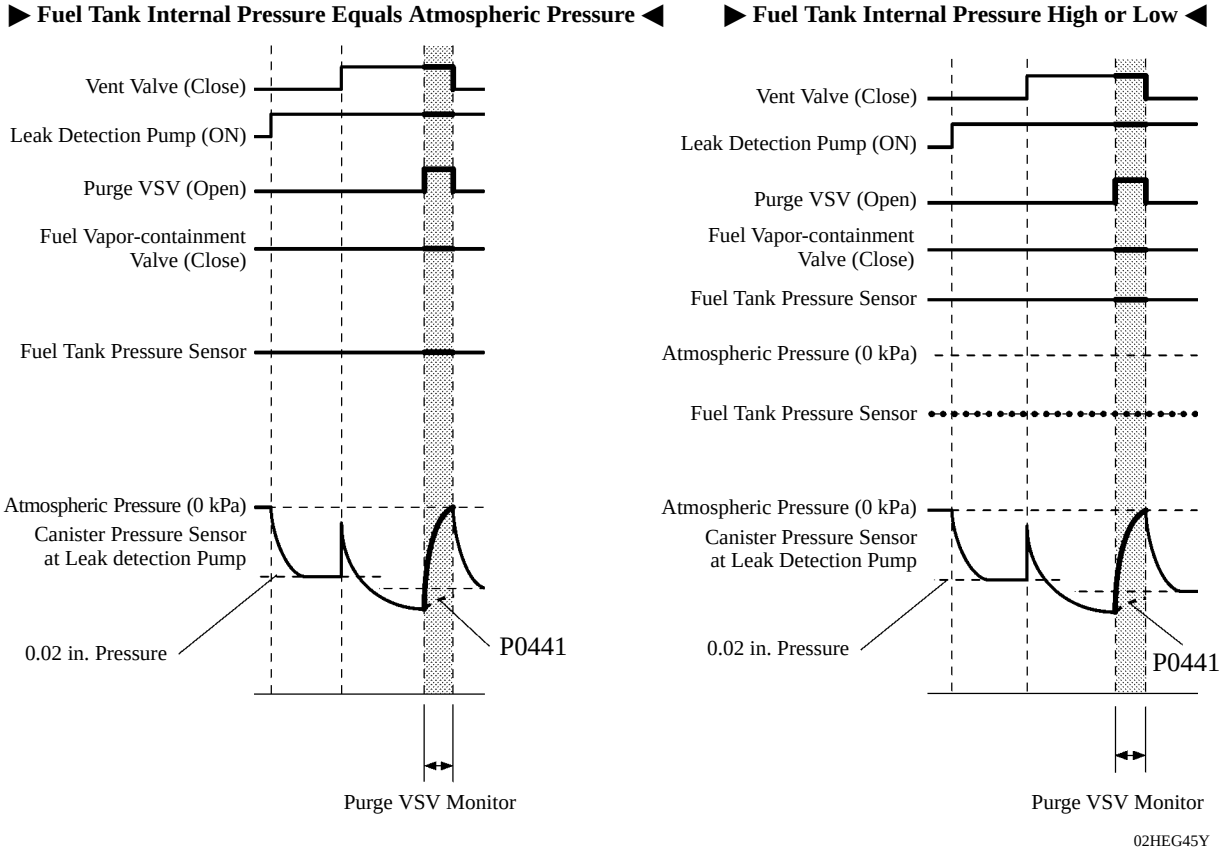

Downloaded from www.Manualslib.com manuals search engine

f. Fuel Vapor-Containment Valve Stuck Closed Judgment and Fuel Tank Leak Check

i) Fuel Tank Internal Pressure Equals Atmospheric Pressure

1) The THS ECU actuates the leak detection pump, and turns ON the canister pump module and the fuel vapor-containment valve (open), in order to introduce a vacuum into the fuel tank, pipe, and canister.
2) When the pressure in the system stabilizes, the THS ECU compares this pressure with the 0.02 in. pressure in order to check for a leakage.
3) If the detection value is below the 0.02 in. pressure, the THS ECU determines that there is no leakage.
4) If the detection value is above the 0.02 in. leak pressure and near atmospheric pressure, the THS ECU determines that there is a gross leakage (large hole) and stores DTC P1423 in its memory.
5) If the detection value is above the 0.02 in. leak pressure and below near atmospheric pressure, the THS ECU determines that there is a small leakage and stores DTC P1422 in its memory.
6) At this time, if there is no fluctuation in the fuel tank pressure sensor value, the THS ECU determines that the fuel vapor-containment valve is stuck closed and stores DTC P2451 in its memory.

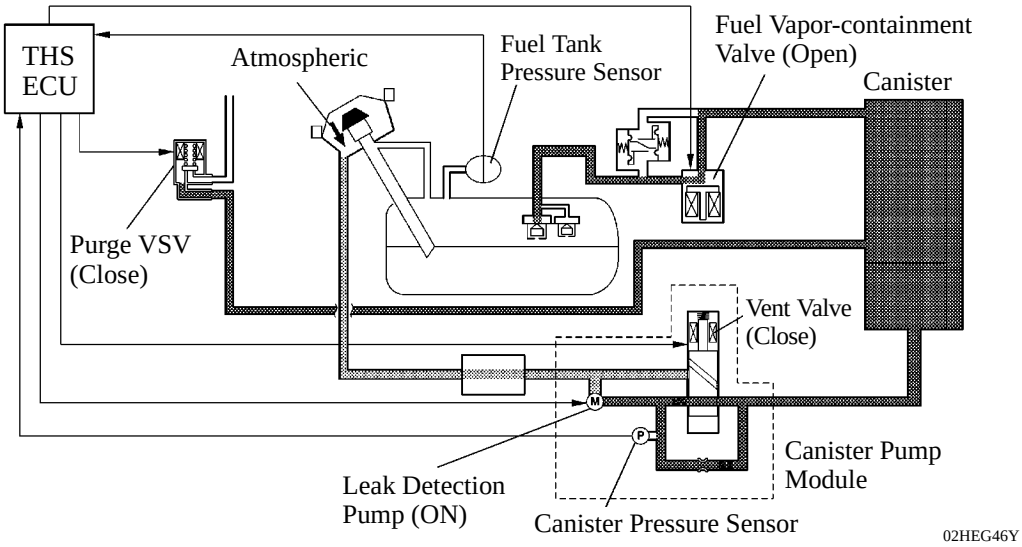

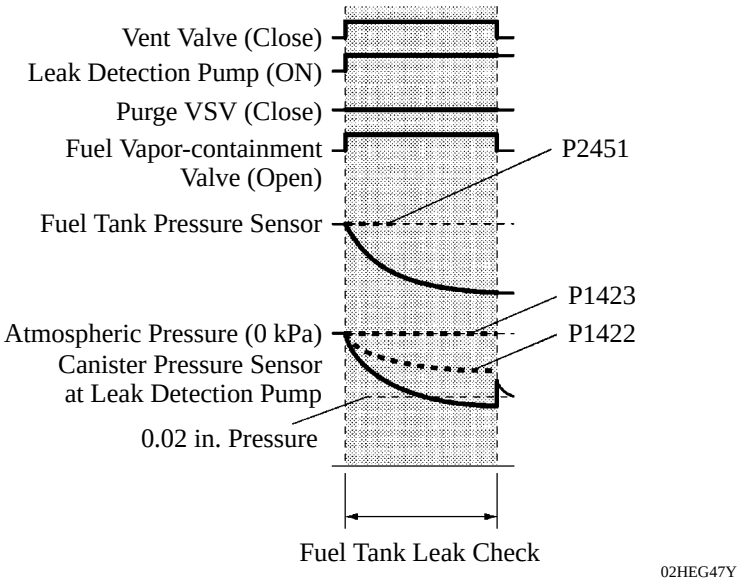

Downloaded from www.Manualslib.com manuals search engine

ii) Fuel Tank Internal Pressure is Higher or Lower than Atmospheric Pressure

If the internal pressure in the fuel tank is high or low, the THS ECU determines that there is no leakage in the fuel tank. Thus, it only determines that the fuel vapor-containment valve is stuck closed, without performing a fuel tank leakage check.

1) With the leak detection pump stopped, the THS ECU turns ON (opens) the fuel vapor-containment valve to introduce the internal pressure of the fuel tank into the pipe and the canister.
2) The THS ECU measures the atmospheric pressure through the signals provided by the canister pressure sensor.
3) If the value detected by the canister pressure sensor stays within the specified range, the THS ECU determines that the fuel vapor-containment valve is stuck closed and stores DTC P2451 in its memory.

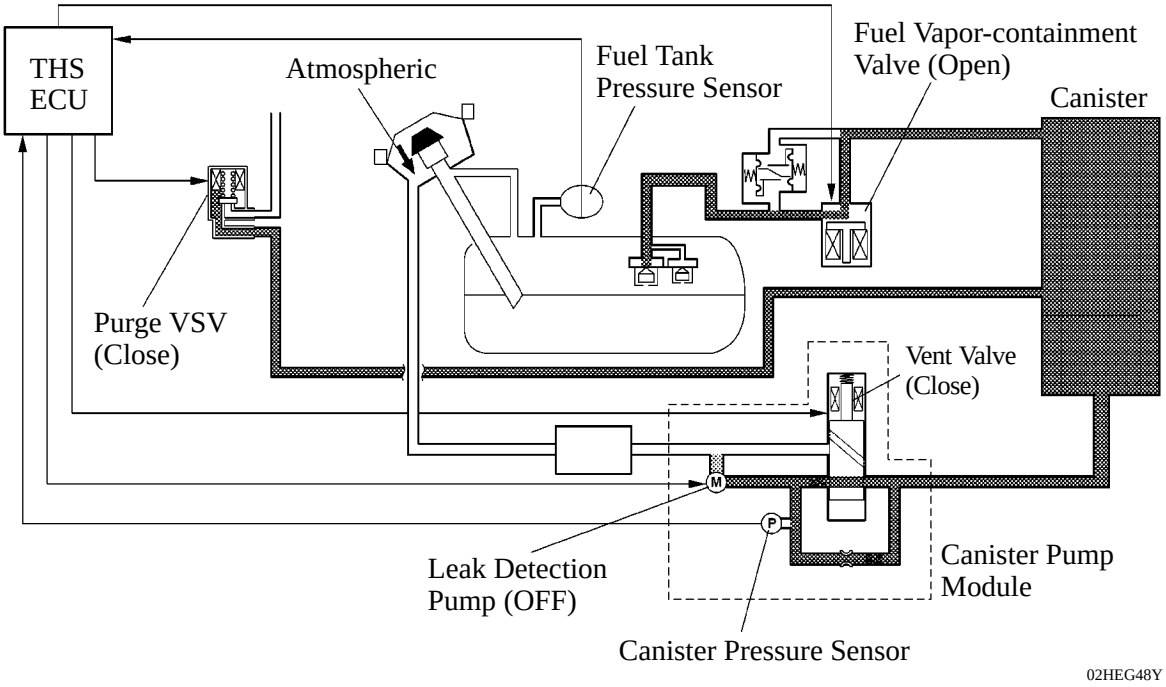

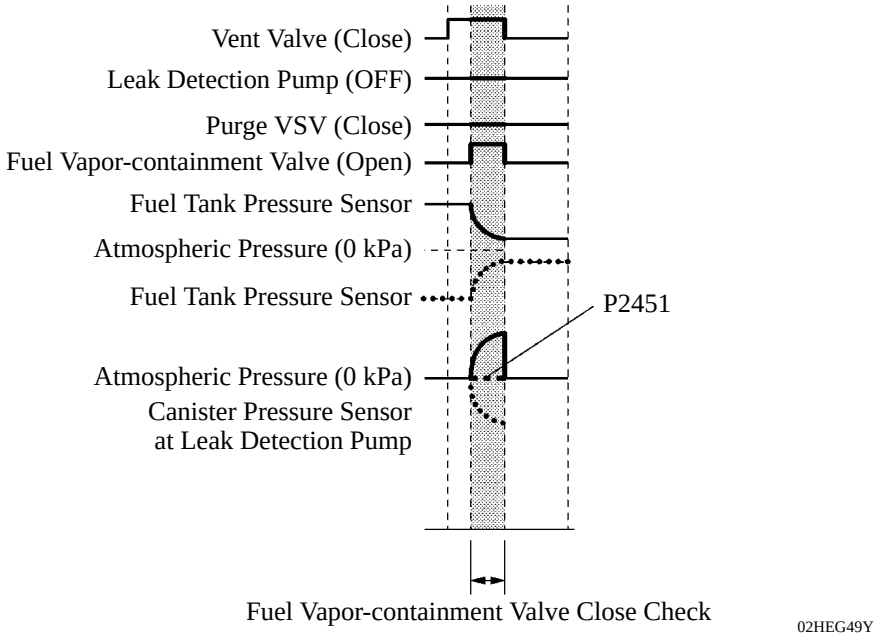

Downloaded from www.Manualslib.com manuals search engine

BODY ELECTRICAL

MULTIPLEX COMMUNICATION

■DESCRIPTION

- The multiplex communication system of the ’07 Camry Hybrid model uses the 2 communication protocols described below in order to achieve a streamlined wiring harness configuration.
  - CAN (Controller Area Network): Classified into two types according to communication speed, the HS (High Speed)-CAN is used for the power train, chassis and body electrical systems, and the MS (Medium Speed)-CAN is used for the body electrical system.
  - AVC-LAN (Audio Visual Communication - Local Area Network): Used for communication only between the audio-visual systems.
- The HS-CAN consists of the CAN No.1 bus and the MS-CAN consists of the MS bus. The main body ECU with gateway function is used to transmit data between the buses.
- Due to the introduction of the CAN system for the power train, chassis and body electrical systems, the BEAN (Body Electronics Area Network) is no longer used on this model.
- A customized body electronics system is used, enabling the control functions of the ECUs to be set using a hand-held tester. For details, see page BE-11.

▶ System Diagram ◀

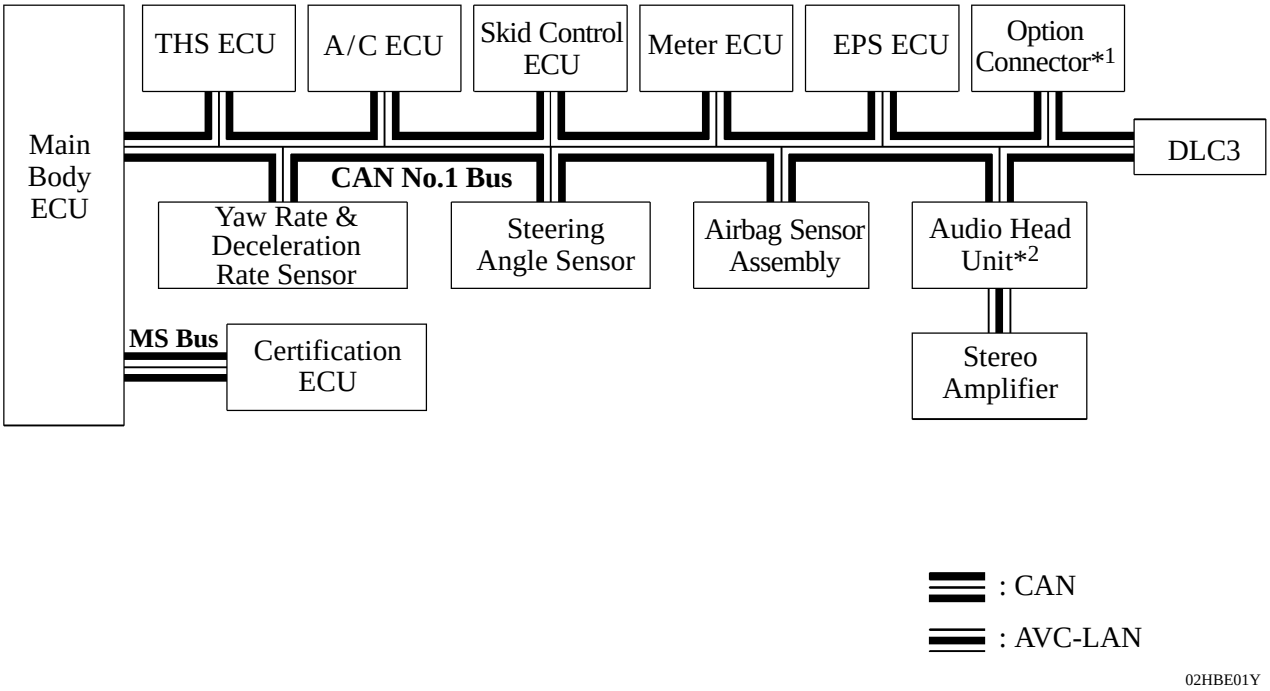

*1: The option connector is provided for connecting the bus buffer, which is designed for use with dealer option parts, to the CAN No.1 bus. When no dealer option parts are installed, it is not used.

*2: Only for models with Navigation with AV system.

Downloaded from www.Manualslib.com manuals search engine

— REFERENCE —

MPX communication uses serial communication data that consists of bits and frames in order to exchange information among the various ECUs. This allows a reduction of the amount of wiring on the vehicle.

- *A bit is the basic unit of communication that is used to represent the information. A bit is represented by binary values of 0 or 1.*
- *A frame is a body of data that is transmitted together. A frame contains a header that indicates the beginning, and an end message that indicates the end.*

▶ Conceptual Drawing ◀

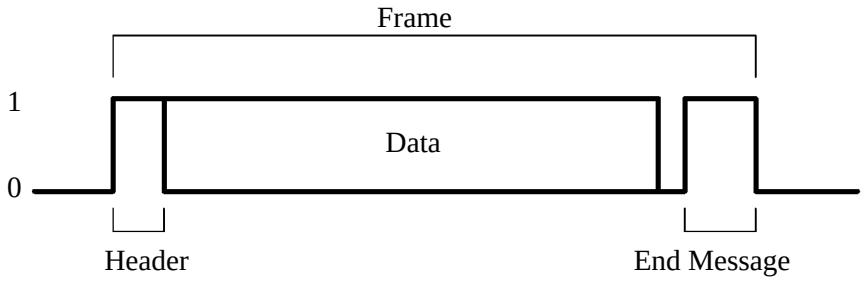

240BE05

Serial Communication Data

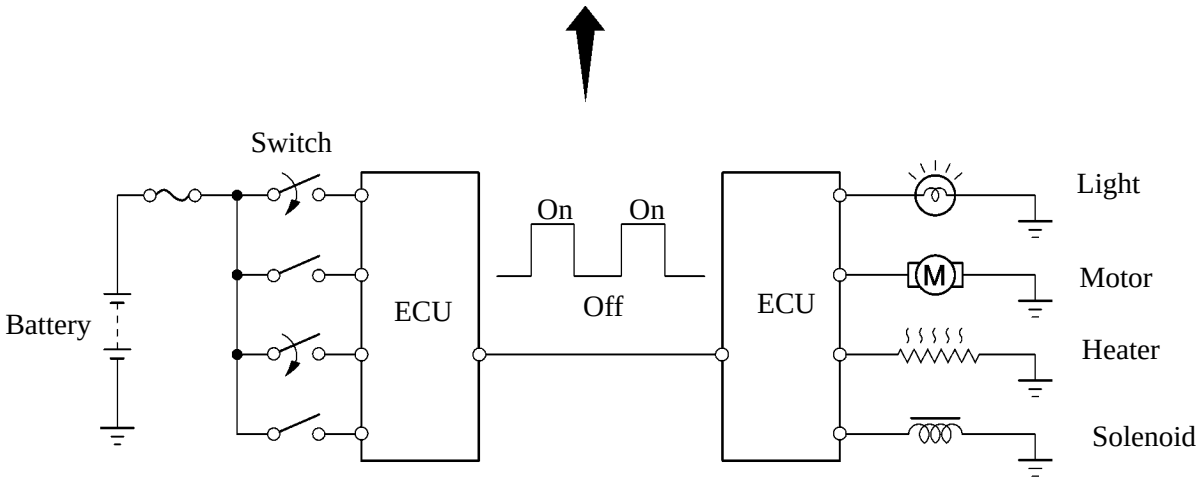

240BE03

Downloaded from www.Manualslib.com manuals search engine

■DIFFERENCES BETWEEN CAN, AVC-LAN AND BEAN

1. General

- The protocols, which are the rules for establishing data communication, differ between the CAN, AVC-LAN and BEAN*. If the ECUs in the networks use different frameworks for their data, such as communication speed, communication wire, and signals, they will be unable to understand each other. Therefore, protocols (rules) must be established among them.
- Compared to the AVC-LAN and BEAN*, the CAN features high-speed data transmission. Therefore, the CAN is able to transmit larger amounts of data faster than other protocols. This feature makes it possible to transmit data accurately in the power train and chassis control system, which requires large amounts of data to be transmitted in short periods of time.

*: The BEAN is used in the body electrical system of the ’06 Camry and some other TOYOTA models, but is not used on the ’07 Camry Hybrid model.

Protocol	CAN (ISO Standard)	AVC-LAN (TOYOTA Original)	BEAN (TOYOTA Original)
Communication Speed	500 kbps*/HS-CAN 250 kbps*/MS-CAN (Max. 1 M bps)	Max. 17.8 kbps*	Max. 10 kbps*
Communication Wire	Twisted-pair Wire	Twisted-pair Wire	AV Single Wire
Drive Type	Differential Voltage Drive	Differential Voltage Drive	Single Wire Voltage Drive
Data Length	1-8 Byte (Variable)	0-32 Byte (Variable)	1-11 Byte (Variable)

*: bps: abbreviation for “Bits Per Second”, indicating the number of bits that can be transmitted per second.

Downloaded from www.Manualslib.com manuals search engine

2. Communication Wire

A twisted-pair wire is used for CAN and AVC-LAN communication. A single, AV (Automobile Vinyl) wire is used for BEAN* communication.

*: The BEAN is used in the body electrical system of the ’06 Camry and some other TOYOTA models, but is not used on the ’07 Camry Hybrid model.

Communication Wire	Outline
Twisted-pair Wire for CAN 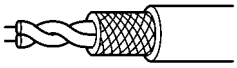 277BE102	This communication wire is a pair of twisted lines. Communication is driven by applying 1.5 to 2.5 V and 2.5 to 3.5 V of voltage to the two lines in order to send a single signal. This system, which is called a “Differential Voltage Drive”, reduces noise.
Twisted-pair Wire for AVC-LAN  241BE168	This communication wire is a pair of twisted lines. Communication is driven by applying positive (+) and negative (-) voltages to the two lines in order to send a single signal. This system, which is called a “Differential Voltage Drive”, reduces noise.
AV Single Wire 240BE09	This is a lightweight single communication wire that consists of a single core line surrounded by insulation. Voltage is applied to this line in order to drive communication, and this system is called a “Single Wire Voltage Drive”.

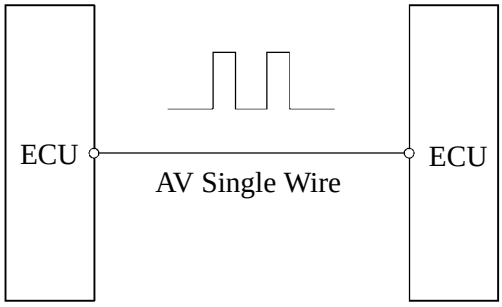

240BE11

Single Wire Voltage Drive

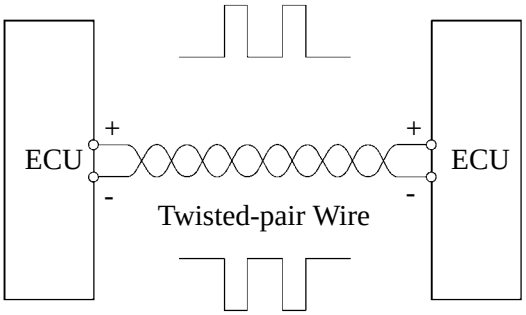

240BE12

Differential Voltage Drive

Downloaded from www.Manualslib.com manuals search engine

■CAN

1. General

- The ’07 Camry Hybrid model uses two types of CAN that have different communication speeds: HS-CAN (500 kbps) and MS-CAN (250 kbps).
- The HS-CAN consists of the CAN No.1 bus. The terminating resistors of the CAN No.1 bus are built into the THS ECU and meter ECU.
- The MS-CAN consists of the MS bus. The terminating resistors of the MS-bus are built into the main body ECU and certification ECU.
- The main body ECU, which has a gateway function, is used to transmit data between the CAN No.1 bus and the MS bus.

▶ Image of Data Transmission between Buses ◀

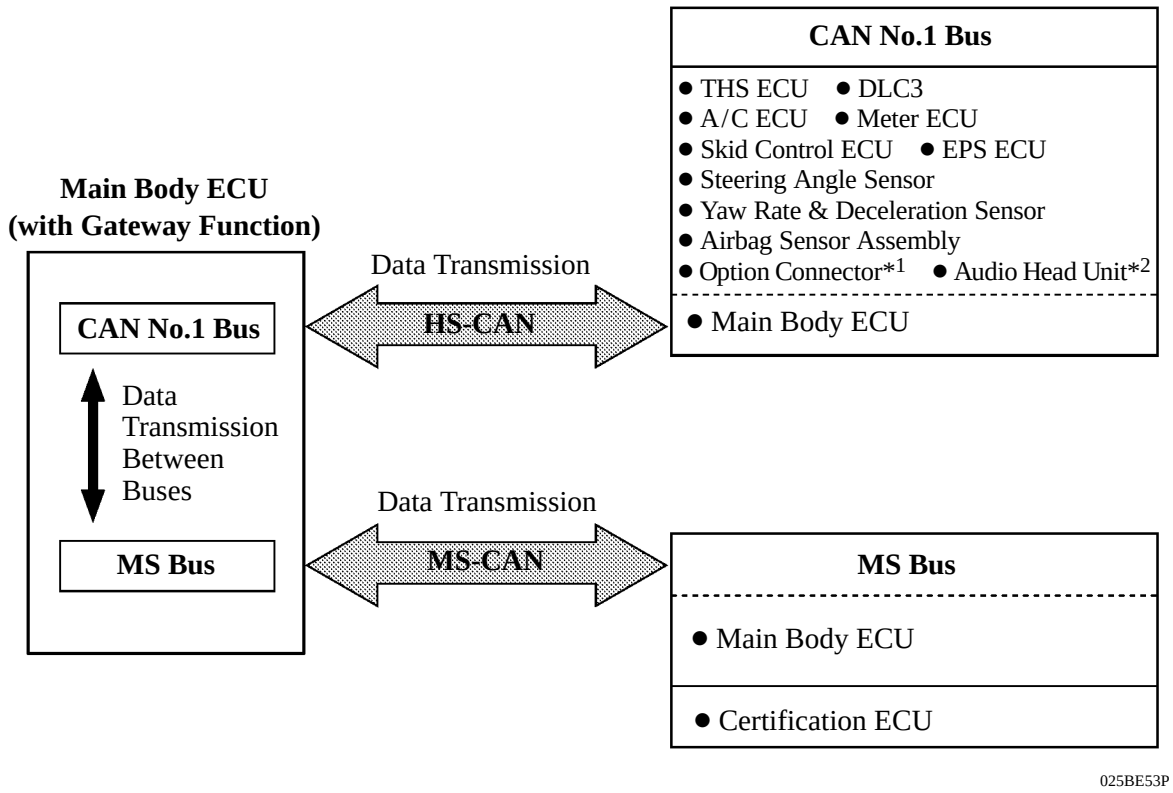

*1: The option connector is provided for connecting the bus buffer, which is designed for use with dealer option parts, to the CAN No.1 bus. When no dealer option parts are installed, it is not used.
*2: Only for models with Navigation with AV system.

Downloaded from www.Manualslib.com manuals search engine

▶ CAN No.1 Bus ◀

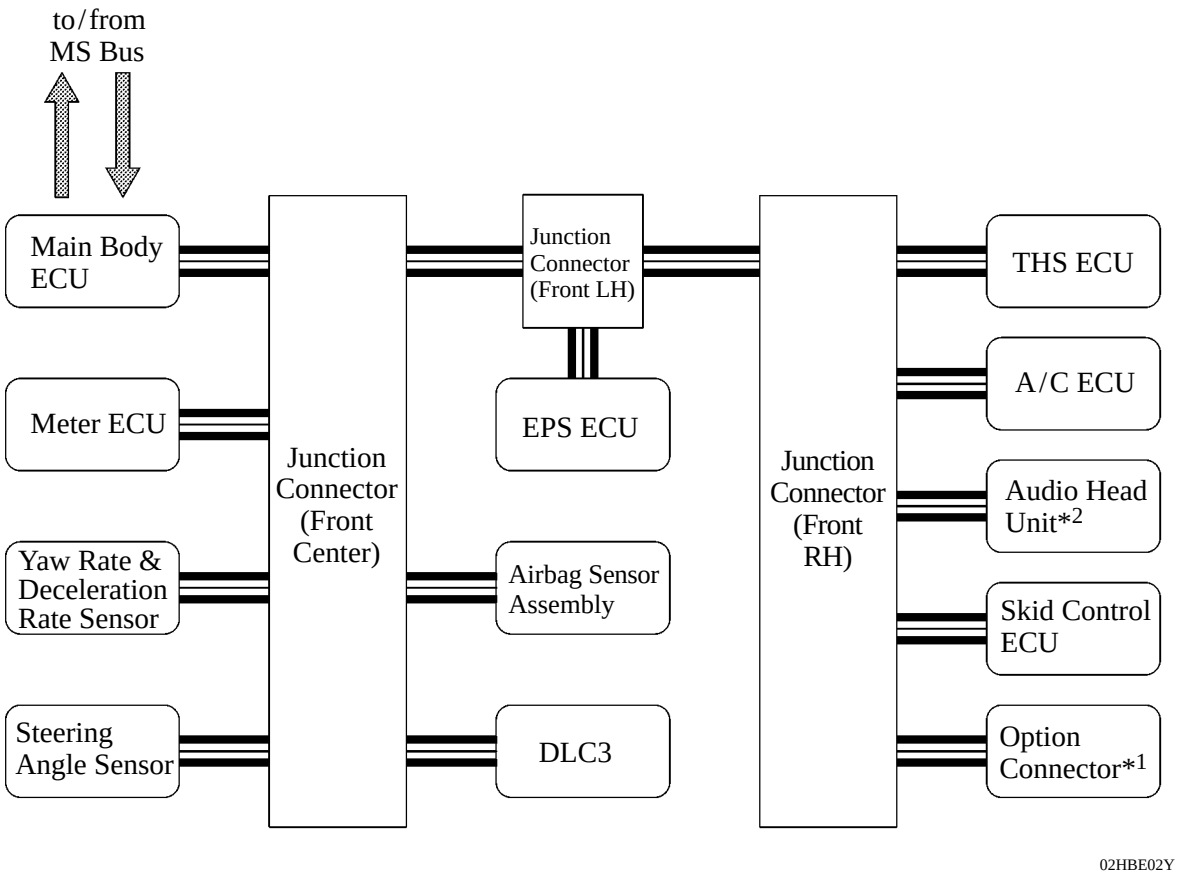

▶ MS Bus ◀

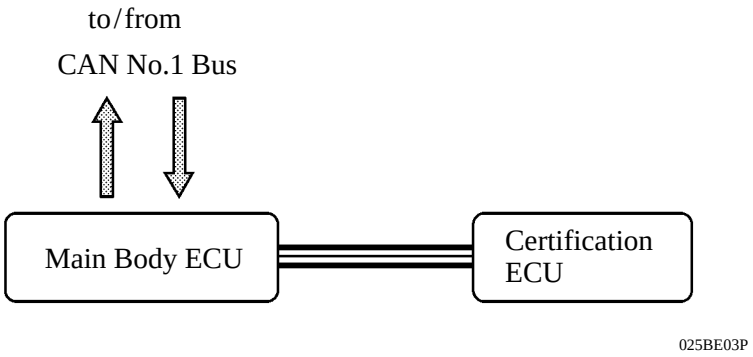

*1: The option connector is provided for connecting the bus buffer, which is designed for use with dealer option parts, to the CAN No.1 bus. When no dealer option parts are installed, it is not used.

*2: Only for models with Navigation with AV system.

Downloaded from www.Manualslib.com manuals search engine

2. Layout of Main Components

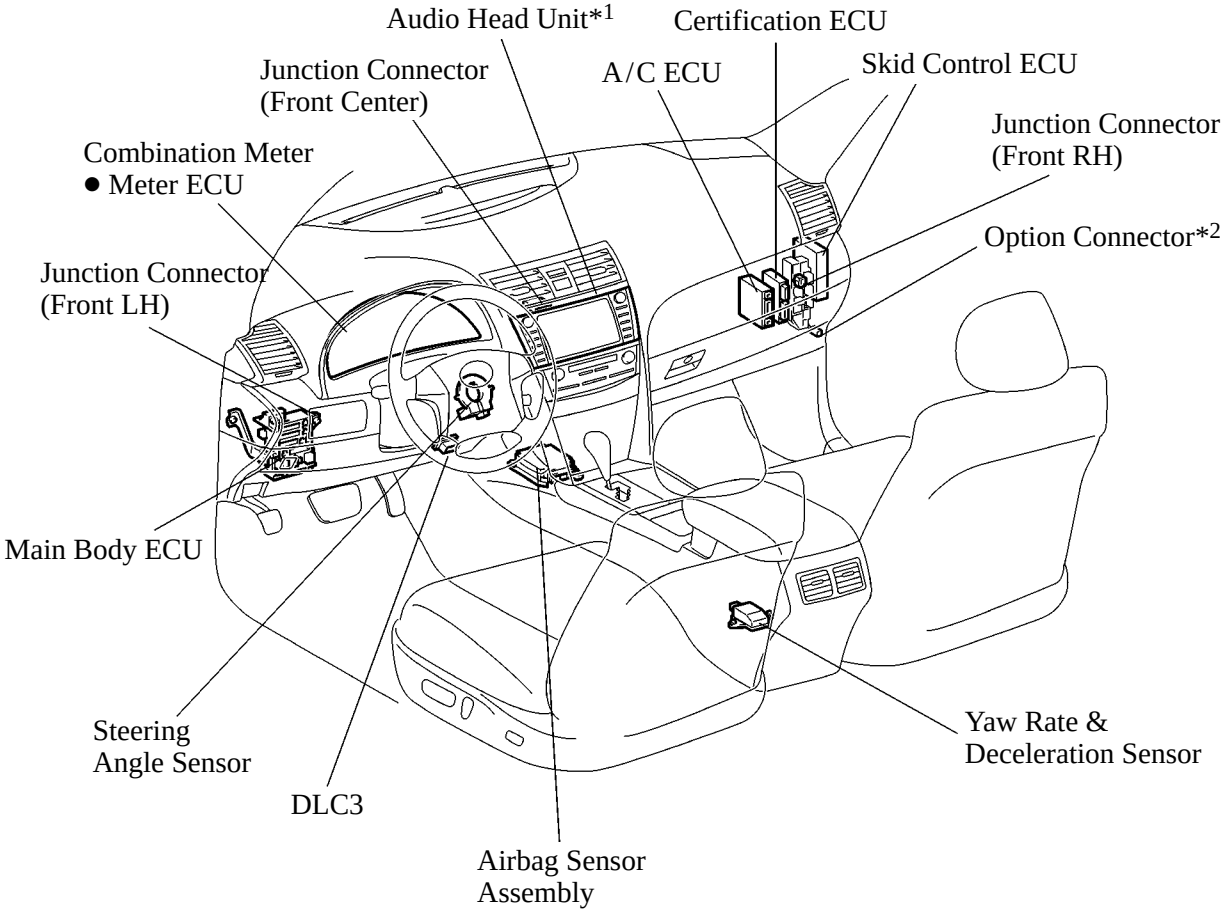

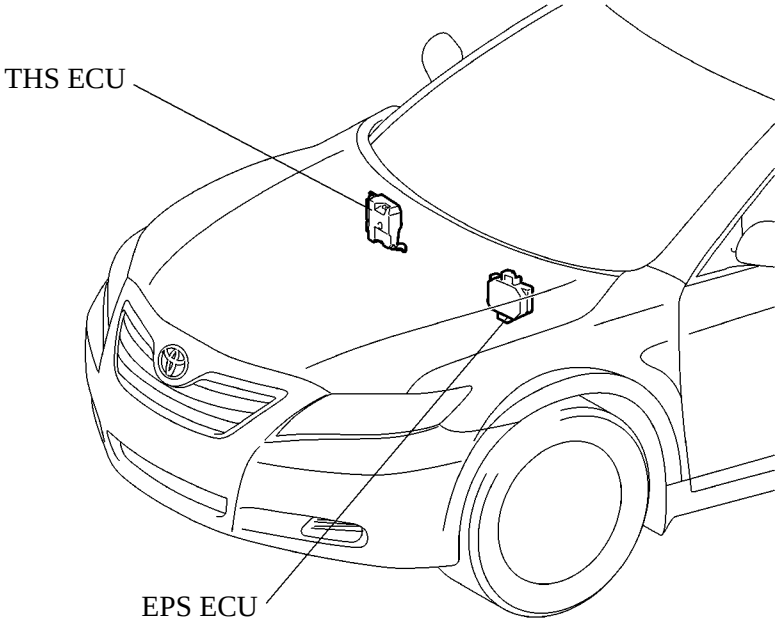

02HBE03TE

*1: Only for models with Navigation with AV system.

*2: The option connector is provided for connecting the bus buffer, which is designed for use with dealer option parts, to the CAN No.1 bus. When no dealer option parts are installed, it is not used.

Downloaded from www.Manualslib.com manuals search engine

3. Diagnosis

- If a malfunction occurs on the CAN communication line, the ECU that is connected to the CAN communication line stores the DTC (Diagnostic Trouble Code) in its memory.
- The 5-digit DTC can be read by connecting a hand-held tester to the DLC3.
- The DLC3 is equipped with CAN-H and CAN-L terminals for CAN diagnosis. It is possible to determine if there is an open or short in the main wire of the CAN No.1 bus by measuring the resistance value between these terminals.

For details, see the 2007 Camry Hybrid Vehicle Repair Manual (Pub. No. RM02H0U).

Service Tip

The diagnostic communication uses the CAN protocol. Therefore, a hand-held tester and a dedicated adapter (CAN VIM [Vehicle Interface Module]) are required for accessing diagnostic data. For details, see the 2007 Camry Hybrid Vehicle Repair Manual (Pub. No. RM02H0U).

Downloaded from www.Manualslib.com manuals search engine

■AVC-LAN

1. General

The AVC-LAN is used to transmit data only between the audio head unit and the stereo amplifier.

▶ System Diagram ◀

025BE06P

2. Layout of Main Components

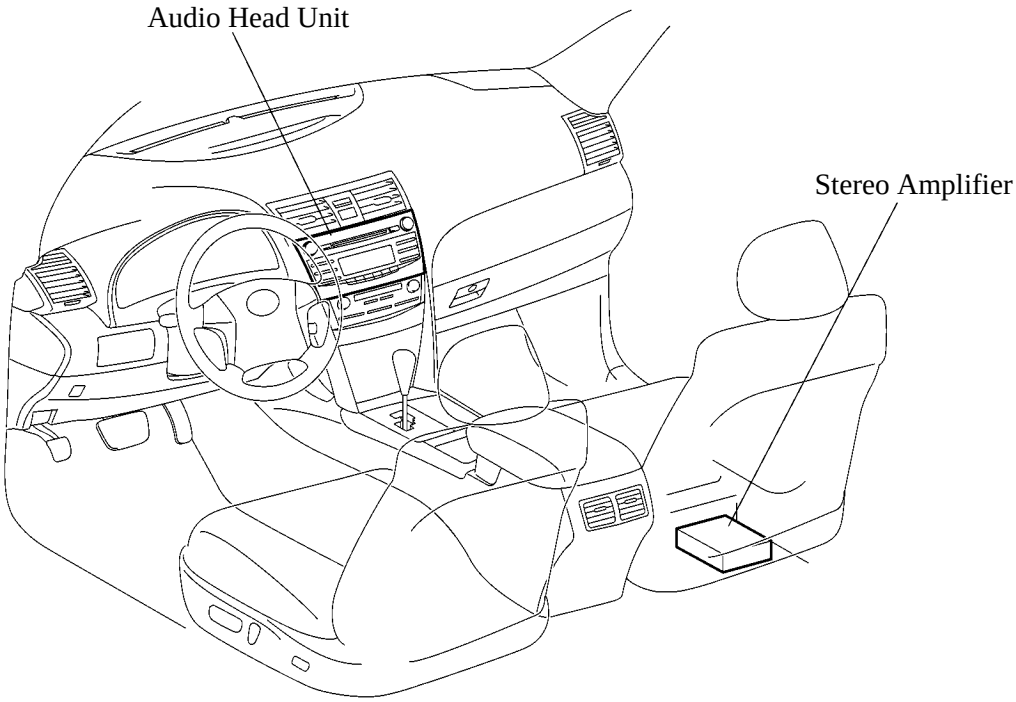

025BE05TE

3. Diagnosis

- If a malfunction occurs in the AVC-LAN communication line, the audio head unit stores a DTC (Diagnostic Trouble Code) in its memory.
- The DTC of models with the navigation with AV system can be read on the diagnosis menu display on the audio head unit.
- The DTC of models without the navigation with AV system can be read on the LCD of the audio head unit.

For details, see the 2007 Camry Hybrid Vehicle Repair Manual (Pub. No. RM02H0U).

Downloaded from www.Manualslib.com manuals search engine

■CUSTOMIZED BODY ELECTRONICS SYSTEM

A hand-held tester can be used to customize the system settings.

System	Hand-Held Tester Display Content	Contents	Default Setting	Available Setting
Wireless Door Lock	TRUNK LID OPER (Trunk lid open function type)	To change the operation method of opening the trunk by the transmitter.	0.8s PR	1 TIME/ 2 TIMES/ 0.8s PR/ OFF
	WIRELESS OPER (Wireless door lock control function)	Function to turn ON/OFF of the wireless door lock.	ON	ON/OFF
	HAZARD ANS BACK (Hazard answer back of the wireless)	Function to turn ON/OFF of the hazard answer back of the wireless door lock.	ON	ON/OFF
	WIRLS BUZZ RESP (Wireless buzzer response)	Function to turn ON/OFF of the wireless buzzer response function.	ON	ON/OFF
	OPEN DOOR WARN (Open Door Warning)	Function to make the buzzer sound for 10 seconds if the door is open when locking with the wireless door lock.	ON	ON/OFF
	AUTO LOCK DELAY (Auto lock time)	Function to change the time until re-locking after unlocking with the wireless door lock.	60 sec	30 sec/ 60 sec
	UNLOCK/2 OPER (2 times operation wireless unlock)	Function to unlock the driver's door by pressing the unlock button of the transmitter once and to unlock all the doors by pressing it twice. In the OFF setting, pressing one time makes all the doors unlocked.	ON	ON/OFF
Door Lock	UNLK/KEY TWICE (Unlock w/2 times D key operation)	Function to unlock only the driver's door by doing the key operation once and to unlock all the doors by doing it twice. In the OFF setting, operating the key "UNLOCK" once makes all the doors unlocked.	ON	ON/OFF
	AUTO LOCK/SHIFT (Automatic door lock linked shift)	Function to lock the doors when shifting the lever from P range to the range other than P.	ON	ON/OFF
	AUTO LOCK (Auto lock)	Function to lock the doors when the vehicle reaches a certain speed.	OFF	ON/OFF
	AUTO UNLK/SHIFT (Automatic door unlock linked shift)	Function to unlock the doors by shifting the lever to P range from other than P range when power source is ON.	ON	ON/OFF
	ALL UNLK/OPN-CL (All Unlock w/D door open-close)	Function to unlock all the other doors when opening the driver's door within 10 seconds after turning the power source to OFF from ON.	OFF	ON/OFF

(Continued)

Downloaded from www.Manualslib.com manuals search engine

System	Hand-Held Tester Display Content	Contents	Default Setting	Available Setting
Illuminated Entry	LIGHTING TIME (Lighting time)	Function to change the lighting time after closing the door. (It will quickly fade out in the event the power source is turned ON.)	15 sec	7.5 sec/ 15 sec/ 30 sec
	I/L ON/ACC OFF (I/L when ACC OFF)	Function to light up the interior lights when power source is turned from ACC to OFF.	ON	ON/OFF
	I/L ON/UNLOCK (I/L ON W/Door Key Unlock)	Function to light up the interior lights when unlocking with the door key cylinder.	ON	ON/OFF
Warning	KEY LOW-BATT WRN (Warn when the key battery becomes weak)	Setting a warning function for the first time when a key battery becomes weak.	ON	ON/OFF
	KEY REMND VOLM (Key reminder buzzer volume)	To change the volume of the key reminder buzzer.	LARGE	LARGE/ MEDIUM/ SMALL
	KEY REMND SOUND (Key reminder buzzer sound)	To change the frequency of the key reminder buzzer.	NORMAL	NORMAL/ FAST/ SLOW/0s
	SEAT BELT WARN (Seat belt warning buzzer)	Function to change the seat-belt warning buzzer.	D/P ON	D/P ON/ D ON/ P ON/ D/P OFF
Light Control	LIGHT OFF DELAY (Light auto OFF delay)	Function to keep on lighting the headlight for a certain period of time after closing all the doors with the power source turned OFF from ON under the condition that the light control switch is at HEAD or AUTO with the headlight ON.	30 sec	OFF/ 30 sec/ 60 sec/ 90 sec
	SENSITIVITY (Turn ON luminous intensity)	To adjust the sensitivity of the lighting illumination.	NORMAL	LIGHT 2/ LIGHT 1/ NORMAL/ DARK 1/ DARK 2
	DISP EX ON SEN (Display extinction luminous intensity)	To change the brightness of lowering the lights such as the indicator light of the combination meter, A/C indicator light, clock.	NORMAL	LIGHT 2/ LIGHT 1/ NORMAL/ DARK 1/ DARK 2
	DISP EX OFF SEN (Display extinction release luminous intensity)	To change the brightness of canceling the lowering the lights such as the indicator light of the combination meter, A/C indicator light, clock.	NORMAL	LIGHT 2/ LIGHT 1/ NORMAL/ DARK 1/ DARK 2
	DRL FUNCTION (DRL function)	ON/OFF of the DRL function.	ON	ON/OFF

(Continued)

Downloaded from www.Manualslib.com manuals search engine

System	Hand-Held Tester Display Content	Contents	Default Setting	Available Setting
A/C	SET TEMP SHIFT (Set Temperature Shift)	To control with the shifted temperature against the display temperature.	NORMAL	+2°C/ +1°C/ NORMAL/ -1°C/ -2°C
	AIR INLET MODE (Air Inlet Mode)	In case of turning the A/C ON when you desire to make the compartment cool down quickly, this is the function to change the mode automatically to RECIRCULATED mode.	AUTO	MANUAL/ AUTO
	COMPRESSOR MODE (Compressor Mode)	Function to turn the A/C ON automatically by pressing the AUTO button when the blower is ON and the A/C is OFF.	AUTO	MANUAL/ AUTO
	COMPRS/DEF OPER (Compressor/Air Inlet DEF operation)	Function to turn the A/C ON automatically linking with the FRONT DEF button when A/C OFF.	LINK	NORMAL/ LINK
	EVAP CTRL (Evaporator Control)	Function to set the evaporator control to the AUTOMATIC position (AUTO) to save power or to the coldest position (MANUAL) to dehumidify the air and to prevent the windows fogging up.	AUTO	MANUAL/ AUTO
	FOOT/DEF MODE (Foot/DEF auto mode)	Function to turn the air flow from FOOT/DEF ON automatically when AUTO MODE is ON.	ON	OFF/ON
	AUTO BLOW UP (Foot/DEF automatic blow up function)	Function to switch the blower level automatically when the defroster is ON.	ON	OFF/ON
	AMBIENT TMP SFT (Ambient Temperature Shift)	To control with the shifted ambient temperature against the display ambient temperature.	NORMAL	+3°C/ +2°C/ +1°C/ NORMAL/ -1 °C/ -2 °C/ -3 °C
Smart Key	WARNING 7 (Select IG ON available area)	Function to choose the available area for the key to start E/G and cancel the Steering Lock.	ALL	FRONT/ ALL
	PARK WAIT TIME (Wait time to permit opening door afterlocking)	Setting a wait time to permit opening a door after it being locked.	3.0 sec	1.0 sec/ 2.0 sec/ 3.0 sec/ 5.5 sec
	TRUNK OPEN MODE (Trunk open mode when vehicle is locked)	Function to permit opening a trunk with the key.	ON	ON/OFF

Downloaded from www.Manualslib.com manuals search engine

POWER DISTRIBUTOR

■DESCRIPTION

- The power distributor is built into the engine room relay block, and uses a small mechanical relay and semiconductor relay for a compact and lightweight design.
- The power distributor has a headlight control function. This function dims the headlights (Hi beam) in accordance with operation signals from the main body ECU while the daytime running light system is operating. For details, see page BE-17.

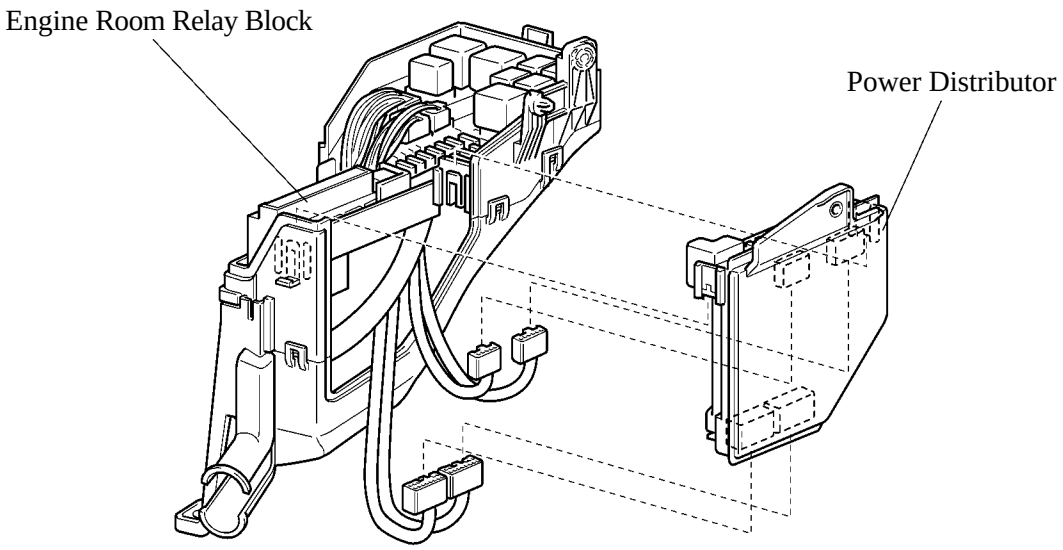

01YBE09Y

- The components of the power distributor are shown below.

Component	Relay
Mechanical Relay	● Horn Relay ● EFI Relay ● Circuit Opening Relay ● Headlight Relay (RH) ● Headlight Relay (LH)
Semiconductor Relay	● Daytime Running Light Relay (Headlight HI Beam Relay)

Downloaded from www.Manualslib.com manuals search engine

LIGHTING

■DESCRIPTION

1. General

The lighting system includes the following equipment:

Item		Equipment
Headlight	Halogen	Standard
Daytime Running Light		Standard
Automatic Light Control System		Standard
Illuminated Entry		Standard
Light Turn-OFF System (With Delay Function)		Standard

2. Front Exterior Light

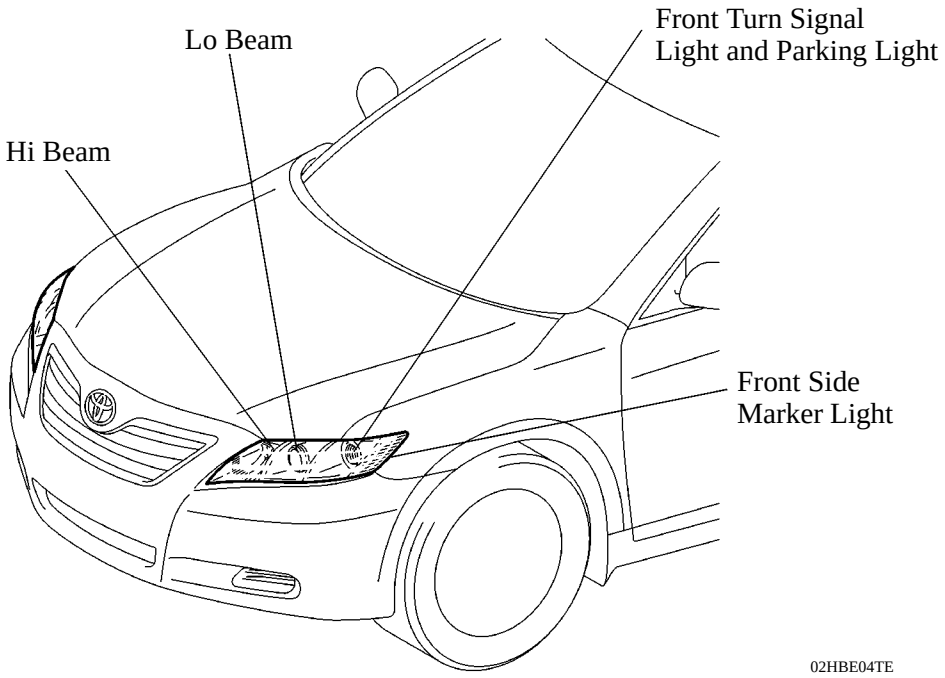

▶ Specifications ◀

Light		Type	W
Headlight Unit	Hi Beam	Halogen Bulb	60
	Lo Beam (Projector Type)	Halogen Bulb	55
	Turn Signal Light and Parking Light	Wedge Base Bulb (Amber)	27/8
	Front Side Marker Light	Wedge Base Bulb (Clear)	5

Downloaded from www.Manualslib.com manuals search engine

3. Rear Exterior Light

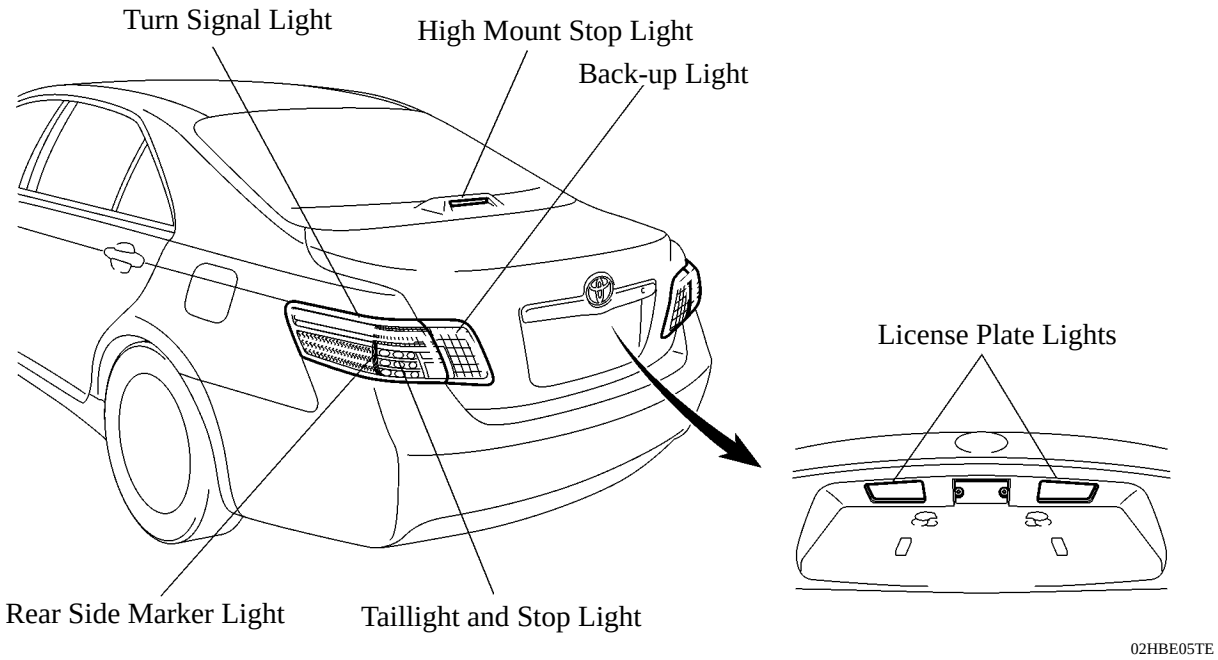

▶ Specifications ◀

Light		Type	W
Combination Light	Taillight and Stop Light	LED x 9	0.2/4.1
	Rear Side Marker Light	LED x 2	0.2
	Turn Signal Light	Wedge Base Bulb (Amber)	21
	Back-up Light	Wedge Base Bulb (Clear)	16
License Plate Lights		Wedge Base Bulb (Clear)	5
High Mount Stop Light		LED x 4	1.0

Downloaded from www.Manualslib.com manuals search engine

■DAYTIME RUNNING LIGHT SYSTEM

- A daytime running light system is designed to automatically illuminate the headlights (dimmed Hi beam), during the daytime to keep the car highly visible to other vehicles.
- The main body ECU and power distributor control this system. The main body ECU transmits a turn ON signal to the power distributor, and the power distributor illuminates and dims the Hi beam with the duty control.
- This system is enabled when the conditions given below are met:
  - Power Source: IG-ON
  - THS II READY Signal Input (THS II stand by condition)
  - Light Control Switch OFF*, TAIL, or AUTO position (if headlight-on control is not being performed by the automatic light control).
  - Parking Brake Switch: OFF

  *: Only for Canadian package models

▶ System Diagram ◀

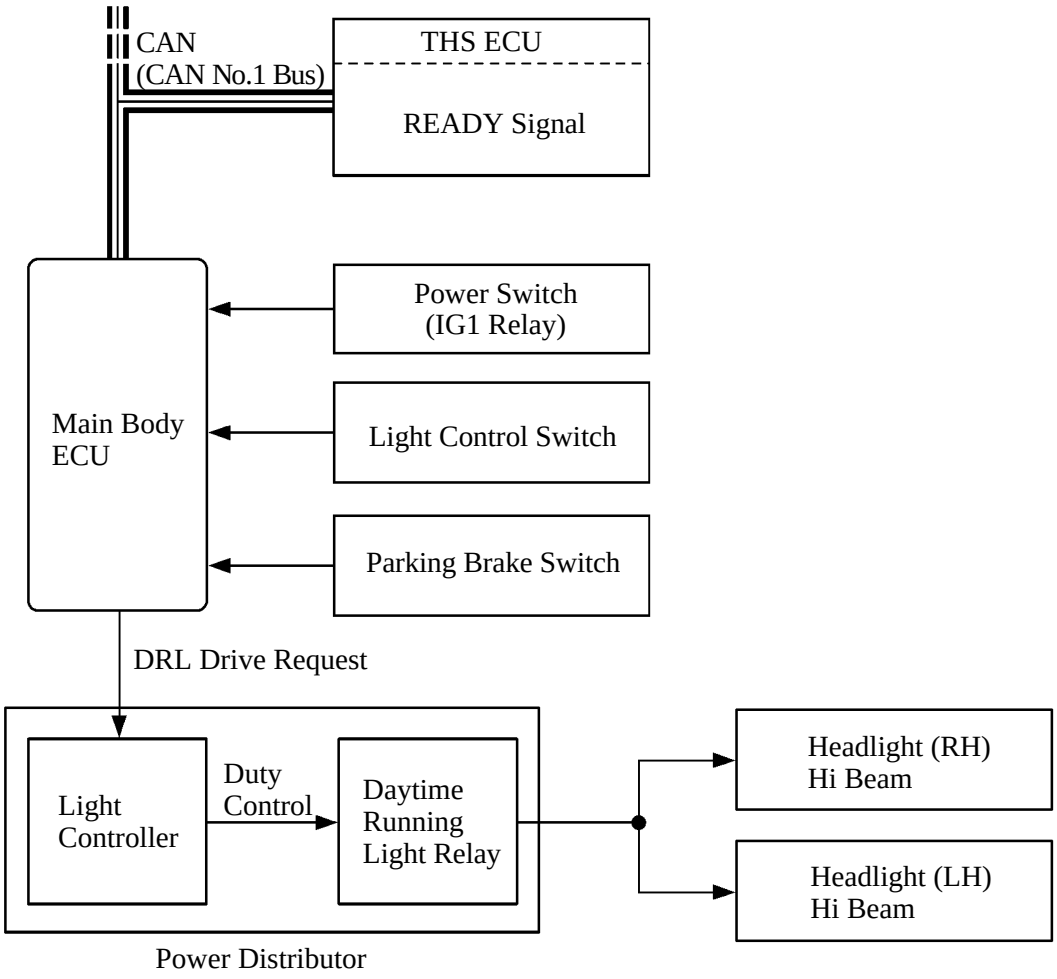

01YBE19P

Downloaded from www.Manualslib.com manuals search engine

■ILLUMINATED ENTRY SYSTEM

1. General

- The illuminated entry system of the ’07 Camry Hybrid model controls interior light and power switch illumination.
- The interior light is operated when the light switch is in the DOOR position.

▶ System Diagram ◀

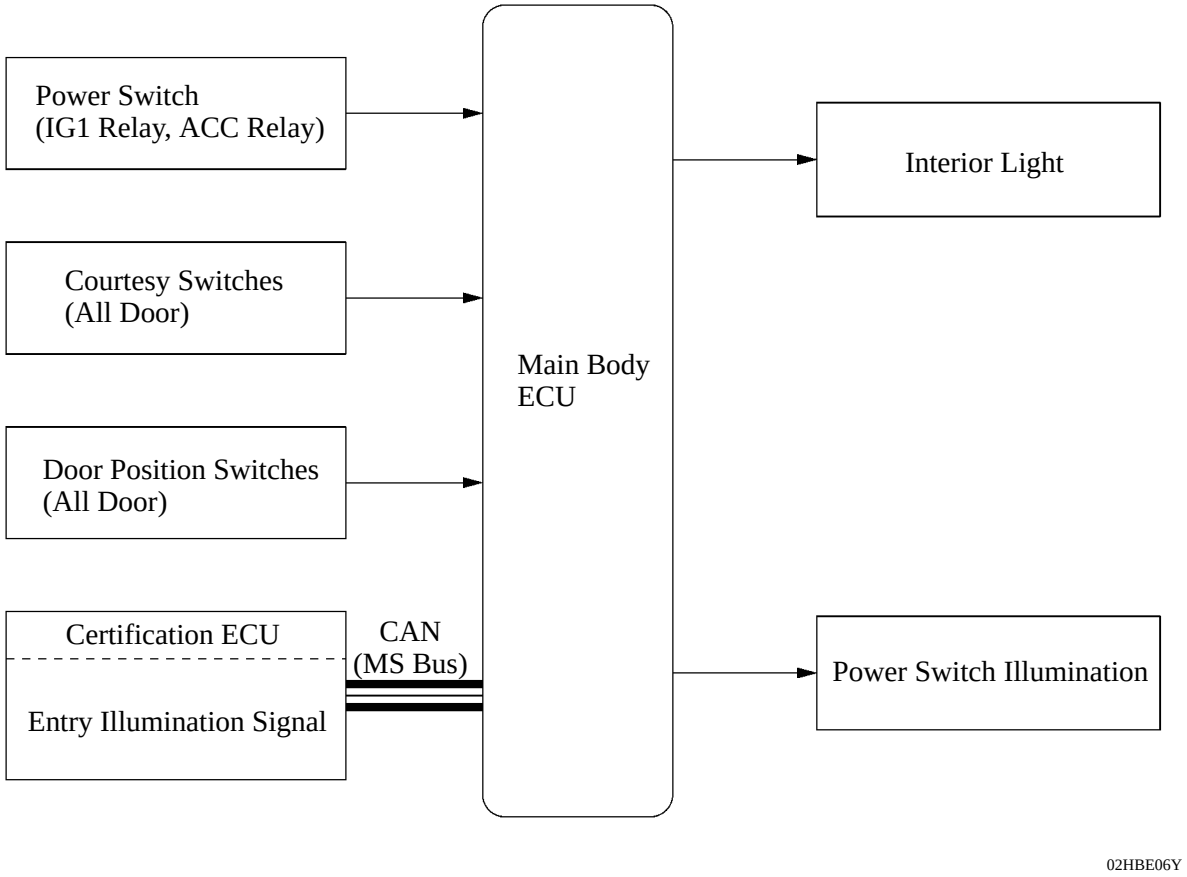

Downloaded from www.Manualslib.com manuals search engine

2. Layout of Main Components

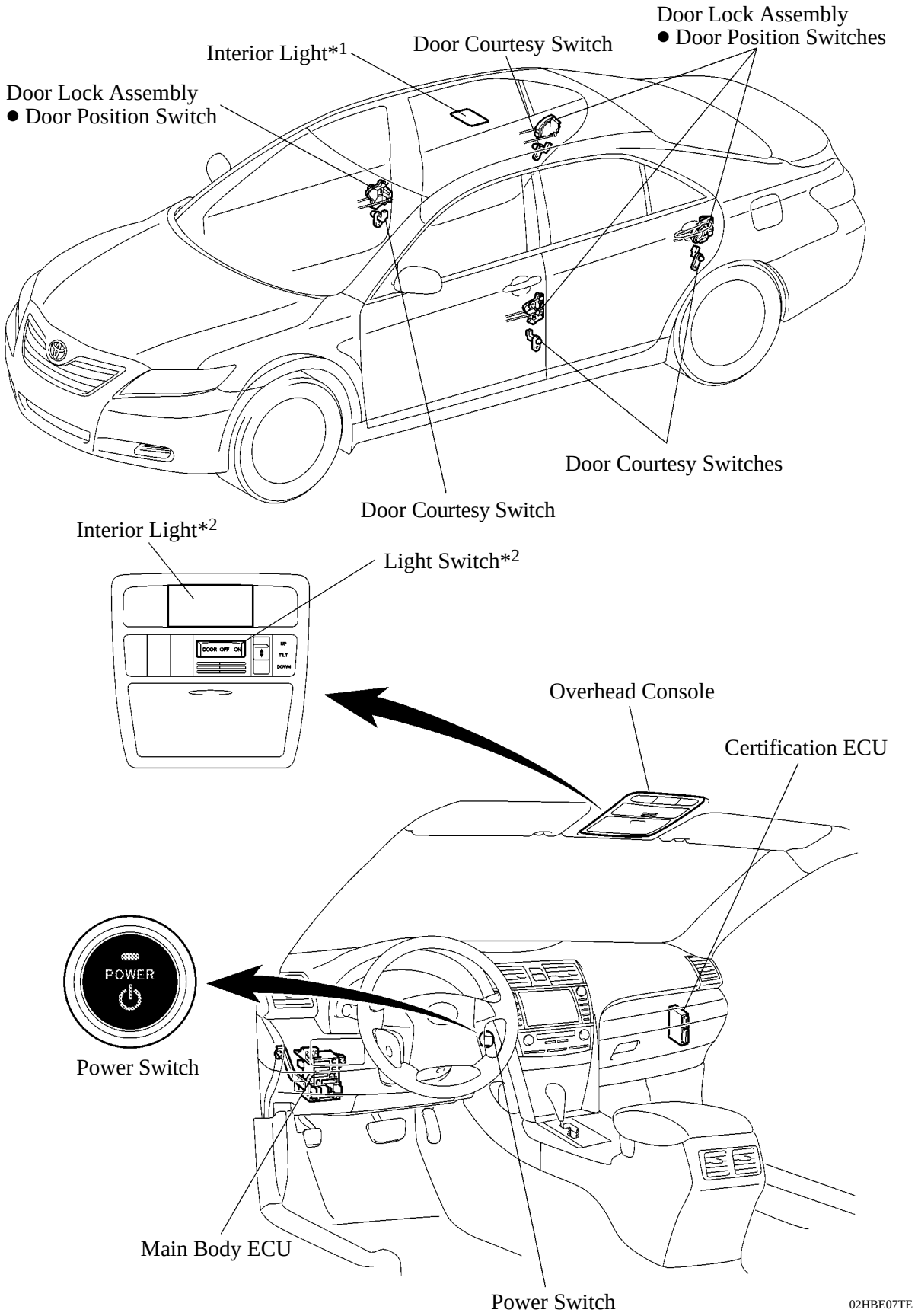

*1: Only for models without sliding roof system
*2: Only for models with sliding roof system

Downloaded from www.Manualslib.com manuals search engine

3. Interior Light Control

- The interior light control (interior light and power switch illumination) consists primarily of the fade-in/fade-out function and timer illumination function.
- The interior light control activates as described in the diagram below when one of items is in the respective state.
- This control is controlled by the main body ECU.

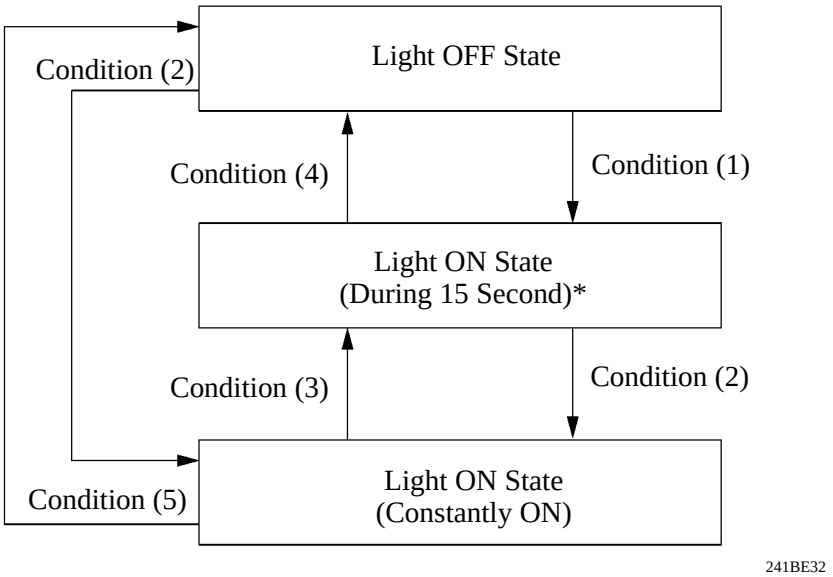

Condition	Item
Condition (1)	● With power source OFF and all doors closed, any door is unlocked. ● With all doors closed, power source is changed from ACC to OFF. ● With power source OFF and all doors closed, key enters any actuation area around the doors.
Condition (2)	● Any door is open.
Condition (3)	● With power source OFF and any door unlocked, an open door is closed.
Condition (4)	● Power source is ACC, IG-ON or READY. ● More than 15 seconds have elapsed since the Light ON State (15 second duration)*. ● With power source OFF and all doors closed, all doors are locked.
Condition (5)	● With power source ACC, IG-ON or READY, all doors are closed. ● With power source OFF and all doors closed, all doors are locked.

*: The function setting can be changed using the customized body electronics system. For details, refer to Customized Body Electronics System section on page BE-11.

4. Battery Saving Control

When the following two conditions have been met, battery saving control turns off the lights illuminated by the illuminated entry controls. Battery saving control is controlled by the main body ECU.

- The key is not in the actuation area.
- There is no change in the condition of the doors for 20 minutes.

Downloaded from www.Manualslib.com manuals search engine

■AUTOMATIC LIGHT CONTROL SYSTEM

- When the light control switch is in the AUTO position, the automatic light control system detects ambient light levels and controls the headlights and taillights (parking lights, taillights and license plate lights).
- The light control sensor detects the ambient light levels. This sensor is integrated into the solar sensor that is used for automatic air conditioning control.
- The main body ECU controls this system.

▶ System Diagram ◀

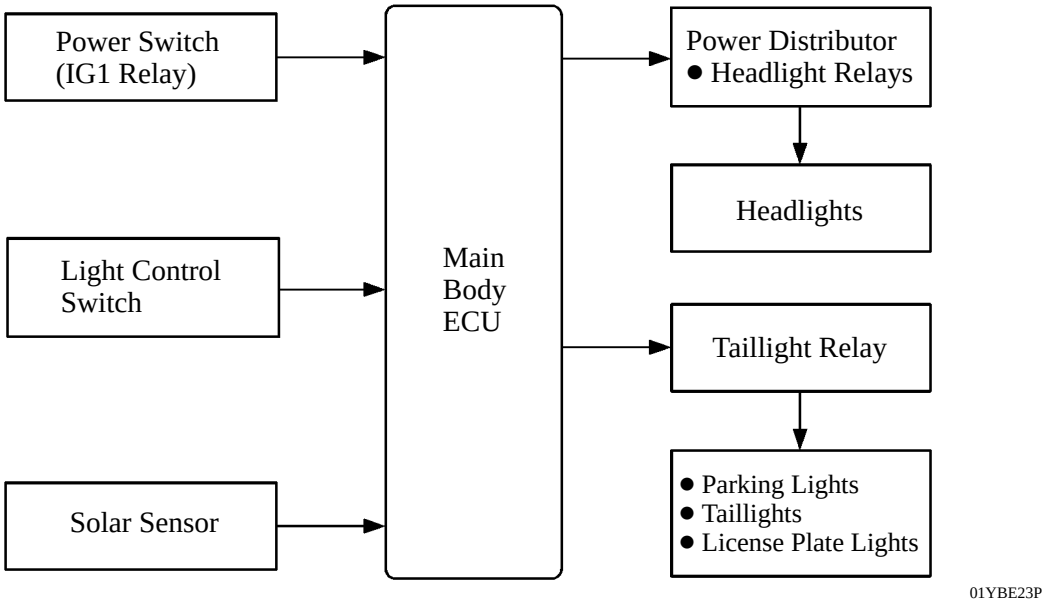

Downloaded from www.Manualslib.com manuals search engine

■LIGHT TURN-OFF SYSTEM

- The light turn-off system is used to prevent the driver from leaving the vehicle with the exterior lights (headlights, parking lights, taillights and license plate lights) ON.
- If the power source is turned OFF and any door is opened and all doors (including the luggage compartment door) are closed with all exterior lights ON, this system turns them OFF approximately 30 seconds after door closure. However, with all the doors locked, when the lock button on the wireless remote control is pushed, the exterior lights are turned OFF immediately.
- When the power source is turned OFF and the driver's door is opened with the exterior lights except headlights ON, this system turns them OFF.

▶ System Diagram ◀

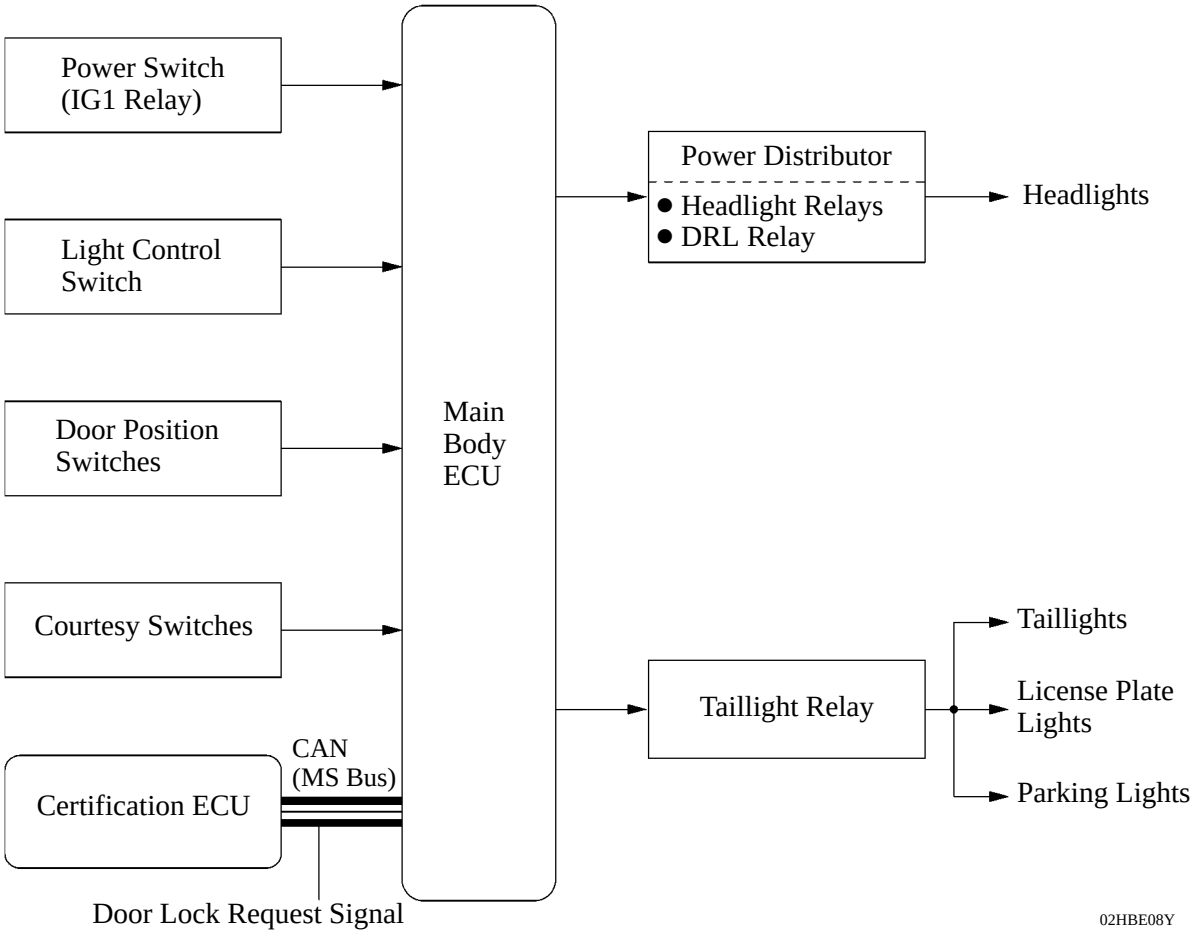

Downloaded from www.Manualslib.com manuals search engine

METER

■ COMBINATION METER

1. General

- An optitron display type combination meter is used which realizes excellent visibility through the use of smoke acrylic in the protective panel, and bright LEDs (Light Emitting Diodes) that have high contrast to illuminate the indicator and the dial.
- A multi-information display has been provided on the speedometer, in order to display the energy monitor, cruise information, eco drive level, and any warning messages.
- An analog type fuel expense meter is used.
- A meter ECU and buzzer are enclosed in the combination meter. This ECU maintains communication with other ECUs through the CAN (Controller Area Network).
- An eco drive level display is used, which changes the meter ring luminance and the multi-information display in 4 levels, in accordance with the fuel consumption conditions.
- Illumination control, which turns on the combination meter illumination at different time intervals when the power source is switched to IG-ON and READY, has been provided.
- A step-motor type movement is used to actuate the indicators of the speedometer, the fuel gauge, the engine coolant temperature gauge.

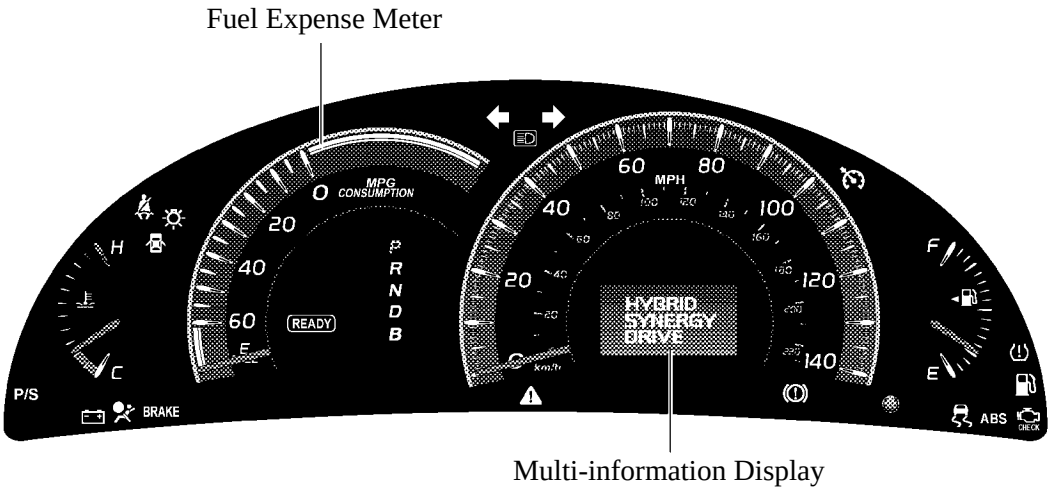

U.S.A. Model

02HBE09Y

Service Tip

If the LEDs malfunction, the entire combination meter assembly must be replaced. Refer to the 2007 Camry Hybrid Vehicle Repair Manual (Pub. No. RM02H0U).

Downloaded from www.Manualslib.com manuals search engine

2. System Diagram

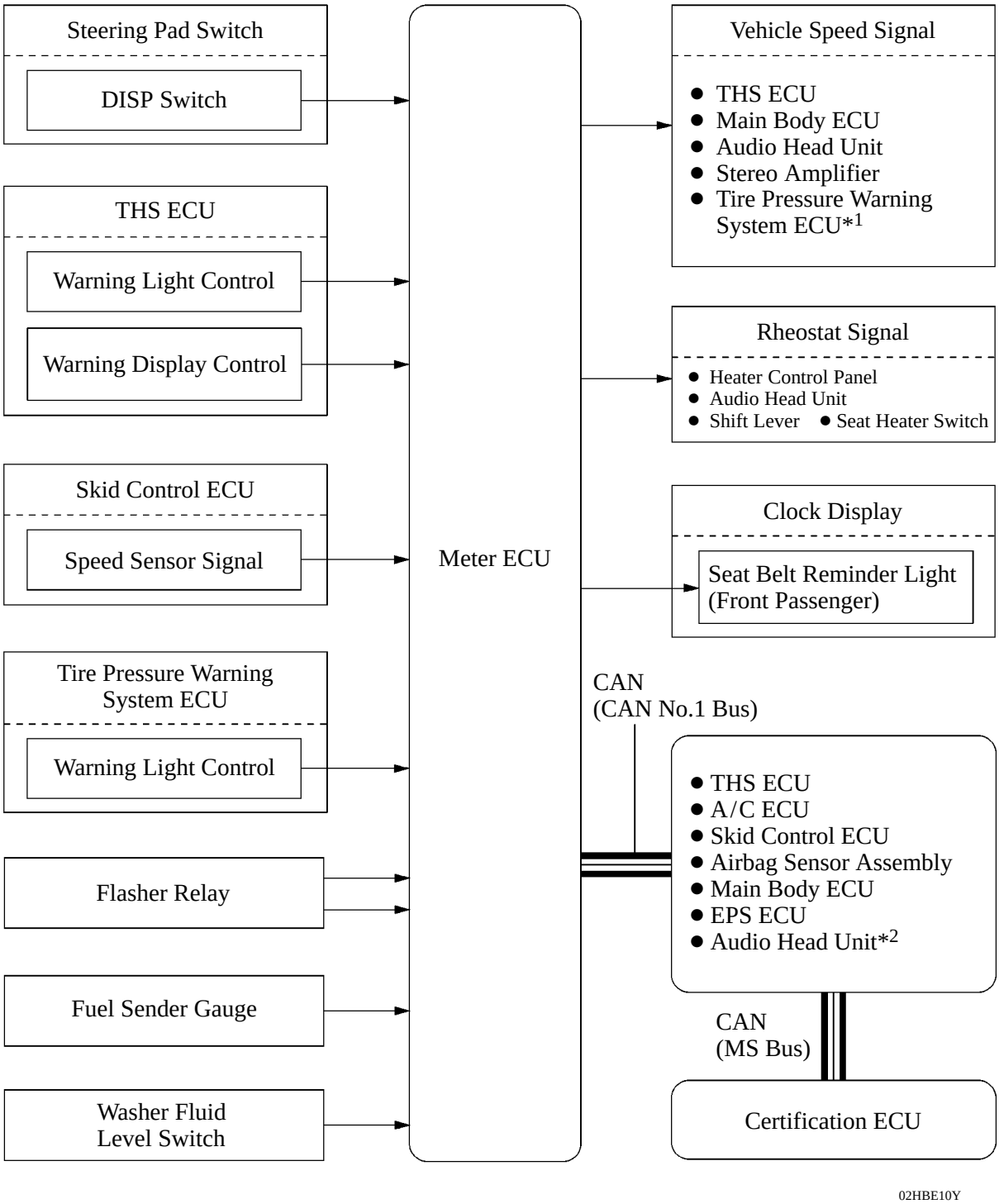

*1: Only for U.S.A. model
*2: Only for models with Navigation with AV system

Downloaded from www.Manualslib.com manuals search engine

▶ Input and output communication signals of the combination meter ◀

Protocol	ECU	Input Signal	Output Signal
CAN (CAN No.1 Bus)	THS ECU	● Engine speed ● Engine coolant temperature ● Fuel injection volume ● Shift position ● Buzzer sounding request ● Diagnosis (Cruise) ● READY and cruise MAIN indicator light control ● CHARGE warning light control ● Warning display control	Vehicle Speed
	A/C ECU	Outside temperature	Vehicle speed
	Airbag Sensor Assembly	● Warning light control ● Seat belt remainder control (D, P) ● Diagnosis	Vehicle speed
	Skid Control ECU	● Warning light control ● Warning Display control ● Vehicle Speed ● Diagnosis	—
	EPS ECU	● Warning light control ● Diagnosis	—
	Main Body ECU	● Lighting status ● Parking brake switch ● Courtesy switch ● Buzzer sounding request ● Warning display control ● Diagnosis	—
	Audio Head Unit*	● Trip information operation	Trip information display
CAN (MS Bus)	Certification ECU	● Warning display control ● Buzzer sounding request	Vehicle Speed

*: Only for models with Navigation with AV system

Downloaded from www.Manualslib.com manuals search engine

3. Illumination Control

- When the power source is switched to IG-ON, the illumination control operates as follows (1, 2):
- When the power source is switched to OFF, the illumination control is as follows (3):

1) The needles of the fuel expense meter, speedometer, fuel gauge and engine coolant temperature gauge illuminate, and “HYBRID SYNERGY DRIVE” appears on the multi-information display at the same time as the meter ring illuminates.

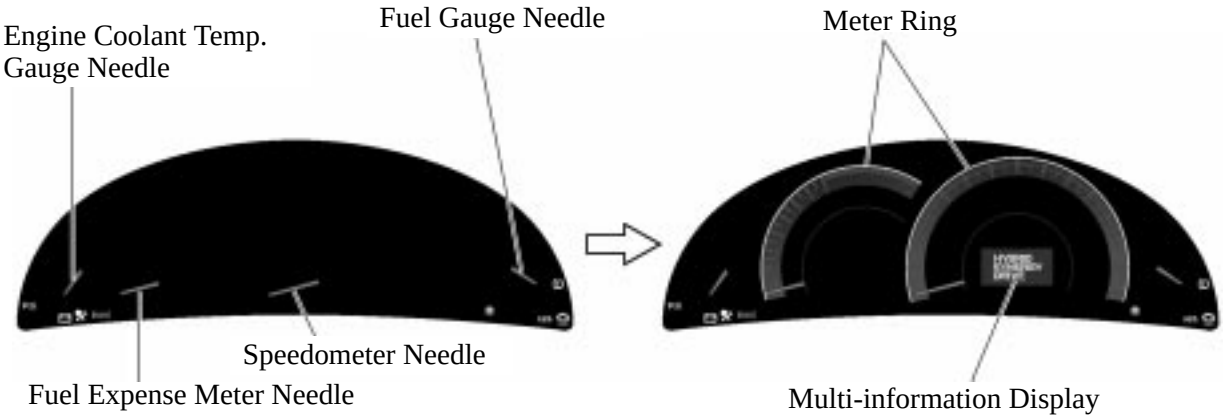

02HBE11Y

2) The meter illumination gradually fades in after the meter ring and the multi-information display illuminate. Then the meter ring illumination turns off.

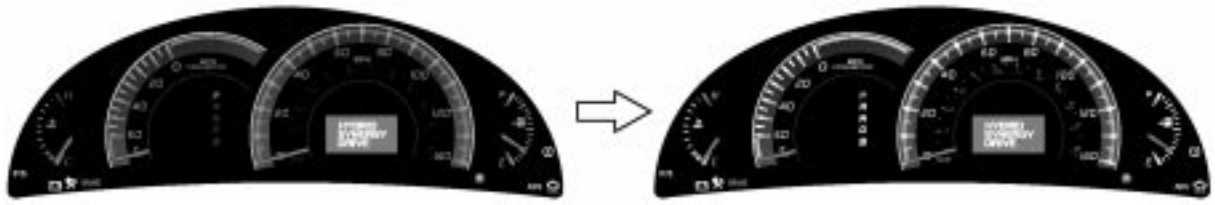

Fade-in condition

02HBE12Y

3) All illuminations other than the multi-information display go off, and “ECO DRIVE LEVEL” appears on the multi-information display. The meter ring illuminates in accordance with the indicated “ECO DRIVE LEVEL”. Then “ECO DRIVE LEVEL” disappears and the multi-information display turns off.

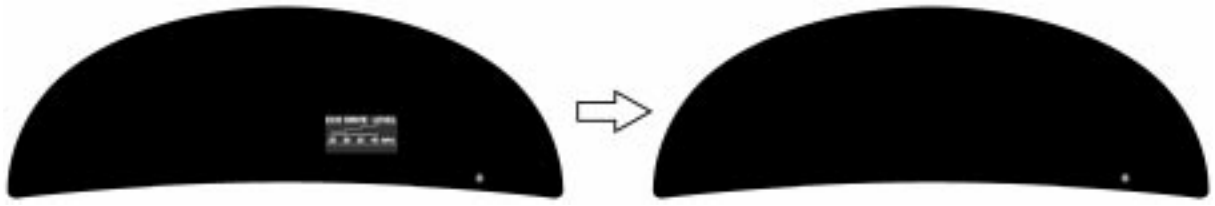

02HBE13Y

Downloaded from www.Manualslib.com manuals search engine

4. Multi-information Display

General

The multi-information display has five modes:

Mode	Outline
Cruise Information (See page BE-29)	● Five types of information can be displayed: outside temperature, driving range, average fuel consumption since refueling, distance driven since THS II start, and average speed since THS II start. ● The display can be changed by using the DISP switch.
Energy Monitor Display (See page TH-55)	● Indicates the energy transmission direction for checking the current drive method (engine, motor or both), the power generation status of the engine and the status of regenerative energy use. ● The SOC (state of charge) of the battery can be checked on the meter using an 8-stage display, which is provided in the battery illustration. ● The display can be changed by using the DISP switch.
Eco Drive Level Display (See page BE-30)	● The average fuel consumption conditions since THS II start are indicated in 4 levels. ● The display can be changed by using the DISP switch.
Warning (See page BE-31)	Interrupts the multi-information display immediately when a warning occurs.
Diagnosis (See page CH-70)	DTC (Diagnostic Trouble Code) for the brake control system can be displayed.

Downloaded from www.Manualslib.com manuals search engine

Flow of The Multi-information Display Indication

- The multi-information display mode can be changed as shown in the flow chart below:

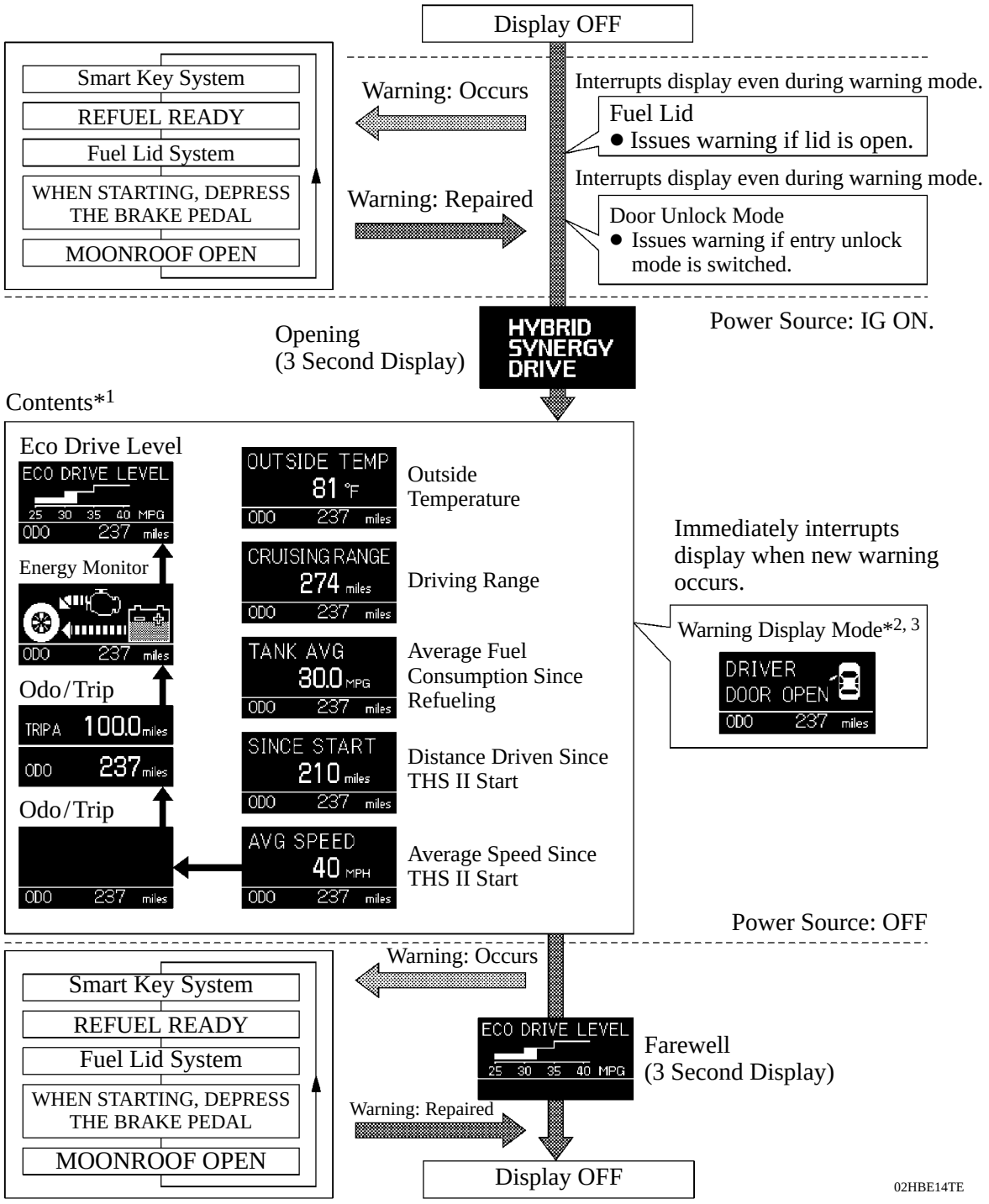

*1: The first screen to be displayed is the same as that displayed when the power source was last turned OFF.
*2: If multiple new warnings occur, they are automatically displayed at 2 second intervals.
*3: If the display is changed from warning display mode to another mode, it automatically returns to warning display mode after 6 seconds.

Downloaded from www.Manualslib.com manuals search engine

- The cruise information, odo/tripmeter, energy monitor and eco drive level are displayed in the following order, changing each time the DISP switch is pressed. However, pressing the DISP switch for approximately 1 second or more changes the display to the outside temperature indication.

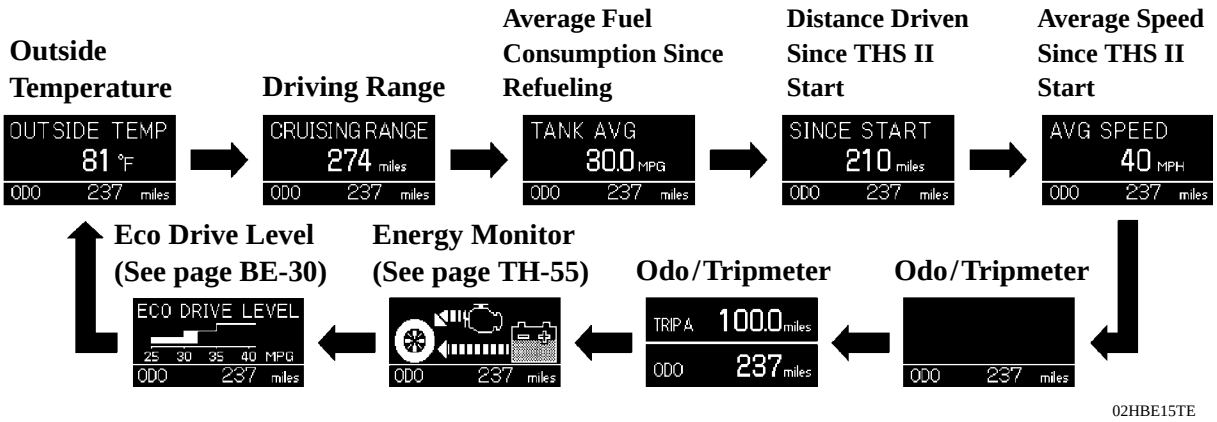

02HBE15TE

Cruise Information Mode

The following indication can be displayed in cruise information mode:

Information	Outline
Outside Temperature	Displayed in accordance with the outside temperature sensor signal from the A/C ECU.
Driving Range	● Calculated by the meter ECU, which continuously monitors and stores fuel consumption data and the residual fuel volume when IG-ON or READY has been selected. ● Updated every 1 mile (U.S.A. model) or 1 km (Canadian package model).
Average Fuel Consumption Since Refueling	● Calculated by the meter ECU, based on the distance driven since refueling and the fuel consumption volume (fuel injection signals from the No.1 injector). ● The meter ECU determines when the vehicle has been refueled through the signal from the fuel sender gauge. ● Updated every 10 seconds.
Distance Driven Since THS II Start	● Calculated by the meter ECU, based on the distance driven since THS II start. ● Updated every 1 mile (U.S.A. model) or 1 km (Canadian package model).
Average Speed Since THS II Start	● Calculated by the meter ECU based on the length of time and the distance driven since THS II Start. ● Updated every 10 seconds.

Downloaded from www.Manualslib.com manuals search engine

Eco Drive Level Display

General

- An eco drive level display is used, which changes the meter ring luminance and multi-information display in 4 levels, to indicate the average fuel consumption. This is calculated by the meter ECU, based on the fuel injection volume and the distance driven since the power source was turned to READY-ON.
- The meter ring luminance and multi-information display indicates are updated every 10 seconds.
- The eco drive level display illumination continues for 3 seconds after the power source is turned OFF.
- “EXCELLENT!” flashes on the multi-information display for 3 seconds after the power source is turned OFF when the average fuel consumption is 36 MPG or more.

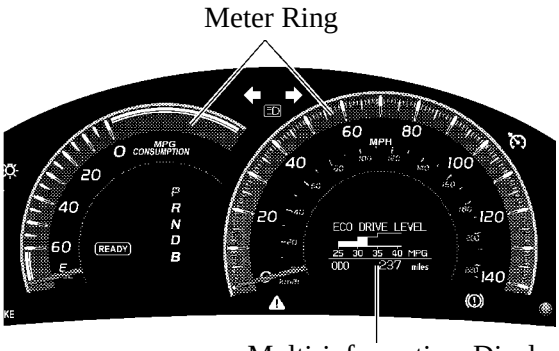

02HBE16Y

▶ Relationship Between Meter Ring Luminance and Multi-information Display Indications ◀

Average Fuel Consumption Level (MPG)	Meter Ring Luminance	Multi-information Display
Level 0 (25 or less)	OFF	 02HBE17TE
Level 1 (26 ~ 30)	Subtle illumination	 02HBE18TE
Level 2 (31 ~ 35)	Medium illumination	 02HBE19TE
Level 3 (36 or more)	Bright illumination	 02HBE20TE “EXCELLENT!” indication flashes.

Downloaded from www.Manualslib.com manuals search engine

Warning Mode

1) General

- When a warning is necessary, the warning display interrupts the multi-information display.
- The master warning light may illuminate or flash and the buzzer may sound depending on the item in the multi-information display.

Warning	Detail	Warning	Detail
CHECK HYBRID SYSTEM ODO 237 km ⚠ : Illuminates Buzzer: Sounds 02HBE21TE	THS II is malfunctioning.	SHIFT TO P WHEN STARTING ODO 237 km ⚠ : Flashes Buzzer: Sounds 02HBE26TE	Power switch is operated with power source IG-ON and shift lever in any position other than P.
LOW T. BATT STOP THE VEHICLE SHIFT TO P ODO 237 km ⚠ : Flashes Buzzer: Sounds 02HBE22TE	HV battery charge is low.	SHIFT TO P WHEN PARKING ODO 237 km ⚠ : Flashes Buzzer: Sounds 02HBE27TE	Any door is opened with power source READY-ON and shift lever in any position other than P.
PLEASE WAIT NOW OPENING ODO 237 km 02HBE23TE	Refueling standby condition.	HYBRID SYSTEM OVER HEAT ODO 237 km ⚠ : Illuminates Buzzer: Sounds 02HBE28TE	THS II parts overheat.
CLOSE FUEL LID ODO 237 km 02HBE24TE	Fuel lid is left open.	REFUEL READY ODO 237 km 02HBE29TE	Refueling is possible and fuel lid is open.
FWD MAINTENANCE MODE ODO 237 km 02HBE25TE	Maintenance mode.	FWD CERTIFICATION MODE ODO 237 km 02HBE30TE	Certification mode.

Downloaded from www.Manualslib.com manuals search engine

Warning	Detail	Warning	Detail
KEY IS NOT DETECTED ODO 237 km : Flashes Buzzer: Sounds 025BE19P	Key is not inside vehicle.	SHIFT TO P RANGE ODO 237 km : Flashes Buzzer: Sounds 025BE20P	Driver door is opened with shift lever in any position other than P.
S/T IS NOT UNLOCKED ODO 237 km : Flashes 025BE21P	Steering lock has not been released.	CHECK S/T LOCK ODO 237 km : Flashes 025BE22P	Steering lock is malfunctioning.
WHEN STARTING. DEPRESS THE BRAKE PEDAL ODO 237 km Buzzer: Sounds 02HBE31TE	Power source is switched from OFF to ACC twice with brake pedal released.	CHECK VSC SYSTEM ODO 237 km : Illuminates Buzzer: Sounds 025BE24P	TRAC and VSC are malfunctioning.
LOW KEY BATTERY ODO 237 km : Flashes Buzzer: Sounds 025BE25P	Key battery is low.	PARK BRAKE ODO 237 km : Flashes Buzzer: Sounds 025BE26P	Parking brake is still engaged with vehicle having reached a speed of 3 mph (5 km/h).
DRIVER DOOR OPEN ODO 237 km PASSENGER DOOR OPEN ODO 237 km RIGHT REAR DOOR OPEN ODO 237 km LEFT REAR DOOR OPEN ODO 237 km : Flashes* : Illuminates Buzzer: Sounds* 025BE27P	Any door is open. *: Vehicle having reached a speed of 3 mph (5 km/h).	HOOD OPEN ODO 237 km : Flashes* Buzzer: Sounds* 025BE28P	Engine hood is open. *: Vehicle having reached a speed of 3 mph (5 km/h).
		TRUNK OPEN ODO 237 km : Flashes* : Illuminates Buzzer: Sounds* 02HBE84TE	Luggage compartment door is open. *: Vehicle having reached a speed of 3 mph (5 km/h).

Downloaded from www.Manualslib.com manuals search engine

Warning	Detail	Warning	Detail
LOW ENGINE OIL PRESSURE ODO 237 km ⚠ : Flashes Buzzer: Sounds 025BE30P	Engine oil pressure is low. (Displayed while power source is READY ON)	WATER TEMP ODO 237 km ⚠ : Flashes Buzzer: Sounds 025BE31P	Engine coolant temperature is high.
LOW WASHER FLUID ODO 237 km ⚠ : Illuminates Buzzer: Sounds 025BE32P	Washer fluid level is low.	MOONROOF OPEN ODO 237 km ⚠ : Flashes Buzzer: Sounds 02HBE86TE	Sliding roof is open and driver door is open. (Displayed for 8 seconds when power source is IG-OFF)
MAINT REQD SOON ODO 4500 miles ⚠ : Illuminates Buzzer: Sounds 025BE34P	Comes on approximately 4,500 miles after engine oil is changed. (Only for U.S.A. models)	MAINT REQD ODO 5000 miles ⚠ : Illuminates Buzzer: Sounds 025BE35P	Comes on approximately 5,000 miles after engine oil has been changed. (Only for U.S.A. models)

2) Oil Replacement Reminder

- The oil replacement reminder appears to remind the driver to change the engine oil in accordance with the vehicle driven distance. This reminder is not provided on Canadian package models (reminder provided only on U.S.A. models).
- The meter ECU calculates the vehicle driven distance based on the signals from the skid control ECU.
- There are two types of warning: one is displayed when the vehicle driven distance has reached 4,500 miles or more since the last time the system was reset, and the other is displayed when the driven distance has reached 5,000 miles or more.
- The “OIL MAINT REQD SOON” warning appears for approximately 15 seconds after the power source is changed to IG-ON, and then goes off.
- The “OIL MAINT REQD” warning remains on while the power source is IG-ON.

4,500 miles or more

5,000 miles or more

025BE36P

- After the engine oil has been changed, the accumulated vehicle driven distance is stored in the meter ECU and should be reset through the operation of the “TRIP” meter reset knob. At this point, the accumulated vehicle driven distance is reset to zero.

Downloaded from www.Manualslib.com manuals search engine

Service Tip

The accumulated vehicle driven distance is stored in the meter ECU and can be reset using the following procedure.

1) Switch the power source to IG-ON and make sure that the LCD of the multi-information display/TRIP A display is on.
2) Switch the power source to OFF. While pushing the “TRIP” meter reset knob, switch the power source to IG-ON.
3) With the power source in the IG-ON mode, keep holding the “TRIP” meter reset knob (for at least five seconds) with the LCD counting down as shown below. Release the “TRIP” meter reset knob when the resetting is complete.
4) When the resetting is complete, the LCD displays “COMPLETE” for 1 second, the master warning light illuminates and the buzzer sounds once. Then, the LCD displays the odometer.

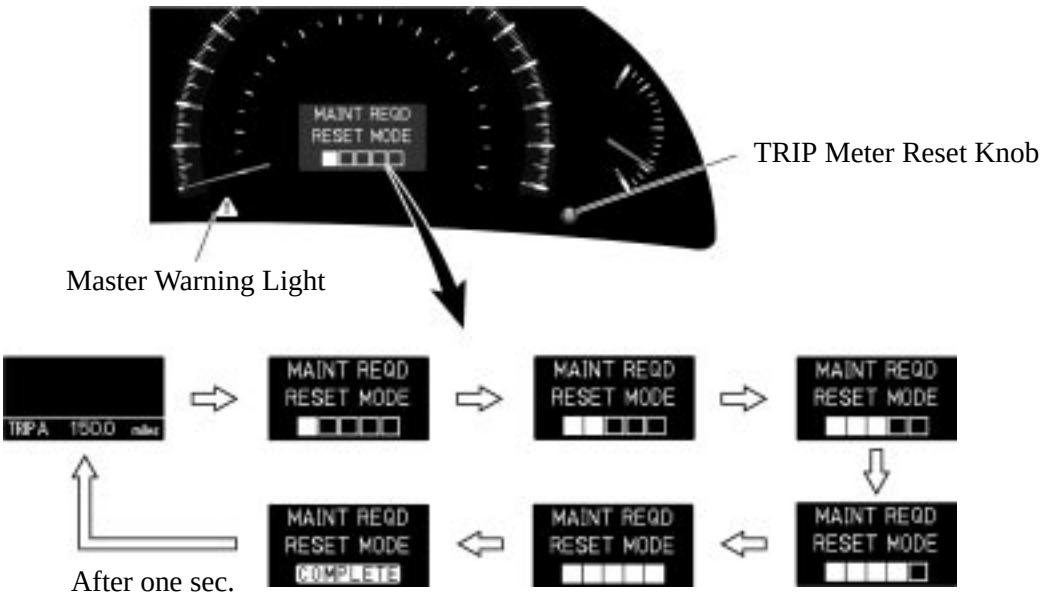

02HBE83Y

Downloaded from www.Manualslib.com manuals search engine

5. Buzzer

General

The table below shows the warning and reminder functions of the buzzer.

Function	Item
Warning	Multi-information Display Warning Mode Indication (See page BE-31)
Reminder	● Key Reminder (See page BE-115) ● Seat Belt Reminder (See page BE-146)

6. Active Circuit

Active circuits are used in the tire pressure warning light circuit in order to illuminate the light when there is an open or short circuit in the wiring harness. Thus, the malfunction detection area has been expanded.

▶ Active Circuit Conceptual Drawing ◀

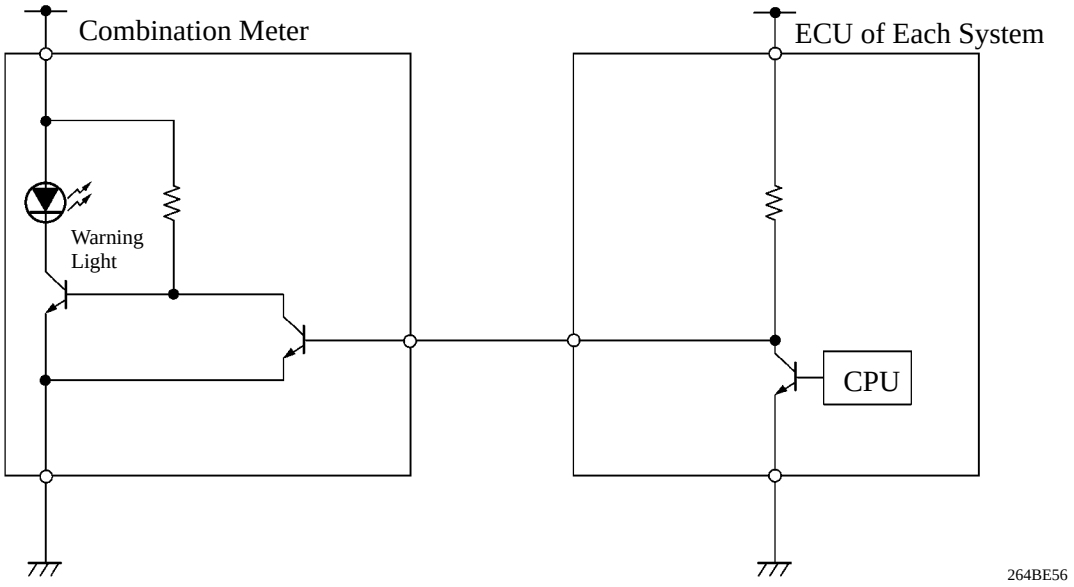

Downloaded from www.Manualslib.com manuals search engine

AIR CONDITIONING

■DESCRIPTION

- A ES27 type electric inverter compressor is used on the ’07 Camry Hybrid model. This compressor is driven by the alternating current that is supplied by the A/C inverter, which is integrated with the compressor. As a result, the air conditioning system is actuated without depending on the operation of the engine, thus realizing a comfortable air conditioning system and low fuel consumption.
- A compact, lightweight, and highly efficient electric water pump is used in order to ensure the proper heater performance while the engine is stopped.
- The PTC (Positive Temperature Coefficient) heater system contains a PTC heater that heats the air that has passed through the heater core to ensure proper heater performance.
- Automatic air conditioning using left/right independent temperature control and neural network control is standard equipment on all models.

It has the following features:

High Performance	● Neural network control is used so passengers can control the air conditioning accurately for maximum comfort. ● FACE mode for the rear seat is installed to blow warm air and ensure excellent heating performance. ● A pollen removal type filter, which removes pollen, is used as the clean air filter. ● The blower control has seven levels for precise control. ● A Plasmacluster™ generator is provided to improve the air quality and comfort in the cabin.
Lightweight	A BUS connector with a built-in IC is used in a lightweight wire harness design with a reduced number of wires. The use of this connector means that pulse pattern type servo motors are used.
Compact	A blower motor with a built-in blower motor controller is used in a compact construction.
Others	The following parts are used to ensure high cooling performance while realizing a compact and lightweight construction. ● ES27 type electric inverter compressor ● Electric water pump ● Semi-center Location A/C Unit ● RS (Revolutionary super-slim Structure) Evaporator ● SFA (Straight Flow Aluminum)-II Heater Core ● MF (Multi-Flow)-IV Sub -cool Condenser

Plasmacluster™ is a trademark of Sharp Corporation

Downloaded from www.Manualslib.com manuals search engine

■PERFORMANCE AND SPECIFICATION

1. Performance

Heater	Heat Output	W	6000
	Air Flow Volume	m^3/h	360
	Power Consumption	W	Maximum 210
Air Conditioning	Cooling Capacity	W	6100
	Air Flow Volume	m^3/h	530
	Power Consumption	W	Maximum 260

2. Specification

Ventilation and Heater Core	Heater Core	Type	SFA (Straight Flow Aluminum) -II
		Size W x H x L mm (in.)	201.5 x 150 x 27 (7.9 x 5.9 x 1.1)
		Fin Pitch mm (in.)	1.5 (0.06)
	Blower	Motor Type	K70 BMM
		Fan Type	Semi Sirocco
		Fan Size Dia. x H mm (in.)	165 x 70 (6.5 x 2.8)
Air Conditioning	Condenser	Type	MF (Multi-Flow) -IV
		Size W x H x L mm (in.)	706 x 267.8 x 22 (27.8 x 10.5 x 0.9)
		Fin Pitch mm (in.)	2.7 (0.1)
	Evaporator	Type	RS (Revolutionary super-slim Structure)
		Size W x H x L mm (in.)	266.3 x 251 x 38 (10.5 x 9.9 x 1.5)
		Fin Pitch mm (in.)	2.6 (0.1)
	Compressor	Type	ES27
	Refrigerant	Type	HFC 134a
		Charge Volume g	480 to 580

Downloaded from www.Manualslib.com manuals search engine

■SYSTEM DIAGRAM

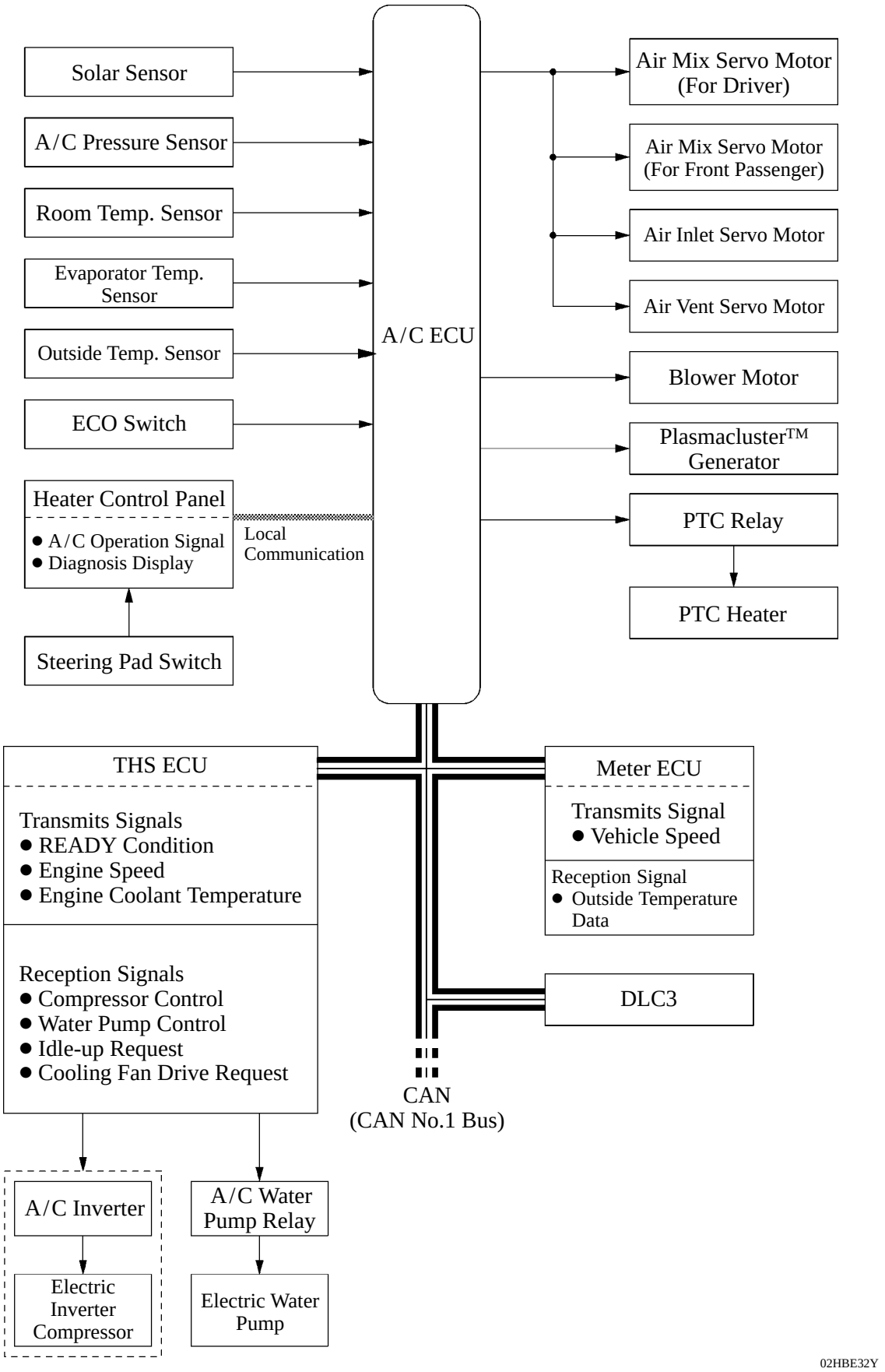

Downloaded from www.Manualslib.com manuals search engine

■LAYOUT OF MAIN COMPONENTS

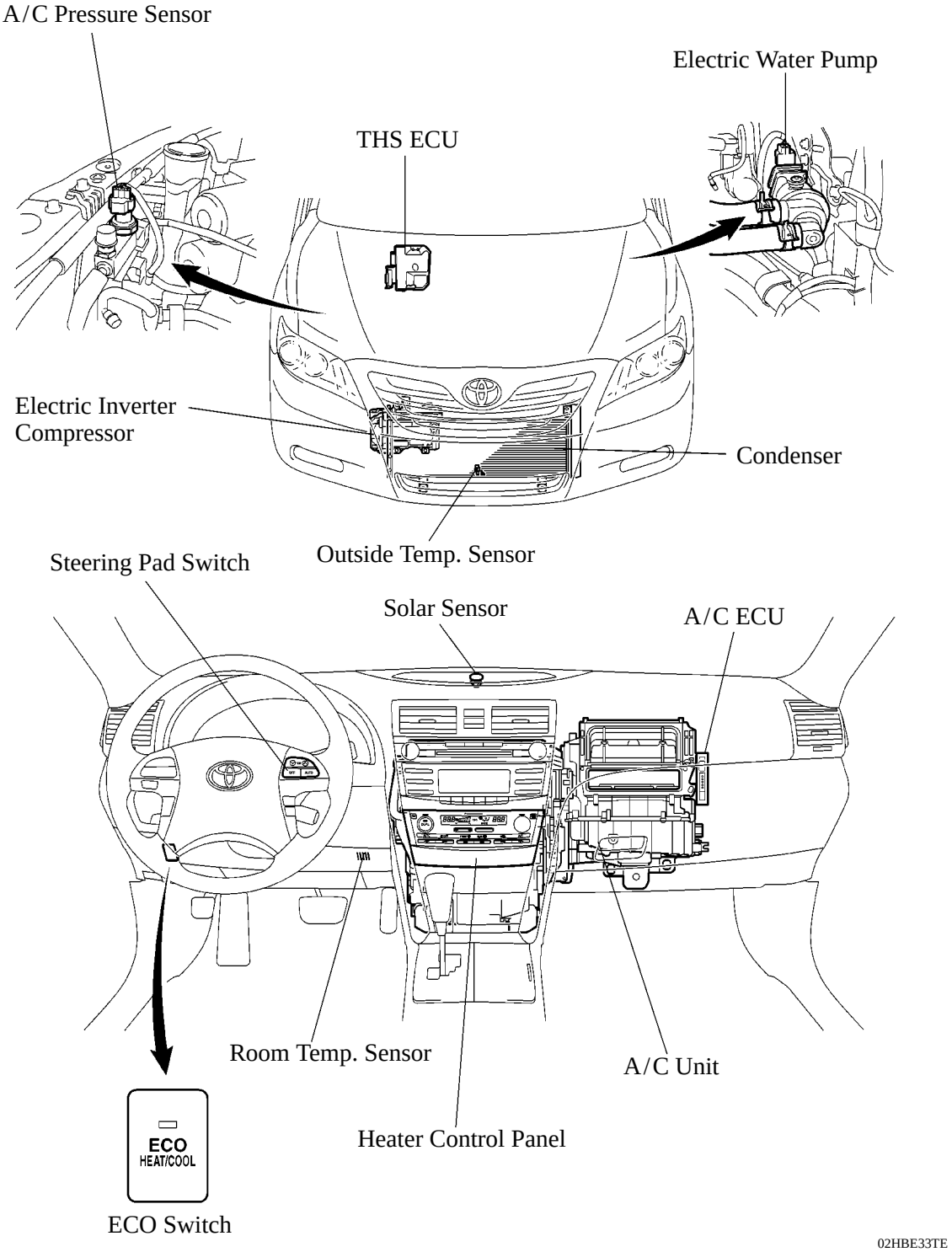

Downloaded from www.Manualslib.com manuals search engine

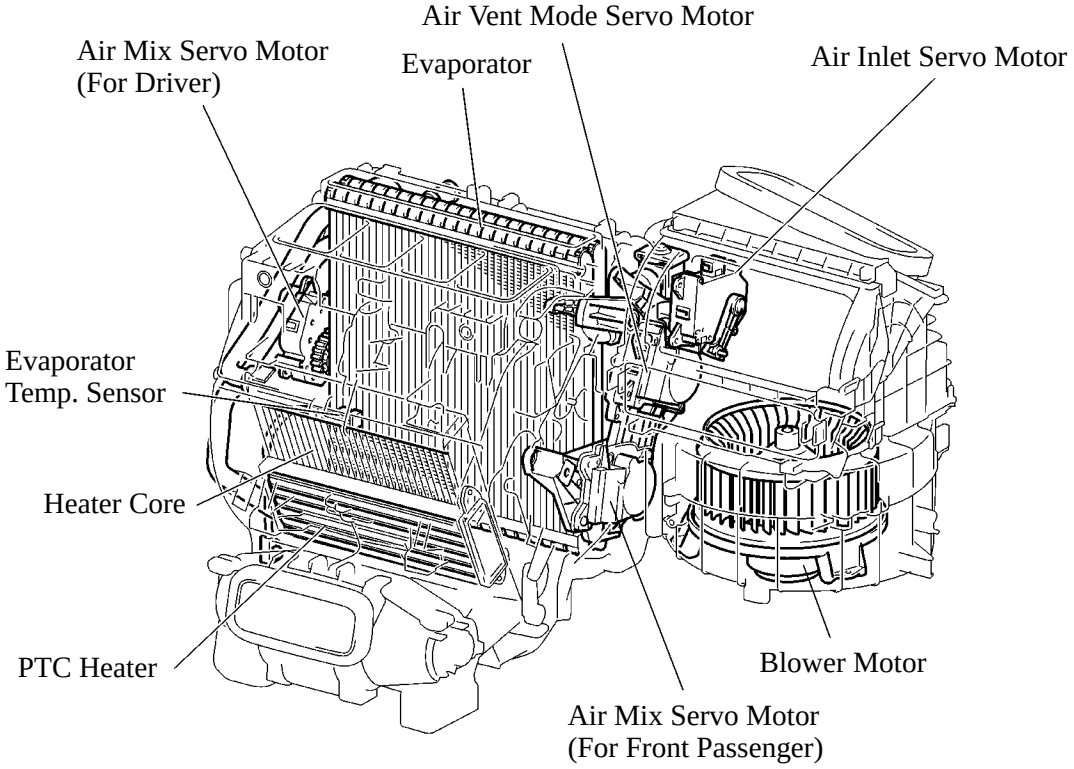

A/C Unit

02HBE34TE

Downloaded from www.Manualslib.com manuals search engine

■MODE POSITION AND DAMPER OPERATION

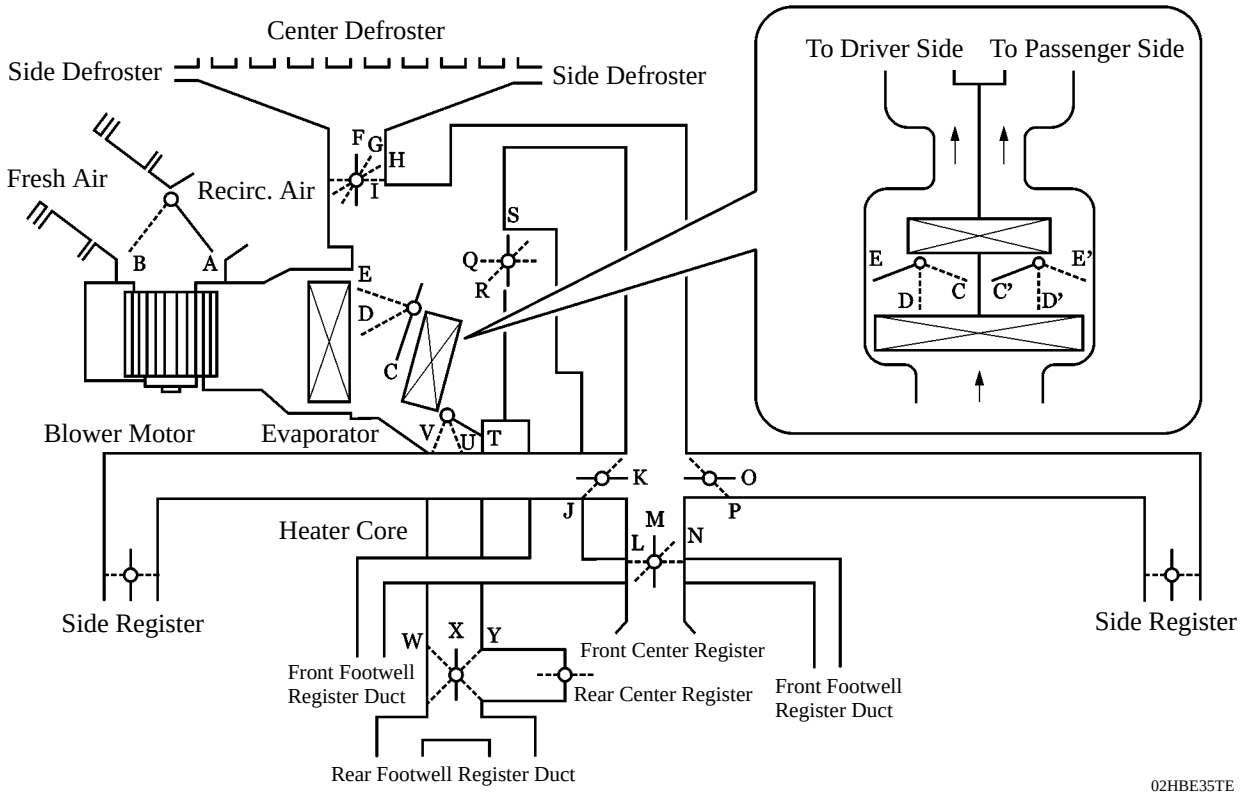

▶ Function of Main Damper ◀

Control Damper	Operation Position	Damper Position	Operation
Air Inlet Control Damper	FRESH	A	Brings in fresh air.
	RECIRC	B	Recirculates internal air.
Air Mix Control Damper	MAX COLD to MAX HOT Temp. Setting	C - D - E (C' - D' - E') (T - U - V)	Varies the mixture ratio of the fresh air and the recirculation air in order to regulate the temperature continuously from HOT to COLD.
Mode Control Damper	DEF 187BE28	F, J, L, P, S, Y	Defrosts the windshield through the center defroster, side defroster, and side register.
	FOOT/DEF 187BE27	G, J, L, P, Q, X	Defrosts the windshield through the center defroster, side defroster, side register, and rear center register, while air is also blown out from the front and rear footwell register ducts.
	FOOT 187BE26	H, J, L, P, Q, X	Air blows out of the foot well register dust, and side register. In addition, air blows out slightly from the center defroster and side defroster.
	BI-LEVEL 187BE25	I, K, N, O, R, X	Air blows out of the front and rear center registers, side register and front and rear footwell register ducts.
	FACE 187BE24	I, K, M, O, S, W	Air blows out of the front and rear center registers, and side register.

Downloaded from www.Manualslib.com manuals search engine

■AIR OUTLETS AND AIRFLOW VOLUME

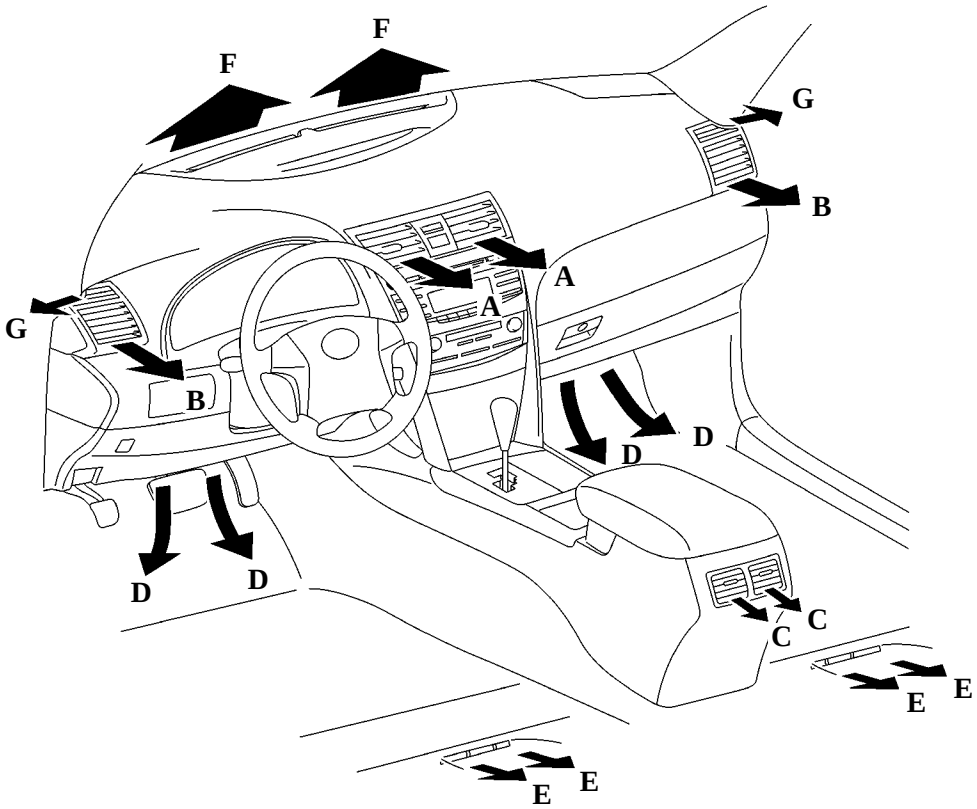

025BE43TE

INDICATION	MODE	SELECTION		FACE			FOOT		DEF	
				CTR	SIDE	RR	FR	RR	CTR	SIDE
		AUTO	MANUAL	A	B	C	D	E	F	G
	FACE	○	○	◯	◯	◯	—	—	—	—
	B/L-U*1	○	○	◯	◯	◯	○	○	—	—
	B/L-L*2	○	—	○	○	○	◯	◯	—	—
	FOOT-F*3	○	—	—	○	○	◯	○	○	○
	FOOT-R*4	○	○	—	○	○	◯	◯	○	○
	FOOT-D*5	○	—	—	○	○	○	○	○	○
	F/D	○	○	—	○	○	◯	◯	○	○
	DEF	○	○	—	○	—	—	—	◯	◯

02HBE36TE

The size of the circle ○ indicates the proportion of airflow volume.

*1: Greater airflow volume at the upper area. *2: Greater airflow volume at the lower area.
*3: Greater airflow volume at the front. *4: Greater airflow volume at the rear.
*5: Greater airflow volume at the defroster.

Downloaded from www.Manualslib.com manuals search engine

■CONSTRUCTION AND OPERATION

1. Heater Control Panel and Steering Pad Switch

- The air conditioning status is displayed on an LCD (Liquid Crystal Display) panel.
- Some of A/C operations (AUTO operation, A/C OFF and driver side temperature setting) can be performed using the steering pad switches (AUTO, OFF and TEMP) on the steering wheel.
- Along with the use of the right/left independent temperature control, the temperature control switches for the driver and the front passenger have been located closer to the respective seats to enhance their ease of use.

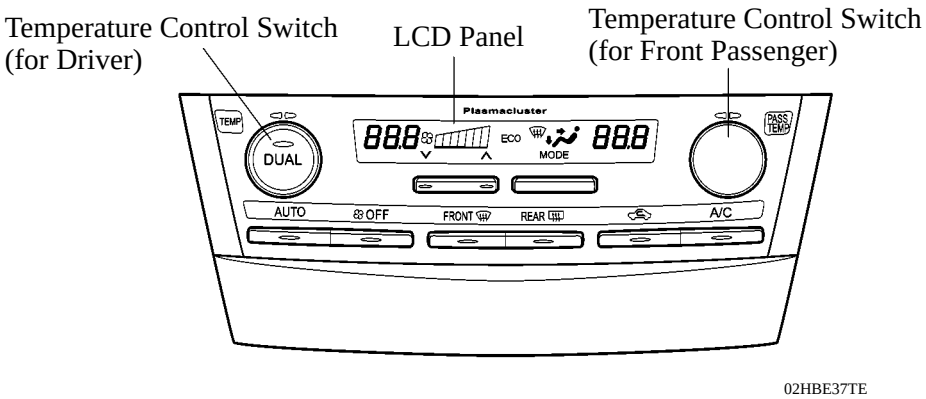

02HBE37TE

Heater Control Panel

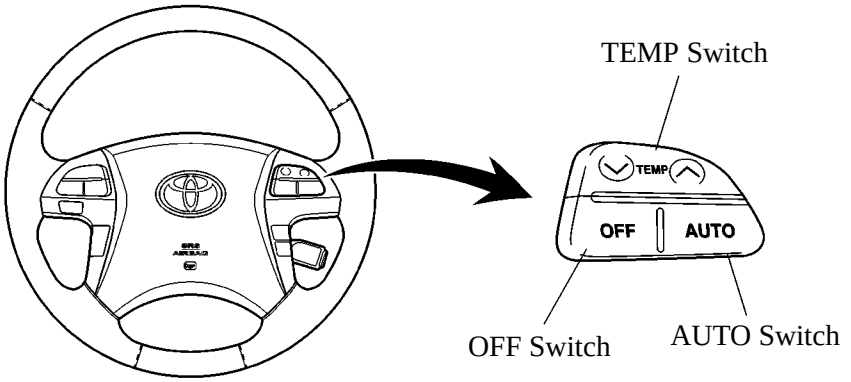

025BE46Y

Steering Pad Switch

Downloaded from www.Manualslib.com manuals search engine

2. Air Conditioning Unit

General

A semi-center location air conditioning unit, in which the evaporator and heater core are placed in the vehicle's longitudinal direction, is used. As a result, the air conditioning unit has been made compact and lightweight.

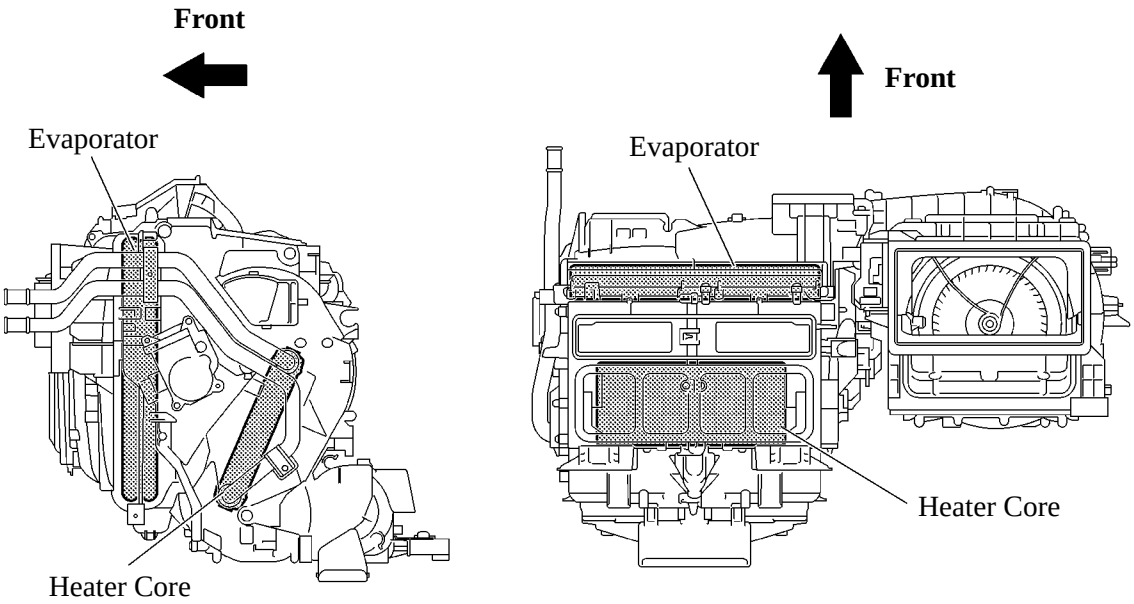

Side View **Top View**

02HBE38Y

Heater Core

A compact, lightweight, and highly efficient SFA (Straight Flow Aluminum)-II type heater core is used.

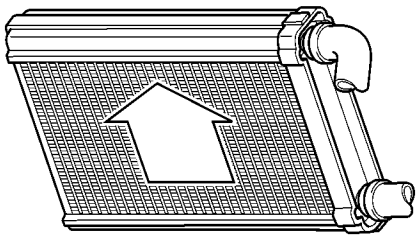

01YBE45Y

Downloaded from www.Manualslib.com manuals search engine

PTC Heater

- The PTC heater is located above the heater core in the air conditioning unit.
- The PTC heater consists of a PTC element, aluminum fin, and brass plate. When current is applied to the PTC element, it generates that to warm the air that passes through the unit. For details, PTC heater control on page BE-57.

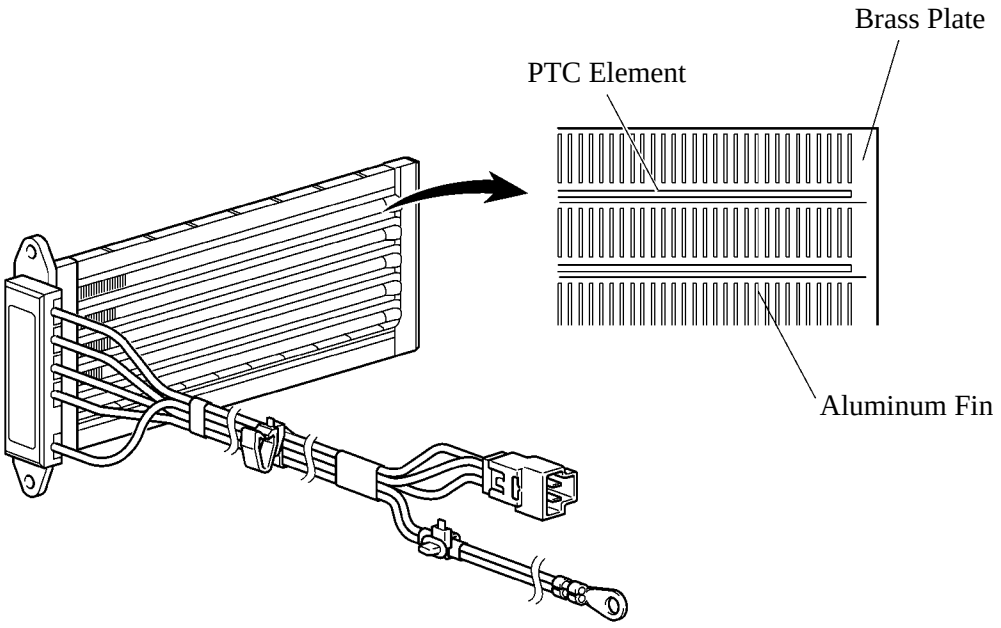

02HBE75Y

Downloaded from www.Manualslib.com manuals search engine

Evaporator

A semi-center location air conditioning unit, in which the evaporator and heater core are placed in the vehicle's longitudinal direction, is used. As a result, the air conditioning unit has been made compact and lightweight.

- A revolutionary super-slim structure evaporator is used.
- By placing the tanks at the top and the bottom of the evaporator unit and adopting a micropore tube construction, the following effects have been realized:

  a) The heat exchanging efficiency has been improved.

  b) The temperature distribution has been made more uniform.

  c) The evaporator has been made thinner. 58 mm (2.3 in.) → 38 mm (1.5 in.)
- The evaporator body has been coated with a type of resin that contains an antibacterial agent in order to minimize the source of foul odor and the propagation of bacteria. The substrate below this coating consists of a chromate-free layer to help protect the environment.

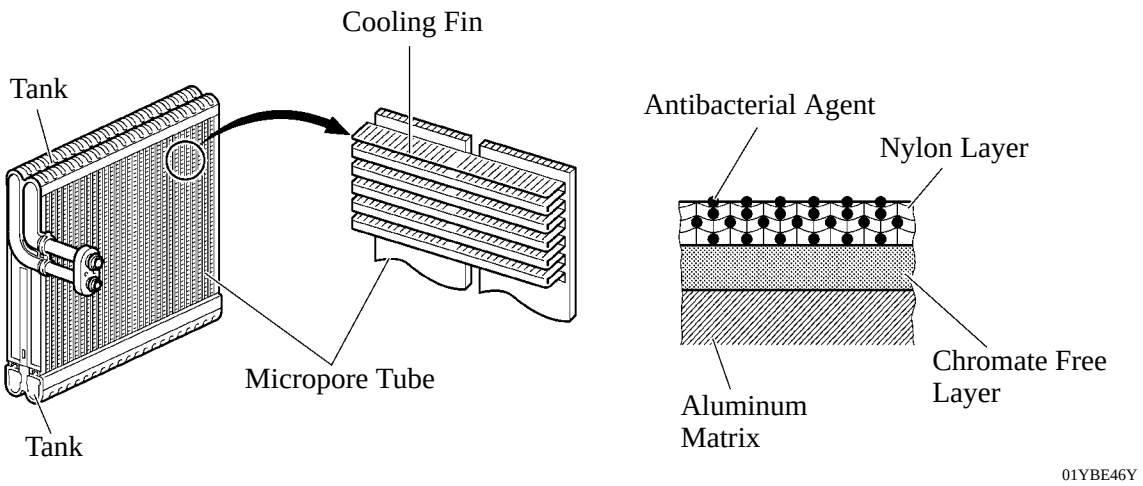

Evaporator Temp. Sensor

Evaporator temp. sensor detects the temperature of the cool air immediately past the evaporator in the form of resistance changes, and outputs it to the A/C ECU.

Blower Motor

The blower motor has an in-built blower controller, and is controlled with the duty control from the A/C ECU.

Downloaded from www.Manualslib.com manuals search engine

BUS connector

- A BUS connector is used in the wire harness connection that connects the servo motor from the A/C ECU.

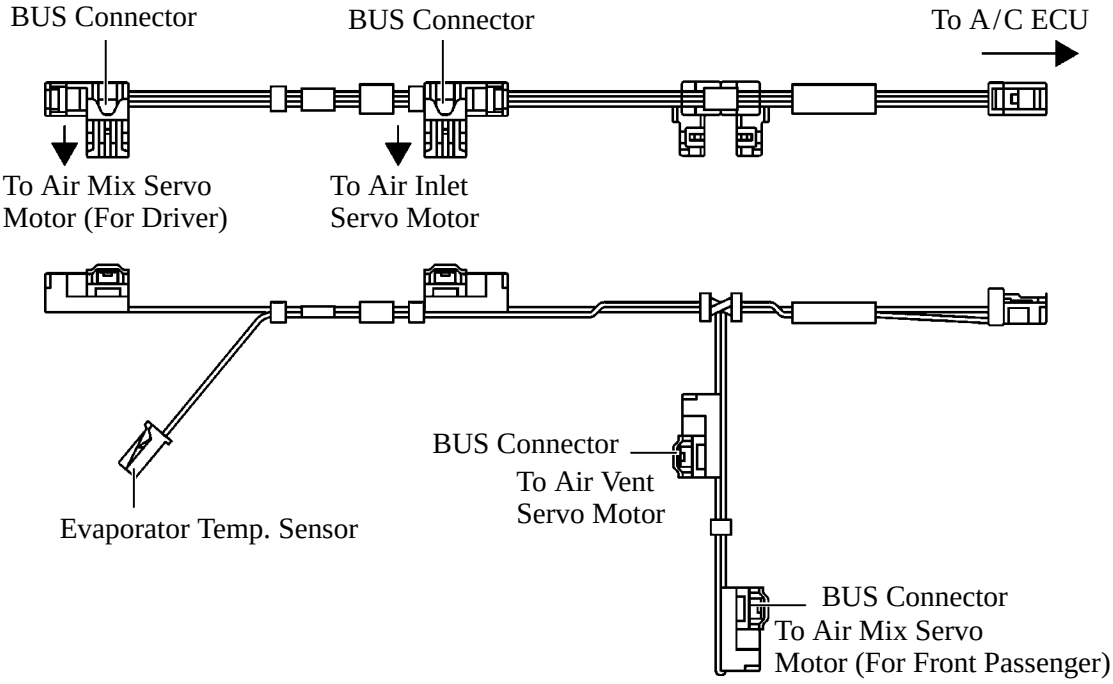

285BE43

- The BUS connector has a built-in communication/drive IC which communicates with each servo motor connector, actuates the servo motor, and has a position detection function. This enables bus communication for the servo motor wire harness, for a more lightweight construction and a reduced number of wires.

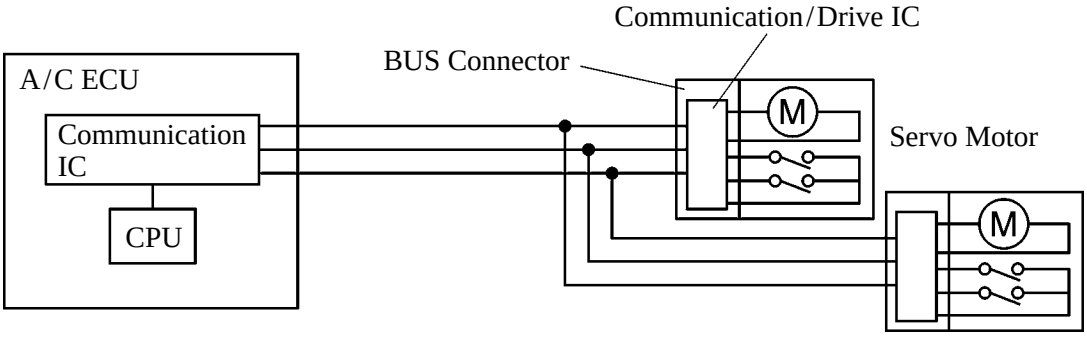

With BUS Connector

285BE44

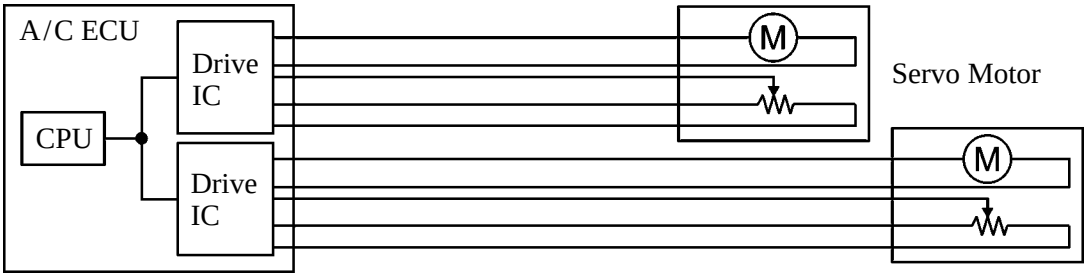

Without BUS Connector

285BE45

Downloaded from www.Manualslib.com manuals search engine

Servo Motor

The pulse pattern type servo motor consists of a printed circuit board and servo motor. The printed circuit board has three contact points, and transmits to the A/C ECU two ON-OFF signals for the difference of the pulse phase. The smart connector detects the damper position and movement direction with this signal.

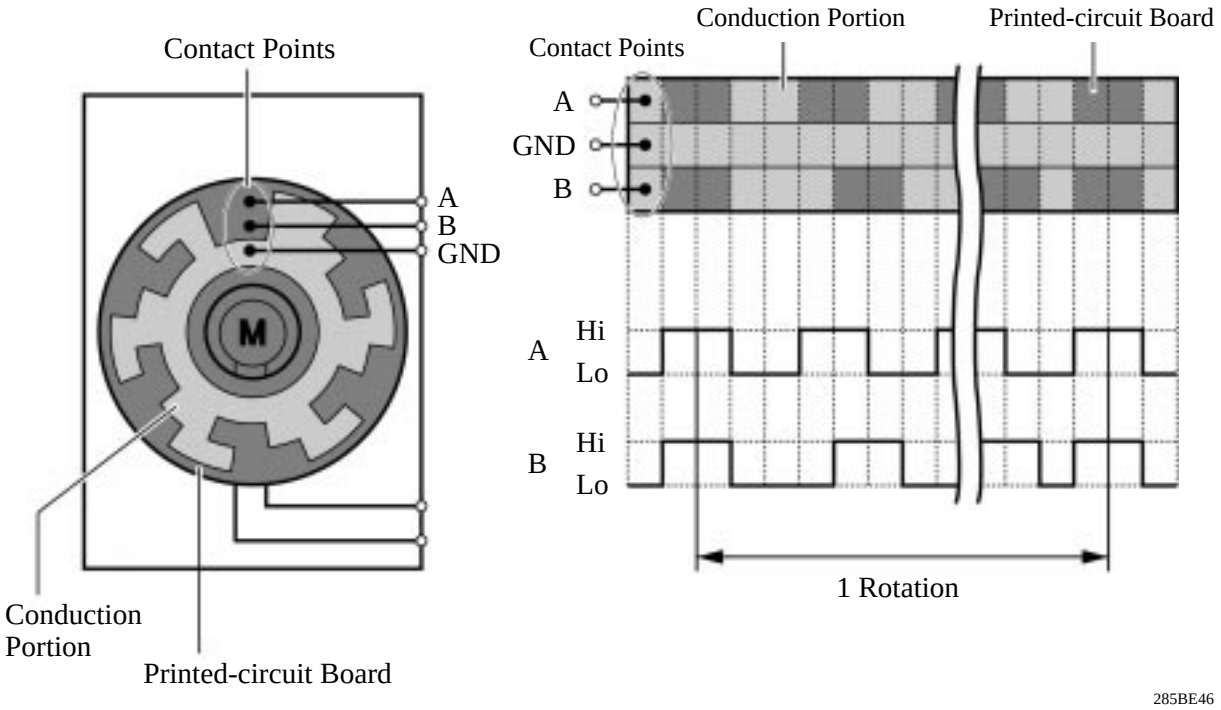

NOTE: If the A/C ECU is reset after the auxiliary battery or A/C ECU is removed and installed, or the auxiliary battery voltage decreases, the A/C ECU automatically performs the initialization to detect the original positions of servo motors when the power source is switched to IG-ON. Although the DEF indicator on the heater control panel blinks during the initialization, this does not indicate a malfunction.

Downloaded from www.Manualslib.com manuals search engine

Clean Air Filter

A pollen removal type filter is used. This filter excels in the removal of dust and pollen. The filter is made of polyester. Thus, it can be disposed of easily as a non hazardous combustible material, a feature that is provided in consideration of the environment.

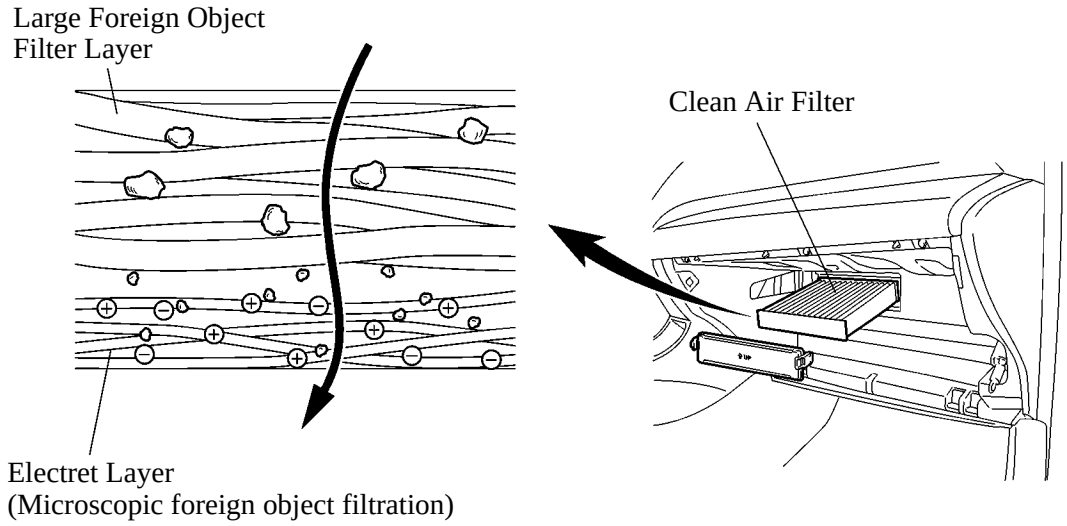

025BE47Y

Service Tip

- The filter used on U.S.A. models should be changed at 30,000 miles (cleaning interval: 15,000 miles).
- The filter used on Canadian package models should be changed at 16,000 km (cleaning interval: 8,000 km).
  However, observation of these guidelines should depend on the usage conditions (or environment).

Downloaded from www.Manualslib.com manuals search engine

3. Condenser

- A MF (Multi-Flow) type condenser is used. The condenser consists of two cooling portions: a condensing portion and a super-cooling portion, and gas-liquid separator (modulator) are integrated together. This condenser uses a sub-cool cycle that offers excellent heat-exchange performance.
- In the sub-cool cycle, after the refrigerant passes through the condensing portion of the condenser, both the liquid refrigerant and the gaseous refrigerant that could not be liquefied are cooled again in the super-cooling portion. Thus, the refrigerant is sent to the evaporator in an almost completely liquefied state.

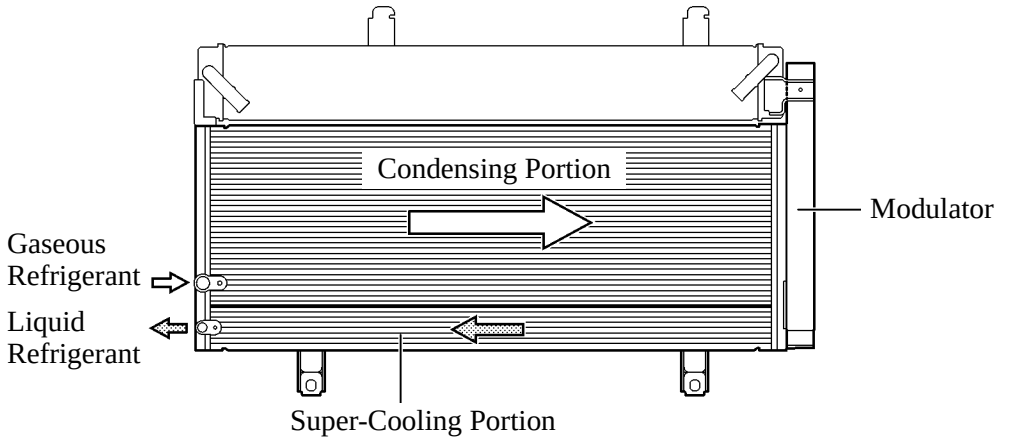

02HBE39Y

Downloaded from www.Manualslib.com manuals search engine

4. A/C Compressor

General

- Along with the installation of the hybrid unit on the ’07 Camry Hybrid model, an ES27 electric inverter compressor that is driven by a motor is used. The basic construction and operation of this compressor are the same as the ordinary scroll compressor, except that it is driven by an electric motor.
- The Air Conditioning (A/C) inverter is integrated with the compressor.
- The electric motor is actuated by 3-phase alternating current (244.8 V) supplied by the A/C inverter. As a result, the air conditioning control system on the ’07 Camry Hybrid model is actuated without depending on the operation of the engine, thus realizing a comfortable air conditioning system and low fuel consumption.
- Due to the use of an electric inverter compressor, the compressor speed can be controlled at the required speed calculated by the A/C ECU. Thus, the cooling and dehumidification performance and power consumption have been optimized.
- Low-moisture permeation hoses are used for the suction and discharge hoses at the compressor in order to minimize the entry of moisture into the refrigeration cycle.
- The compressor uses high-voltage alternating current. If a short or open circuit occurs in the compressor wiring harness, the THS ECU will cut off the A/C inverter circuit in order to stop the power supply to the compressor.
- For details on the electric inverter compressor control effected by the A/C ECU, see page BE-59.

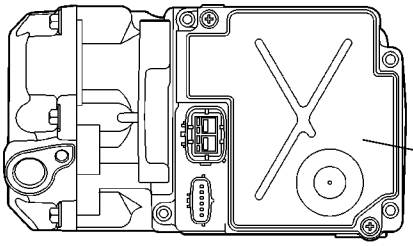

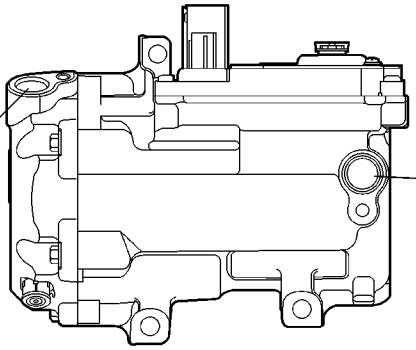

02HBE40Y

Service Tip

In order ensure the proper insulation of the internal high-voltage portion of the compressor and the compressor housing, the ’07 Camry Hybrid model has adopted a compressor oil (ND11) with a high level of insulation performance. Therefore, never use a compressor oil other than the ND11 type compressor oil or its equivalent.

Downloaded from www.Manualslib.com manuals search engine

Construction

- The electric inverter compressor consists of a spirally wound fixed scroll and variable scroll that form a pair, a brushless motor, an oil separator, a motor shaft and A/C inverter.
- The fixed scroll is integrated with the housing. Because the rotation of the shaft causes the variable scroll to revolve while maintaining the same posture, the volume of the space that is partitioned by both scrolls varies to perform the suction, compression, and the discharge of the refrigerant gas.
- Locating the suction port directly above the scrolls enables direct suction, thus realizing improved suction efficiency.
- Containing a built-in oil separator, this compressor is able to separate the compressor oil that is intermixed with the refrigerant and circulates in the refrigeration cycle, thus realizing a reduction in the oil circulation rate.
- This inverter converts the HV battery's nominal voltage of DC 244.8 V into AC and supplies power to operate the compressor.

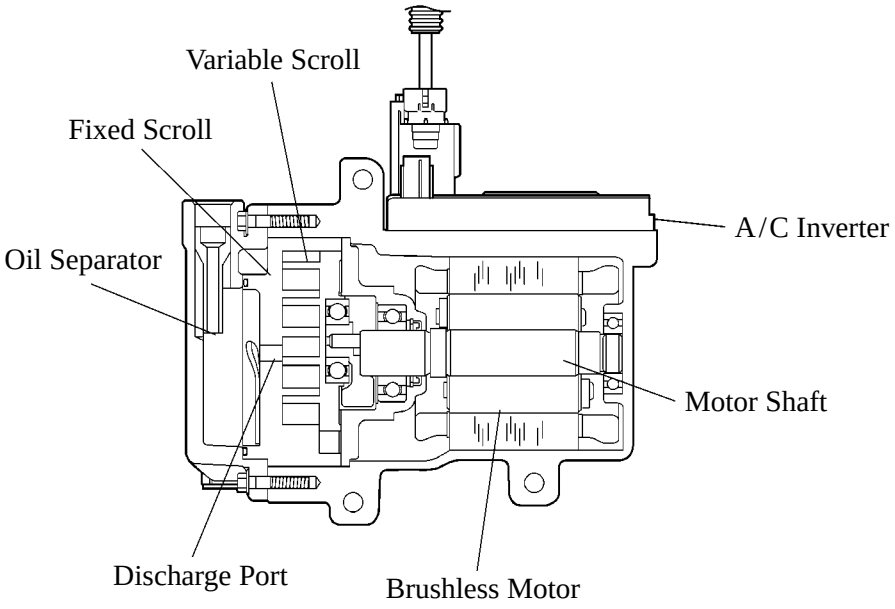

▶ System Diagram ◀

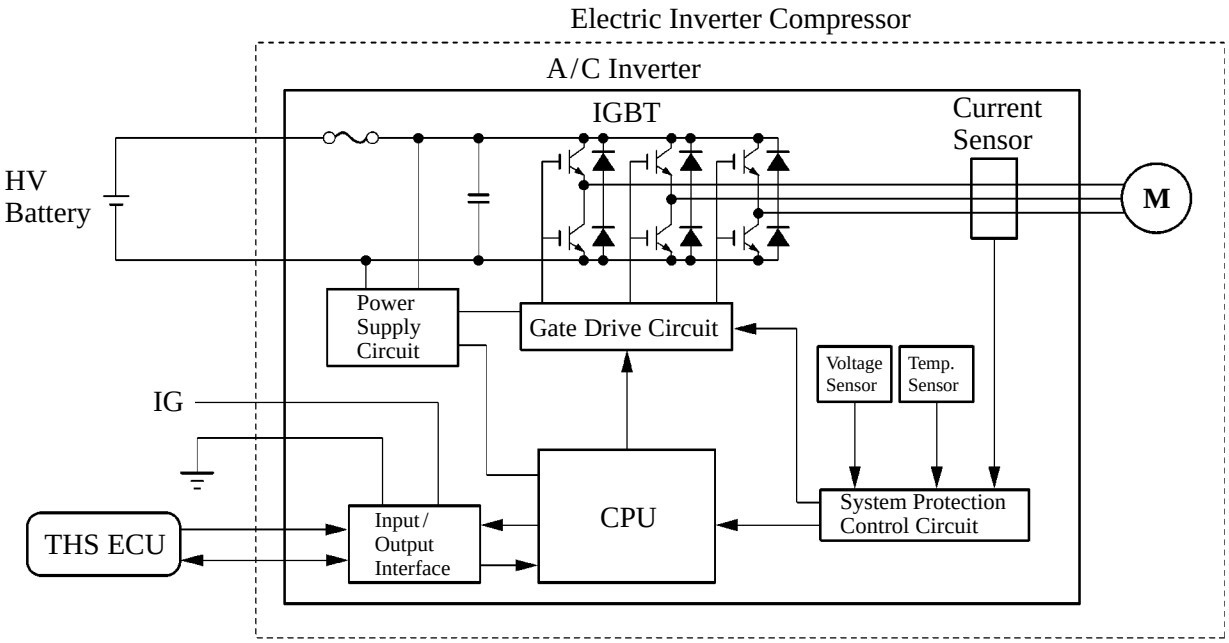

Downloaded from www.Manualslib.com manuals search engine

Operation

1) Suction

As the capacity of the compression chamber, which is created between the variable scroll and the fixed scroll, increases in accordance with the revolution of the variable scroll, refrigerant gas is drawn in from the intake port.

2) Compression

From the state at which the suction process has been completed, as the revolution of the variable scroll advances further, the capacity of the compression chamber decreases gradually. Consequently, the refrigerant gas that has been drawn in becomes compressed gradually and is sent to the center of the fixed scroll. The compression of the refrigerant gas is completed when the variable scroll completes approximately 2 revolutions.

3) Discharge

When the compression of the refrigerant gas is completed and the refrigerant pressure becomes high, the refrigerant gas discharges through the discharge port located in the center of the fixed scroll by pushing the discharge valve.

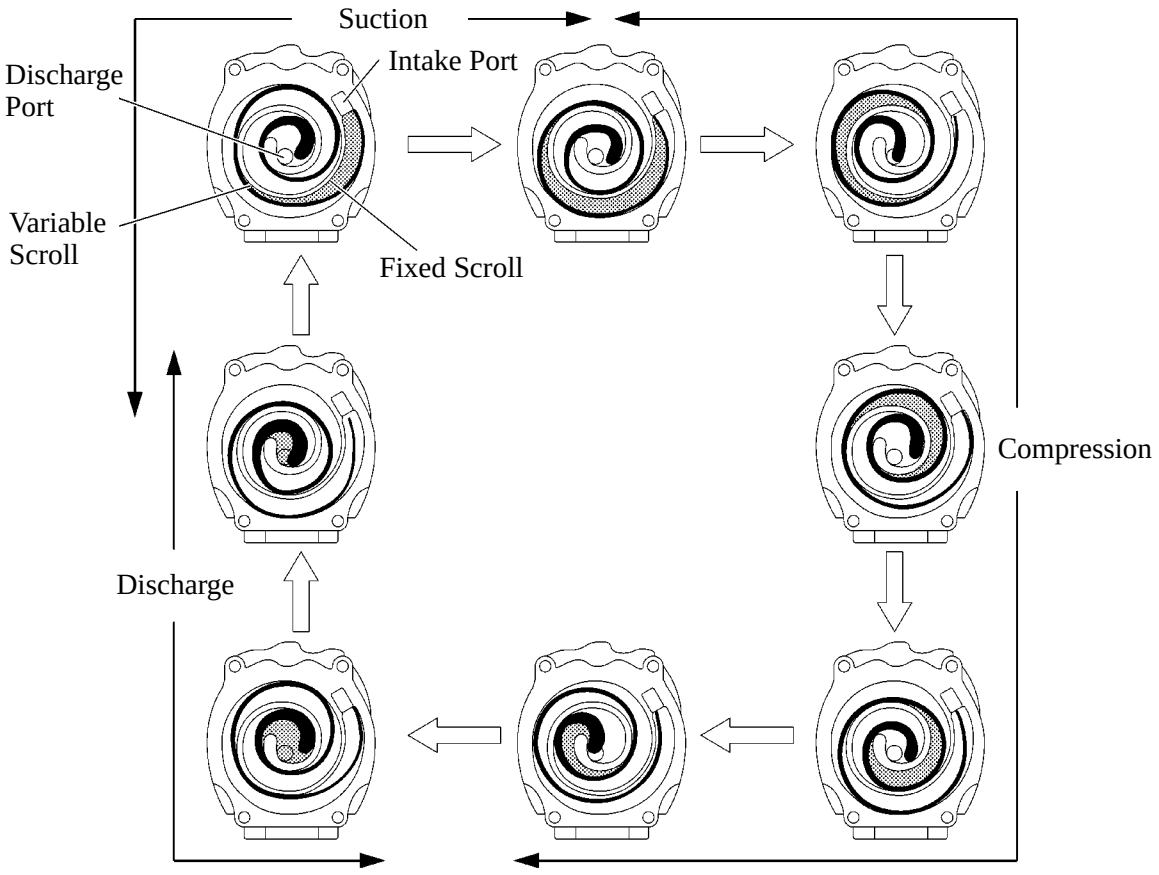

165BE23

Downloaded from www.Manualslib.com manuals search engine

5. Electric Water Pump

- The ’07 Camry Hybrid model uses an electric water pump for air conditioning. This provides a stable heater performance even if the engine is stopped because of a function of the THS-II.
- The ’07 Camry Hybrid model uses a new type of electrical water pump in which the water flow resistance has been reduced.

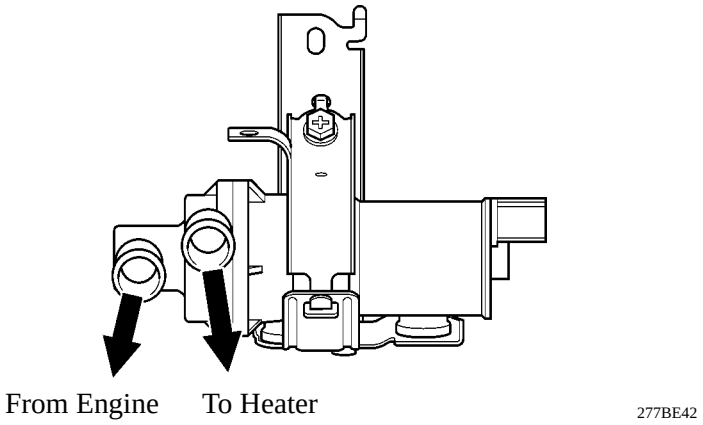

6. A/C Pressure Sensor

A/C pressure sensor detects the refrigerant pressure and outputs it to the A/C ECU in the form of voltage changes.

7. Room Temp. Sensor and Outside Temp. Sensor

- The room temp. sensor detects the room temperature based on changes in the resistance of its built-in thermistor and sends a signal to the A/C ECU.
- The outside temp. sensor detects the outside temperature based on changes in the resistance of its built-in thermistor and sends a signal to the A/C ECU.

8. Solar Sensor

- The solar sensor consists of a photo diode, two amplifier circuits for the solar sensor, and a frequency converter circuit for the light control sensor.
- A solar sensor detects (in the form of changes in the current that flows through the built-in photo diode) the changes in the amount of sunlight from the LH and RH sides (2 directions) and outputs these sunlight strength signals to the A/C ECU.

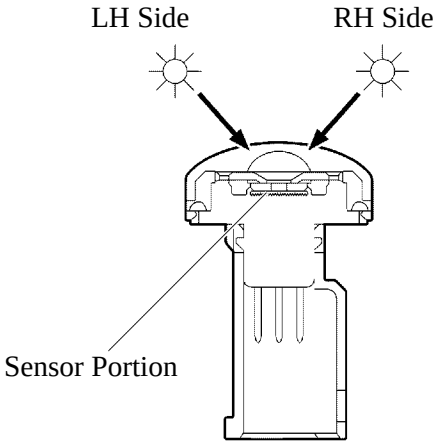

Internal circuit of the solar sensor

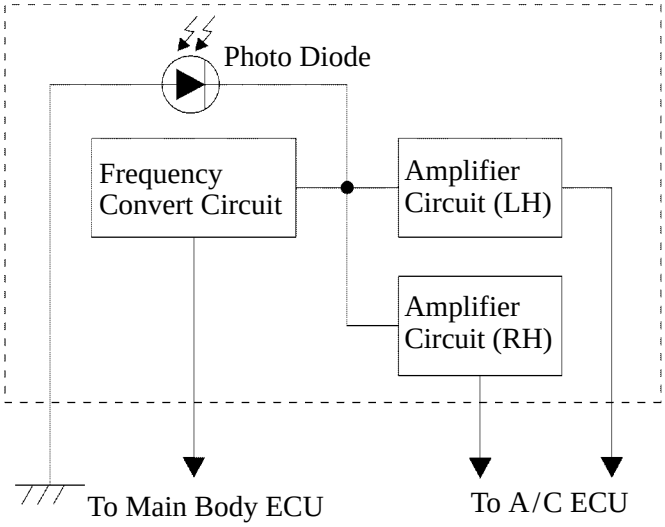

Downloaded from www.Manualslib.com manuals search engine

9. Plasmacluster™ Generator

General

- A Plasmacluster™ generator is provided inside the air duct of the side register on the driver seat side to improve the air quality and comfort in the cabin.
- This generator is controlled by the A/C ECU and operates in conjunction with the blower motor.

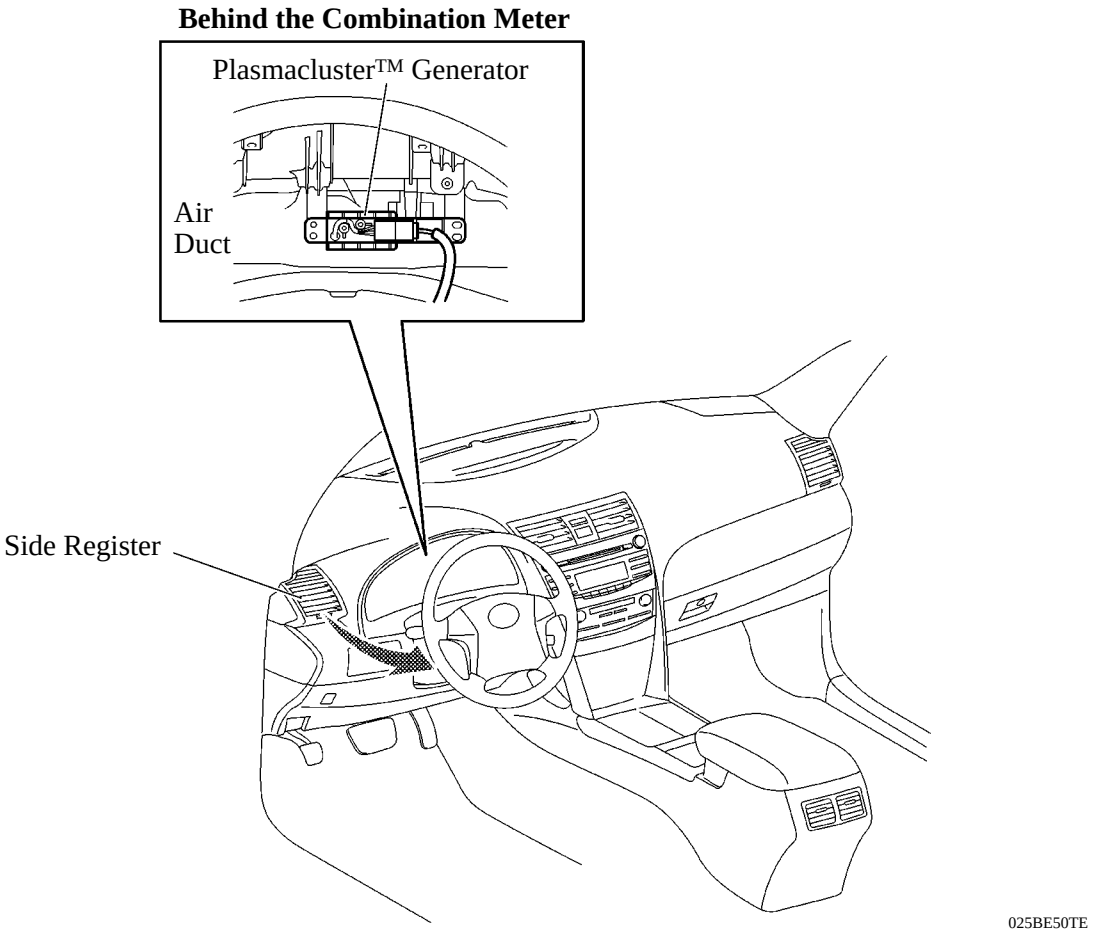

NOTE:

- The Plasmacluster™ generator uses a high voltage, which is hazardous. Therefore, if the Plasmacluster™ generator requires repairs, be sure to have them done at a Toyota dealer.
- Do not apply any type of spray (such as a cleaning solvent or hair spray) or stick any foreign matter into the Plasmacluster™ ion outlet, as this could cause improper operation or a malfunction.
- After use, dust may accumulate around the side register on the driver seat side. If this occurs, press the OFF switch on the heater control panel to stop the blower motor before cleaning the area.
- It is normal for the Plasmacluster™ generator to emit a slight sound during operation. This sound is created when electrons collide with the electrode while Plasmacluster™ ions are being generated.

Downloaded from www.Manualslib.com manuals search engine

Operation

The Plasmacluster™ generator produces positive and negative ions from the water molecules (H_2O) and oxygen molecules (O_2) in the air, and emits them into the air. These ions reduce airborne germs.

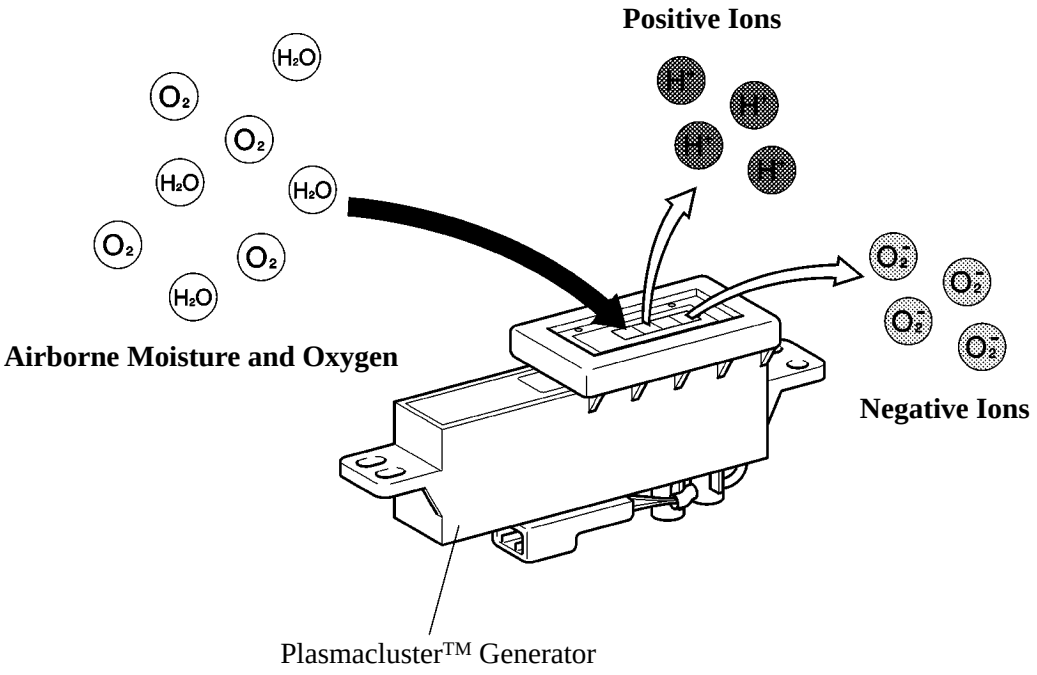

025BE51TE

Downloaded from www.Manualslib.com manuals search engine

■SYSTEM CONTROL

1. General

The air conditioning system has the following controls.

Control		Outline
Neural Network Control [See page BE-58]		This control is capable of effecting complex control by artificially simulating the information processing method of the nervous system of living organisms in order to establish a complex input/output relationship that is similar to a human brain.
Outlet Air Temp. Control		Based on the temperature set at the temperature control switch, the neural network control calculates the outlet air temperature based on the input signals from various sensors.
		The temperature settings for the driver and front passenger are controlled independently in order to provide separate vehicle interior temperatures for the right and left sides of the cabin. Thus, air conditioning that accommodates the occupants' preferences has been realized.
Blower Control		Controls the blower motor in accordance with the airflow volume that has been calculated by the neural network control based on the input signals from various sensors.
Air Outlet Control		Automatically switches the air outlets in accordance with the outlet mode that has been calculated by the neural network control based on the input signals from various sensors.
		In accordance with the engine coolant temperature, outside air temperature, amount of sunlight, required blower volume, outlet temperature, and vehicle speed conditions, this control automatically switches the blower outlet to FOOT/DEF mode to prevent the windows from becoming fogged when the outside air temperature is low.
Air Inlet Control		Automatically controls the air inlet control damper to achieve the calculated required outlet air temperature.
Electric Inverter Compressor Control [See page BE-59]	Compressor Speed Control	The A/C ECU calculates the target speed of the compressor based on the target evaporator temperature (which is calculated by the room temperature sensor, outside temp. sensor, and the solar sensor) and the actual evaporator temperature that is detected by the evaporator temperature sensor in order to control the compressor speed.
		The A/C ECU calculates the target evaporator temperature, which includes corrections based on the room temperature sensor, outside temp. sensor, the solar sensor, and evaporator temperature sensor. Accordingly, the A/C ECU controls the compressor speed to an extent that would not inhibit the proper cooling performance or defogging performance.
PTC Heater Control		When the THS II is operating (READY), and the blower motor is turned ON, the A/C ECU turns ON the PTC heater if the conditions listed below are met. ● Engine coolant temperature is below specified temperature. ● Outside temperature is below specified temperature (DEF mode). ● Tentative air mix damper opening angle is above the specified value (MAX HOT).
Electric Water Pump Control		When the blower motor is ON and the engine has been stopped by the THS II control, the A/C ECU turns ON the electric water pump in accordance with the judgment of the air mix damper opening.
ECO Mode Control [See page BE-60]		When the ECO switch is turned ON, the A/C ECU limits the air conditioning system performance.
Rear Window Defogger Control [See page BE-159]		Operates the rear defogger and outside rear view mirror heaters on for 15 minutes to 60 minutes when the rear defogger button is pressed. Switches them off if the button is pressed again while they are operating.
Outside Temperature Indication Control		Calculates the outside temperature using signals transmitted by the outside temperature sensor. Calculated values are corrected by the A/C ECU and then indicated on the multi-information display.
Self-Diagnosis [See page BE-62]		A DTC (Diagnostic Trouble Code) is stored in the memory when the A/C ECU detects a problem with the air conditioning system.

Downloaded from www.Manualslib.com manuals search engine

2. Neural Network Control

- In previous automatic air conditioning systems, the A/C ECU determined the required outlet air temperature and blower air volume in accordance with a calculation formula and based on information received from the sensors. However, because people's senses are rather complex, a given temperature is sensed differently, depending on the environment in which the person is situated. For example, a given amount of solar radiation can feel comfortably warm in a cold climate, or extremely uncomfortable in a hot climate. Therefore, as a technique for effecting a higher level of control, a neural network is used in the automatic air conditioning system. With this technique, data that has been collected under varying environmental conditions is stored in the A/C ECU. The A/C ECU can then effect control to provide enhanced air conditioning comfort.
- The neural network control consists of neurons in the input layer, intermediate layer, and output layer. The input layer neurons process the input data of the outside temperature, the amount of sunlight, and the room temperature based on the outputs of the switches and sensors, and output them to the intermediate layer neurons. Based on this data, the intermediate layer neurons adjust the strength of the links among the neurons. The sum of these is then calculated by the output layer neurons in the form of the required outlet temperature, solar correction, target airflow volume, and outlet mode control volume. The A/C ECU controls the servo motors and blower motor in accordance with the control volumes that have been calculated by the neural network control.

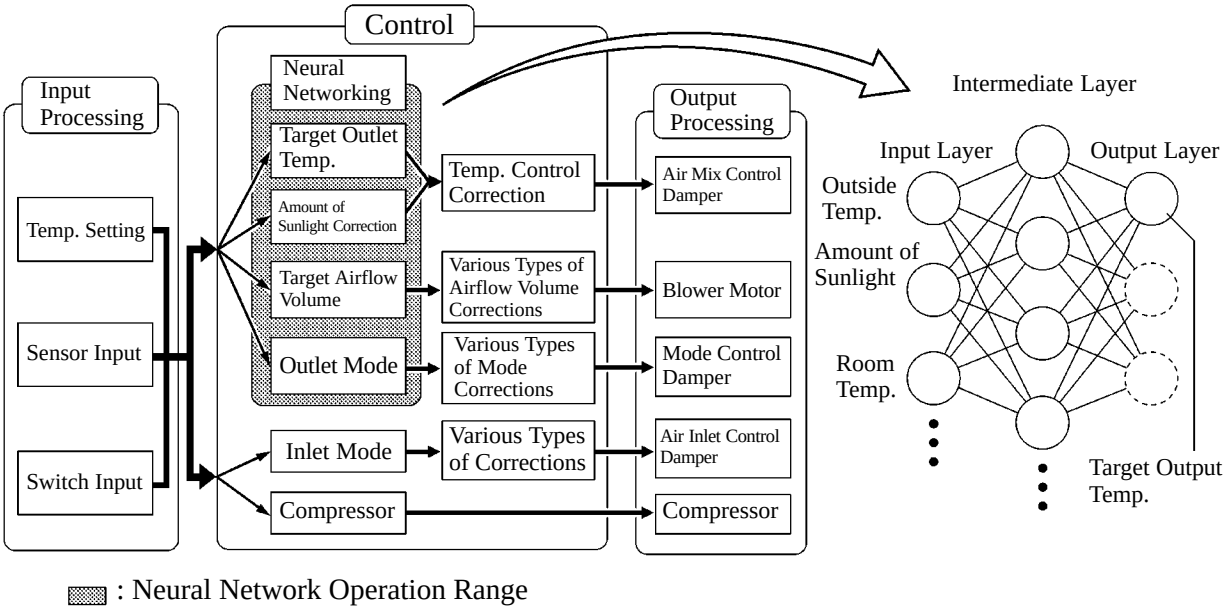

Downloaded from www.Manualslib.com manuals search engine

3. Electric Inverter Compressor Control

Compressor Speed Control

- The A/C ECU calculates the target compressor speed based on the target evaporator temperature (calculated from the room temperature sensor, outside temp. sensor, and solar sensor) and the actual evaporator temperature detected by the evaporator temperature sensor. Then, the A/C ECU transmits the target speed to the THS ECU. The THS ECU controls the A/C inverter based on the target speed data in order to control the compressor to a speed that suits the operating condition of the air conditioning system.
- The A/C ECU calculates the target evaporator temperature, which includes corrections based on the room temperature sensor, outside temp. sensor, solar sensor, and evaporator temperature sensor. Accordingly, the A/C ECU controls the compressor speed to an extent that does not inhibit the proper cooling performance or defogging performance. As a result, comfort and low fuel consumption can be realized.

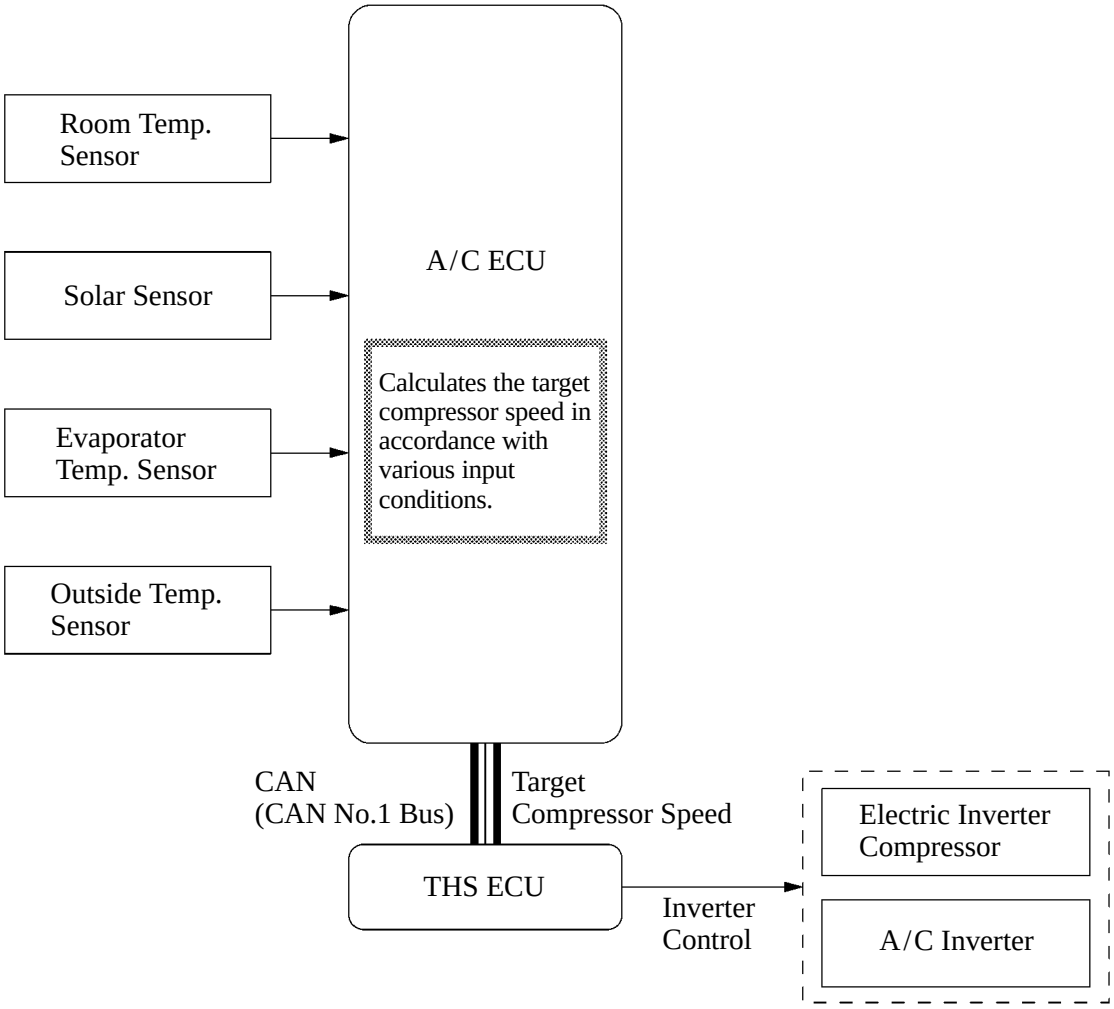

02HBE41Y

Downloaded from www.Manualslib.com manuals search engine

4. Eco Mode Control

General

- Eco mode control limits the air conditioning system performance during heating and cooling and increases the amount of engine OFF time, thus improving the fuel economy.
- Eco mode control is activated by pressing the momentary type ECO switch on the instrument panel. “ECO” is displayed on the heater control panel LCD during this control.
- Eco mode control during heating and cooling, and its cancel conditions are shown in the table below.

ECO Mode Control		Eco Mode Cancel Conditions
Heating Mode	● Stops PTC heater operation. ● Increases the amount of engine OFF time. ● Prohibits BI-LEVEL mode during AUTO operation.	● DEF or FOOT DEF mode is selected. ● MAX HOT temp. setting ● ECO switch OFF
Cooling Mode	● Limits power consumption by the electric inverter compressor based on the room temperature.	● MAX COLD temp. setting ● ECO switch OFF

Heating Mode

- The required engine coolant temperature when starting the engine when the vehicle is stopped differs from that when the vehicle is running. Therefore, the fuel economy has been improved by increasing the amount of engine-off time when the vehicle is stopped.
- When the ECO switch is turned ON during heating, the A/C ECU stops the PTC heater operation. Therefore, it takes a longer time to reach the set temperature than while the ECO switch is OFF.
- Engine coolant temperatures fluctuate greatly between when the vehicle is running and the vehicle is stopped. The blower level changes accordingly.
- The hysteresis, which is used while the ECO switch is ON, is provided to prevent the blower level from hunting due to fluctuations in the engine coolant temperature.

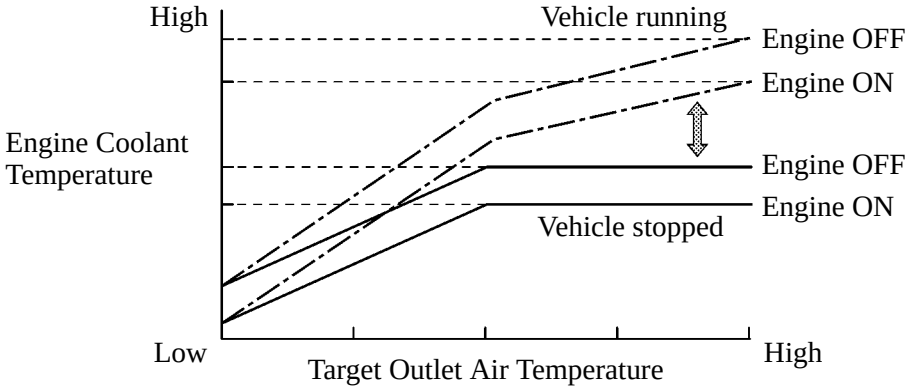

02HBE42Y

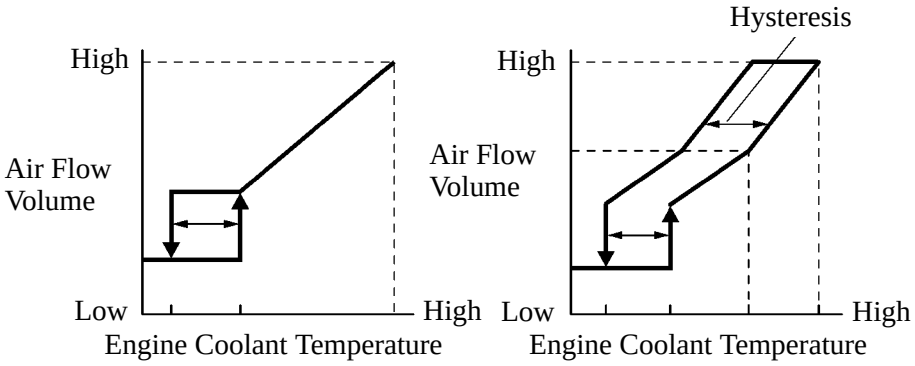

02HBE43Y

Downloaded from www.Manualslib.com manuals search engine

Cooling Mode

- When the ECO switch is turned ON during cooling, the A/C ECU limits the power consumption of the electric inverter compressor in accordance with the room temperature.
- The A/C ECU does not limit the power consumption very much (C_2 shown in the graph below), and prioritizes decreasing the room temperature when the room temperature is high (T_2 or above). When the room temperature decreases to T_1 or below, the A/C ECU limits the power consumption of the electric inverter compressor C_1 and restrains the cooling performance. This prevents the SOC (state of charge) of the HV battery from decreasing and increases the amount of engine OFF time, improving the fuel economy.

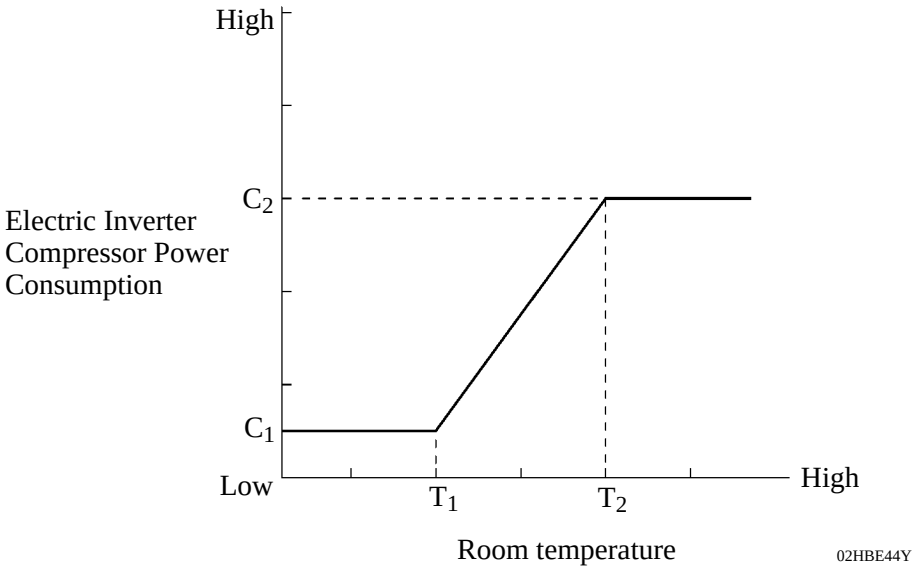

NOTE:
- ECO mode control is performed only when the blower motor is ON. When the ECO switch is turned ON while the blower motor is OFF, the ECO switch indicator light and the heater control panel LCD display illuminate, but ECO mode control is not performed.
- During cooling under ECO mode control, the room temperature is maintained at 25°C (77°F) even if the set temperature is below 25°C (77°F). Since the power consumption of the electric inverter compressor is limited under ECO mode control, this does not indicate a malfunction. To decrease the room temperature to below 25°C (77°F), the MAX COLD temperature [18°C (64.4°F)] must be selected or ECO mode control must be canceled by turning the ECO switch OFF.

Downloaded from www.Manualslib.com manuals search engine

5. Self-Diagnosis

- The A/C ECU has a self-diagnosis function. It stores any operation failures in the air conditioning system memory in the form of DTC (Diagnostic Trouble Code).
- There are two methods for reading DTC. One is to use a hand-held tester, and the other is to read DTC indicated on the heater control panel display.
- For details, see the 2007 Camry Hybrid Vehicle Repair Manual (Pub. No. RM02H0U).

Service Tip

The A/C ECU uses the CAN protocol for diagnostic communication. Therefore, a hand-held tester and a dedicated adapter [CAN VIM (Vehicle Interface Module)] are required for accessing diagnostic data. For details, see the 2007 Camry Hybrid Vehicle Repair Manual (Pub. No. RM02H0U).

Downloaded from www.Manualslib.com manuals search engine

NAVIGATION WITH AV SYSTEM

■DESCRIPTION

- The navigation with AV system is available as an option.
- The design of the screen has been improved in the navigation with AV system in order to improve its visibility. Furthermore, new functions have been added for improved convenience.
- The energy monitor and fuel consumption, which appears on the multi-information display on the combination meter, also appears on the radio and player with display.
- A hands-free function for a Bluetooth-compatible cellular phone is used. (see page Bluetooth Hands-Free System section on page BE-73.)
- The major specifications of the navigation with AV system are shown in the table below:

▶ Specifications ◀

Display	7.0-inches wide LCD	
	Pressure Sensitive Touch Panel	
	Manufactured by DENSO	
Navigation System	GPS	
Languages Supported	Voice Guidance	English, French and Spanish
Map Data Media	DVD	
Bluetooth Hands-Free System (see page BE-73)		
Navigation ECU	Manufactured by DENSO	
	Gyro Sensor	Piezoelectric Ceramic Piece

Bluetooth 001SI50Y

Bluetooth is a trademark owned by Bluetooth SIG, Inc.

Downloaded from www.Manualslib.com manuals search engine

▶ System Diagram ◀

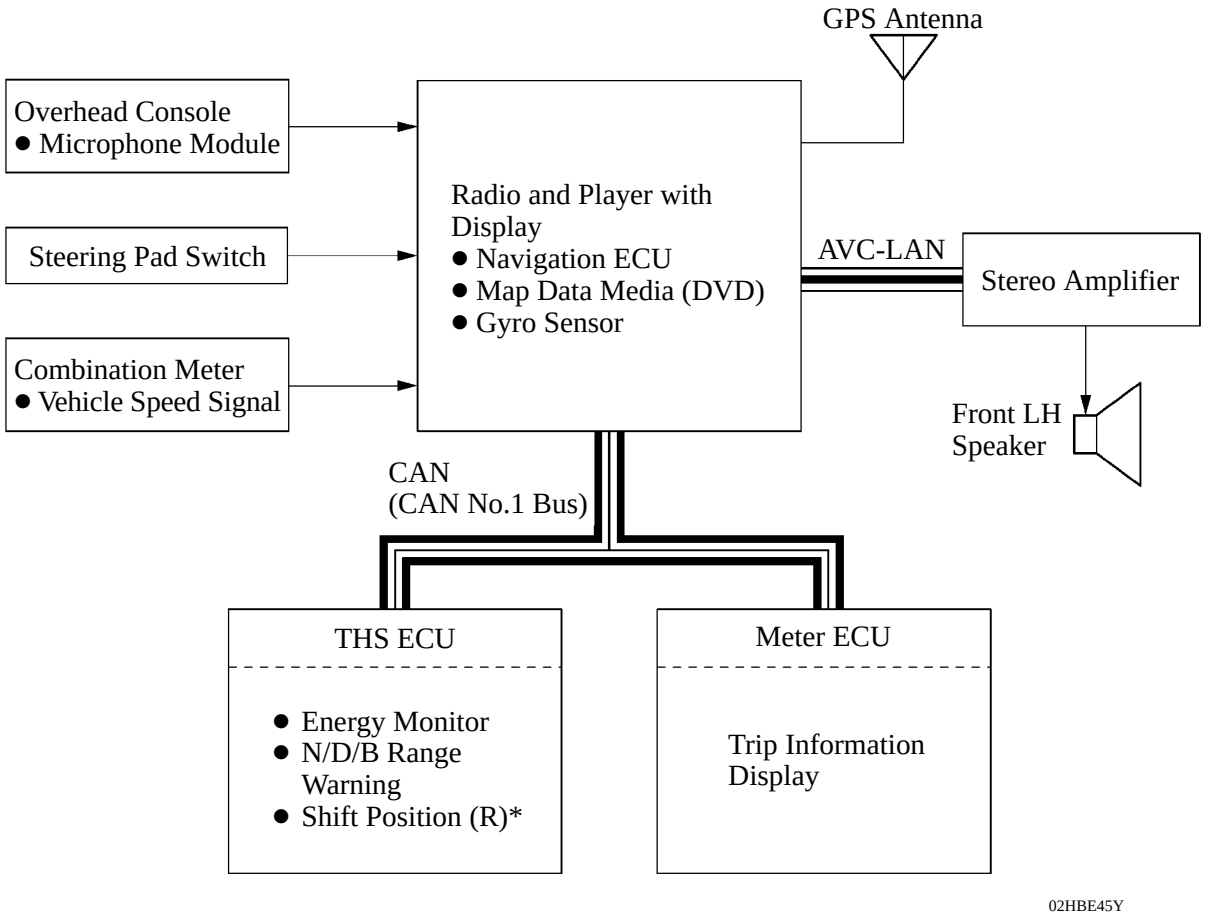

*: Rotates the wheels in reverse on the vehicle information display.

Downloaded from www.Manualslib.com manuals search engine

■LAYOUT OF MAIN COMPONENTS

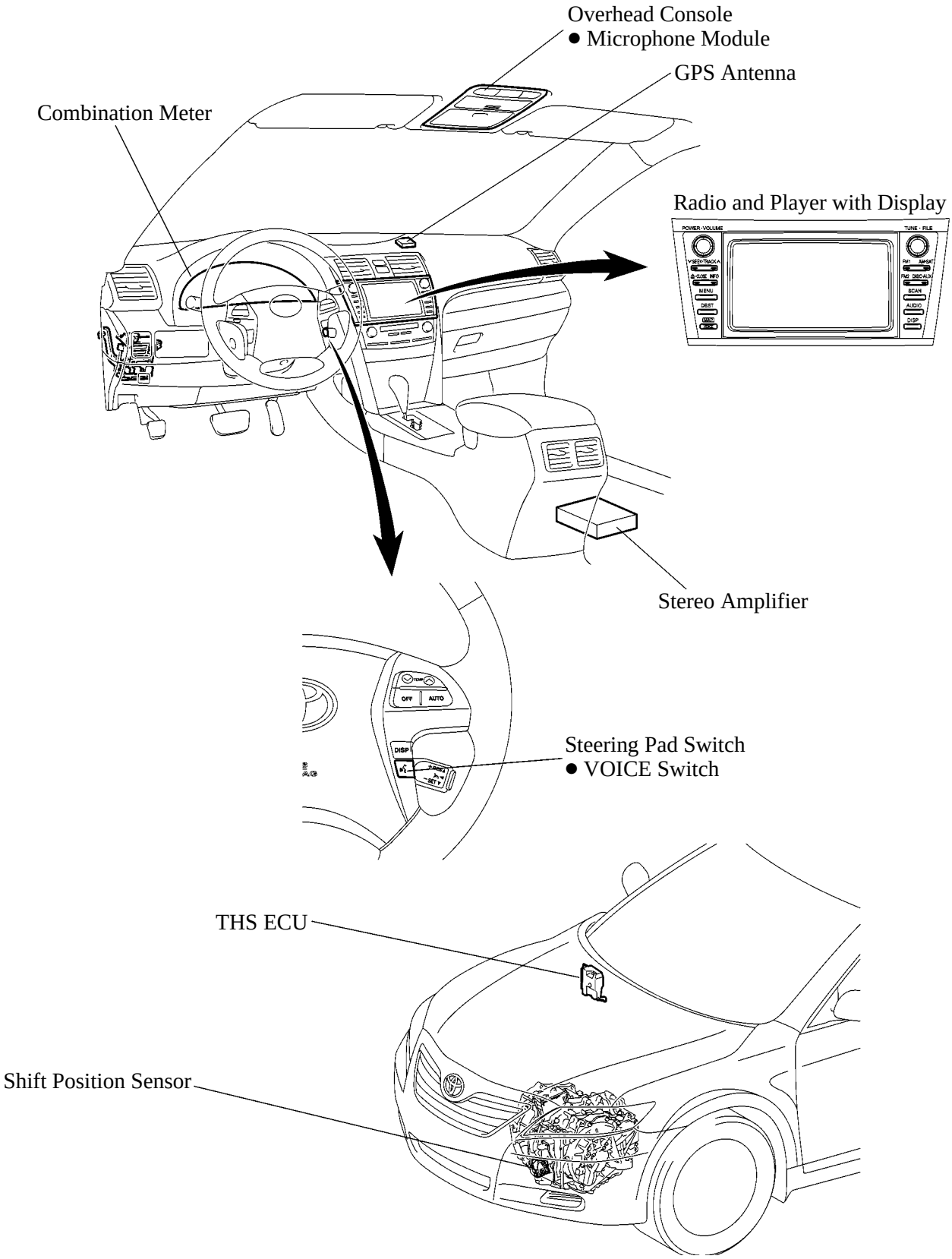

02HBE46TE

Downloaded from www.Manualslib.com manuals search engine

■CONSTRUCTION AND OPERATION

1. General

The main functions of the navigation system are listed below.

Function		Outline
Navigation Screen Display		● Enlargement/reduction, rotation and movement of map. ● Indication of current position and direction of travel. ● Correction of current position. ● Setting change and indication of route. ● Voice guidance. There are many additional functions.
Audio/Video System		Displays the following three operations: ● Radio Operation ● CD Changer Operation
Telephone Operation Screen Display		When a Bluetooth-compatible cellular telephone is registered on the radio and player with display, the driver can make and receive calls and talk hands-free on the cellular telephone by operating the switches on the screen or the steering pad.
Information Display	Energy Monitor Screen Display	The following information is displayed in accordance with the signals from the THS ECU (and meter ECU). ● Energy Transmission Direction ● HV Battery State of Charge Display
	Fuel Consumption Screen Display	The following information is displayed in accordance with the signals from the meter ECU (and THS ECU). ● Best Fuel Consumption ● Average fuel consumption per minute ● Average Fuel Consumption ● Possible cruising distance ● Recovered Energy
Maintenance Information		Can be used to inform the driver of inspection or replacement timing of the following items based on the calendar function and vehicle speed signal. **Engine Oil**: Replace engine oil **Oil Filter**: Replace engine oil filter **Rotation**: Rotate tires **Tires**: Replace tires **Battery**: Replace battery **Brake Pad**: Replace brake linings **Wipers**: Replace wiper blades **LLC**: Replace engine coolant **Brake Oil**: Replace brake fluid **ATF**: Replace ATF **Service**: Scheduled maintenance **Air Filter**: Replace air filter **Personal**: New information items can be created separately from provided ones
Calendar with Memo		It is possible to enter memos for particular dates on the calendar.
Speech Command System		Operates the navigation system using voice commands. However, only English can be recognized by this function.
Help Screen		Displays the command list and operation guide.
Screen Adjustment		The brightness and contrast of the screen can be adjusted to suit the surroundings.

(Continued)

Downloaded from www.Manualslib.com manuals search engine

Function	Outline
Screen Setting	The following screen settings are available: **Automatic transition:** It enables automatic return to the navigation screen from the audio screen. **Switch color:** Color of touch-screen button can selected.
Delete Personal Data	The following personal data can be deleted or returned to their default settings: ● Maintenance conditions ● Maintenance information “off” setting ● Memory points ● Areas to avoid ● Previous points ● Route trace ● User selection settings ● Phone book data ● Dialed numbers and received calls ● Speed dial ● Bluetooth phone data ● Security code
Beep Setting	Beep sounds off
Select Language	The language of the touch-screen buttons, pop-up messages and the voice guidance can be changed. English, French and Spanish are available.
Diagnosis Screen Display	● Service Check Menu ● Display Check ● Navigation Check ● Bluetooth TEL Check

Downloaded from www.Manualslib.com manuals search engine

2. Navigation Screen Display

- Based on the map data on the DVD, signals from the GPS satellites, signals from the built-in gyro sensor, and signals from the vehicle's speed sensor, the vehicle's present position, direction of travel, and driven distance are calculated and displayed on the navigation display.
- The functions of the navigation screen display are shown below:

Item		Function
Map Display	Linear Touch Scroll	Enables smooth scrolling by connecting the touch points on the screen
	On-route Scroll	Scrolls the center of the cursor forward and reverse constantly along the route.
	Heading Up	Displays the map so that the direction of the route progression head up during route guidance.
	Map Color Change	Depending on the position of the headlight switch, the screen changes to the day mode or night mode.
	Front Wide	Displays a map in the direction of travel of the vehicle in an enlarged form. (Heading up only)
	Step-less Scale Display	Changes the scale of the map from the basic 13 steps to an even finer display.
	Direct Scale Change	Directly selects and displays the map scale.
	Multi-step Scale Display	Changes and displays the map scale in 13 stages.
	Split-view Display	Displays different modes on a screen that is split into two views.
	Points-of-Interest Display	Displays selected types of marks on the map.
	Taillight-interlocked Map Color Change	Changes the displayed color on the map screen when the taillights are turned ON.
	Road Number Sign Board Display	Displays the road number on the map.
	Compass Mode Screen	Displays the direction of travel and detailed data of the present location.
	Map Coverage Info Screen	Displays the map area that is recorded on DVD.
	Street Name Indication on Scrolled Map	Displays the street name and the city name even when the map screen is being scrolled.
	Foot Print Map	Displays the city maps of Chicago, Detroit, Los Angeles, and New York.
	Building Tenant Information (for foot print map areas)	Displays information on the tenants in the building.
	Arrival Time	Displays the expected time of arrival at the destination.
	Route Trace	Displays the route on the map.
Destination Search	Last Destination Memory	Stores 20 locations of coordinates, names and times that have been set as destinations in the past.
	Hybrid Points-of-interest Search	Narrows the search by names of the points-of-interest, category, and areas.
	Points-of-interest Pinpoint Display	Pinpoints and displays the position of the point-of-interest.
	House Number Search	Searches for a house number.
	Special Memory Point	Sets a pre-registered point as a destination point while driving.
	Nearest Point-of-interest Search List Display	Searches nearest points-of-interest and displays a list.
	Intersection Search	By specifying two streets, the point at which they intersect is set as the destination point.
	Emergency Search	Performs a specific search for hospitals, police stations and dealers.
	Freeway Entrance/ Exit Search	Searches for the destination by the name of the street that connects to a Freeway entrance/exit.
	Coordinate search	User can input destination like a oasis in the desert etc.
	Telephone number search	Searches a facility by its telephone number.
	POI, brand icon indication	Displays icons for points of interest.
	Voice-recognition Address Search	The driver can set the destination by saying the city name or street name.

(Continued)

Downloaded from www.Manualslib.com manuals search engine

Item		Function
Route Search	Multiple Destination Setting	Sets multiple destinations. It can also rearrange the sequence of the destinations.
	Route Search	Searches for multiple routes.
	Search Condition Designation	Searches for the recommended, shortest, and other routes.
	Regulated Road Consideration	Performs search while considering regulated roads.
	Avoidance Area	Avoids a designated area and searches a route.
	Freeway mode screen	Displays information on facilities in the vicinity of the freeway exits and entrances.
	National Border Conscious Search	As for as possible, searches for a route that does not cross the border between the U.S.A. and Canada.
Guidance	Destination Direction Arrow Display	Uses arrows along the road to display the direction of the destination during route guidance.
	Off-Route Arrow Display	Uses arrows to display the direction of the destination during off-route.
	Rotary Guidance	Guidance that renders the entry and exit into a rotary as a single branching point.
	Right or Left Turn Guidance	Voice guidance to instruct the direction of travel to be taken.
	Freeway Direction of Travel Guidance	Voice guidance to instruct the direction of travel to take on the Freeway.
	Distance Display Destination	Displays the distance from the present location to the destination.
	Freeway Branch Type Specimen Guidance	Type specimen for guidance to a Freeway branch.
	Intersection Zoom-in Display	Zoom-in display when approaching an intersection.
	Turn List Display	Displays a turn list on the right side of the two-screen display.
	Calendar	Anniversary or appointment dates can be input and displayed.
	Function Help	Explains the functions of the switches on the main screens, such as the destination and menu.

Downloaded from www.Manualslib.com manuals search engine

3. Information Display

Energy Monitor Screen Display

The energy monitor screen is displayed as illustrated below. This screen has the display functions listed below.

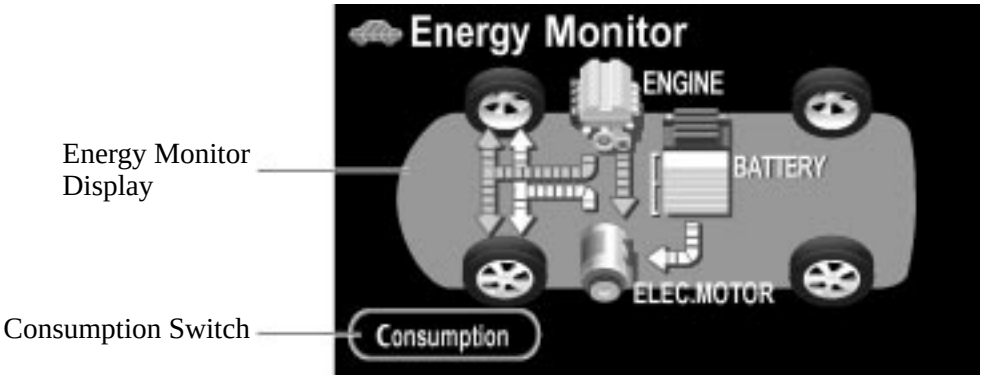

02HBE47Y

Item	Outline
Energy Monitor Display	● Energy monitor display indicates the energy transmission direction for checking the current drive method (engine, motor or both), the power generation status by the engine and status of regenerative energy use. ● The SOC (state of charge) of the battery can be checked on the meter with an 8-stage display, which is provided in the battery illustration. ● Displays the energy monitor status that has been calculated by the THS ECU.
Consumption Switch	While the screen shows the energy monitor display, it can be changed to the fuel consumption screen by pressing the Consumption switch on the screen.

Downloaded from www.Manualslib.com manuals search engine

Fuel Consumption Screen Display

The fuel consumption screen is displayed as illustrated below. This screen has the display functions listed below.

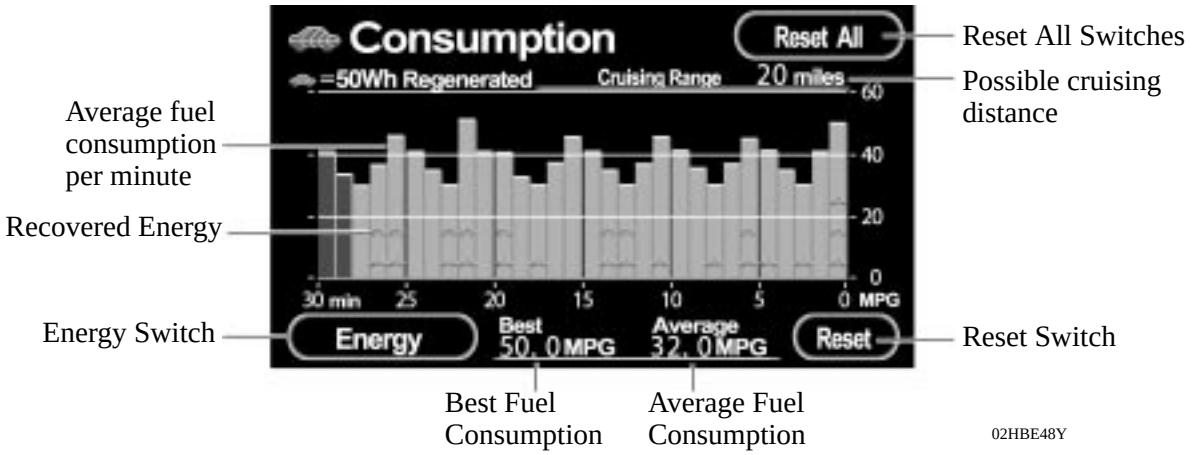

Item	Outline
Reset Switch	Resets the average fuel consumption, the average fuel consumption per minute and the recovered energy.
Reset All Switch	Resets the average fuel consumption, the average fuel consumption per minute, the recovered energy and the best fuel consumption.
Energy Switch	While the screen shows the fuel consumption display, it can be changed to the energy monitor screen by pressing the Energy switch on the screen.
Average Fuel Consumption	● Displays the value that has been calculated by the meter ECU, which is based on the driven distance and the fuel consumption volume (fuel injection signal from No.1 injector), provided that the power switch is turned ON. ● Displays the average fuel consumption since the Reset switch was last pressed. ● The display updates every 10 seconds.
Best Fuel Consumption	● Calculated by the meter ECU, based on the driven distance and the fuel consumption volume (fuel injection signals from the No.1 injector). ● Provided that the power switch is ON, the radio and player with display stores the calculated average fuel consumption and, when the reset button is pressed, displays the best value.
Average fuel consumption per minute	● Displays the value that has been calculated by the meter ECU, which is based on the driven distance and the fuel consumption volume (fuel injection signal from No.1 injector), provided that the power switch is turned ON. ● The display is updated every 60 seconds.
Possible cruising distance	● Displays the value that has been calculated by the meter ECU, which is based on the driven distance, the fuel consumption volume (fuel injection signal from No.1 injector) and fuel sender gauge level, provided that the power switch is turned ON. ● The display is updated every 10 seconds.
Recovered Energy	● The recovered energy for 5 minutes is indicated with symbols. ● The recovered energy status is calculated by the THS ECU.

Downloaded from www.Manualslib.com manuals search engine

4. Warning Screen Display

N, D and B Range Warning

When the condition indicated below has been met, the master warning light blinks on the combination meter, a message appears in the multi-information display, and a warning message appears on the display.

- The READY light is illuminated, the shift position is in the N position, and the HV battery is discharged.

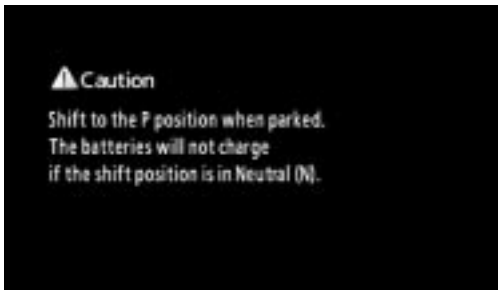

02HBE49Y

Shift Position Warning

When the condition indicated below has been met, the master warning light blinks on the combination meter, a message appears in the multi-information display, and a warning message appears on the display.

- While the THS II is OFF and the shift position is in a position other than P, the driver's door opened.

02HBE77Y

5. Diagnosis Screen Display

The navigation system is equipped with a self-diagnosis function and can display the diagnosis menus shown on the right.
The diagnosis menu contains the following four items

a) Service Check Menu

b) Display Check

c) Navigation Check

d) Bluetooth TEL Check

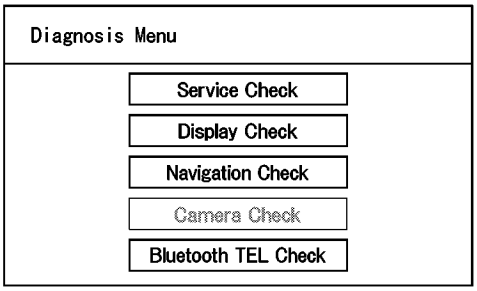

025BE72TE

For details on the procedure required to enter the diagnosis menu screen, see the 2007 Camry Hybrid Vehicle Repair Manual (Pub No. RM02H0U).

Downloaded from www.Manualslib.com manuals search engine

BLUETOOTH HANDS-FREE SYSTEM

■DESCRIPTION

- Bluetooth is a short-distance, high-speed wireless data communication system that uses the 2.4 GHz frequency band prescribed by the Bluetooth SIG (Special Interest Group).
- This system enables drivers to place or receive phone calls using a cellular phone without releasing their hands from the steering wheel.
- The Bluetooth hands-free system is installed on both the ’07 Camry Hybrid model with the navigation with AV system and the ’07 Camry Hybrid model without the navigation with AV system as optional equipment.
- The Bluetooth hands-free system of the ’07 Camry Hybrid model with the navigation with AV system can be operated by touching icons indicated on the radio and player with display.
- The Bluetooth hands-free system of the ’07 Camry Hybrid model without the navigation with AV system can be operated by turning or pressing the control knob of the audio head unit.
- The major difference between the model with the navigation with AV system and the model without navigation with AV system is described in the following table:

▶ Major Difference ◀

Function		With Navigation with AV System (Maximum number of data entry)	Without Navigation with AV System (Maximum number of data entry)
Call with Bluetooth phone	By dial	○	—
	By dialed numbers	○ (5)	○ (5)
	By received calls	○ (5)	○ (5)
	By phone book	○ (1,000)	○ (20)
	By voice recognition	○	○
	By speed dial	○	○
	By POI (Point of Interest) call	○	—
Registering phonebook		○ (1,000)	○ (20)
Registering voice recognition		○ (20)	○ (20)
Registering speed dial		○ (17)	○ (6)
Registering speed tone		○ (6)	—
Registering group		○ (20)	—
Automatic volume setting		○	○

Downloaded from www.Manualslib.com manuals search engine

▶ System Diagram ◀

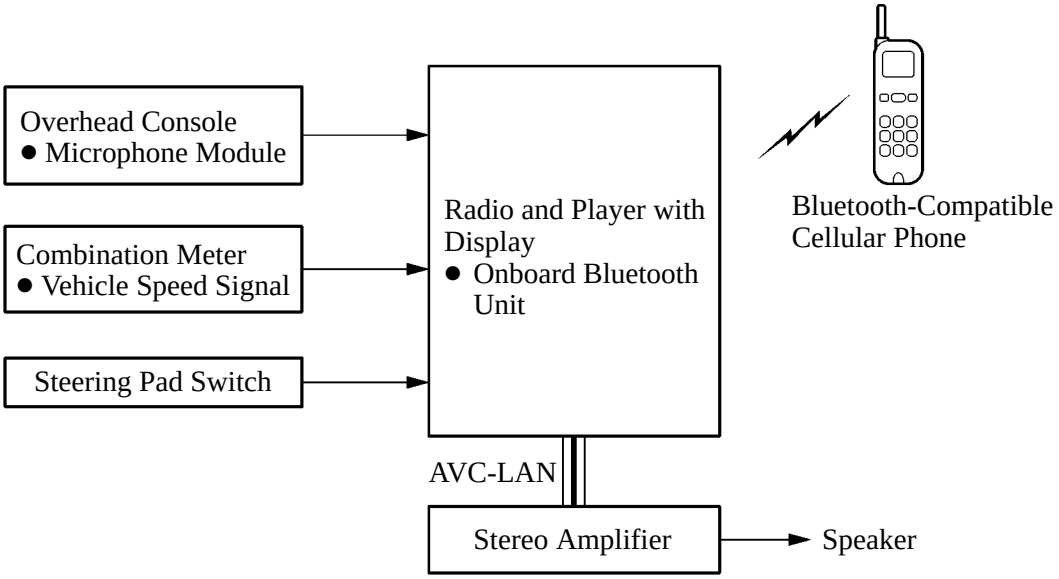

Models with Navigation with AV System

02HBE50TE

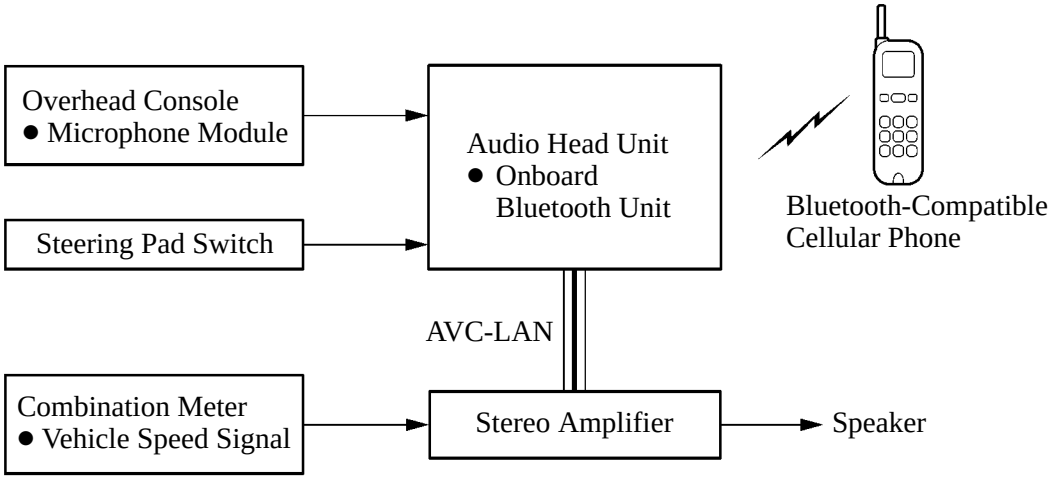

Models Without Navigation with AV System

02HBE50TE

Downloaded from www.Manualslib.com manuals search engine

■LAYOUT OF MAIN COMPONENTS

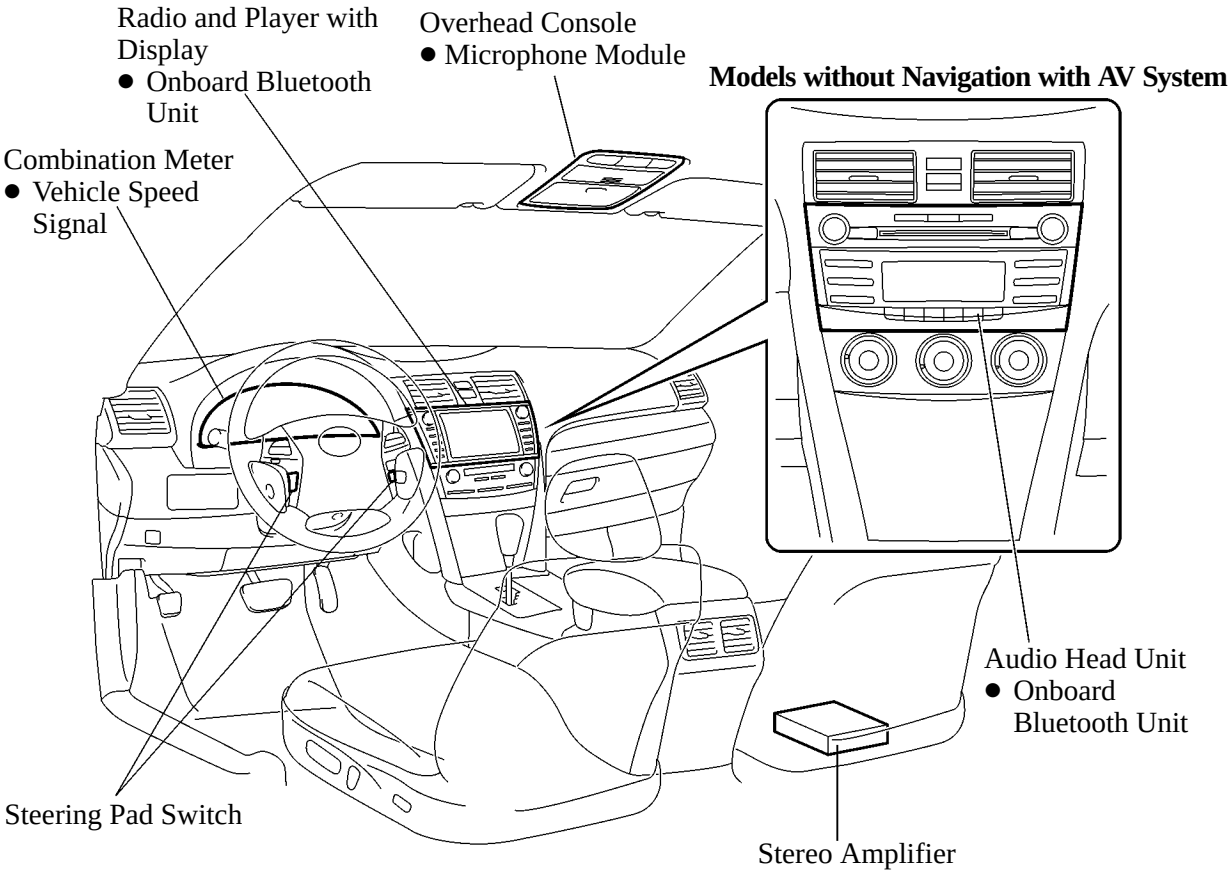

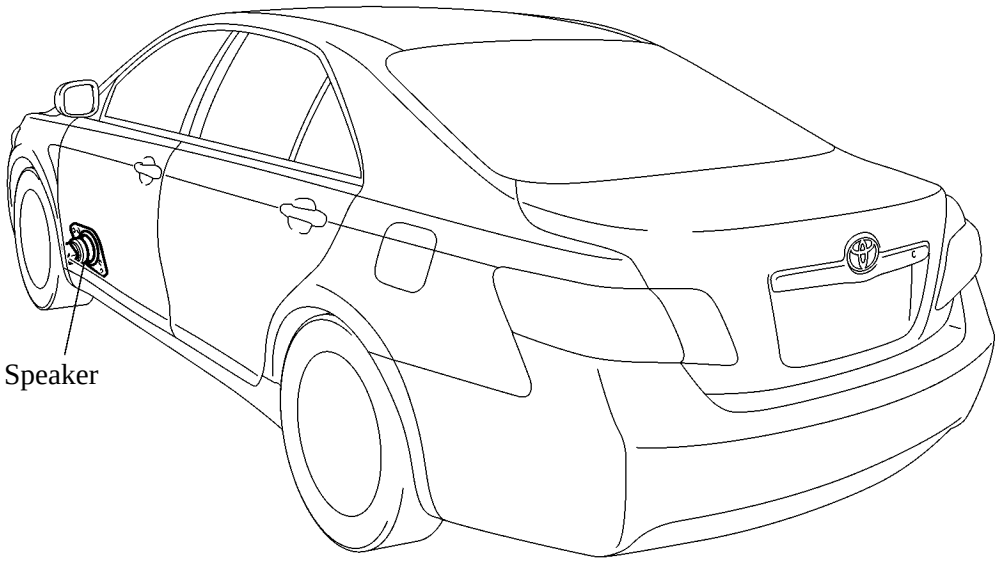

025BE74TE

Downloaded from www.Manualslib.com manuals search engine

■HANDS-FREE FUNCTIONS (Models with Navigation with AV System)

The Bluetooth hands-free system installed on the models with navigation with AV system has the following functions. However, for safety, some functions may not be selectable when the vehicle is being driven.

Function		Outline
Call with Bluetooth phone	By dial	The user can call by inputting a telephone number.
	By phonebook	The user can call by using the phonebook data that have been transferred from the user's cellular phone. The user can register up to 1000 numbers in the phonebook.
	By dialed numbers	The user can call by selecting a previously dialed number. The system remembers up to five dialed numbers. If more than five numbers have been dialed, the oldest number will no longer be remembered.
	By received calls	The user can call by selecting the telephone number of a received call. When a call is received, the system will remember the last five numbers. If more than five calls have been received, the oldest number will no longer be remembered.
	By speed dial*	The user can call by using registered telephone numbers that the user selected from the phonebook, dialed numbers or received calls.
	By voice recognition (Dialing by name)	The user can call by giving a name registered in the phonebook.
	By voice recognition (Dialing by phone number)	The user can call by giving a desired number.
	By POI (Point of Interest) call	The user can call by operating a switch when "Call" is displayed on the screen from navigation system.
Receive with Bluetooth phone		When a call is received, the receive screen is displayed with a sound.
Talk on the Bluetooth phone		While user is talking on the phone, the talking screen is displayed.
Change the settings of the Bluetooth phone	Registering the speed dial	The user can register the desired telephone number from the phonebook, dialed numbers or received calls. Up to 17 speed dial numbers can be registered.
	Setting the volume	The user can set the volume.
		Automatic volume settings for high speed: When the vehicle speed is over 80 km/h (50 mph), the volume automatically increases by 3 dB from the volume set by the user. When the vehicle speed decreases to 70 km/h (44 mph) or lower, the volume returns to the previous volume setting.
		Initializing the settings: The user can initialize the settings.
	Setting the screen	Receiving call display: The user can select the method of the receiving call display.
		Auto answer: When a call is received, the display automatically changes to the talking screen and user can start to talk on the phone (without touching any switch) after a preset time.
		The Bluetooth connection status at startup: When the user turns the power source to ACC or IG-ON and the Bluetooth is automatically connected, the connection check is displayed.
		Initializing the settings: The user can initialize the settings.

*: The user can operate it while driving.

(Continued)

Downloaded from www.Manualslib.com manuals search engine

Function		Outline
Change the setting of the Bluetooth phone	Setting the phonebook	Registering phone number: The user can register phone numbers in the phonebook.
		Transferring a telephone number: The user can transfer the telephone numbers from the user's Bluetooth phone to the system. Up to 1,000 data (up to 2 numbers per entry) can be registered in the phonebook.
		Registering the phonebook data: The user can register the phonebook data.
		Editing the name: If no name has been inputted, the number is displayed.
		Editing the phone number: The user can register a phone number in "TEL1" and "TEL2" separately. Up to 2 numbers per phonebook entry can be registered.
		Selecting the group: The user can set a group for a contact. It will then be easier for the user to find this contact when needed, by using the grouping display.
		Setting the voice recognition: The user can set the voice recognition. Up to 20 numbers can be registered to allow voice recognition.
		Adding data to the phonebook: The user can add data to the phonebook.
		Editing the data: The user can edit the registered data.
		Deleting the data: The user can delete the data.
		Deleting all the phone data: The user can delete all the phone data.
		Registering a group name: The user can register 20 groups
		Selecting a group icon: The user can select the desired icon.
		Editing a group name: The user can input the name with the software keyboard.
		Deleting a group name: The user can delete the group names individually or all at once.
		Deleting the log data: The user can delete the log data individually or all at once.
Change the settings of the Bluetooth phone	Setting the security	By setting the security, the user can prevent people from using some functions of the hands-free system. It is useful when the user leave their car with a hotel or valet parking or the user doesn't want others to see the data that the user has registered.
		Changing the security code: The security code is 4 digits and the default is "0000". Choose a new code that is hard for other people to guess.
		Phone book lock: The user sets the phonebook lock.
		Initializing the security code: The user can initialize the settings.

(Continued)

Downloaded from www.Manualslib.com manuals search engine

Function		Outline
Set a Bluetooth phone	Enter the Bluetooth phone	In order to use hands-free function of a Bluetooth phone, it is necessary to register it in the audio head unit. Once a phone is registered, the hands-free function becomes available automatically. The user can register up to 6 Bluetooth phones.
	Select the Bluetooth phone	When two or more registered Bluetooth phones are in the cabin, it is necessary to select which phone to use to prevent the lines from being crossed. Only the selected phone is available for use as a hands-free phone. The phone registered last is automatically selected.
	Indicate and change Bluetooth information	The user can set, change and initialize the information of the Bluetooth phone displayed on the screen.
	Deleting a Bluetooth phone	A registered Bluetooth phone can be unregistered from the multi display.
	Displaying the information of the Bluetooth phone user delete	The user can display the information of the Bluetooth phone before he/she deletes it and he/she can ensure that the telephone that he/she will delete is correct one.

Downloaded from www.Manualslib.com manuals search engine

■HANDS-FREE FUNCTIONS (Models without Navigation with AV System)

The Bluetooth hands-free system installed on the models without navigation with AV system has the following functions. However, for safety, some functions may not be selectable when the vehicle is being driven.

Function		Outline
Call with Bluetooth phone	By phonebook	The user can call by using the phonebook data that have been transferred from the user's cellular phone.
	By dialed numbers	The user can call by selecting a previously dialed number (voice recognition is also available). The system remembers up to 5 dialed numbers. If more than 5 numbers have been dialed, the oldest number will no longer be remembered.
	By received calls	The user can call by selecting the telephone number of a received call (voice recognition is also available). When a call is received, the system will remember the last five numbers. If more than five calls have been received, the oldest number will no longer be remembered.
	By speed dial*	The user can call using the registered phone number by pressing the function buttons (1 to 6) of the audio head unit.
	By voice recognition (Dialing by name)	The user can call by giving a name registered in the phonebook.
	By voice recognition (Dialing by phone number)	The user can call by giving a desired number.
Receive with Bluetooth phone		When a call is received, the phone number or registered caller name is displayed on the audio head unit LCD with an audio signal.
Talk on the Bluetooth phone		While the user is talking on the phone, the phone number or registered caller name is displayed on the audio head unit LCD.
Change the settings of the Bluetooth phone	Setting the phonebook	Transferring a telephone number: The user can transfer the telephone numbers from the user's Bluetooth phone to the system.
		Registering phone number: The user can register phone numbers using the following methods - Voice recognition - Using dialed numbers and received calls - Inputting phone numbers using the control knob of the audio head unit Up to 20 data can be registered in the phonebook.
		Add entry: The user can register voice recognition data for a maximum 20 registered phone numbers. The user can initialize the settings.
		Change Name: The user can change the registered voice recognition data.
		Delete entry: The user can delete the registered their voice recognition data.
		Delete speed dial: The user can delete the speed dials registered to the function buttons (1 to 6) of the audio head unit.
		List Names: The user can change or delete the voice recognition data, or can call using certain voice recognition data by selecting that data while the system is reading it out.

*: The user can operate it while driving.

(Continued)

Downloaded from www.Manualslib.com manuals search engine

Function		Outline
Change the settings of the Bluetooth phone	Registering the speed dial	The user can register a maximum of 6 speed dials to the function buttons (1 to 6) of the audio head unit by selecting the desired phone numbers from the voice recognition registration. The user can initialize the settings.
	Setting the volume	The user can set the volume.
		Automatic volume settings for high speed: When the vehicle speed is over 80 km/h (50 mph), the volume automatically increases by 3 dB from the volume set by the user. When the vehicle speed decreases to 70 km/h (44 mph) or lower, the volume returns to the previous volume setting. The user can initialize the settings.
	Setting the security	By setting the security, the user can prevent people from using some functions of the Hands-free system. It is useful when the user leaves their car with a hotel or valet parking or the user doesn't want others to see the data that the user has registered.
		Changing the security code: The security code is 4 digits. Choose a new code that is hard for other people to guess.
		Phone book lock: The user sets the phonebook lock.
		Initializing the security code: The user can initialize the settings.
Set a Bluetooth phone	Enter the Bluetooth phone	In order to use hands-free function of a Bluetooth phone, it is necessary to register it in the audio head unit. Once a phone is registered, the hands-free function becomes available automatically. The user can register up to 6 Bluetooth phones from a maximum of 6 numbers.
	Select the Bluetooth phone	When two or more registered Bluetooth phones are in the cabin, it is necessary to select which phone to use to prevent the lines from being crossed. Only selected phone is available for use as a hands-free phone. The phone registered last is automatically selected.
	Indicate Bluetooth information	The user can check the information of the Bluetooth phone on the audio head unit LCD.
	Change the passkey	The user can change the pass key on the audio head unit LCD.
	Deleting a Bluetooth phone	The user can delete the registered Bluetooth phone.

Downloaded from www.Manualslib.com manuals search engine

POWER WINDOW SYSTEM

■DESCRIPTION

The power window system has the following functions:

Function	Outline
Manual up-and-down (All Doors)	This function causes the driver door window to open or close while the power window switch is being pulled up or pushed halfway down. Windows other than the driver door window can be opened or closed by fully pulling up or halfway pushing down the switch. The window stops as soon as the switch is released.
One-touch auto down (Driver Door)	The one-touch auto down function enables the window to be fully opened with a single touch of the power window switch.
Remote Control (All Doors)	The power window master switch can control the up-and-down operations of the windows.
Window Lock	Power window operation of the 3 passenger windows is disabled when the window lock switch is pressed.
Key Off Operation (Driver Door)	This function makes it possible to operate the power windows for approximately 43 seconds after the power source is turned to OFF, if the driver door or the front passenger door is not opened.

▶ System Diagram ◀

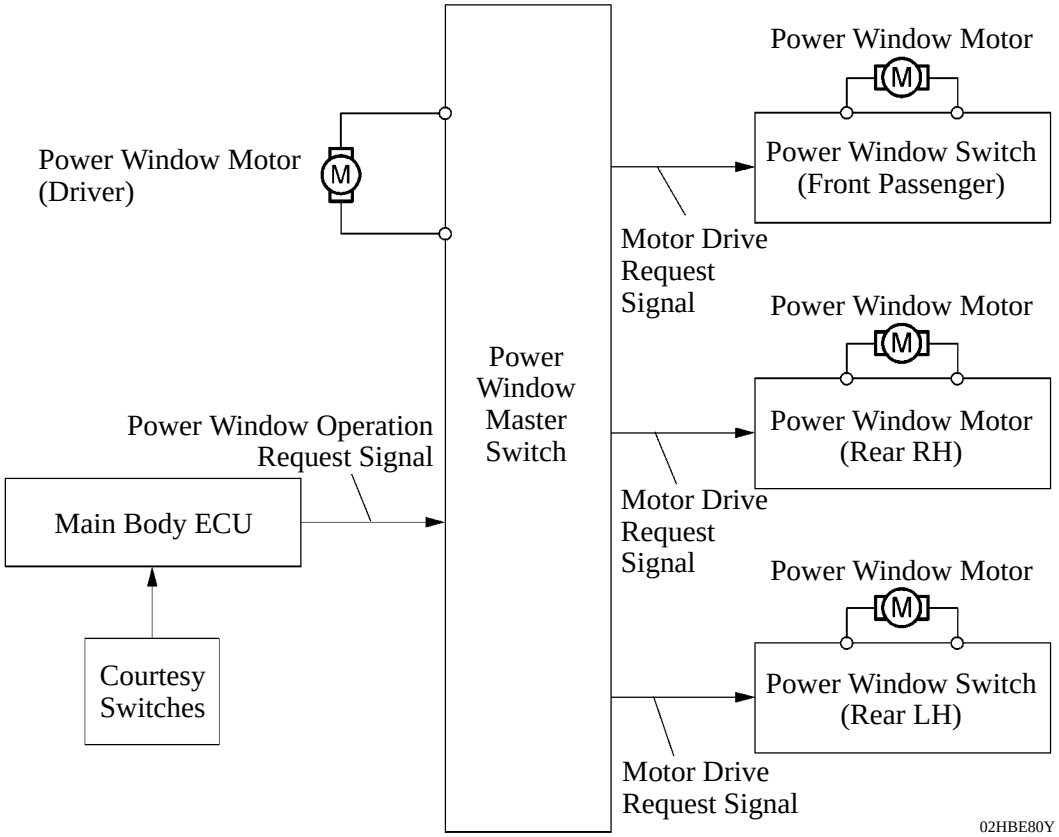

Downloaded from www.Manualslib.com manuals search engine

■LAYOUT OF MAIN COMPONENTS

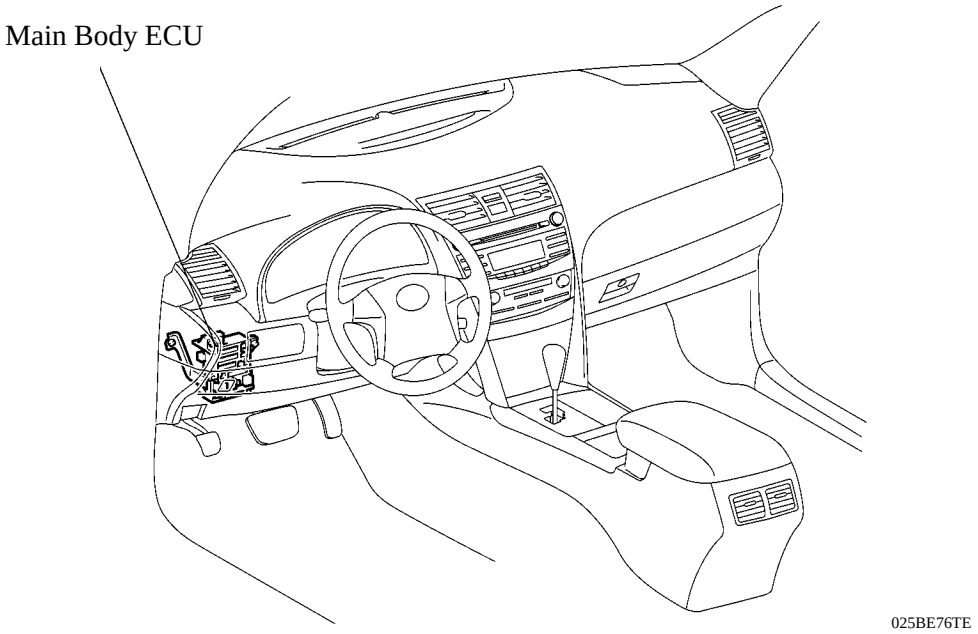

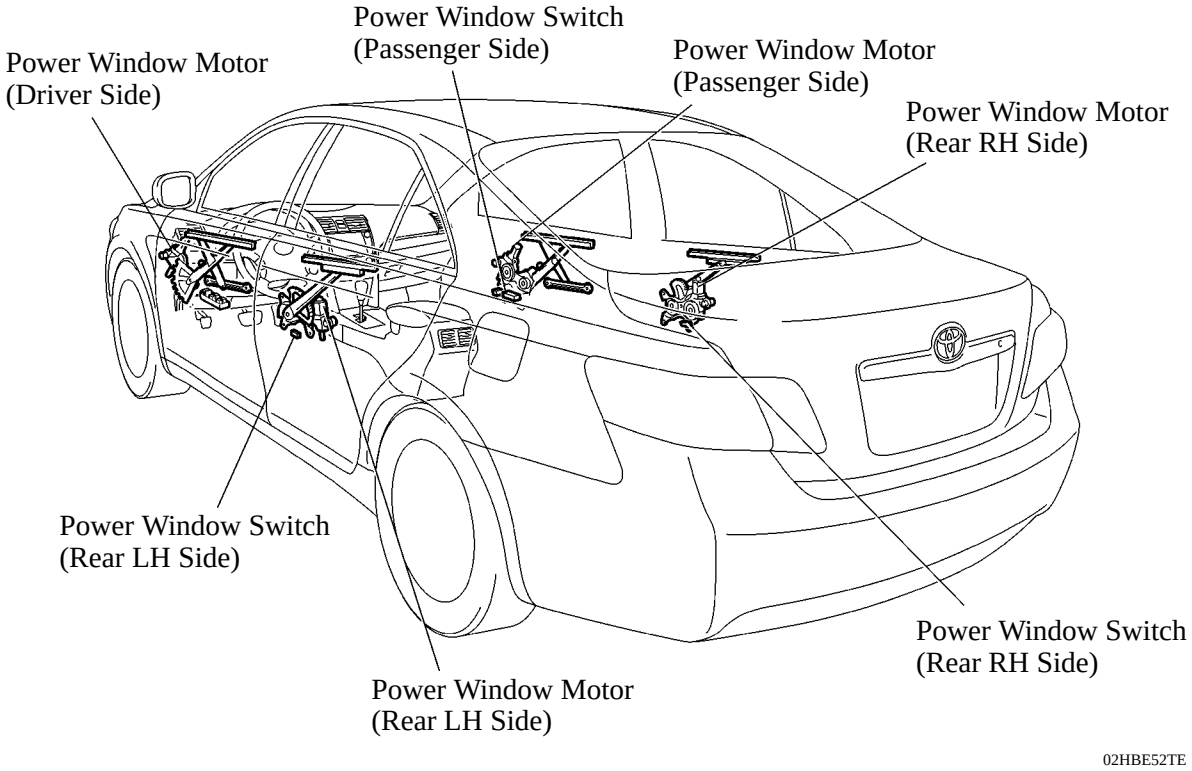

Downloaded from www.Manualslib.com manuals search engine

DOOR LOCK CONTROL SYSTEM

■DESCRIPTION

The door lock control system has the following functions:

Function	Outline
Manual unlock prohibition function	Performing the door lock operation with a transmitter (wireless remote) or a key will prohibit the unlock operation by the door lock control switch (door mounted interior lock switch).
One-motion open	When the door is locked, this function enables the door to be unlocked by merely pulling the inside handle lever of the door.
Key-linked lock and unlock function	This function, which is linked with the door key cylinder, can lock or unlock all the doors when a lock or unlock operation is effected using the mechanical key.
Key confine prevention function	When the key is in the interior detection area, if all doors are locked by the door lock operation, all the doors will be unlocked.
2-step unlock function*	This function is provided to unlock the driver's door when the key is turned in the door lock cylinder the first time, and to unlock the remaining doors when it is turned the second time.
Shift-linked automatic door lock*	When the conditions listed below are met, this function causes all the doors to be automatically locked. ● The power source is READY. ● All the doors are closed. ● The shift lever is moved to any position other than P.
Speed-sensitive automatic door lock*	When the conditions listed below are met, this function causes all the doors to be automatically locked. ● Vehicle speed is higher than approximately 20 km/h (13 mph). ● The power source is READY. ● Any one of the doors in an unlocked state.
Shift-linked automatic door unlock*	When the power source is IG-ON, the shift lever is moved to P position from any position other than P, and the vehicle speed is 16 km/h (10 mph) or less, all of the doors will be automatically unlocked.
Opening driver's door-linked automatic door unlock*	All doors are unlocked automatically when the driver's door is opened within 10 seconds after the power source is changed from IG-ON to the ACC or OFF.

*: The setting function can be changed using the customized body electronics system. For details, refer to Customized Body Electronics System section on page BE-11.

Downloaded from www.Manualslib.com manuals search engine

▶ System Diagram ◀

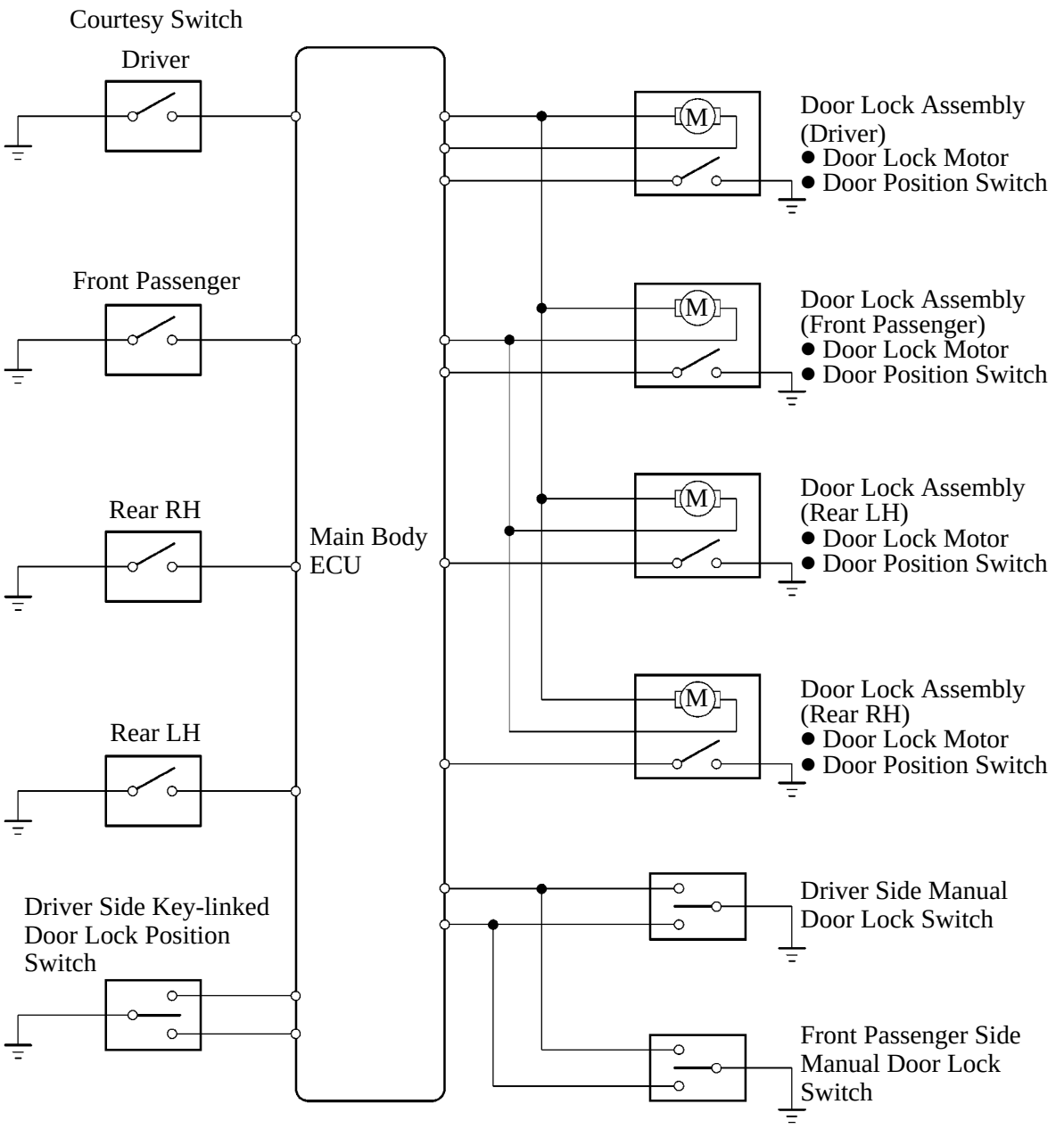

Downloaded from www.Manualslib.com manuals search engine

■LAYOUT OF MAIN COMPONENTS

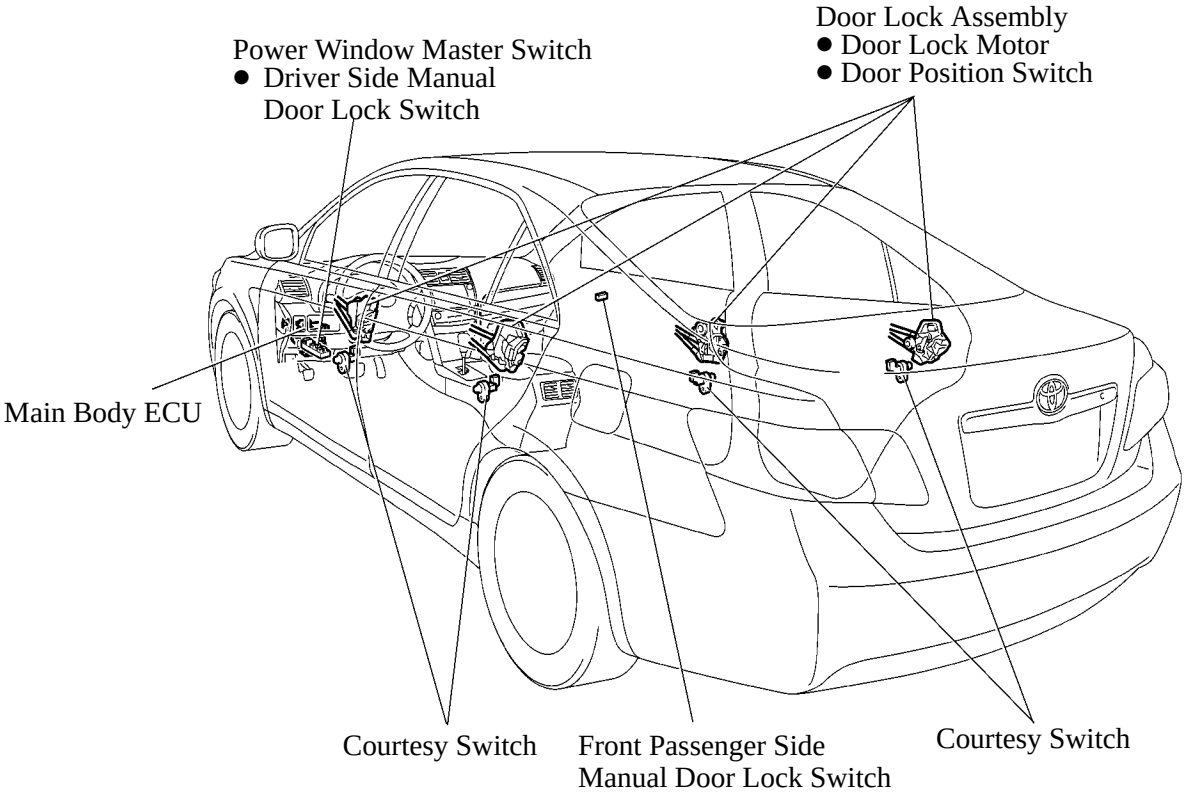

02HBE54TE

Downloaded from www.Manualslib.com manuals search engine

SMART KEY SYSTEM

■DESCRIPTION

- This system is standard equipment.
- The smart key system not only has a wireless door lock remote control function and engine immobilizer function, but by carrying the key the following functions (entry function and push button start function) are also possible without having to use a key or transmitter button. It is an extremely convenient system.
  - The THS II can be started by simply pressing the power switch while depressing the brake pedal (Push Button Start Function)
  - Door unlock/lock (Entry Unlock/Entry Lock Functions)
  - The trunk can be opened (Trunk Open Function)
  - Wireless door lock control function.

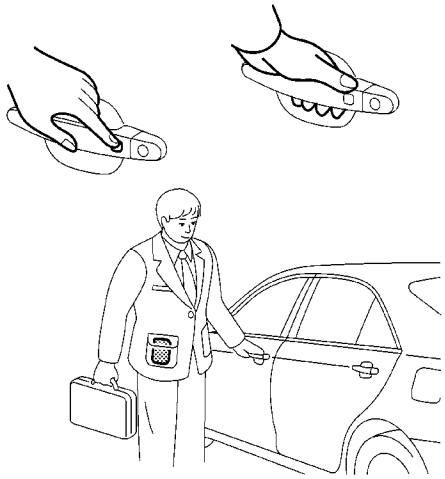

Entry Unlock / Lock Functions

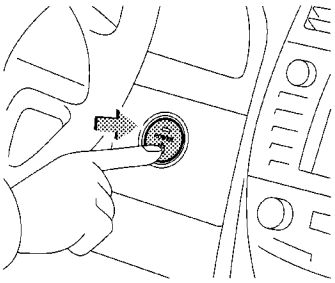

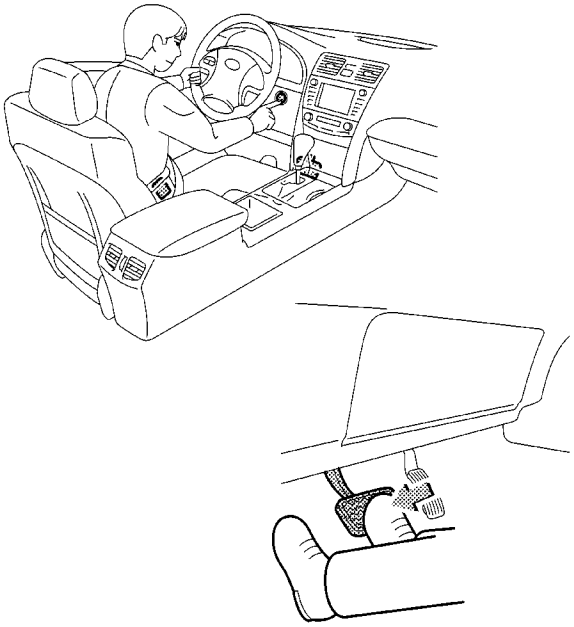

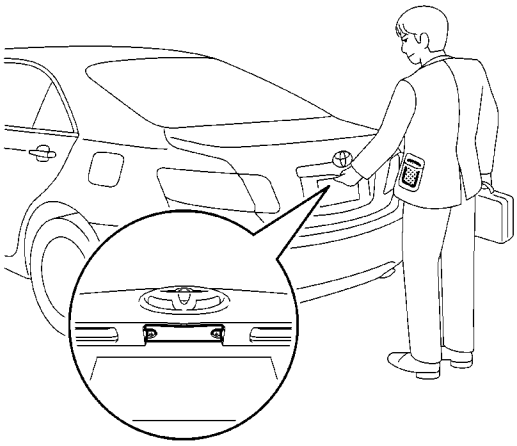

Trunk Open Function

Start Function

02HBE55TE

Downloaded from www.Manualslib.com manuals search engine

■ ACTUATION AREA

The special functions of the key system only work when the key is in the actuation area formed by the eight oscillators.

- The front and rear room oscillators form the actuation area of the push button start function.
- Front door oscillators and inner and outer trunk oscillators form the actuation area of the entry function.

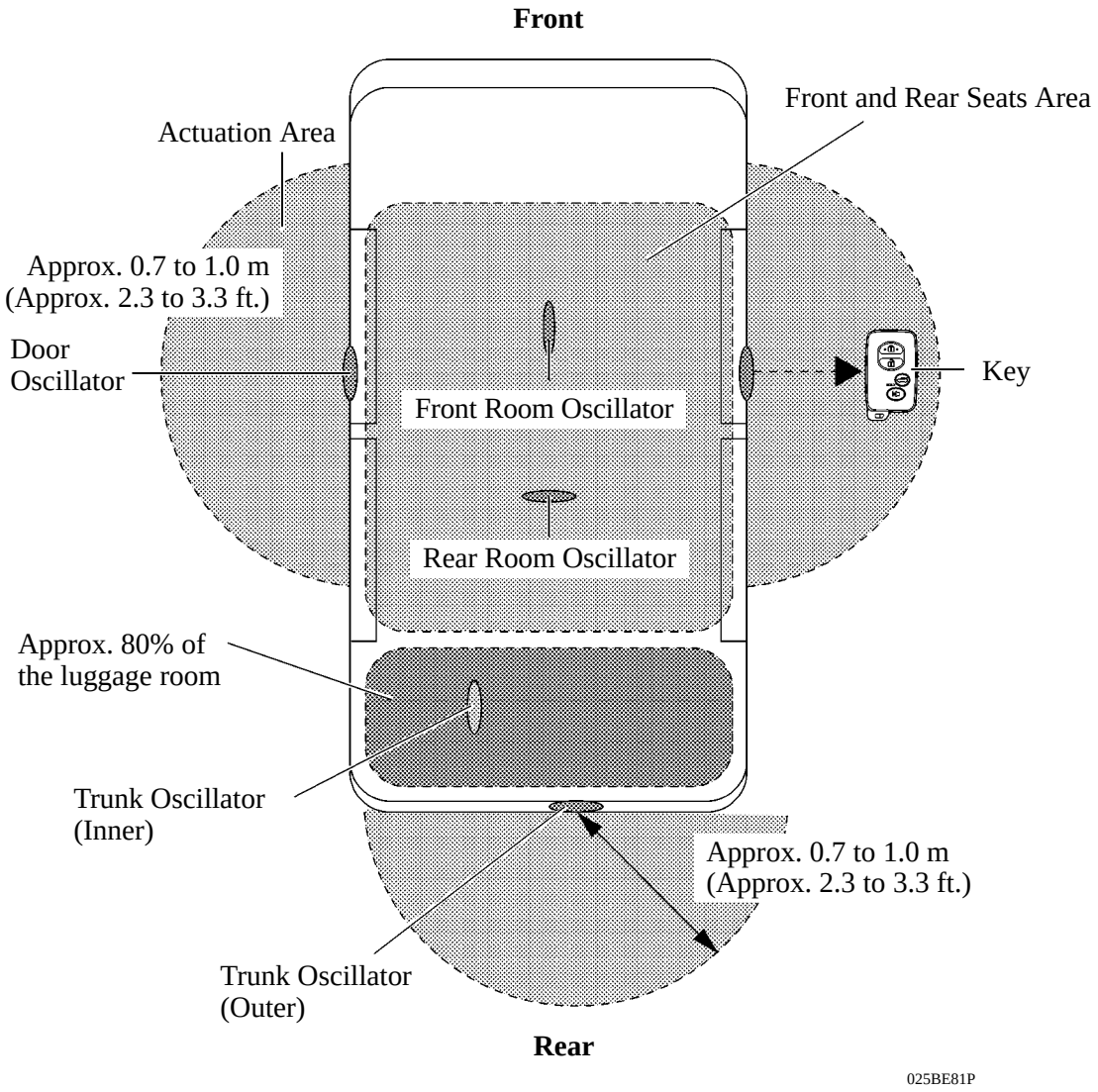

Downloaded from www.Manualslib.com manuals search engine

■START FUNCTION

1. General

- While the ignition key must be inserted into the ignition key cylinder and turned from OFF to the START position in order to start the THS II on models without the smart key system, models on which the smart key system is installed start the THS II when the push-type power switch is pressed while the brake pedal is depressed and a key is carried by the driver.
- This function has different power source control patterns to suit the state of the brake pedal and shift lever position. For details, see page BE-94.

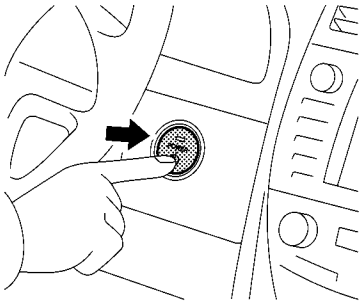

With Smart Key System
(’07 Camry Hybrid model)

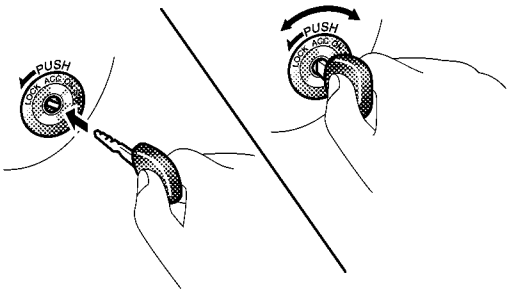

Without Smart Key System
(Conventional models)

02HBE56TE

Downloaded from www.Manualslib.com manuals search engine

2. System Diagram

The main body ECU controls the push button start function. The system diagram below shows the components that relate to this function.

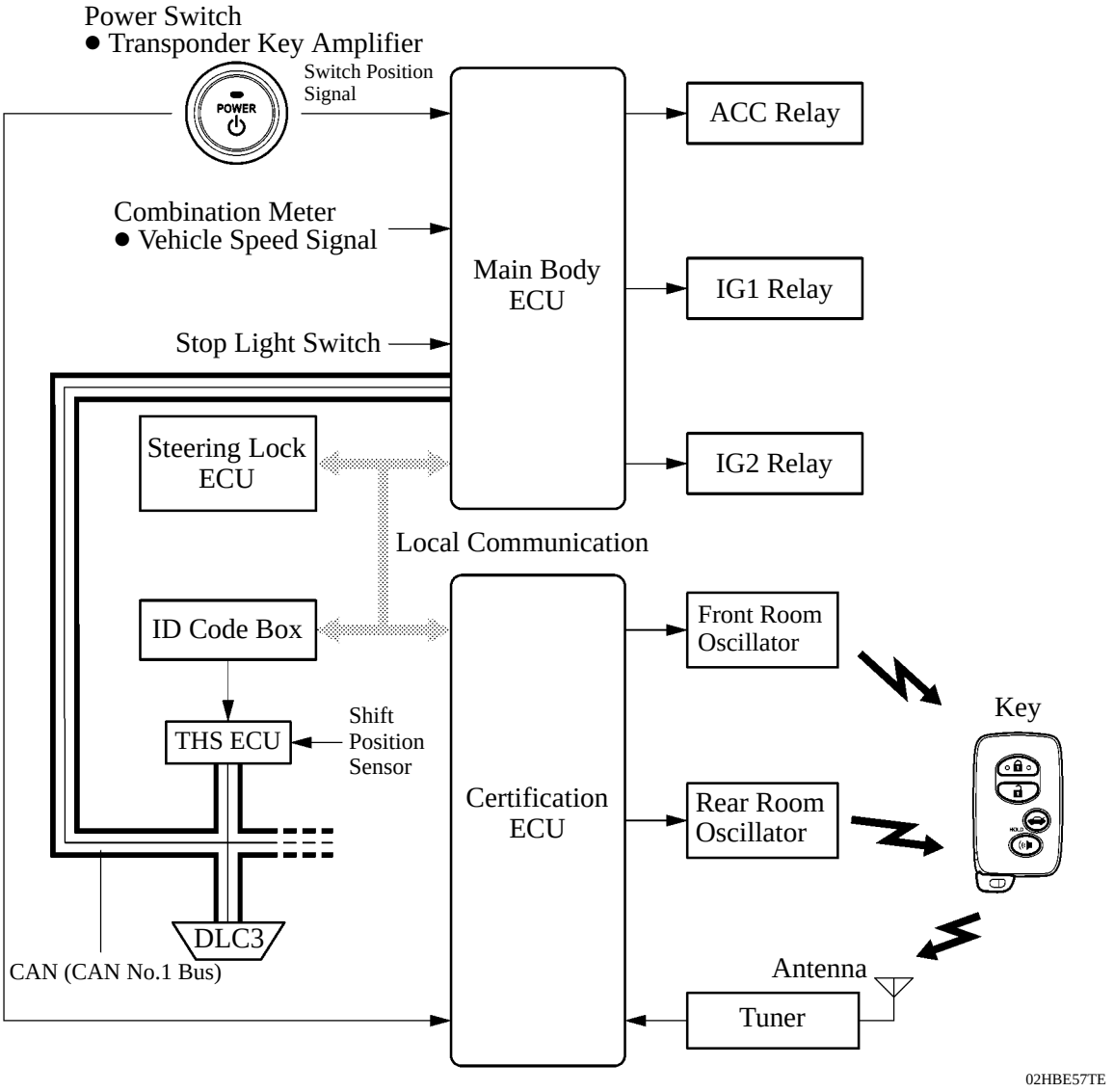

Downloaded from www.Manualslib.com manuals search engine

3. Layout of Main Components

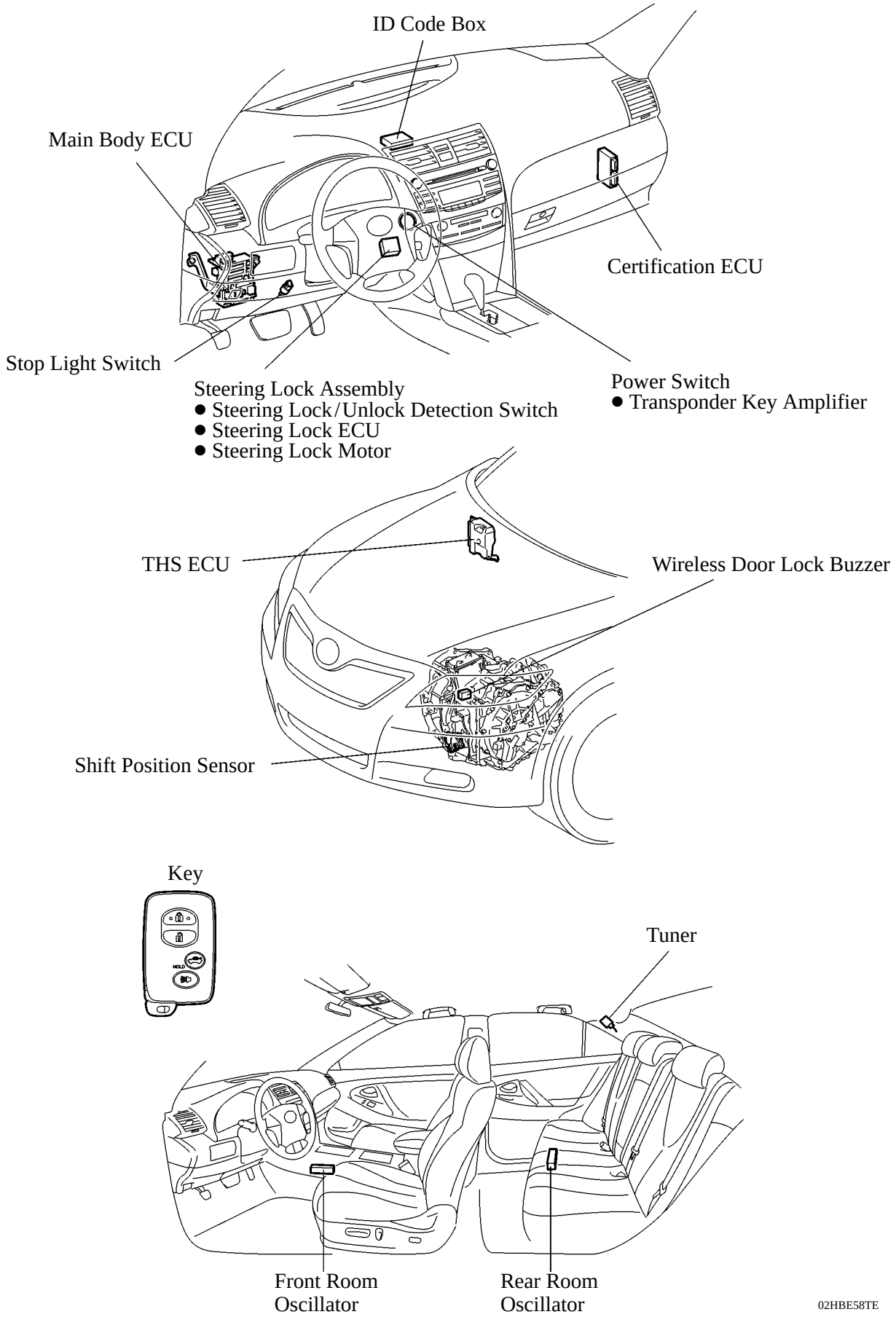

Downloaded from www.Manualslib.com manuals search engine

4. Function of Main Components

Component		Function
Power Switch ● Transponder Key Amplifier		● Transmits the power switch signal to the main body ECU. ● Informs the driver of any power source or system abnormality through the illumination stage of the indicator light. ● Receives the ID code and transmits it to the certification ECU when the key battery is too weak to respond to the tuner based on the room oscillators.
Key		Receives the signals from the oscillators and returns the ID code to the tuner. For details, see page BE-106.
Room Oscillator ● Front and Rear		Receives a request signal from the certification ECU and forms the actuation area in the vehicle interior.
Tuner		Receives the ID code from the key and transmits it to certification ECU.
Main Body ECU		● Switches the power source among four modes (OFF, ACC, IG-ON, and READY) in accordance with the shift position and the state of the stop light switch. ● Controls the smart key system in accordance with the signals received from the switches and each ECU.
Certification ECU		Certifies the ID code received from the tuner and transmits the certification results to the ID code box and steering lock ECU.
Stop Light Switch		Outputs the state of the brake pedal to main body ECU.
ID Code Box		Receives the HV immobilizer disengage/engage signal from the certification ECU, certifies that signal, and transmits it to the THS ECU.
Steering Lock ECU		Receives the steering unlock/lock signal from ID code box, and activates the steering lock motor.
THS ECU		● Receives the THS II start request signal from the main body ECU, and starts the THS II. ● Receives the HV immobilizer disengage/engage signal from the ID code box, and disengages or engages the HV immobilizer.
Combination Meter	Multi-information Display	Informs the driver of malfunctions in the smart key system.
	Master Warning Light	Illuminates simultaneously with a buzzer sound to inform the driver of malfunctions in the smart key system.

Downloaded from www.Manualslib.com manuals search engine

5. Construction and Operation

Power Switch

The power switch consists of a momentary type switch, two color (Amber, Green) LEDs, and transponder key amplifier.

- The amber and green LEDs are for the indicator light.
- The driver can determine the present power source and check whether the engine can start or not in accordance with the illumination state of the indicator light.
- When the main body ECU detects an abnormality with the smart key start system, it makes the amber indicator light flash. If the engine is stopped in this state, it might not be possible to restart it.

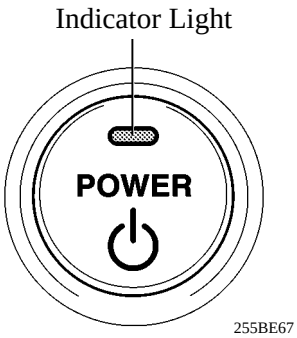

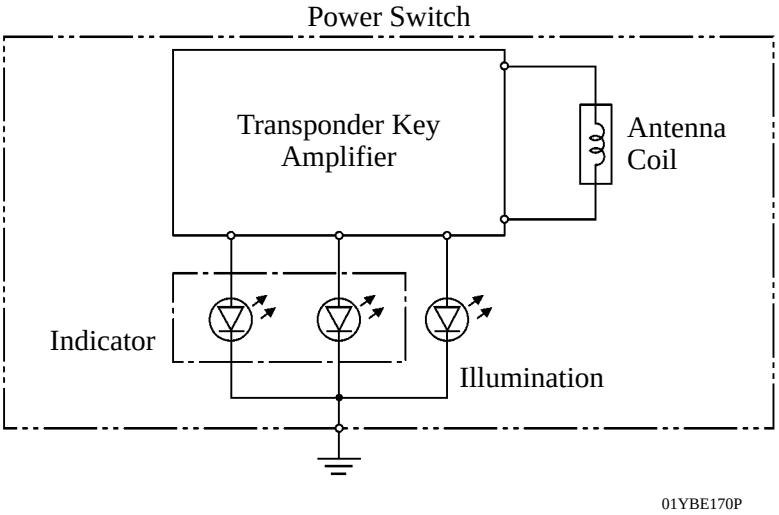

▶ Indicator Light Condition ◀

Power Source Condition	Indicator Light Condition	
	Brake pedal not depressed	Brake pedal depressed with shift lever in “P” or “N”
OFF	OFF	ON (Green)
ACC, IG-ON	ON (Amber)	ON (Green)
READY	OFF	OFF
Steering lock not unlocked	Flashes (Green) for 15 seconds	Flashes (Green) for 15 seconds
Smart Key System Malfunction	Flashes (Amber) for 15 seconds	Flashes (Amber) for 15 seconds

Downloaded from www.Manualslib.com manuals search engine

Main Body ECU

- Main body ECU consists of the IG relay No.1 and No.2 actuation circuits, CPU, and hold circuit.
- The hold circuit is installed to prevent the power supply to the relays from being cut off when an abnormality occurs in IG Relay No.1 and/or No.2 actuation circuits while driving.

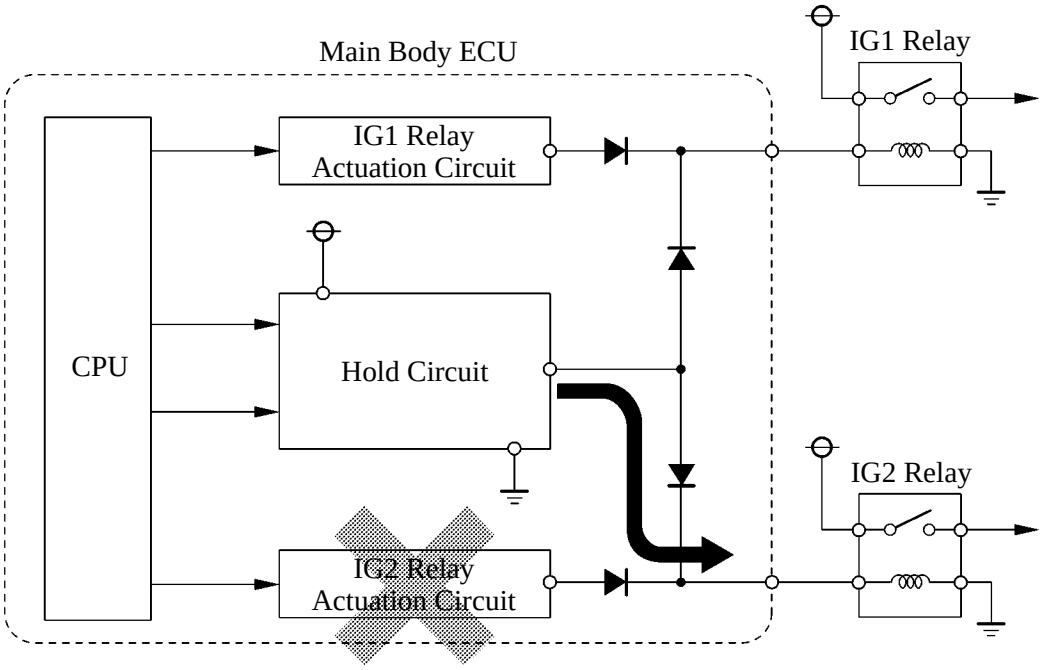

263BE138

Service Tip

The main body ECU constantly stores the present power source state in its memory. Therefore, if the power to main body ECU is interrupted due to the removal of the battery, the main body ECU restores the power source after the battery is reconnected.
For this reason, if the battery is removed when the power switch is in a state other than OFF, the power will be restored to the vehicle at the same time the power is restored to main body ECU (by reconnecting the battery).
Therefore, before removing the battery, be sure to turn the power switch OFF.

Downloaded from www.Manualslib.com manuals search engine

6. Start Function Operation

General

The start function has different power source patterns to suit the brake pedal state and shift lever position.

Pattern	Brake Pedal	Shift Lever	Power Source Pattern
A	Depressed	P Position	When the power switch is pushed once. ● OFF → READY ON (THS II is start)
B	Not Depressed	P Position	Each time the power switch is pushed. ● OFF → ACC → IG-ON → OFF
C		Except P Position	Each time the power switch is pushed. ● OFF → ACC → IG-ON → ACC
D	—	P Position	When the power switch is pushed once. ● IG-ON or READY ON → OFF
E	—	Except P Position	When the power switch is pushed once. ● IG-ON or READY ON → ACC

▶ Transition of Power Source ◀

Shift Position		**P**			**Except P**	
Pattern		B or D	A or D	—	C or E	—
Power Switch		Push	Push	—	Push	Push
Brake		—	Depressed	—	—	Depressed
Hour		—	—	After 1 hour	—	—
Power Source	OFF					
	ACC					
	IG					
	READY					

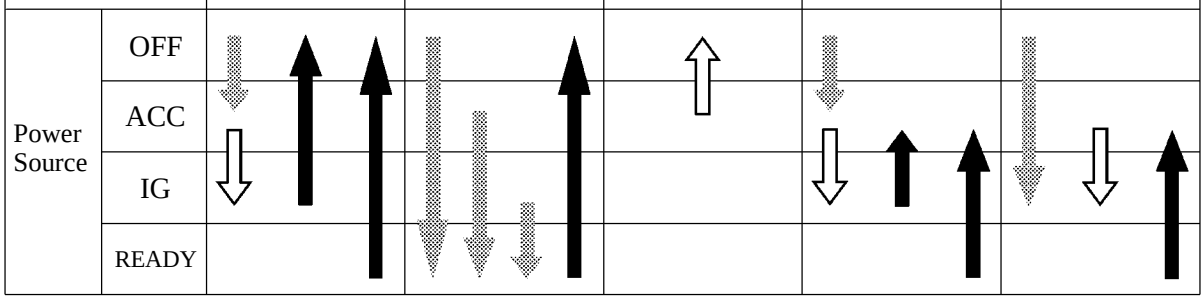

02HBE59TE

⇦ : Transition
⇦ : Only when the key certification is OK
⬅ : Only when the vehicle is stopped

NOTE: Normally, the operation of the power switch is disabled while the vehicle is being driven. However, in an emergency, by pressing the power switch for approximately 3 seconds or more, the driver can stop the THS II (The power switch changes from READY → ACC).

Downloaded from www.Manualslib.com manuals search engine

Pattern A: OFF → READY ON (THS II is start)

Step	System Operation
a)	The driver holds the key and enters the vehicle.
b)	When the driver presses the power switch once with the following conditions satisfied, the main body ECU recognizes the power switch signal and transmits the key certification request to the certification ECU. ● Shift position is P. ● Brake pedal depressed. ● Power source is at OFF.
c)	The certification ECU receives the certification request and transmits a request signal to the front/rear oscillators. These oscillators then transmit the request signal.
d)	The brake pedal is depressed, so the main body ECU turns ON the green indicator light of the power switch.
e)	The moment the key receives the request signal, it transmits its ID code to the tuner. The signal includes the response code.
f)	The tuner receives this code and transmits it to the certification ECU.
g)	The certification ECU judges and certifies the ID code, and transmits a key certification OK signal to the main body ECU.
h)	After receiving the key certification OK signal, the main body ECU turns ON the ACC relay.

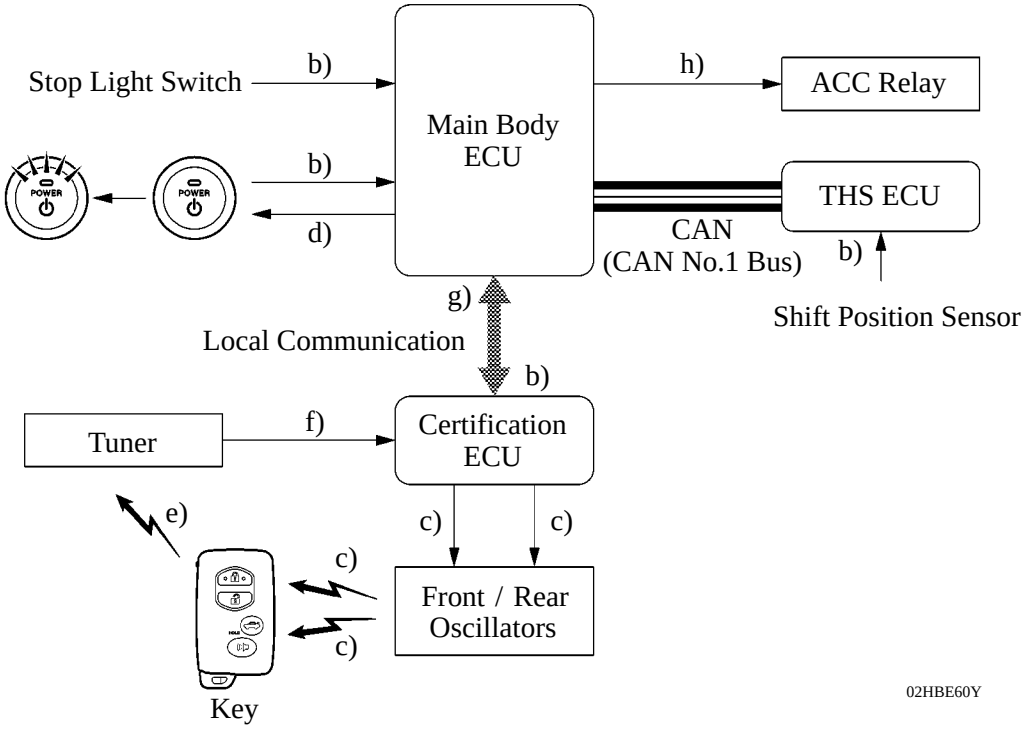

(Continued)

Downloaded from www.Manualslib.com manuals search engine

Step	System Operation
i)	The main body ECU turns ON the ACC relay, and then turns ON the IG1and IG2 relays.
j)	The certification ECU checks that the power source has switched from OFF to IG-ON, and transmits a steering unlock signal to the main body ECU and ID code box.
k)	The main body ECU receives this signal and supplies power to the steering lock ECU.
l)	The steering lock ECU receives the steering unlock signal via the ID code box, and releases the steering lock.
m)	After checking the steering unlock condition, the certification ECU transmits an HV immobilizer disengage signal to the ID code box.
n)	The ID code box certifies the disengage signal of the certification ECU, transmits the HV immobilizer disengage signal to the THS ECU, and disengages the HV immobilizer.
o)	After checking that the steering is in the unlocked condition, the main body ECU transmits a hybrid start signal to the THS ECU.
p)	At this time, the main body ECU will turn OFF the indicator light of the power source switch.

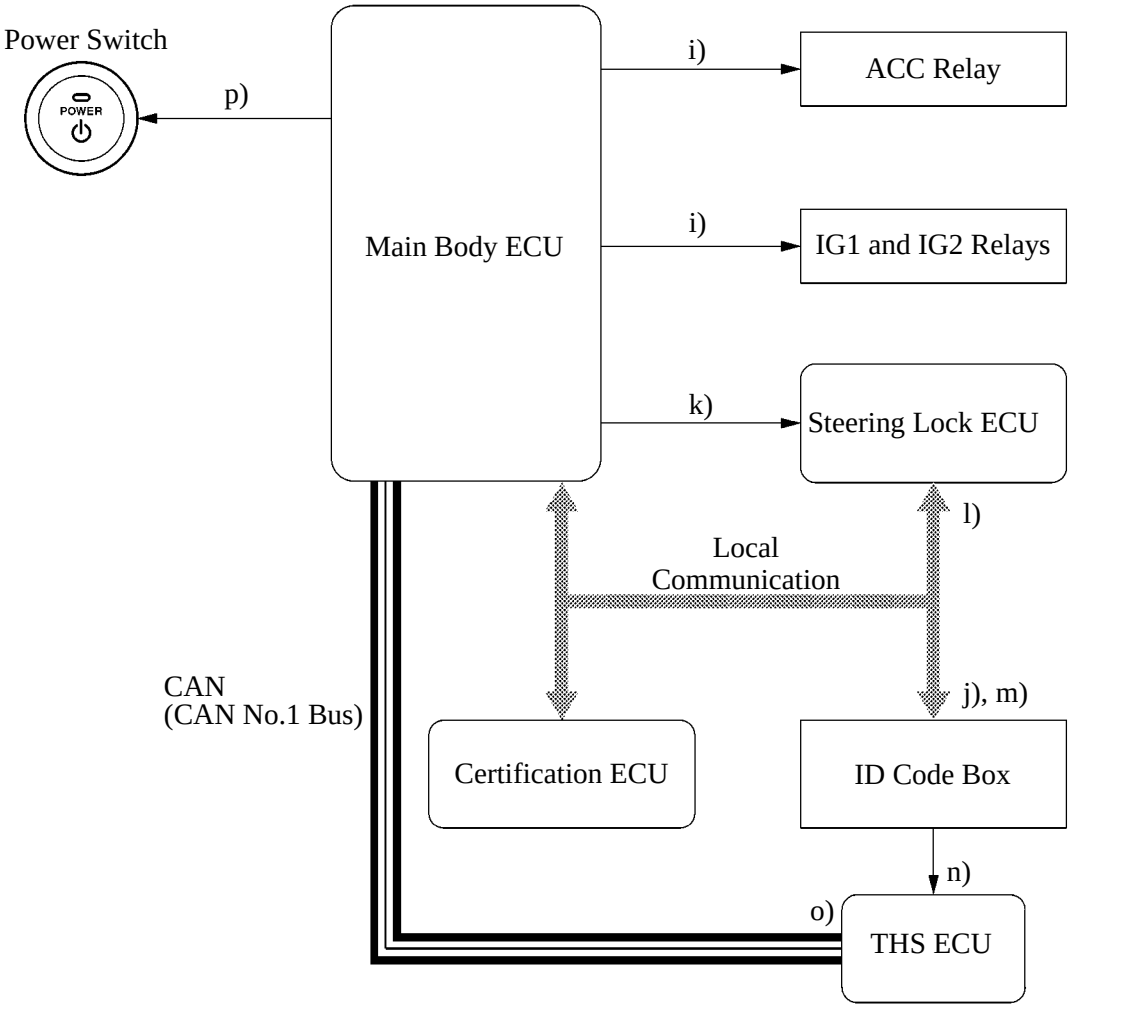

02HBE61Y

Downloaded from www.Manualslib.com manuals search engine

Pattern B: OFF → ACC → IG-ON → OFF

1) OFF → ACC

Step	System Operation
a)	The driver has the key in their possession and enters the vehicle.
b)	When the driver presses the power switch once with the following conditions satisfied, the main body ECU recognizes the power switch signal and transmits the key certification request to the certification ECU. ● Shift position is P. ● Brake pedal is not depressed. ● Power source is OFF.
c)	Due to the brake pedal not being depressed, the main body ECU will turn ON the amber indicator light of the power switch.
d)	The rest of the system operation is the same as **d) to h) in pattern A**. For details, see page BE-95.

2) ACC → IG-ON

Step	System Operation
a)	When the power source is at ACC and the driver pressed the power switch again, the main body ECU recognizes the power switch signal and turns ON the IG relays.
b)	The rest of the system operation is the same as **j) to n) in pattern A**. For details, see page BE-96.

Downloaded from www.Manualslib.com manuals search engine

3) IG-ON → OFF

Step	System Operation
a)	When the power switch is pressed once with the following conditions satisfied, the main body ECU recognizes the power switch signal and turns OFF the ACC, IG relays. ● Shift position is P. ● Brake pedal is not depressed. ● Vehicle speed is 0 km/h (0 mph). ● Power source is in IG-ON mode.
b)	When the power source is switched from IG-ON to OFF, the main body ECU will turn OFF the indicator light of the power switch.
c)	If the driver's door is opened, the main body ECU receives a signal from the courtesy switch (for driver door). Then, the power supply to the steering lock ECU stops in order to lock the steering.

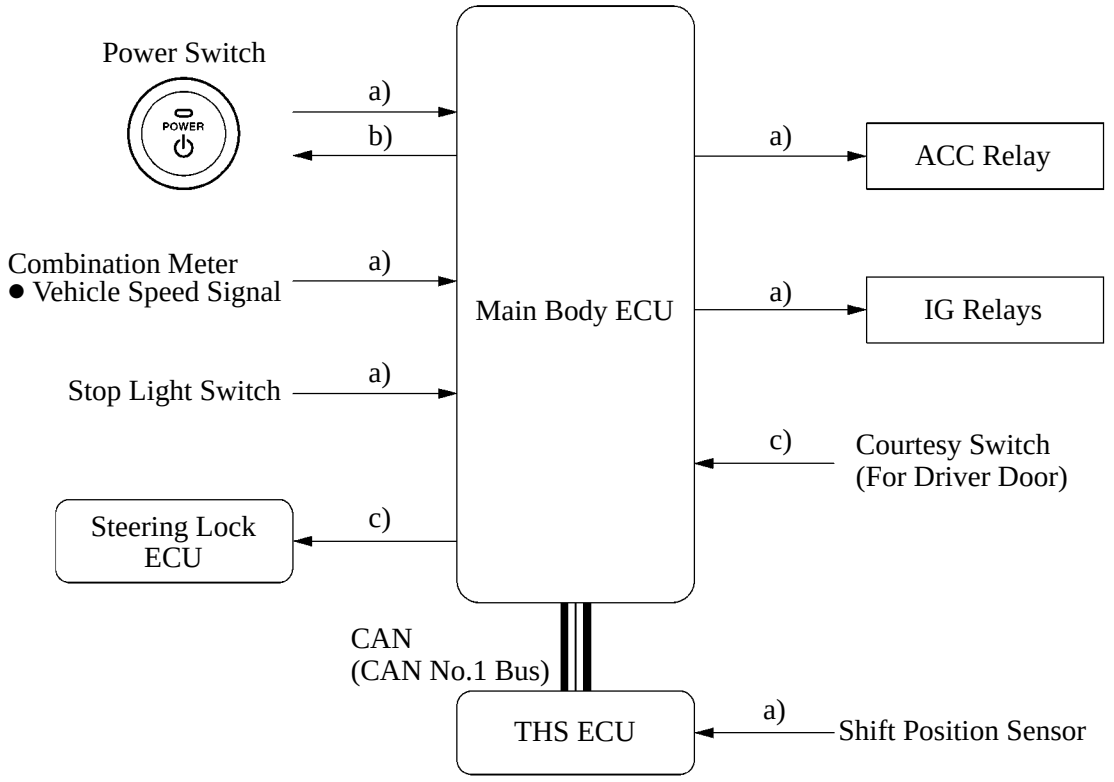

02HBE62Y

Downloaded from www.Manualslib.com manuals search engine

Pattern C: OFF → ACC → IG-ON → ACC

Step	System Operation
a)	The system operations for the power source OFF → ACC → IG-ON are the same as those in pattern B. For details, see page BE-97.
b)	When the power switch is pressed once with the following conditions satisfied, the main body ECU recognizes the power switch signal and turns OFF the IG relays. ● Shift position is in any position except P. ● Brake pedal is not depressed. ● Vehicle speed is 0 km/h (0 mph). ● Power source is in IG-ON mode.
c)	Even after the power source switches from IG-ON to ACC, the indicator light of the power switch will remain illuminated in amber.

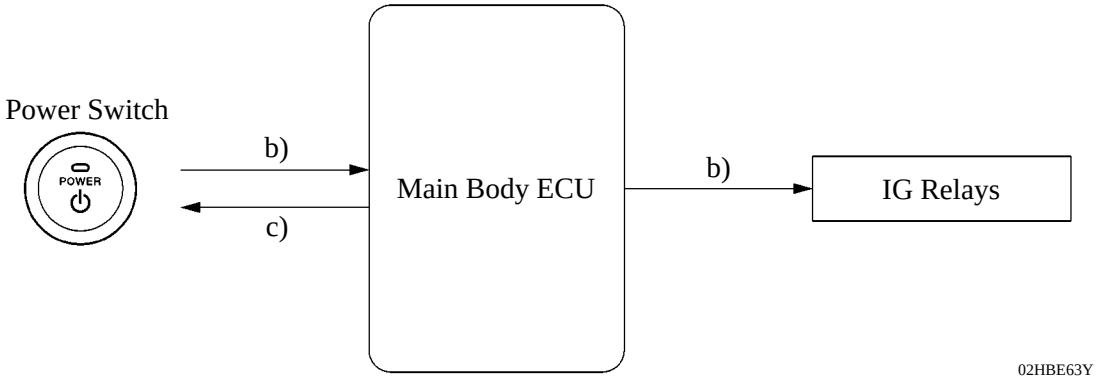

Pattern D: IG-ON or READY → OFF

This system operation is the same as IG-ON → OFF for pattern B. For detail, see page BE-98.

Pattern E: IG-ON or READY → ACC

This system operation is the same as pattern C. For details, see page BE-99. However, the indicator light of the power switch will illuminate as follows:

- When the power source is switched from IG-ON to ACC, the main body ECU makes the amber indicator light of the power switch continue to illuminate.
- When the power source is switched from READY to OFF, the main body ECU turns OFF the indicator light of the power switch.

Downloaded from www.Manualslib.com manuals search engine

When key battery is low

Step	System Operation
a)	To operate the smart key system when the key battery is low, hold the key against the power switch as shown below while depressing the brake pedal.
b)	The main body ECU receives the stop light switch signal and transmits a key certification request signal to the certification ECU.
c)	The certification ECU does not receive an ID code response from the tuner, so it actuates the transponder key amplifier built into the power switch.
d)	The transponder key amplifier outputs an HV immobilizer radio wave to the key.
e)	The key receives the radio wave, and returns a radio wave response to the transponder key amplifier.
f)	The transponder key amplifier combines the key ID codes with the radio wave response, and transmits it to the certification ECU.
g)	The certification ECU judges and verifies the ID code, and transmits a key certification OK signal to the main body ECU. The buzzer in the combination meter sounds at the same time.
h)	After the buzzer sounds, if the power switch is pressed within five seconds while the brake pedal is depressed, the power source switches to READY in the same way as the normal smart key operation.
i)	After the buzzer sounds, if the power switch is pressed within five seconds while the brake pedal is not depressed, the power source will be switched to ACC or IG-ON in the same way as the normal smart key operation.

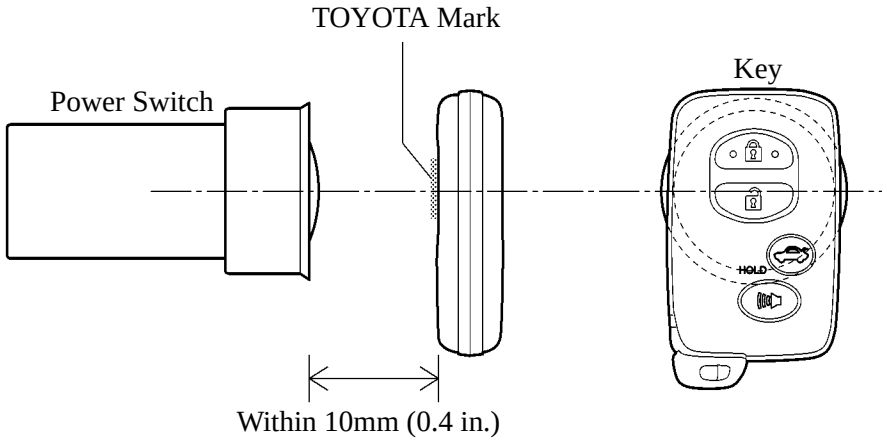

025BE112TE

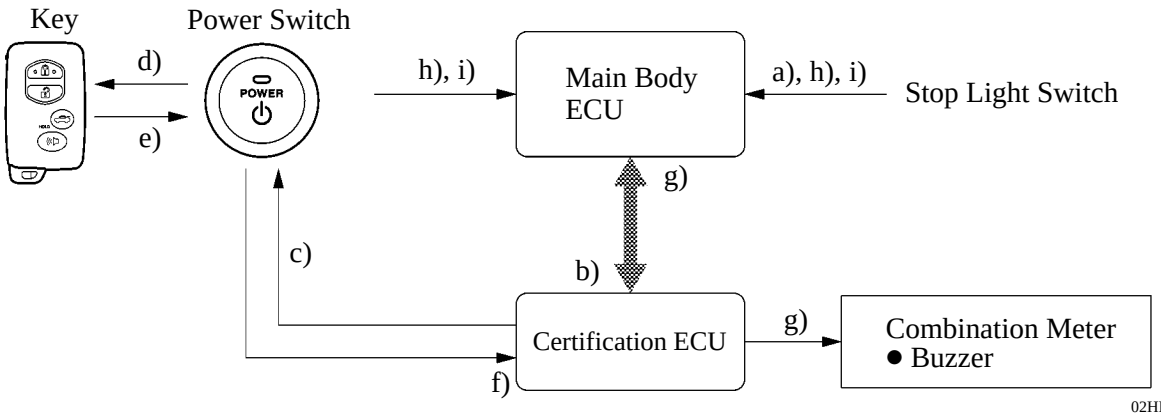

02HBE64Y

Downloaded from www.Manualslib.com manuals search engine

7. Diagnosis

Main body ECU and certification ECU can detect malfunctions in the smart key system when the power source is in the IG-ON mode.
When the ECUs detect a malfunction, the amber indicator light of the power switch flashes to warn the driver. At the same time, the ECUs store 5-digit DTC (Diagnostic Trouble Code) in their memories.

- The indicator light warning continues for 15 seconds even after the power source is switched to OFF.
- The DTC can be read by connecting a hand-held tester to the DLC3.
- The smart key system may not operate successfully if a malfunction occurs.

Service Tip

The THS ECU of the ’07 Camry Hybrid model uses CAN protocol for diagnostic communication. Therefore, a hand-held tester and a dedicated adapter [CAN VIM (Vehicle Interface Module)] are required for accessing diagnostic data. For details, see the 2007 Camry Hybrid Vehicle Repair Manual (Pub. No. RM02H0U).

Downloaded from www.Manualslib.com manuals search engine

■ENTRY FUNCTION

1. System Diagram

The certification ECU controls the entry function. The system diagram below shows the main components that relate to the function.

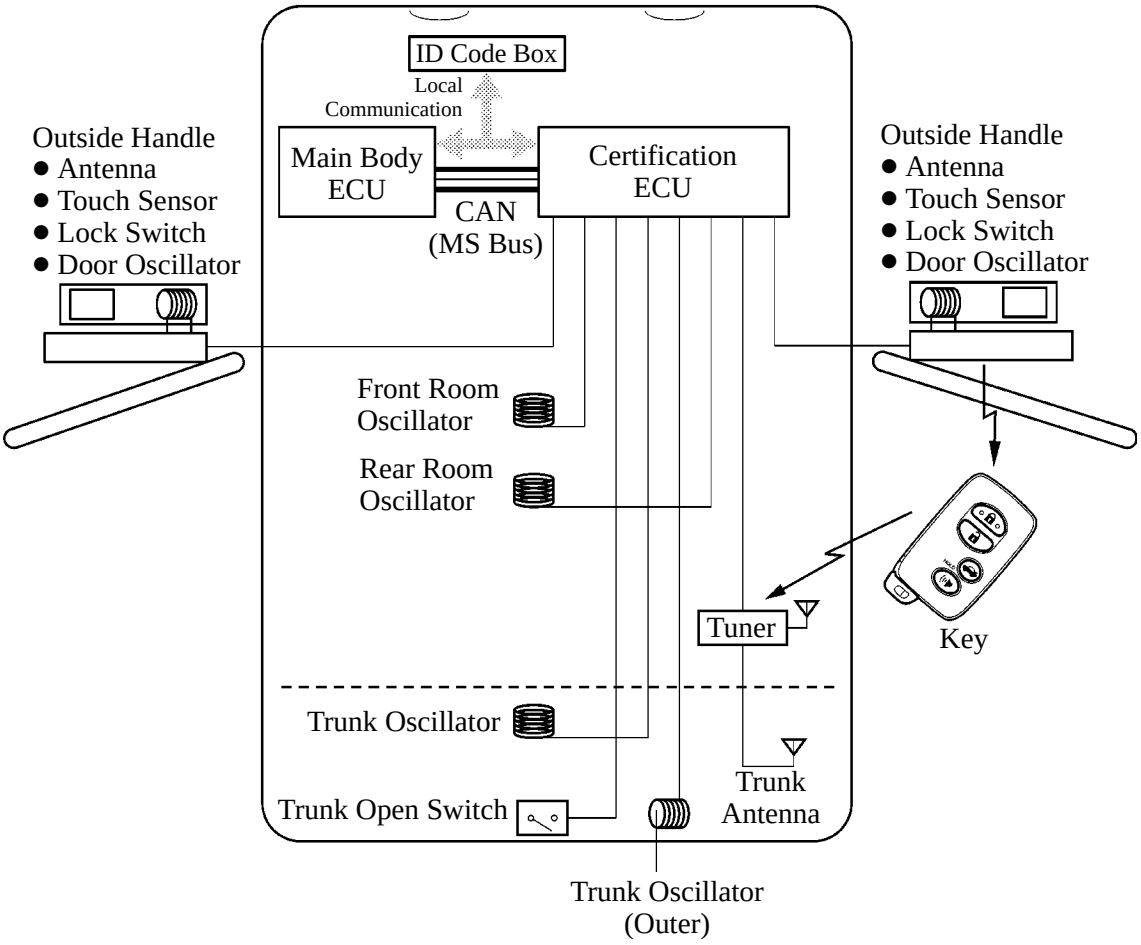

025BE87TE

Downloaded from www.Manualslib.com manuals search engine

2. Layout of Main Components

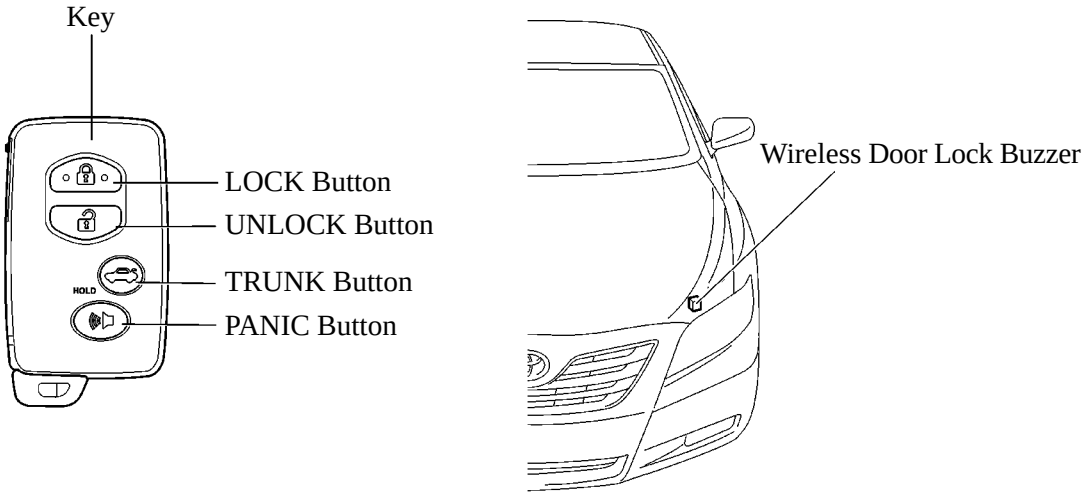

025BE88Y

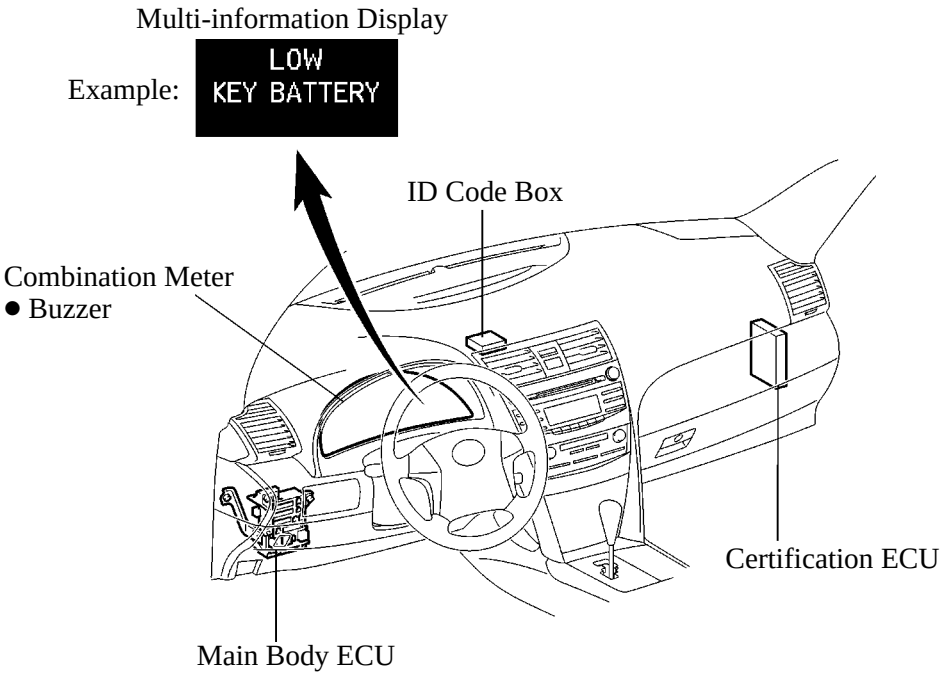

02HBE65TE

Downloaded from www.Manualslib.com manuals search engine

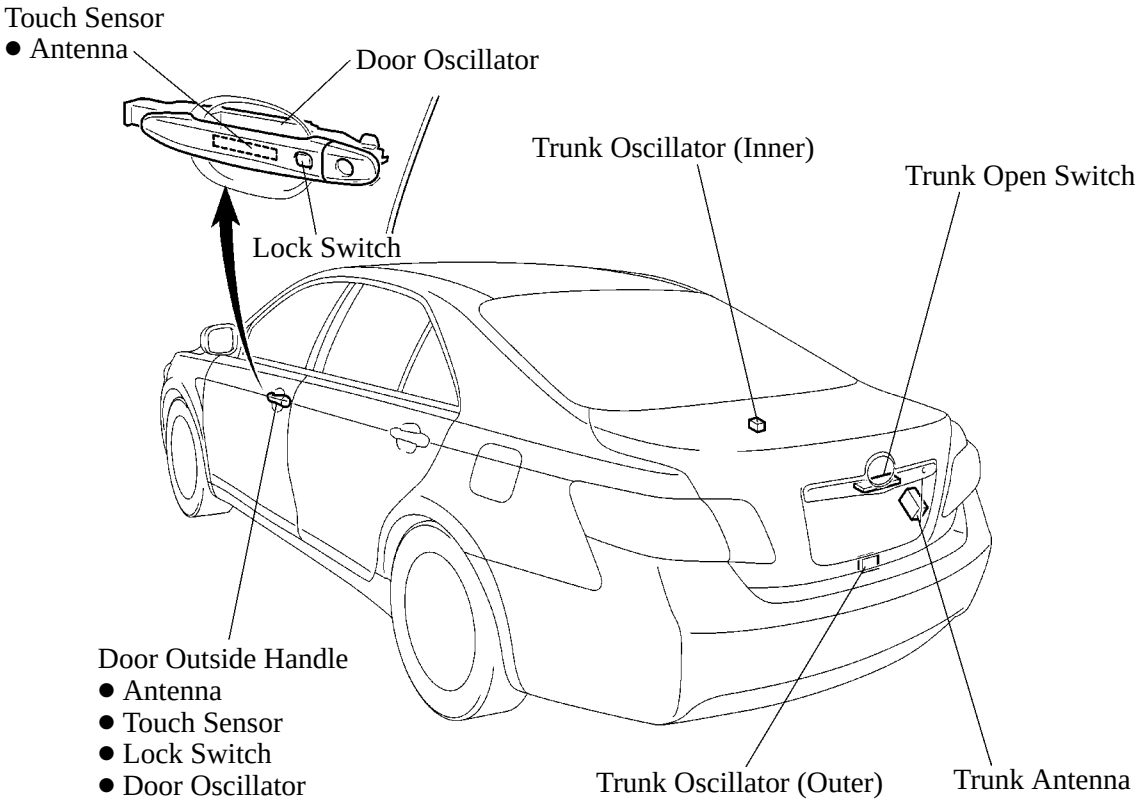

025BE90TE

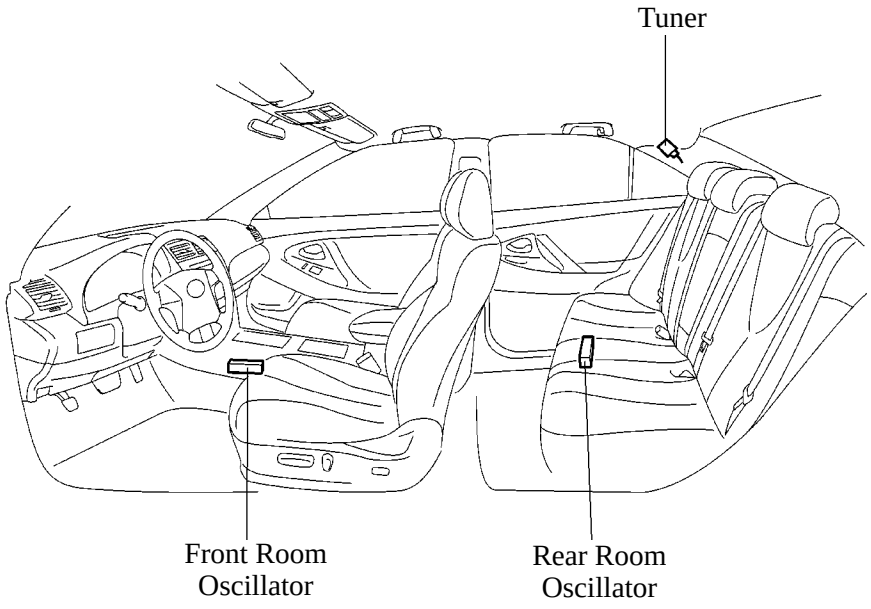

025BE91TE

Downloaded from www.Manualslib.com manuals search engine

3. Function of Main Components

Component		Function
Key		The key consists of a mechanical key, the transmitter for the wireless door lock remote control, the transceiver for the smart key system and a transponder chip for the HV immobilizer control.
Certification ECU		Controls the smart key system in accordance with the signals from each oscillator, various switches, ECUs and the key. ● Judges and certifies the ID code from the tuner. ● Transmits the HV immobilizer deactivation signal to the ID code box. ● Transmits steering unlock signals to the steering lock ECU.
Main Body ECU		Controls the smart key system in accordance with the signals from the various switches, ECUs and combination meter. ● Transmits the key certification request signal to the certification ECU in accordance with the power switch signal, and turns the relays ON and OFF. ● Receives the request signal from the certification ECU and actuates the door lock motor to unlock or lock the door. ● Transmits the condition each door to the certification ECU.
ID Code Box		Receives and certifies the HV immobilizer deactivation signal transmitted from the certification ECU, and sends it to the THS ECU.
Outside Handle (Front RH and LH)	Antenna	Transmits the request signals.
	Touch Sensor	Detects when a person touches the inside of an outer door handle.
	Lock Switch	Transmits door lock request signals to the certification ECU.
	Door Oscillator	Receives the request signal from the certification ECU, and creates an actuation area around front door.
Room Oscillator ● Front and Rear		Receives the request signal from the certification ECU, and forms the actuation area in the vehicle interior.
Trunk Oscillator ● Inner		Receives the request signal from the certification ECU, and forms the actuation area in the trunk.
Trunk Oscillator ● Outer		Receives the request signal from the certification ECU, and forms the actuation area around the trunk lid.
Tuner		● Receives the ID code from the key in the actuation area and transmits it to certification ECU. ● Receives the ID code from the key in the trunk and transmits it to certification ECU.
Trunk Antenna		Receives the ID code from the key in the luggage room and transmits it to the tuner.
Trunk Open Switch		Transmits a trunk lid open request signal to certification ECU.
Wireless Door Lock Buzzer		Sounds as an answerback for entry lock or unlock to inform the driver.
Combination Meter	Multi-information Display	When the certification ECU detects human error, it warns the driver by sounding the wireless door lock buzzer and the buzzer in the combination meter, and by illuminating a warning on the multi-information display and the master warning light, in accordance with the request signal from the certification ECU.
	Master Warning Light	
	Buzzer	

Downloaded from www.Manualslib.com manuals search engine

4. Construction and Operation

Key

The key consists of a mechanical key, a transmitter for the wireless door lock remote control and a transceiver for the smart key system, and a transponder chip for the engine immobilizer control.

- The transceiver function of the key receives the signals from the oscillators and returns the ID code to the tuner.
- The transmitter function for the wireless door lock remote control has a LOCK button, UNLOCK button, TRUNK button, and PANIC button.
- The transponder chip in the key for the HV immobilizer control returns a signal to the power switch as a response to the radio wave it received from the power switch.
- This mechanical key operates the driver door lock cylinder, glove box lock cylinder and trunk storage extension lock cylinder but cannot be used to start the THS II.

A total of four keys can be registered. For details, see the 2007 Camry Hybrid Vehicle Repair Manual (Pub. No. RM02H0U).

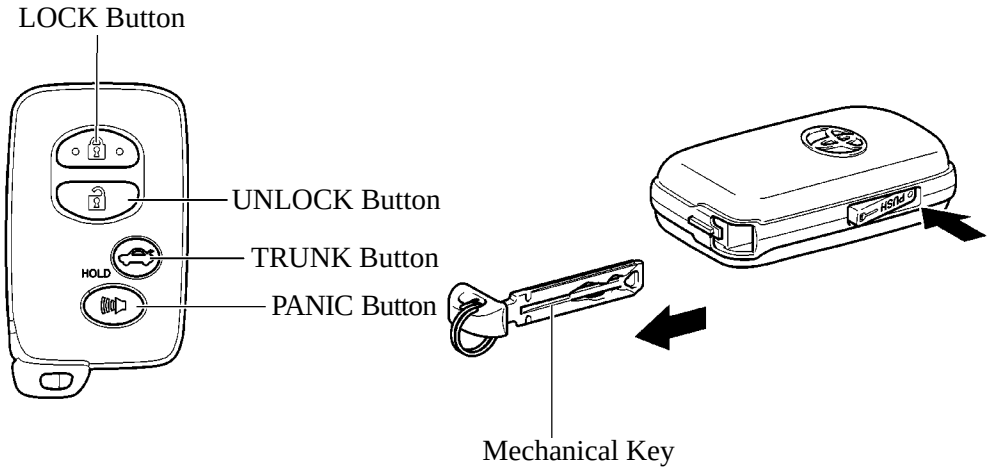

Oscillator (Driver and Front Passenger Door, Front and Rear Rooms, Trunk Inner, Trunk Outer)

Each oscillator functions based on a request signal received from the certification ECU, and creates a key actuation area that is used to detect the presence of a key.
The actuation area formed by the front door oscillator and trunk outer oscillator is approximately 0.7 to 1.0 m (2.3 to 3.3 ft.) from the outside handle of the front doors, or the center of the rear bumper.

- The actuation area of front door oscillator is formed by transmitting a request signal every 0.25 seconds while the power switch is OFF and each door is locked. In this way it detects the proximity of a key. When locking the door using the lock switch on the outer door handle, the actuation area is formed when the lock switch is pressed.
- The actuation area of the trunk outer oscillator is formed when the trunk open switch is ON. It is formed twice to allow the key to be verified.
- The actuation area of the front and rear room oscillator is formed when the driver door is opened or closed, when the start button is pressed, when a warning is activated, or when the lock switch is ON.
- The actuation area of the trunk inner oscillator forms when the trunk lid is closed or the trunk open switch is pressed, and is formed twice to allow the key to be verified.

Downloaded from www.Manualslib.com manuals search engine

5. Entry Function Operation

General

The entry function has the following functions.

Function	Outline
Mechanical Key [See page BE-106]	The key consists of a mechanical key, a transmitter for the wireless door lock remote control and a transceiver for the smart key system, and a transponder chip for the HV immobilizer control.
Wireless Door Lock Remote Control [See page BE-108]	This function is a convenient system for locking and unlocking all the doors or trunk, at a distance. The operation is same as wireless door lock remote control system.
Entry Illumination [See page BE-108]	When a key enters the actuation area of front door oscillators, the front interior light, and power switch illumination illuminate.
Entry Unlock [See page BE-109]	When a key is located in the actuation area front door oscillators, the door will unlock after the inside of an outside door handle is touched.
Entry Unlock Mode Switching [See page BE-110]	Allows selection of one of two modes that can be operated with the entry unlock function. ● Driver Door Mode ● All Door Mode
Entry Lock [See page BE-111]	When a key is located in the actuation area of either front door oscillator and the power source is OFF, the door can be locked by merely pressing the lock switch on the outside door handle.
Trunk Open [See page BE-112]	When a key is in the actuation area of the trunk outer oscillator, the trunk can be opened by merely pressing the trunk open switch.
Prevention of Key Confinement [See page BE-113]	● Prevents the confinement of the key in the vehicle by the door being locked with the outside door handle while the key is still inside the vehicle. ● If the trunk lid is closed while the key is still in the luggage compartment, the warning buzzer sounds. If the trunk open switch is operated for 2 seconds during this period, the trunk lid can be opened.
Warning [See page BE-115]	When any of the situations below occur, the smart key system causes the certification ECU to sound the buzzer in the combination meter and the wireless door lock buzzer, and indicate a warning on the multi-information display in order to the alert the driver. ● An exit warning if the shift lever is in a position other than P and the power source is a mode other than OFF. ● An exit warning if the shift lever is in P and the power source is a mode other than OFF. ● A warning if the occupant leaves with the key in inappropriate circumstances. ● A warning if the power switch is operated while the key is outside the actuation area. ● A warning if the entry lock button on the door handle is operated while the key is inside the vehicle. ● A warning if the key battery is weak.
Battery Saving [See page BE-125]	If the key remains within the actuation area of the front door oscillators, the system maintains periodic communication with key. Therefore, if the vehicle remains parked in that state for a long time, the key battery and the vehicle battery could be drained.
Key Cancel [See page BE-126]	The following key functions can be cancelled by following certain procedures. ● Entry unlock/lock ● Trunk open ● Prevention of key confinement ● Warning
Key Code Registration [See page BE-126]	A total of four keys can be registered. Enables the registering (writing and storing) of transmitter recognition codes in the EEPROM that is contained in the certification ECU.

Downloaded from www.Manualslib.com manuals search engine

Wireless Door Lock Remote Control Function

The wireless door lock remote control function has the following functions:

Function	Outline
All Doors Lock	Pressing the LOCK button of the transmitter locks all doors.
All Doors Unlock	Pressing the UNLOCK button of the transmitter (key) unlocks all doors.
All Doors Unlock (2-step Unlock)*	Pressing the UNLOCK button of the transmitter once unlocks the driver's door, and pressing it again within three seconds unlocks all the doors.
Trunk Opener*	Keeping the TRUNK button of the transmitter pressed longer than about 1 second opens the trunk lid.
Answer Back*	The hazard light flashes once when locking, and flashes twice when unlocking, to indicate that the operation has been completed.
Panic Alarm	Keeping the PANIC button of the transmitter pressed longer than about 2 of a second causes the following functions of the alarm to activate. ● Sounds the horn. ● Flashes the hazard lights, headlights, and taillights. ● Illuminates the interior light (If the interior light switch is in the DOOR position).
Automatic Lock*	If none of the doors are opened within 60 seconds of being unlocked by the wireless door lock remote control, all the doors will be locked again automatically.
Door Ajar Warning*	If any door is open or ajar, pressing the LOCK button of the transmitter will cause the wireless door lock buzzer to sound for about ten seconds.
Repeat	If a door is not locked in response to the locking operation of the transmitter, the integration relay will output a lock signal after approximately 1 second.
Illuminated Entry	When all the doors are locked, pressing the UNLOCK button causes the interior lights to illuminate simultaneously with the unlock operation.
Security	Sends an operation signal as a rolling code.
Wireless Buzzer	The wireless door lock buzzer sounds when the theft deterrent system performs warning operations.

*: The function setting can be changed using the customized body electronics system. For details, refer to Customized Body Electronics System section on page BE-11.

Downloaded from www.Manualslib.com manuals search engine

Entry Unlock

a) When a key enters any actuation area of the door oscillators, the certification ECU judges and certifies the key ID code received from the tuner.

b) After the key certification OK is confirmed, the certification ECU transmits an unlock stand-by signal to the touch sensor of the relevant door.

c) At the same time, the certification ECU transmits the lighting signals to the foot light on the outside rear view mirror and interior lights (power switch illumination and interior light), and turns ON these illuminations (Entry Illumination Function).

d) If the touch sensor is touched during this condition, the certification ECU transmits a door unlock signal to the main body ECU, and unlocks the door.

e) The certification ECU sounds the wireless door lock buzzer twice and main body ECU blinks the hazard warning light twice as an answerback for entry unlock.

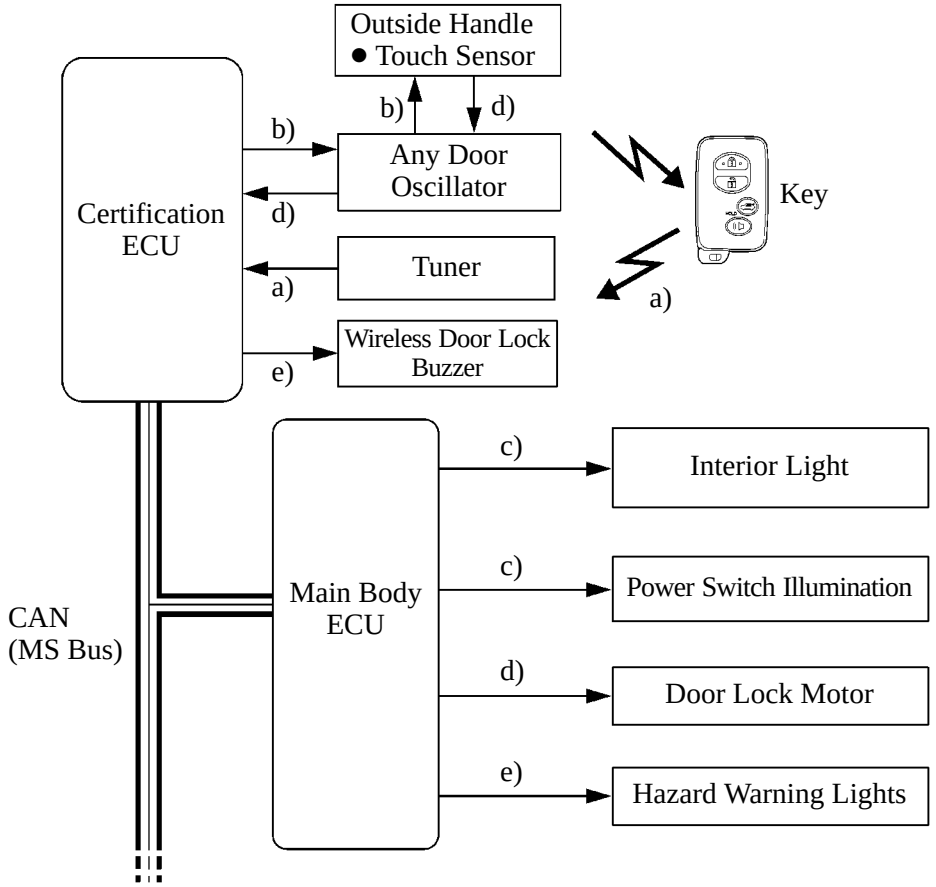

025BE93P

Downloaded from www.Manualslib.com manuals search engine

Entry Unlock Mode Switching

a) When the power source is OFF, press the lock button and one of the other three buttons on the key at the same time for approximately 5 seconds while the key is in the actuation area.

b) The certification ECU receives this signal from the tuner and switches the entry unlock mode.

c) The certification ECU sounds the wireless door lock buzzer and the buzzer of the combination meter to inform the user that the mode has been switched.

d) If the entry unlock mode needs to be switched again, press the lock button and one of the other three buttons on the key at the same time for approximately 5 seconds after the LED of the key goes off.

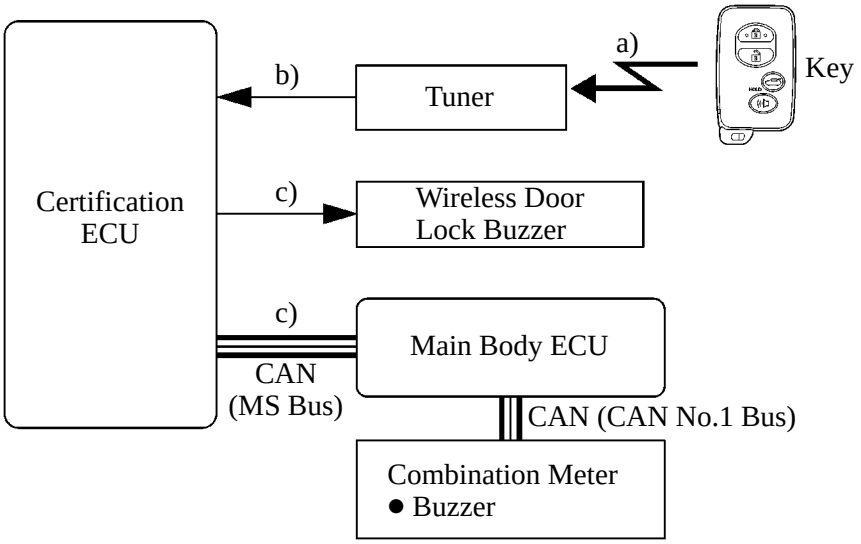

025BE94P

Mode	Wireless Door Lock Buzzer	Buzzer in Combination Meter	Multi-information Display
Driver Door (Default)	Sounds three times	Sounds once	
All Doors (Customized)	Sounds twice	Sounds once	

025BE126TE

NOTE: This function only switches the entry unlock mode of the smart key system. It is not applied to the unlock function using the wireless door lock remote control.

Downloaded from www.Manualslib.com manuals search engine

Entry Lock Function

a) This signal is transmitted to the certification ECU when the driver (who has the key in their possession), exits the vehicle and presses the lock switch on the outside door handle.

b) The certification ECU transmits a request signal for all door and room oscillators to form actuation areas.

c) The key receives this signal and returns the ID code to the tuner.

d) The certification ECU judges and certifies the ID code from the tuner. It then checks the location of the key and, if all the doors are closed, the ECU transmits a door lock signal to the main body ECU.

e) The main body ECU receives this signal and actuates the door lock motors to lock the doors.

f) The main body ECU blinks hazard warning lights once and the certification ECU sounds the wireless door lock buzzer once as an answerback for the entry lock function.

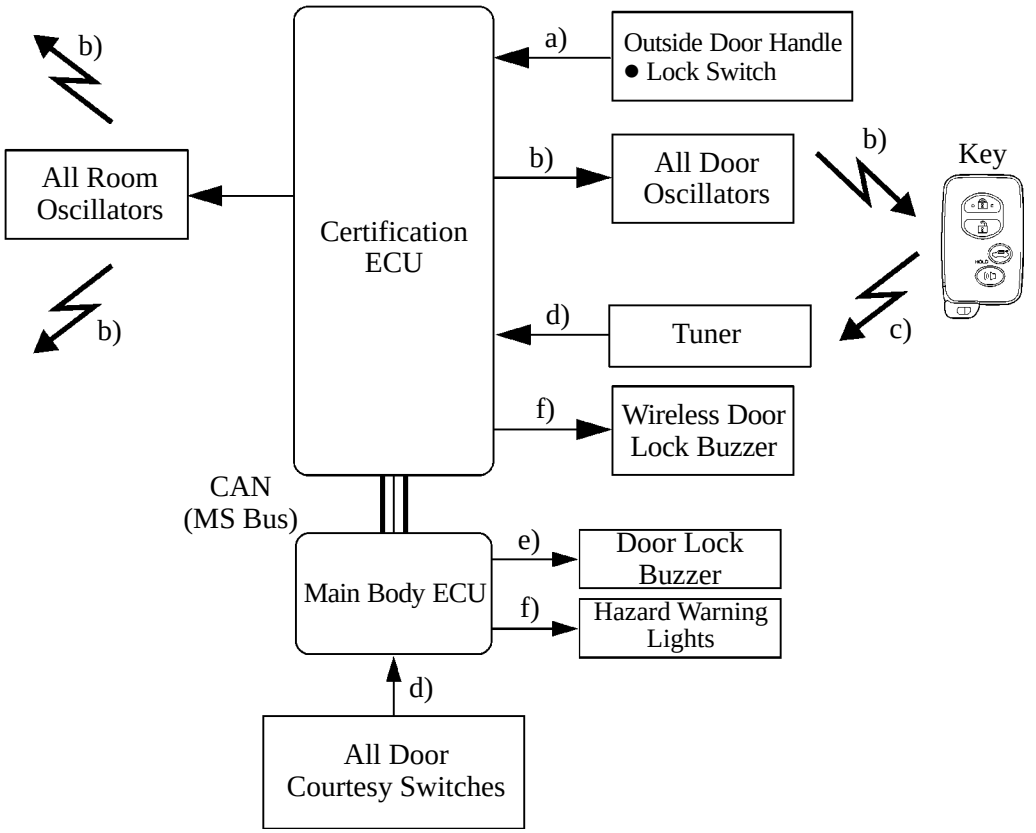

025BE95P

Downloaded from www.Manualslib.com manuals search engine

Trunk Open Function

a) This signal is transmitted to the certification ECU when the driver (who has the key in their possession) pushes the trunk open switch on the outside of the trunk lid.

b) The certification ECU transmits a request signal for all the room, trunk inner and outer oscillators to form actuation areas.

c) The key receives this signal and returns the ID code to the tuner.

d) The certification ECU judges and certifies the ID code, and checks the location of the key. The ECU transmits a trunk open signal to the main body ECU.

e) The main body ECU receives this signal and actuates the trunk opener motor to open the trunk.

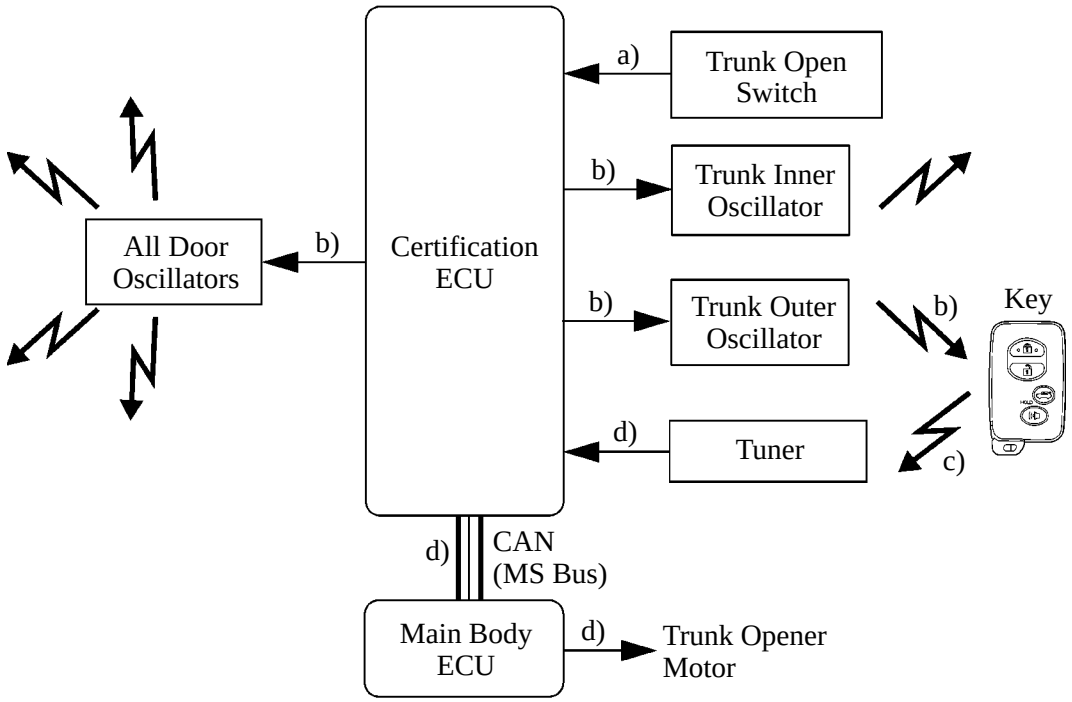

025BE96P

Downloaded from www.Manualslib.com manuals search engine

Prevention of Key Confinement

1) General

This function has two system operations: inside room (cabin) and inside luggage compartment.

2) Inside Room

a) When the door is locked with the outside door handle while the key is still inside the vehicle, the certification ECU receives this signal and transmits a request signal for the front and rear room oscillators to form a actuation area.

b) The key receives this signal and returns the ID code to the tuner.

c) The certification ECU judges and certifies the ID code, and checks the location of the key. The ECU transmits a door unlock signal to the main body ECU.

d) The main body ECU receives the signal and operates each door lock motor to unlock the doors.

e) The certification ECU sounds the wireless door lock buzzer and the buzzer of the combination meter as an answerback for the unlock function that was performed.

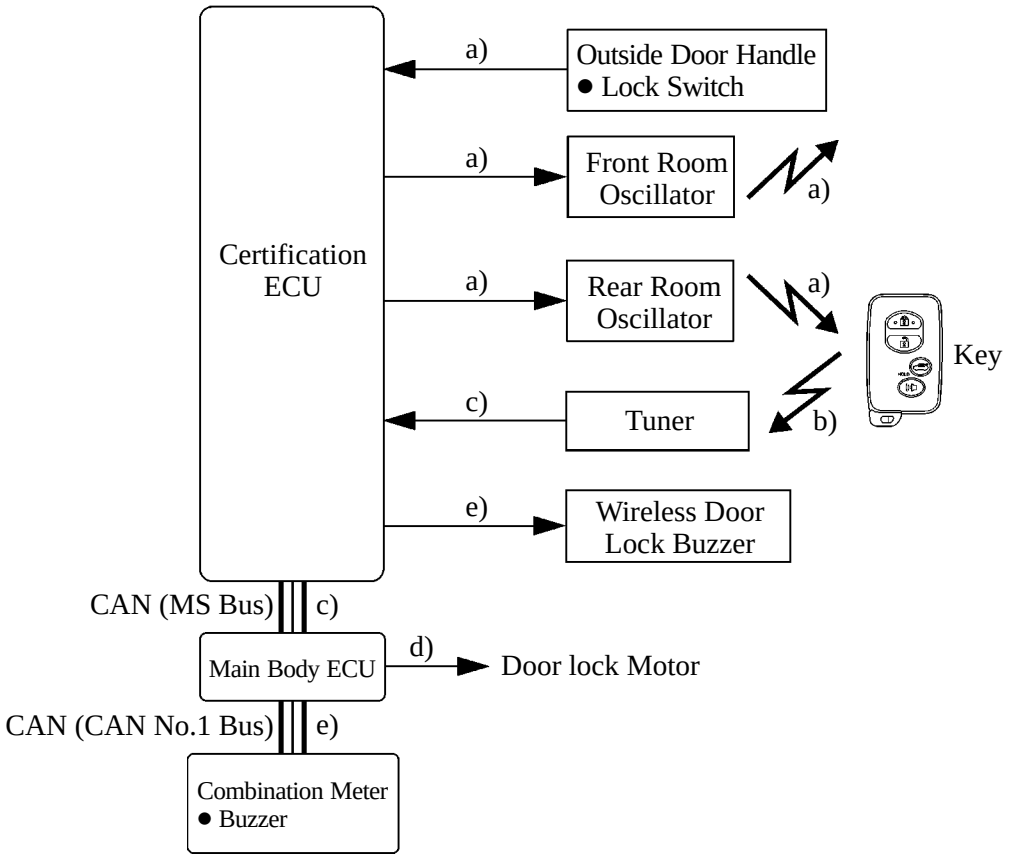

025BE97P

Downloaded from www.Manualslib.com manuals search engine

3) Inside Luggage Room

a) When the trunk lid is closed while the key is still inside the luggage room and all doors are locked, the certification ECU recognizes that a trunk lid close condition has occurred based on signals from the main body ECU.

b) The certification ECU receives this signal, and transmits a request signal for the trunk inner oscillator to form an actuation area.

c) The key receives this signal and returns the ID code to the tuner.

d) The certification ECU judges and certifies the ID code, and checks the location of the key. The ECU sounds the wireless door lock buzzer for 2 seconds to inform the driver.

e) If the trunk open switch is turned ON (pressed) while the key is inside the luggage room, the certification ECU sends another request signal for the trunk inner oscillator to form an actuation area. The ECU judges and certifies the key and checks its location, before transmitting a trunk open signal to the main body ECU.

f) The main body ECU receives the signal and operates the trunk opener motor to open the trunk.

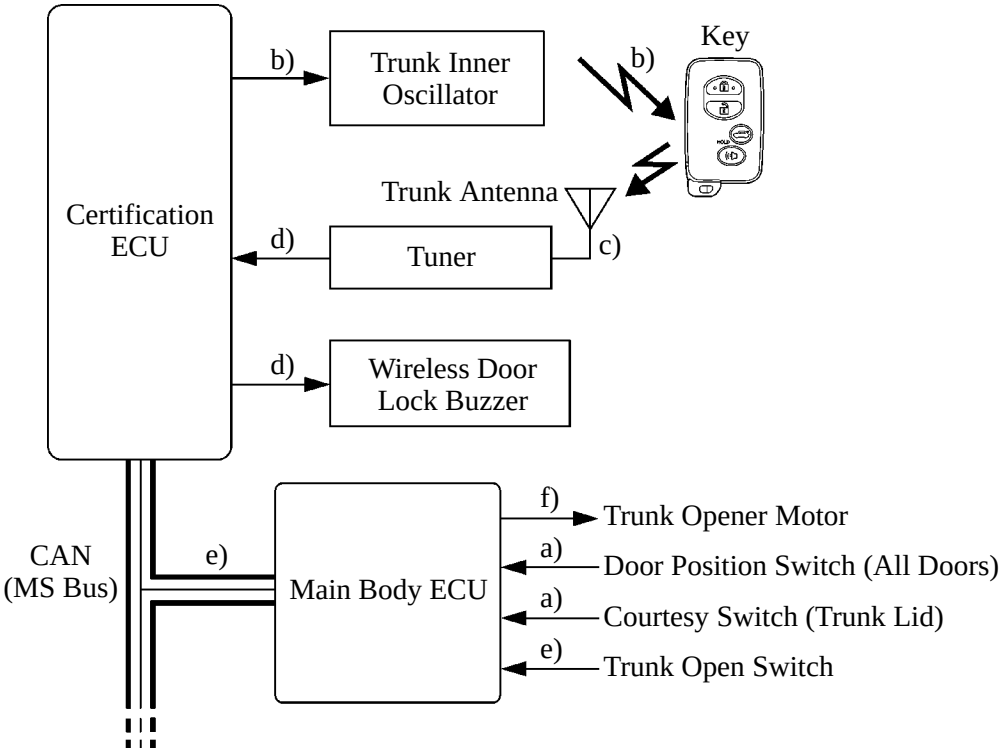

025BE98P

Downloaded from www.Manualslib.com manuals search engine

Warning

1) General

When any of the situations below occur, the smart key system causes the certification ECU to sound a buzzer in the combination meter and the wireless door lock buzzer, and illuminate the multi-information display in order to the alert the driver.

Situation	Condition
A	The shift lever is in any position other than P when the driver gets out of the vehicle. (See page BE-116)
B	The key is left in the vehicle. (See page BE-117)
C	The shift lever is in the P position when the driver gets out of the vehicle. (See page BE-118)
D	A door is ajar. (See page BE-119)
E	Any passenger carries the key out of the vehicle. (See page BE-120)
F	The key is not within the actuation areas. (See page BE-120)
G	The key is left in the cabin. (See page BE-121)
H	The key is left in the luggage room. (See page BE-121)
I	The key battery is weak. (See page BE-122)
J	Steering lock does not release. (See page BE-122)
K	The steering lock mechanism is malfunctioning. (See page BE-123)
L	The main body ECU is malfunctioning. (See page BE-123)
M	The THS II start method is displayed. (See page BE-124)

Downloaded from www.Manualslib.com manuals search engine

2) Situation: A

There are two patterns for situation A.

- Pattern 1: When the shift lever is in any position other than P, the driver opens the door and attempts to get out of the vehicle.
- Pattern 2: Under the conditions of pattern 1, the driver closes the door and attempts to leave the vehicle holding the key.

In these situations, the following control is performed:

Pattern 1.

Possible Effects without Warning		Sudden vehicle start, Vehicle theft, Vehicle roll-away
Warning Condition		The warning is activated when all of the following conditions are met: ● Power source is in a mode other than OFF. ● Shift lever is in any position except P. ● Vehicle speed is 0 mph (0 km/h).
Combination Meter	Buzzer	Continuous sound
	Multi-information Display	—
	Master Warning Light	—
Wireless Door Lock Buzzer		—
Power Switch Indicator Light		—
Warning Stop Condition		The warning is stopped when one of the following conditions is met: ● Power source is OFF. ● Shift lever is in the P position. ● Vehicle speed is above 0 mph (0 km/h).

Pattern 2.

Possible Effects without Warning		Sudden vehicle start, Vehicle theft, Vehicle roll-away
Warning Condition		The warning is activated when all of the following conditions are met: ● Shift lever is in any position except P. ● Power source is in a mode other than OFF. ● Vehicle speed is 0 mph (0 km/h). ● Key is not in the vehicle. ● Driver door is opened → closed.
Combination Meter	Buzzer	Continuous sound
	Multi-information Display	The following warnings are alternately displayed: SHIFT TO P RANGE (025BE99P) KEY IS NOT DETECTED (025BE100P)
	Master Warning Light	Flash
Wireless Door Lock Buzzer		Sounds continuously
Power Switch Indicator Light		—

Downloaded from www.Manualslib.com manuals search engine

Warning Stop Condition	● Key is in the vehicle.	
		● The wireless door lock buzzer stops. ● Multi-information Display: SHIFT TO P RANGE 025BE99P
	● Vehicle speed is above 0 mph (0 km/h).	
		● The wireless door lock buzzer stops. ● Multi-information Display: KEY IS NOT DETECTED 025BE100P
	● Power source is OFF.	
		All warning operations stop.

3) Situation: B

There are two patterns for situation B.

- Pattern 1: When the driver's door is open, the driver changes the power source mode to ACC and attempts to leave the vehicle.
- Pattern 2: When the driver's door is open, the driver changes the power source mode from ON to OFF and attempts to leave the vehicle.

In these situations, the following control is performed:

Pattern 1. and Pattern 2.

Possible Effects without Warning		Vehicle theft
Warning Condition		The warning is activated when one of the following conditions is met: ● Power source is in ACC mode and the driver door is opened. ● Power source is in OFF mode the steering is unlocked, and the driver door is opened.
Combination Meter	Buzzer	Continues to sound at short and even intervals
	Multi-information Display	—
	Master Warning Light	—
Wireless Door Lock Buzzer		—
Power Switch Indicator Light		—
Warning Stop Condition		The warning is stopped when one of the following conditions is met: ● Power source is in ON mode. ● Driver door is closed. ● Power source is in OFF mode and the steering is locked.

Downloaded from www.Manualslib.com manuals search engine

4) Situation: C

There are two patterns for situation C.

- Pattern 1: When the shift lever is in the P position, the driver closes the driver's door and attempts to leave the vehicle while holding the key.
- Pattern 2: Under the conditions of pattern 1, the driver presses the lock switch on the door outside handle.

In these situations, the following control is performed:

Pattern 1.

Possible Effects without Warning		Vehicle theft, Engine cannot be restarted, Discharged battery
Warning Condition		The warning is activated when all of the following conditions are met: ● Shift lever is P. ● Power source is in a mode other than OFF. ● Key is not in the vehicle. ● Driver door is opened → closed.
Combination Meter	Buzzer	Sounds once
	Multi-information Display	KEY IS NOT DETECTED 025BE100P
	Master Warning Light	Flash
Wireless Door Lock Buzzer		Sounds three times
Power Switch Indicator Light		—
Warning Stop Condition		The warning is stopped when one of the following conditions is met: ● Power source is OFF. ● Key is in the vehicle.

Downloaded from www.Manualslib.com manuals search engine

Pattern 2.

Possible Effects without Warning		Vehicle theft, Discharged battery
Warning Condition		The warning is activated when all of the following conditions are met: ● Shift lever is P. ● Power source is in a mode other than OFF. ● All doors are closed. ● The key is outside the vehicle (within one of the actuation areas).
Combination Meter	Buzzer	—
	Multi-information Display	—
	Master Warning Light	—
Wireless Door Lock Buzzer		Sounds for 2 seconds
Power Switch Indicator Light		—
Warning Stop Condition		The warning is stopped when one of the following conditions is met: ● The power source is OFF and the key is not within the actuation areas. ● Key is in the vehicle.

5) Situation: D

The lock switch on the door outside handle is pressed to perform entry lock with a door open.
In this situation, the following control is performed:

Possible Effects without Warning		Vehicle theft
Warning Condition		The warning is activated when all of the following conditions are met: ● Power source is OFF. ● Any doors are opened. ● Entry lock button on the outer door handle is operated.
Combination Meter	Buzzer	—
	Multi-information Display	—
	Master Warning Light	—
Wireless Door Lock Buzzer		Sounds continuously
Power Switch Indicator Light		—
Warning Stop Condition		The warning is stopped when one of the following conditions is met: ● Power source is in a mode other than OFF. ● All doors are closed. ● Wireless door lock remote function is unlocked. ● Entry unlock is operated ● 10 seconds have elapsed since the wireless door lock buzzer was activated.

Downloaded from www.Manualslib.com manuals search engine

6) Situation: E

When the engine is left running, a passenger leaves the vehicle holding the key.
In this situation, the following control is performed:

Possible Effects without Warning		Engine cannot be restarted
Warning Condition		The warning is activated when all of the following conditions are met: ● Power source is in a mode other than OFF. ● Door except driver door is opened → closed. ● Vehicle speed is 0 mph (0 km/h). ● Key is not in the vehicle.
Combination Meter	Buzzer	Sounds once
	Multi-information Display	KEY IS NOT DETECTED 025BE100P
	Master Warning Light	Flash
Wireless Door Lock Buzzer		Sounds 3 times
Power Switch Indicator Light		—
Warning Stop Condition		The warning is stopped when one of the following conditions is met: ● Power source is OFF. ● Vehicle speed is above 0 mph (0 km/h). ● Key is in the vehicle.

7) Situation: F

When the key is not in the cabin or the key battery is dead, the driver attempts to start the engine or change the power mode to ON.
In this situation, the following control is performed:

Possible Effects without Warning		Confuses the user
Warning Condition		The warning is activated when all of the following conditions are met: ● Power switch is pushed. ● Key is not in the vehicle.
Combination Meter	Buzzer	Sounds once
	Multi-information Display	KEY IS NOT DETECTED 025BE100P Displayed for 8 seconds (and then automatically turned off)
	Master Warning Light	Flash
Wireless Door Lock Buzzer		—
Power Switch Indicator Light		—
Warning Stop Condition		Check if the key is in the detection area. If the key is in the detection area, press the wireless door lock switch and confirm that the indicator comes on. If the indicator does not come on, replace the key battery with a new one.

Downloaded from www.Manualslib.com manuals search engine

8) Situation: G

The lock switch on the door outside handle is pressed to perform entry lock with the key left in the cabin. In this situation, the following control is performed:

Possible Effects without Warning		Vehicle theft
Warning Condition		The warning is activated when all of the following conditions are met: ● Power source is OFF. ● All doors are closed. ● Key is in the vehicle. ● Lock switch on the door outside handle switch is ON.
Combination Meter	Buzzer	—
	Multi-information Display	—
	Master Warning Light	—
Wireless Door Lock Buzzer		Sounds for 2 seconds
Power Switch Indicator Light		—
Warning Stop Condition		The key is removed from the cabin and the lock switch on the door outside handle is pressed again.

9) Situation: H

The luggage door is closed with the key left in the luggage room.
In this situation, the following control is performed:

Possible Effects without Warning		Key Confinement
Warning Condition		The warning is activated when all of the following conditions are met: ● Vehicle speed is 0 mph (0 km/h). ● All doors are closed. ● Trunk open function is available.
Combination Meter	Buzzer	—
	Multi-information Display	—
	Master Warning Light	—
Wireless Door Lock Buzzer		Sounds for 2 seconds
Power Switch Indicator Light		—
Warning Stop Condition		The luggage room is opened using the trunk open function and the key is removed from the luggage room.

Downloaded from www.Manualslib.com manuals search engine

10) Situation: I

The vehicle is driven using a key that has a low battery.
In this situation, the following control is performed:

Possible Effects without Warning		Smart key system does not function
Warning Condition		The warning is activated when all of the following conditions are met: ● Power source switches to OFF after being left in IG-ON for over 20 minutes. ● Key battery voltage is low. ● Key is in the vehicle.
Combination Meter	Buzzer	Sounds once
	Multi-information Display	LOW KEY BATTERY 025BE101P
	Master Warning Light	Flash
Wireless Door Lock Buzzer		—
Power Switch Indicator Light		—
Warning Stop Condition		The key battery is replaced with a new one.

11) Situation: J

Steering lock cannot be released.
In this situation, the following control is performed:

Possible Effects without Warning		Steering usability function
Warning Condition		The steering lock cannot be released, thus the engine is prevented from starting.
Combination Meter	Buzzer	—
	Multi-information Display	S/T IS NOT UNLOCKED 025BE102P Displayed for 15 seconds (and then automatically turned off)
	Master Warning Light	Flash
Wireless Door Lock Buzzer		—
Power Switch Indicator Light		The green indicator blinks at 1-second intervals (goes off automatically in 15 seconds).
Warning Stop Condition		The power switch is pressed while the steering wheel is turned left and right, and the steering lock successfully disengages.

Downloaded from www.Manualslib.com manuals search engine

12) Situation: K

A malfunction of the steering lock ECU is detected.
In this situation, the following control is performed:

Possible Effects without Warning		Malfunction detection
Warning Condition		A malfunction of the steering lock ECU is detected.
Combination Meter	Buzzer	—
	Multi-information Display	CHECK S/T LOCK 025BE103P
	Master Warning Light	Flash
Wireless Door Lock Buzzer		—
Power Switch Indicator Light		The amber indicator blinks at 2-second intervals.
Warning Stop Condition		The steering lock ECU returns to normal.

13) Situation: L

A malfunction of the main body ECU is detected.
In this situation, the following control is performed:

Possible Effects without Warning		Malfunction detection
Warning Condition		A malfunction in the main body ECU is detected.
Combination Meter	Buzzer	—
	Multi-information Display	—
	Master Warning Light	—
Wireless Door Lock Buzzer		—
Power Switch Indicator Light		The amber indicator blinks at 2-second intervals.
Warning Stop Condition		The main body ECU returns to normal.

Downloaded from www.Manualslib.com manuals search engine

14) Situation: M

A warning message appears on the meter when the driver does not follow the proper procedure to start the vehicle.
In this situation, the following control is performed:

Possible Effects without Warning		Usability function
Warning Condition		The warning is activated when all of the following conditions are met: ● Power source is in a mode other than ON. ● Any doors are closed → opened. ● The power source is changed from OFF to ACC more than once with the THS II off and brake pedal not depressed.
Combination Meter	Buzzer	Sounds once
	Multi-information Display	WHEN STARTING, DEPRESS THE BRAKE PEDAL 02HBE78TE
	Master Warning Light	—
Wireless Door Lock Buzzer		—
Power Switch Indicator Light		—
Warning Stop Condition		The warning is stopped when one of the following conditions is met: ● 10 seconds have elapsed since a warning message was displayed. ● The power switch is pushed with the brake pedal depressed.

Downloaded from www.Manualslib.com manuals search engine

Battery Saving

1) Vehicle Battery Saving Function

In the smart key system, signals are emitted outside the vehicle at a prescribed interval (250 msec.) when the doors are locked. Therefore, the vehicle battery could be drained if the vehicle remains parked for a long time. For this reason, the controls listed below are effected.

Condition	Control
No response from key for more than 5 days	Signal transmission interval is extended from 250 msec. to 750 msec.
No response from key for more than 14 days	Automatically deactivates the smart key system.

▶ Reinstatement Conditions ◀

- A wireless door lock remote control signal (lock, unlock, or trunk lid open) is input and the ID matches.
- A user carries the key and pushes a lock switch signal for the outside door handle.
- A door is locked or unlocked using the mechanical key.

2) Key Battery and Vehicle Battery Saving Function

In the smart key system, if the key is constantly located within the vehicle exterior actuation area of the doors, the system will maintain periodic communication with the key. Therefore, if the vehicle remains parked in that state for a long time, the key battery and the vehicle battery could be drained.
For this reason, if this state continues longer than 10 minutes, the smart key system automatically becomes deactivated.

▶ Reinstatement Conditions ◀

- A wireless door lock remote control signal (lock, unlock, or trunk lid open) is input and the ID matches.
- A user who has the key in their possession pushes a lock switch signal on an outside handle.
- A door is locked or unlocked using the mechanical key.

Downloaded from www.Manualslib.com manuals search engine

Key Cancel

Key cancel is operated when certain operations are performed with the vehicle in the following condition:

- Power source is OFF.
- Driver door is closed.
- Driver door is unlocked.

The operation procedure is as follows:

1) Unlock once with the UNLOCK button of the key.
2) Open the driver door within 5 seconds.
3) Unlock twice with the UNLOCK button of the key within 5 seconds.
4) Repeat open → close twice for the driver door within 30 seconds, and open again.
   (Driver Door: Open → Close → Open → Close → Open)
5) Unlock twice with the UNLOCK button of the key within 30 seconds.
6) Repeat open → close once for the driver door within 30 seconds, and open again.
   (Driver Door: Open → Close → Open)
7) Close the driver door within 5 seconds.

When key cancel is activated, the wireless door lock buzzer sounds once.
To return to the original condition, perform the procedures again. When key cancel is returned, the wireless door lock buzzer sounds twice.

Key Code Registration Function

The table below shows the four special coded ID registration function modes through which up to four different codes can be registered. The codes are electronically registered (written to and stored) in the EEPROM. For details of the recognition code registration procedure, refer to the 2007 Camry Hybrid Vehicle Repair Manual (Pub. No. RM02H0U).

Mode	Function
Rewrite	Erases all previously registered codes and registers only the newly received codes. This mode is used whenever a transmitter or the integration relay is replaced.
Add	Adds a newly received code while preserving previously registered codes. This mode is used when adding a new transmitter. If the number of codes exceeds 4, the oldest registered code is erased first.
Confirm	Confirms how many codes are currently registered. When adding a new code, this mode is used to check how many codes already exist.
Prohibit	To delete all the registered codes and to prohibit the wireless door lock function. This mode is used when a transmitter (key) is lost.

Downloaded from www.Manualslib.com manuals search engine

SRS AIRBAG SYSTEM

■DESCRIPTION

1. General

- The driver and front passenger dual-stage SRS (Supplemental Restraint System) airbags supplement the seat belts to help to reduce the shocks to the head and chest of the driver and front passenger in the event of a frontal collision.
- The SRS side airbags help to reduce the shocks to the head and chest of the driver and the front passenger in the event of a side collision.
- The SRS curtain shield airbags help to reduce the shocks to the head and chest of the driver, front passenger and outer rear passengers in the event of a side collision.
- The SRS knee airbag help restrain the lower parts of the bodies of the driver, thus enhancing the excellent passenger protection provided by the seat belts and front airbags.
- A front passenger occupant classification system is used. This enables/disables the front passenger airbag and front passenger side airbag by determining whether or not there is a front passenger seat occupant, and whether it is an adult or child (or child seat), based on the load applied to the passenger seat and the fitted condition of the front passenger seat belt.
- The front passenger airbag door is designed to be invisible. This means that when the airbag inflates, the instrument panel will split along the cleavage line.
- The function of the airbag sensor assembly is to memorize the driver seat belt wearing condition while the airbag is inflating.
- A fuel cut control that stops the fuel pump when any airbags are deployed, is used. For details, see page EG-49.
- When any airbags are deployed, the THS ECU turns OFF the SMR (System Main Relay), in order to shut off the entire power supply. For details, see page TH-54.

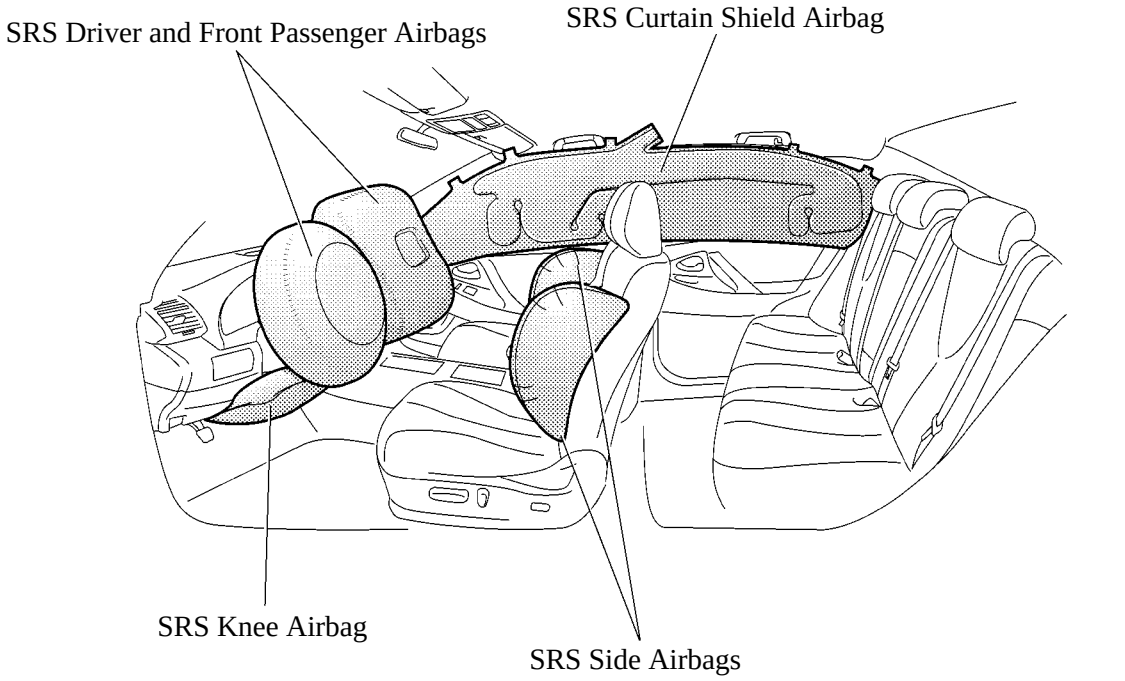

025BE107TE

Downloaded from www.Manualslib.com manuals search engine

■LAYOUT OF MAIN COMPONENTS

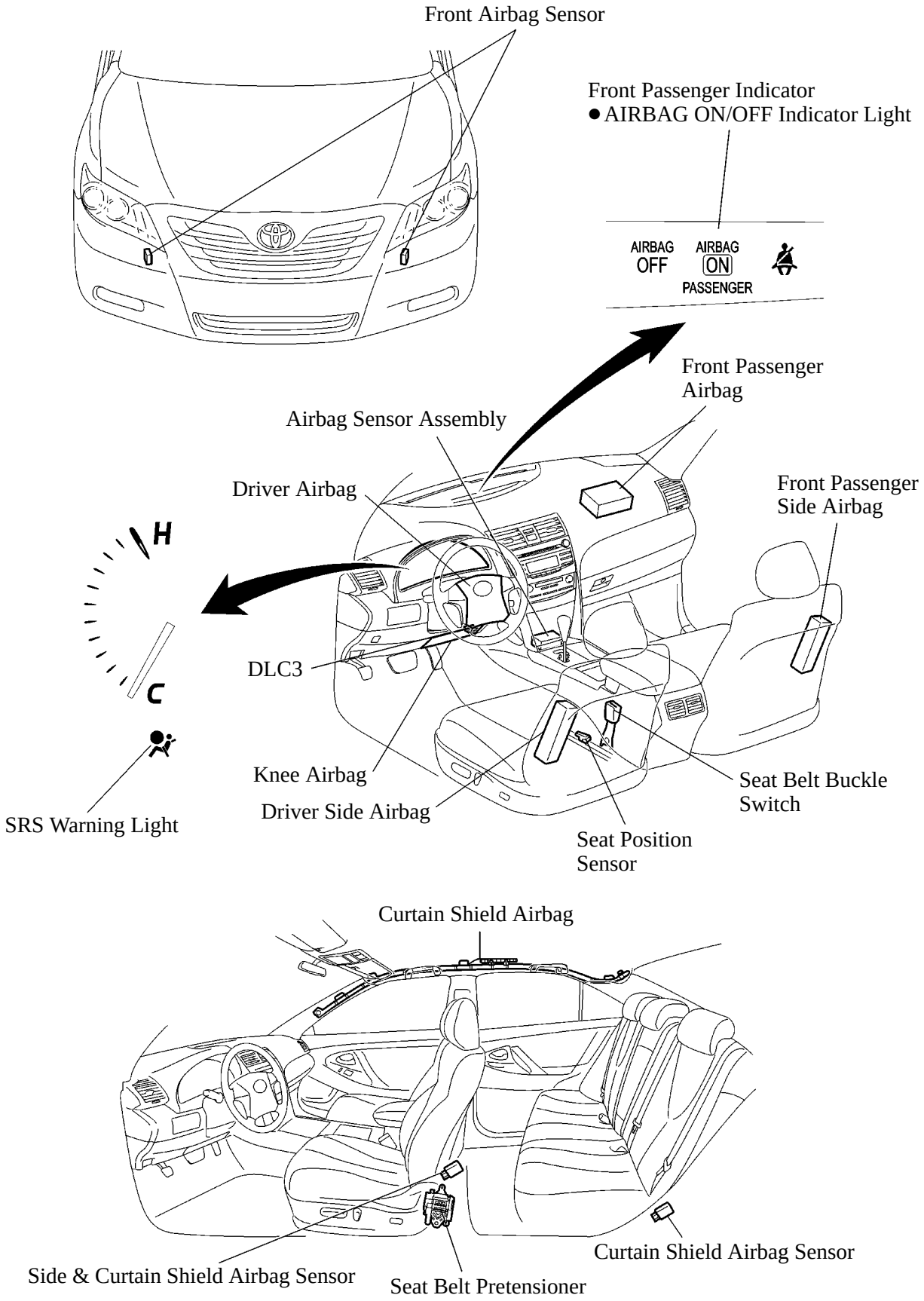

02HBE67TE

Downloaded from www.Manualslib.com manuals search engine

■ WIRING DIAGRAM

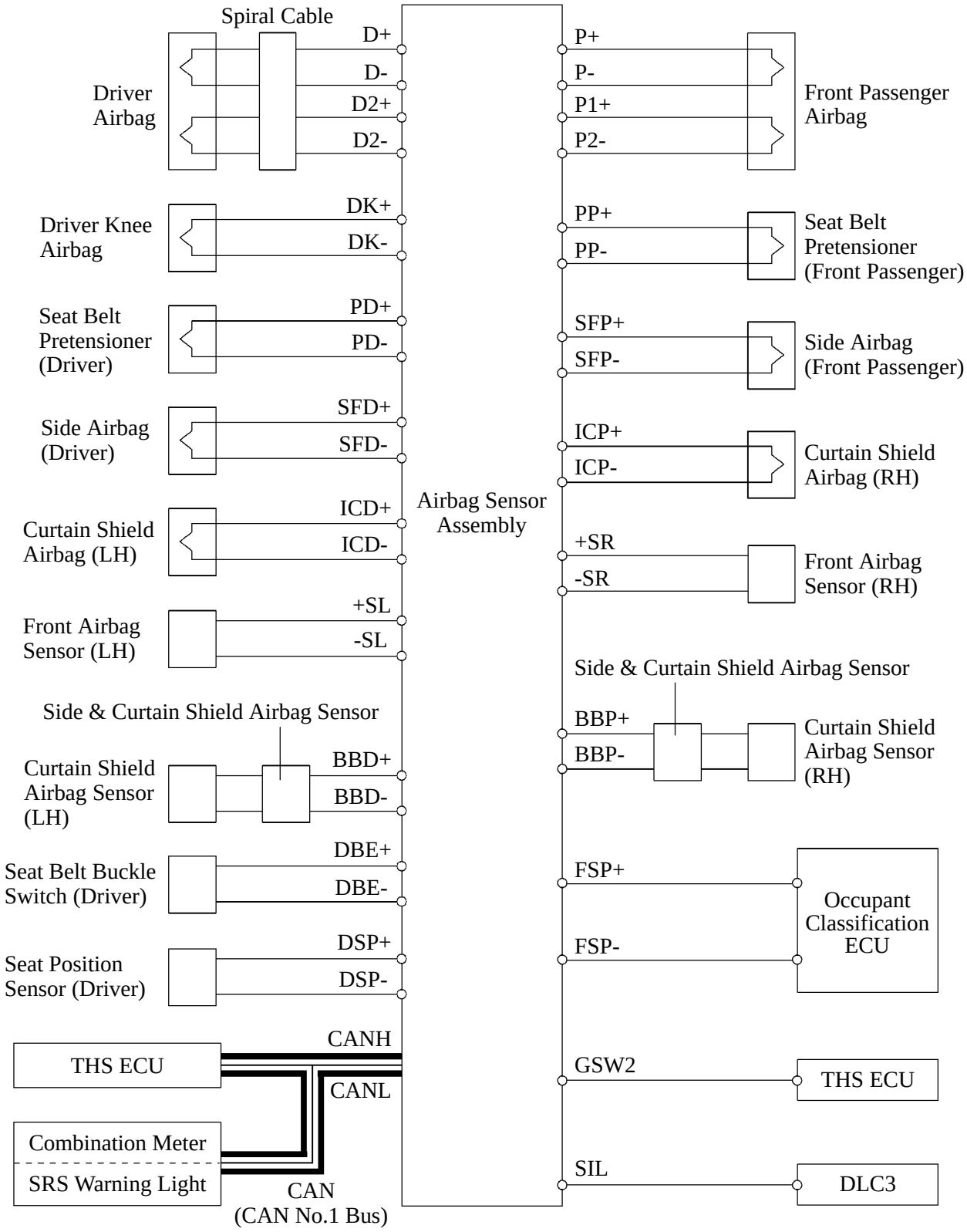

02HBE68Y

Downloaded from www.Manualslib.com manuals search engine

■AIRBAG FOR FRONTAL COLLISION

1. General

- In conjunction with their impact absorbing structure for frontal collisions, the driver and front passenger dual-stage SRS airbags and the driver knee airbag deploy simultaneously, and are supplements to the seat belts. The driver and front passenger dual-stage SRS airbags have been designed to help reduce injuries to the head and chest in the event of a frontal collision. The driver knee airbag restrict the lower parts of the occupant's body, thus enhancing the excellent passenger protection provided by the seat belt and front airbag.
- The deceleration sensor is enclosed in the front airbag sensor. Due to the deceleration of the vehicle during a front collision, a distortion is created in the sensor and converted into an electrical signal. Accordingly, the extent of the initial collision can be detected in detail.

▶ Front Airbag Operation ◀

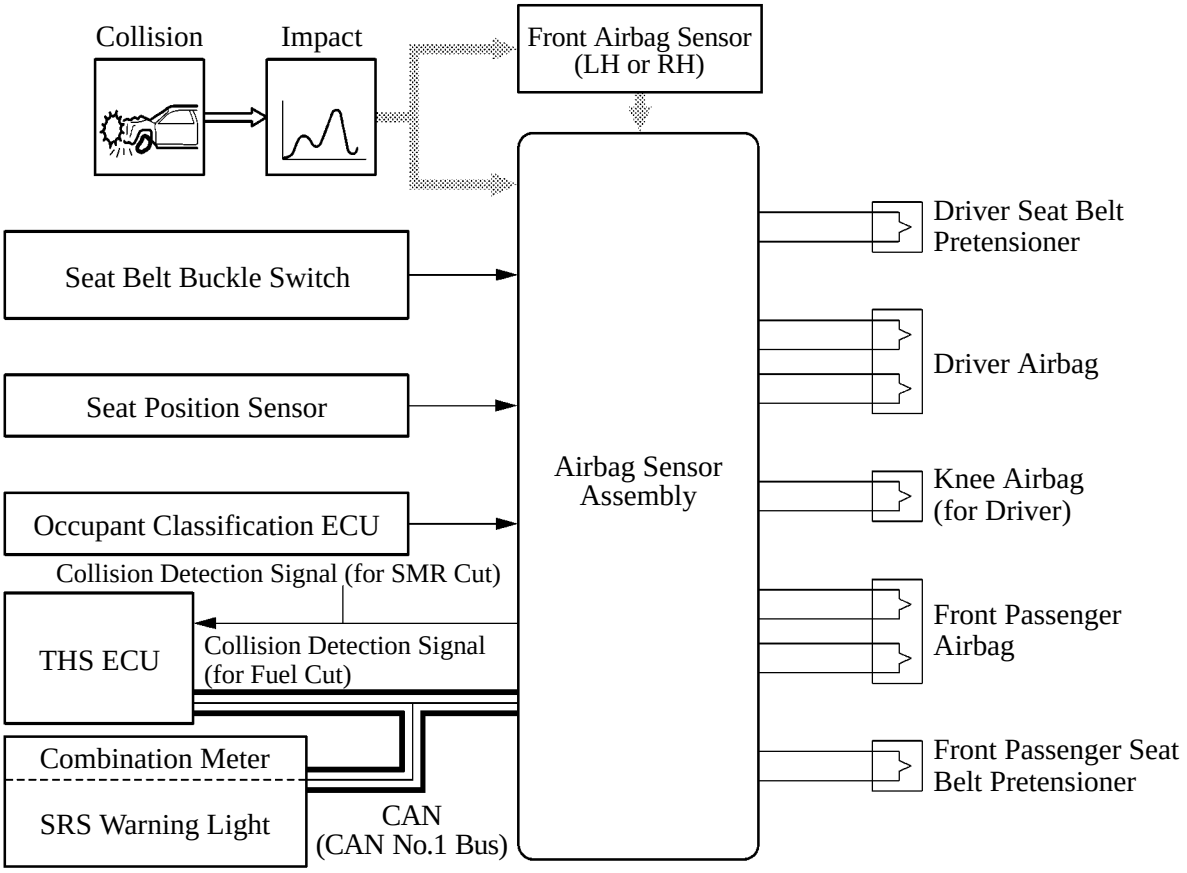

02HBE69TE

Downloaded from www.Manualslib.com manuals search engine

2. Dual-stage SRS Airbag System

General

In this system, when the front airbag sensors and airbag sensor assembly detect a front collision, the airbag sensor assembly judges the extent of impact, seat position and whether or not the seat belts are fastened, thus optimizing the airbag inflating output by delaying the inflation timing of the 2nd initiator and the 1st initiator.

Seat Position Sensor

1) General

The seat position sensor is mounted on the upper rail portion of the driver seat rail, and includes a Hall IC and a magnet. This sensor is used to detect the sliding position of the driver seat.

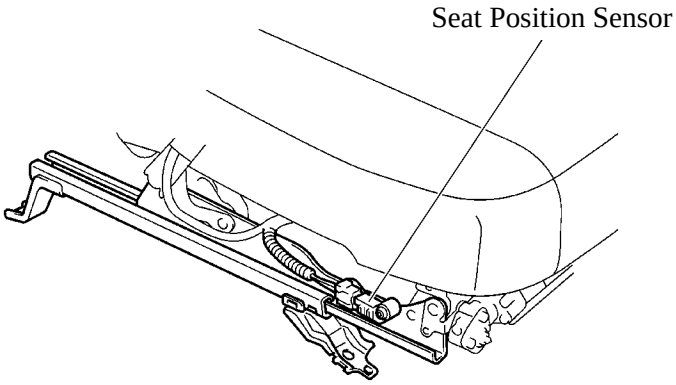

01YBE111Y

2) Operation

When the seat is in the rearward position, the lower rail portion of the seat rail is close to the seat position sensor. When it is in the forward position, the distance between the lower rail portion and the sensor becomes larger.
Thus, the magnetic flux of the magnet inside the seat position sensor varies depending on the seat position. The Hall IC detects this variation and outputs signals to the airbag sensor assembly.

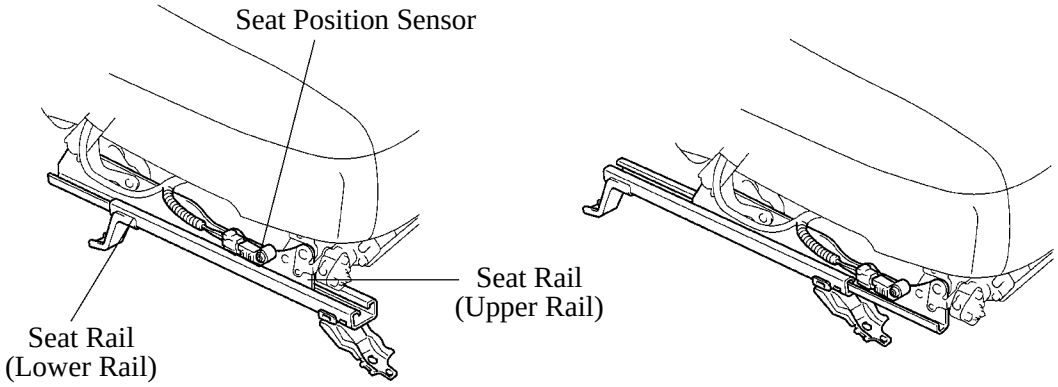

01YBE93Y

Seat position is rearward **Seat position is forward**

Downloaded from www.Manualslib.com manuals search engine

Service Tip

Follow the procedure indicated below to install the seat position sensor.

1) Insert a 1.0 mm (0.04 in.) feeler gauge between the seat position sensor and the lower rail portion.
2) Tighten the mounting bolt to the specified torque with the seat position sensor pushed down as shown.

For details, see the 2007 Camry Hybrid Vehicle Repair Manual (Pub. No. RM02H0U).

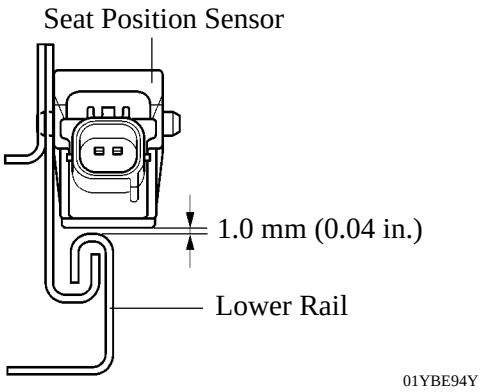

Seat Belt Buckle Switch

The seat belt buckle switch detects whether or not the seat belt is fastened.

- The non-contact type switch is composed of a Hall IC and two magnets, installed into the front seat inner belt assembly.
- The ejector inside the front seat inner belt assembly and the plate installed to the ejector move when the seat belt is removed or inserted. The movement of the plate changes the magnetic flux density of the magnet.
- The Hall IC detects the changes in the magnetic flux density in accordance with the seat belt removal or insertion, and outputs a signal to the airbag sensor assembly (for driver seat) and occupant classification ECU (for front passenger seat).

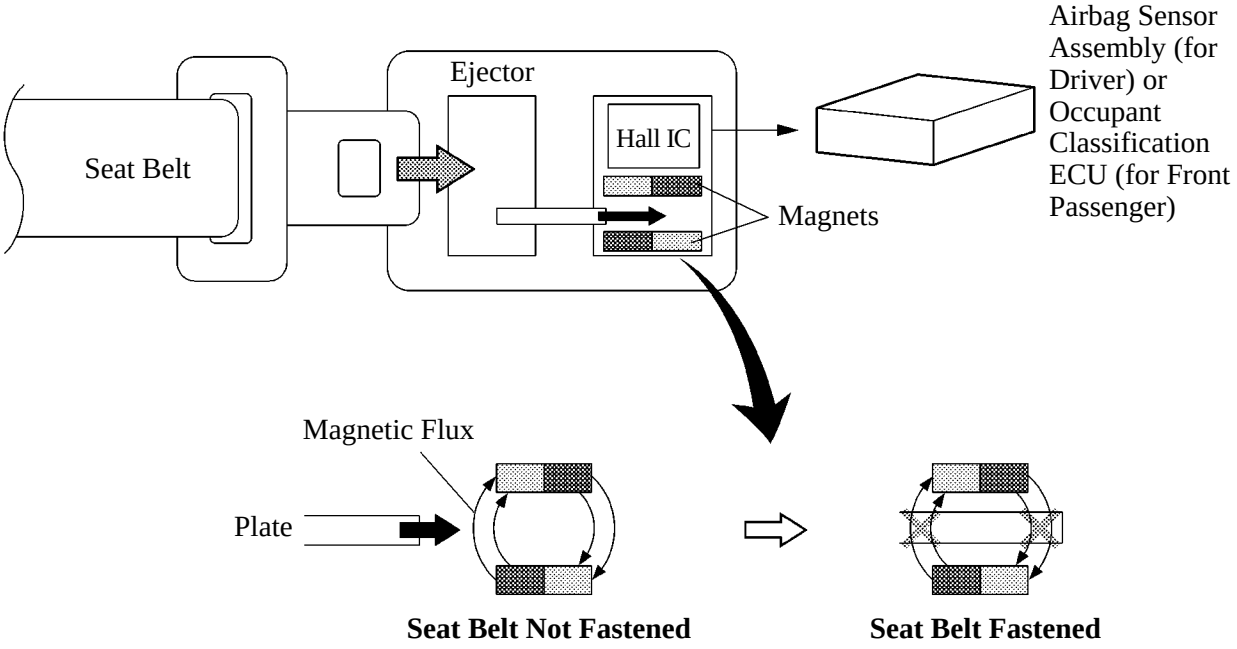

Downloaded from www.Manualslib.com manuals search engine

3. SRS Driver and Front Passenger Airbags

SRS driver and front passenger airbags contain two sets of initiators and propellants. The airbag sensor assembly helps optimize the airbag inflation speed by controlling the inflation timing of these initiators.

4. Front Airbag Sensor

Front airbag sensor uses an electrical type deceleration sensor. Based on the deceleration of the vehicle during a frontal collision, distortion is created in the sensor and converted into an electrical signal. Accordingly, the extent of the initial collision can be accurately detected.

5. SRS Knee Airbag

The knee airbag deploys simultaneously with the front airbag in a frontal collision. With the deployment of the knee airbag, the driver's lower body is restricted, thus enhancing the excellent passenger protection provided by the seat belt and front airbag.

Downloaded from www.Manualslib.com manuals search engine

■AIRBAG FOR SIDE/REAR OF SIDE COLLISION

1. General

- With the airbag for side collisions, if the side & curtain shield airbag sensor detects an impact, the airbag sensor assembly causes the front side and curtain shield airbags to be deployed simultaneously.
- With the airbag for rear of side collisions, if the curtain shield airbag sensor detects an impact, the airbag sensor assembly causes the curtain shield airbag to be deployed.

▶ System Operation ◀

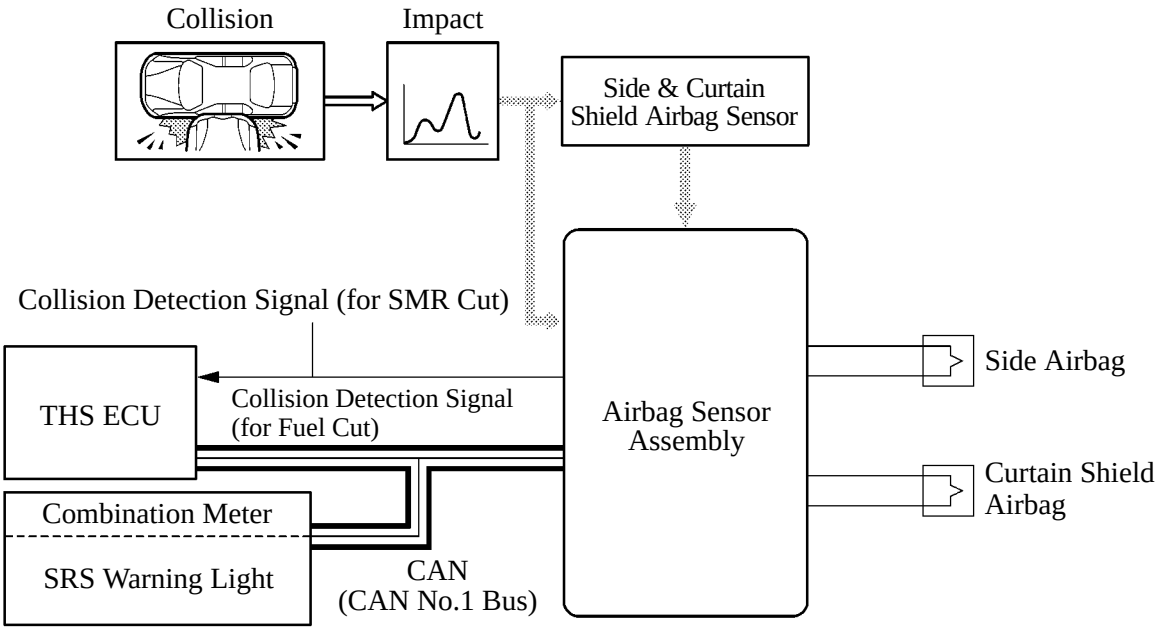

02HBE70TE

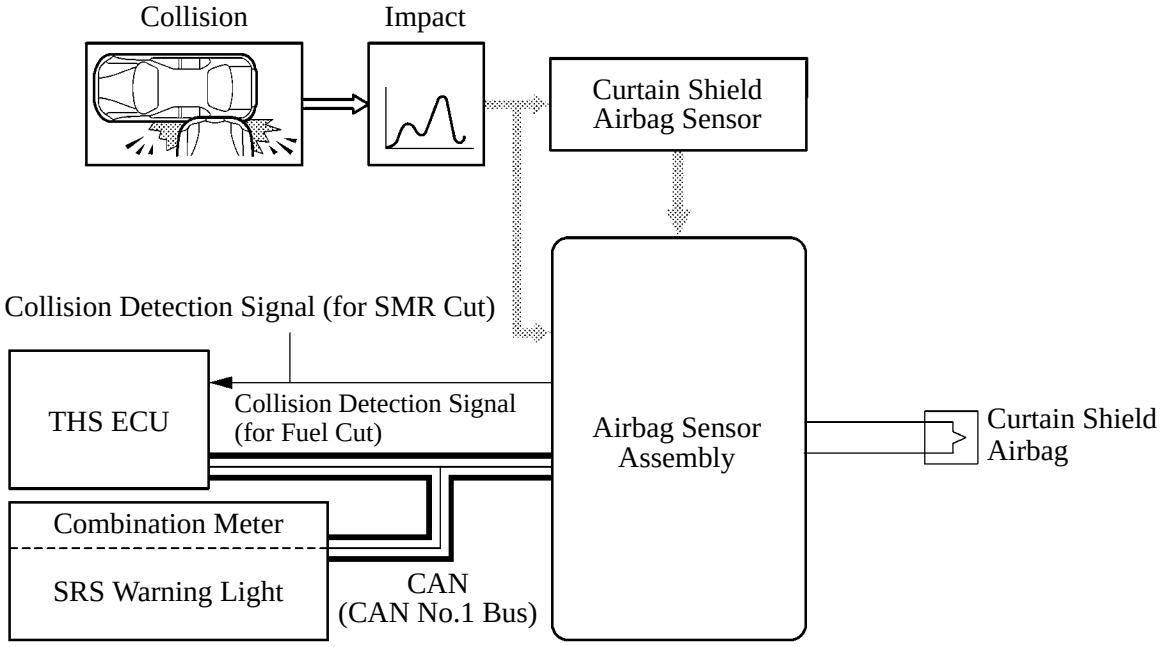

02HBE71TE

Downloaded from www.Manualslib.com manuals search engine

2. SRS Side Airbag

SRS side airbags are installed in the backs of the driver seat and the front passenger seat. The SRS airbag is a one-piece design, consisting of an inflator, a bag, and a cover.

3. SRS Curtain Shield Airbag

SRS curtain shield airbags are located in the areas that extend from the driver's and front passenger's front pillars to the rear pillars in the rear seat areas. Each SRS airbag is a one-piece design, consisting of an inflator, a bag, and a cover.

4. Side & Curtain Shield and Curtain Shield Airbag Sensors

Side & curtain shield airbag sensor uses an electrical type deceleration sensor. Based on the deceleration of the vehicle during a side or rear of side collision, distortion is created in the sensor and converted into an electrical signal. Accordingly, the extent of the initial collision can be accurately detected.

Downloaded from www.Manualslib.com manuals search engine

■FRONT PASSENGER OCCUPANT CLASSIFICATION SYSTEM

1. General

The front passenger occupant classification system judges whether the front passenger seat is occupied by an adult or child (with child seat) or is unoccupied, in accordance with the load that is applied to the front passenger seat and whether the seat belt is buckled. Thus, it restricts the deployment of the front passenger airbag, front passenger side airbag, and the front passenger seat belt pretensioner. In addition, the system informs the driver of the result of the judgment through the use of the AIRBAG ON/OFF indicator lights.

- This system consists of the occupant classification ECU, four occupant classification sensors, AIRBAG ON/OFF indicator lights, seat belt buckle switch, and airbag sensor assembly.

▶ System Diagram ◀

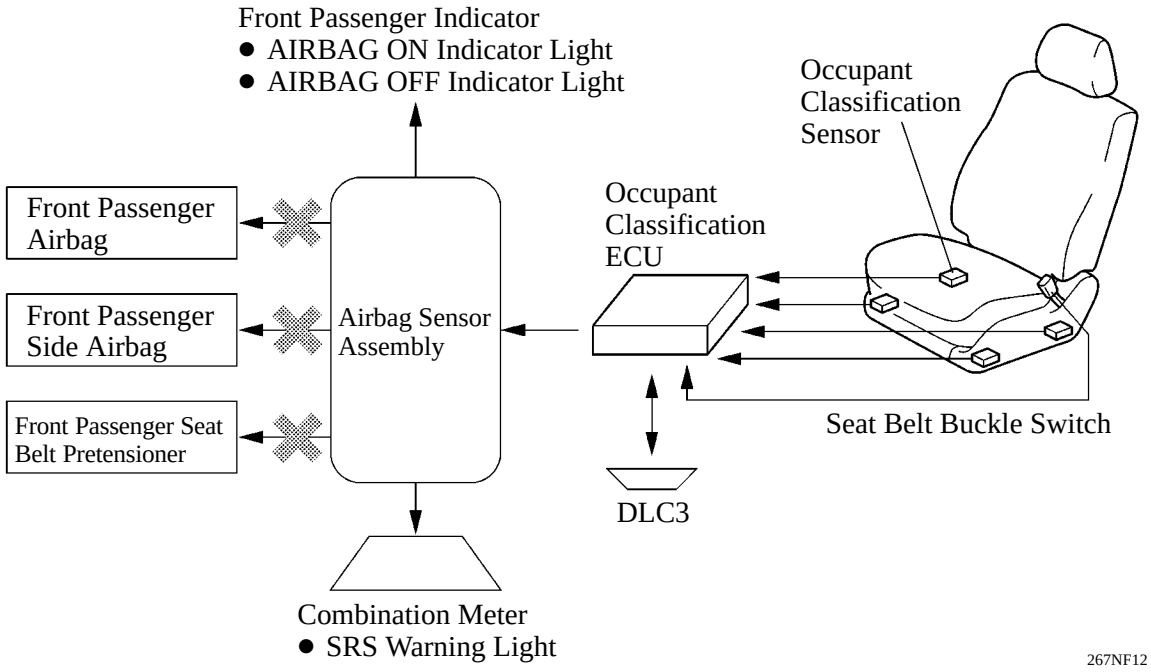

Service Tip

- When installing items to the front passenger seat or removing/installing the front passenger seat, connect the hand-held tester and be sure to perform a system check and perform a zero-point calibration of the sensor load value.
- If performing maintenance due to the SRS warning light being on constantly or due to a collision, in addition to the above item, check that the hand-held tester display value indicates within the range of 30 kg (66 lb) +/- 3 kg (6.6 lb) when a 30 kg (66 lb) weight is placed on the front passenger seat.

For details, see the 2007 Camry Hybrid Vehicle Repair Manual (Pub. No. RM02H0U).

Downloaded from www.Manualslib.com manuals search engine

2. Wiring Diagram

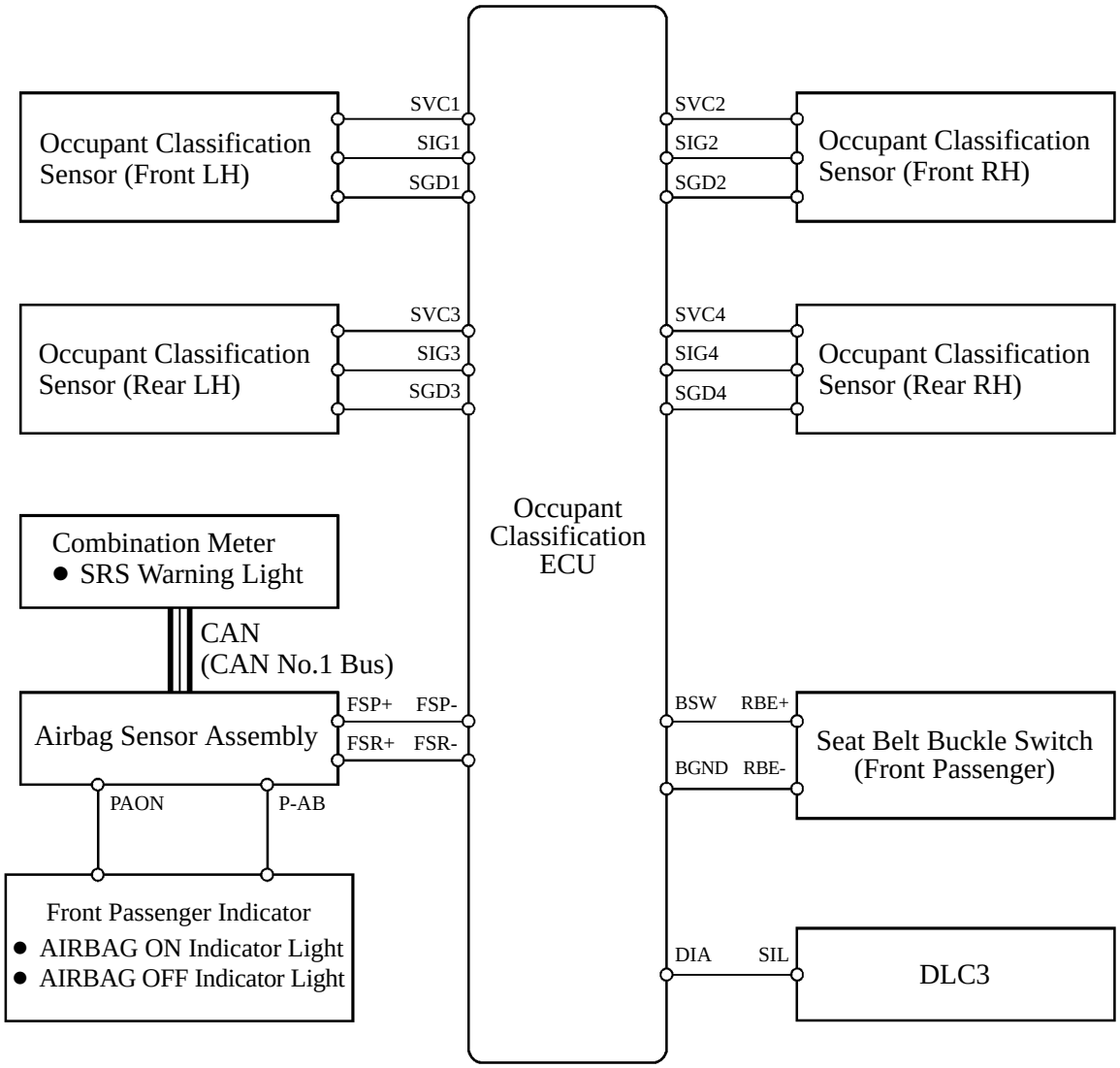

025BE115P

Downloaded from www.Manualslib.com manuals search engine

3. Occupant Classification Sensor

The occupant classification sensors are installed on four brackets connecting the seat rail and the seat frame. The resistance values of these sensors, which vary in accordance with the distortion that acts on the brackets, are output to the occupant classification ECU.

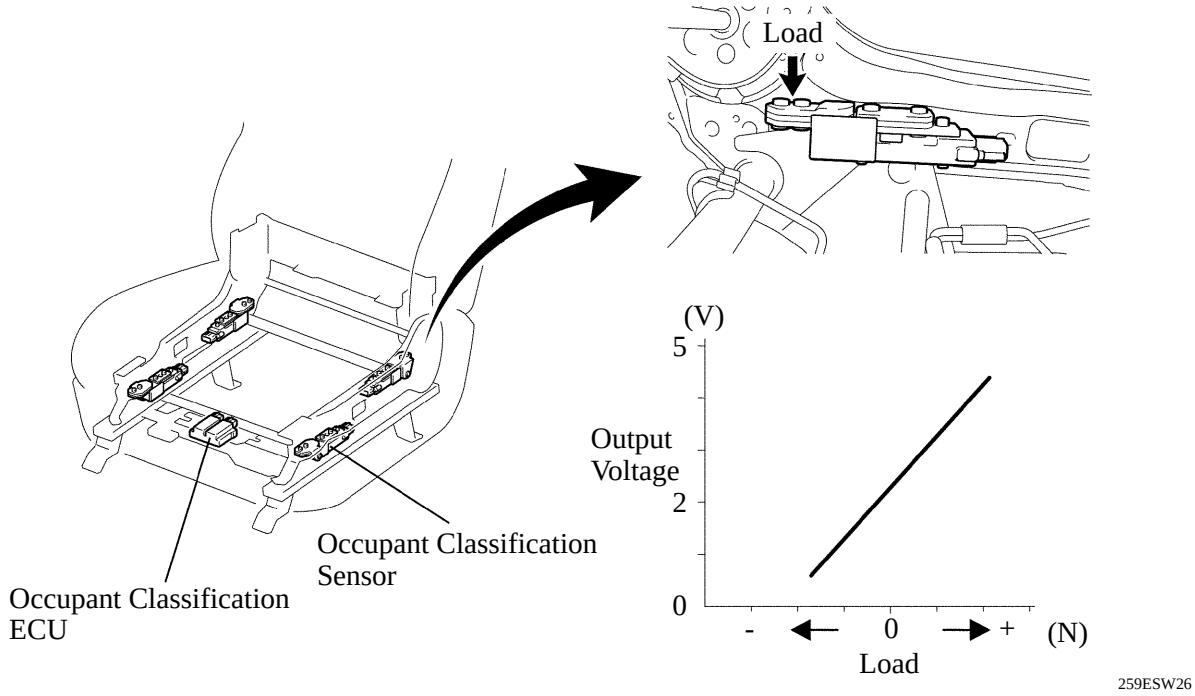

Relation between Output Voltage and Load

Downloaded from www.Manualslib.com manuals search engine

4. System Operation

General

This system makes the following judgments: unoccupied judgment, child seat judgment, child judgment, and adult judgment. In addition, it performs an initial check to check the circuit of the AIRBAG ON/OFF indicator lights when the power switch is IG-ON.

- The occupant classification ECU constantly monitors the weight of the front passenger seat, and makes a judgment in accordance with the signals from the occupant classification sensor and the state of the seat belt buckle switch, regardless of the position of the power switch.
- The occupant classification ECU contains criteria value A to judge whether the seat is being occupied by a child or a child seat in accordance with the signals from the four occupant classification sensors and seat belt buckle switch, and criteria value B to judge whether the occupant is an adult or child (with child seat).
- The occupant classification ECU makes an occupied or unoccupied judgment in accordance with the signals from the seat belt buckle switch.

Unoccupied Judgment

- The occupant classification ECU makes an unoccupied judgment when the judgment value is lower than criteria value A and the seat belt buckle switch is OFF.
- If the power switch is turned IG-ON in this state, the system performs an initial check, and does not illuminate the AIRBAG ON/OFF indicator lights. Then, the system prohibits the deployment of the front passenger airbag, front passenger side airbag, and the front passenger seat belt pretensioner, and does not blink the seat belt reminder light.

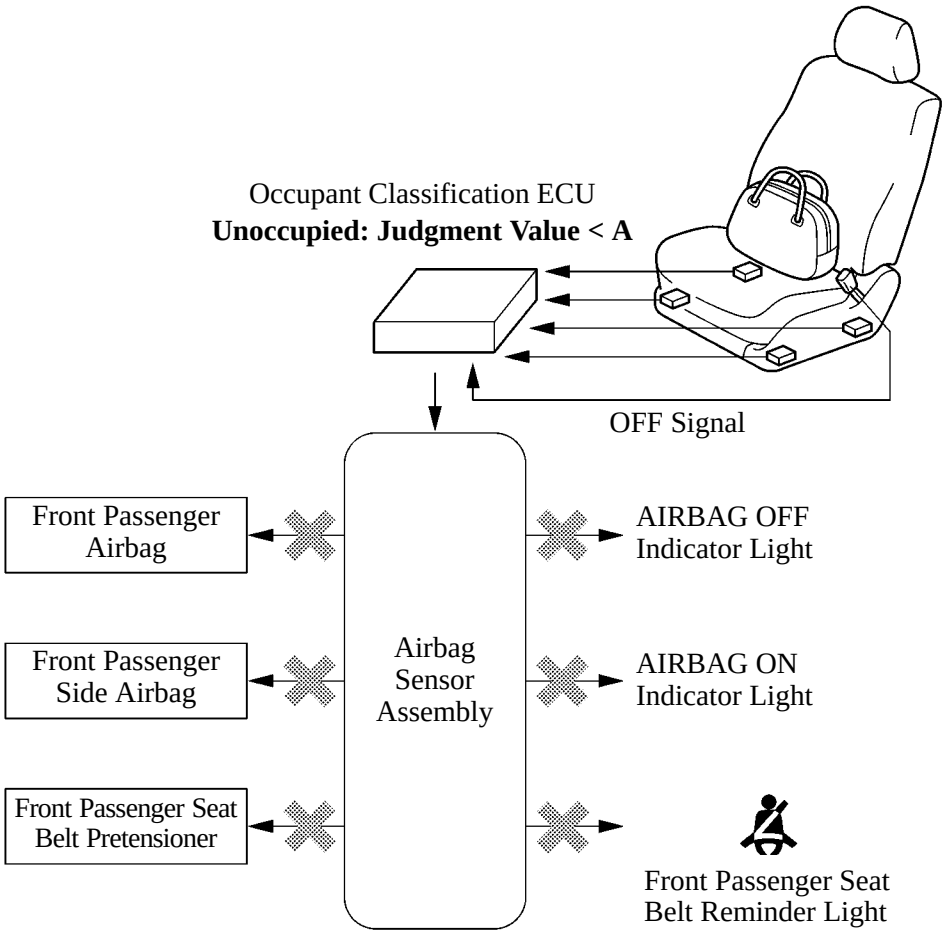

D13N55

Downloaded from www.Manualslib.com manuals search engine

Child Seat or Child Judgment

- If the judgment value is lower than criteria value B and the seat belt buckle switch is ON, the occupant classification ECU judges that a child seat is installed.
- If the judgment value is higher than criteria value A, but lower than criteria value B, and the seat belt buckle switch is OFF, the occupant classification ECU judges that the seat is being occupied by a child.
- When the power switch is turned IG-ON under these conditions, the system performs an initial check and illuminates the AIRBAG OFF indicator light to indicate that the front passenger airbag and the front passenger side airbag have been deactivated.

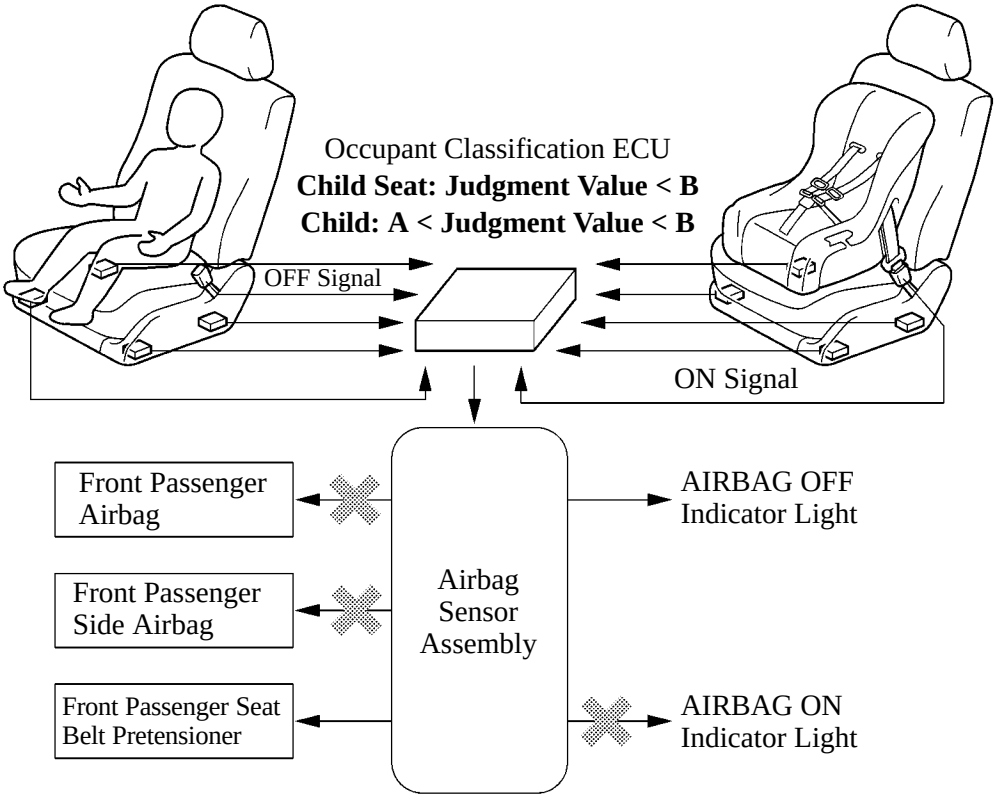

- After the occupant classification ECU judges that child seat is installed, the AIRBAG OFF indicator light does not go off unless the seat belt buckle switch is turned OFF.

Downloaded from www.Manualslib.com manuals search engine

Adult Judgment

- When the judgment value is higher than criteria value B, the occupant classification ECU judges that the seat is being occupied by an adult.
- If the power switch is turned IG-ON in this state, the system performs an initial check and illuminates the AIRBAG ON indicator light, indicating that the front passenger airbag and the front passenger side airbag are active.

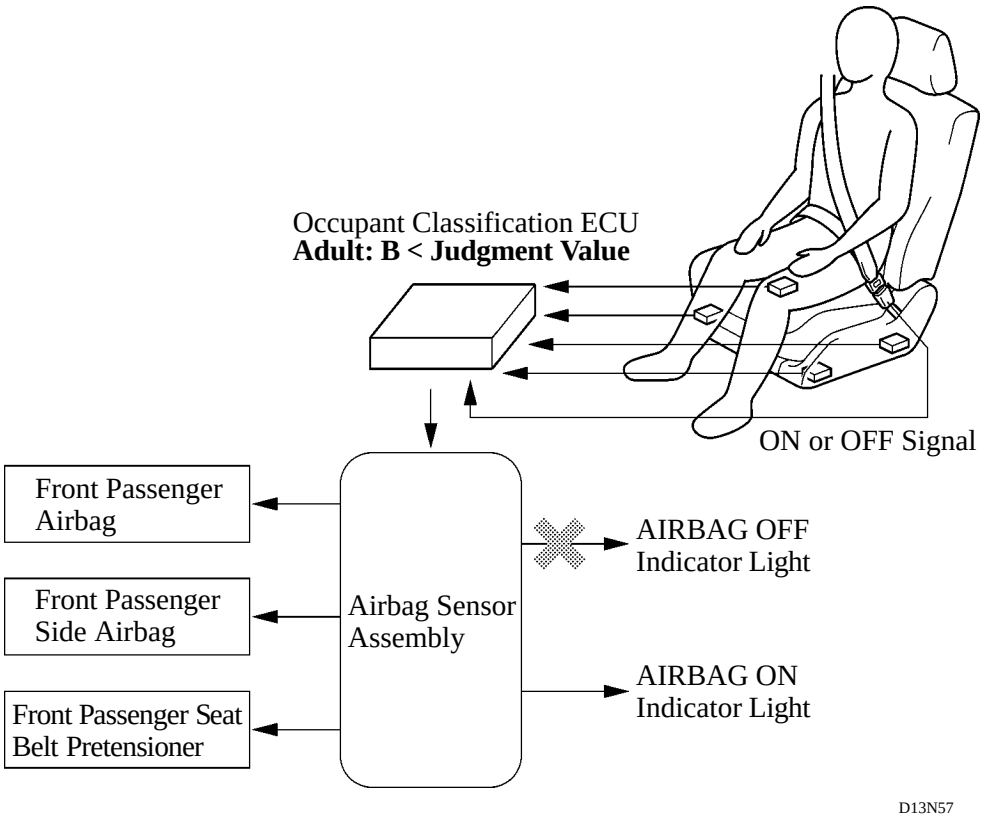

- After the occupant classification ECU judges that the occupant is as adult, and if the judgment value is determined as criteria value B or less according to occupant load movement, the ECU continues adult judgment for approximately ten seconds before switching the child judgment.

Downloaded from www.Manualslib.com manuals search engine

Initial Check

After the power switch is tuned IG-ON, the occupant classification ECU lights up the AIRBAG ON/OFF indicator lights via airbag sensor assembly based on the timing chart below in order to check the indicator light circuits.

▶ Timing Chart ◀

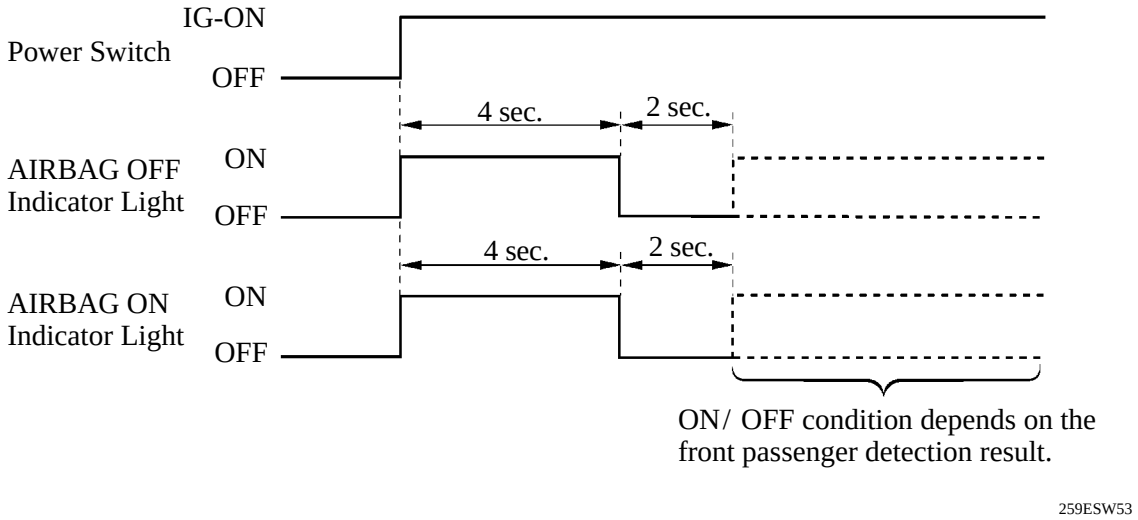

Downloaded from www.Manualslib.com manuals search engine

5. Precaution for Front Passenger Occupant Classification System Operation

To avoid potential death or serious injury when the front passenger occupant classification system does not detect the conditions correctly, observe the following.

- Wear the seat belt properly.
- Make sure the front passenger's seat belt tab has not been left inserted into the buckle before someone sits in the front passenger seat.
- Make sure the AIRBAG ON indicator light is illuminated when using the seat belt extender for the front passenger seat. If the AIRBAG OFF indicator light is illuminated, disconnect the extender tongue from the seat belt buckle, then reconnect the seat belt. Reconnect the seat belt extender after making sure the AIRBAG ON indicator light is illuminated. If you use the seat belt extender while the AIRBAG OFF indicator light is illuminated, the front passenger airbag and side airbag on the front passenger side may not activate correctly, which could cause death or serious injury in the event of collision.
- Do not put a heavy load in the front passenger seatback pocket or attach a seatback table to the front passenger seat seatback.
- Do not put weight on the front passenger seat by putting your hands or feet on the front passenger seat seatback from the rear passenger seat.
- Do not let a rear passenger lift the front passenger seat with their feet or press on the seatback with their legs.
- Do not put objects under the front passenger seat.
- Do not recline the front passenger seat seatback so far that it touches a rear seat. This may cause the AIRBAG OFF indicator light to be illuminated, which indicates that the passenger's airbags will not deploy in the event of a severe accident. If the seatback touches the rear seat, return the seatback to a position where it does not touch the rear seat.
  Keep the front passenger seatback as upright as possible when the vehicle is moving. Reclining the seatback excessively may lessen the effectiveness of the seat belt system.
- Make sure the AIRBAG ON indicator light may be illuminated when an adult sits in the front passenger seat. If the AIRBAG OFF indicator light is illuminated, ask the passenger to sit properly with back upright and against the seat, with legs comfortably extended and wear the seat belt correctly. Nonetheless, if the AIRBAG OFF indicator light remains illuminated, let the passenger sit in the rear seat. When it is unavoidable to sit in the front passenger seat, ask the passenger to move the seat as far back as possible, remain properly seated.
- When it is unavoidable to install the forward-facing child restraint system on the front passenger seat, install the child restraint system on the front passenger seat in the proper order.
- Do not kick the front passenger seat or subject it to severe impact. Otherwise, the SRS warning light may come on to indicate a malfunction of the detection system.
- Child restraint systems installed on the rear seat should not contact the front seatbacks.

Downloaded from www.Manualslib.com manuals search engine

■IMPROPER CONNECTION PREVENTION LOCK MECHANISM

- This improper connection prevention lock mechanism consists of the airbag sensor assembly and the holder.
- The airbag sensor assembly has a connector lock pin.
- The holder has a lever with a lock groove. The holder and the connectors are locked via a retainer and a lance.

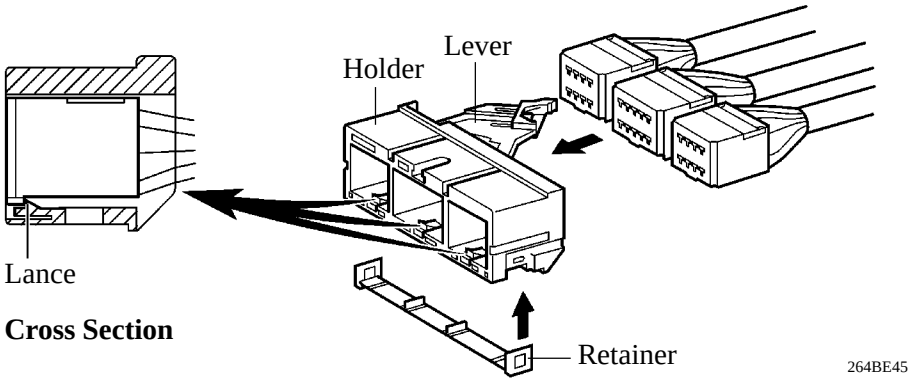

- When connecting the holder and connectors to the airbag sensor assembly, the lever is pushed into position end by rotating it around the axis of the connector lock pin in order to lock the holder securely.

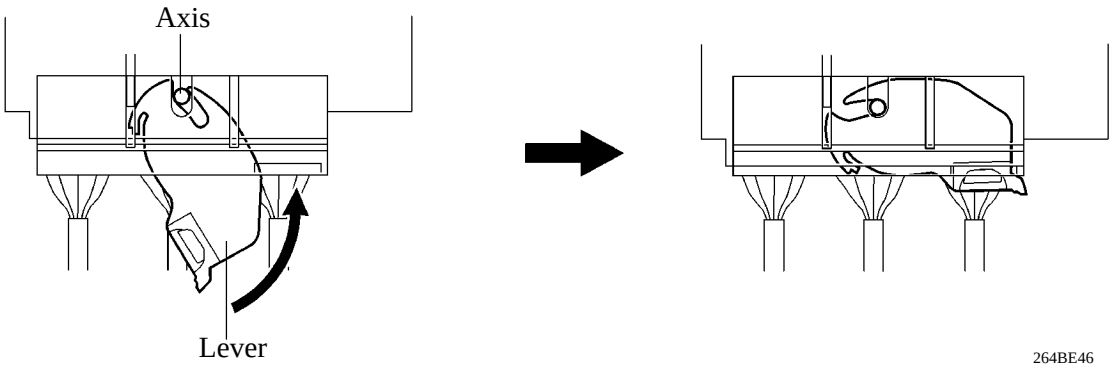

■AIRBAG SENSOR ASSEMBLY

- It reaches a deploy judgment to deploy the dual stage driver's and front passenger's airbags, driver's knee airbag, and pretensioners based on the signals received from the front airbag sensor and the airbag sensor assembly. In addition, it can reach a deploy judgment to deploy the SRS side airbags and SRS curtain shield airbags based on signals received from the side & curtain shield airbag sensors and curtain shield airbag sensors. Furthermore, it is equipped with a diagnosis function to perform self-diagnosis in case of system malfunctions.
- Each signal is transmitted as follows:

Target ECU	Signal	Communication path
THS ECU	Fuel Cut Signal	CAN communication circuit
	SMR Cut Signal	Direct Circuit
Combination Meter	SRS Warning Light ON Demand Signal Driver Seat Belt Remainder Light ON Demand Signal	CAN communication circuit

Downloaded from www.Manualslib.com manuals search engine

■EDR (EVENT DATA RECORDER)

The airbag sensor assembly monitors and control certain aspects of the vehicle.
These computers assist in driving and maintaining optimal vehicle performance.
Besides storing data useful for troubleshooting, there is a system to record data in a crash or a near car crash event.
This is called the Event Data Recorder (EDR).
The airbag sensor assembly contains the EDR.
In a crash or a near car crash event, this device may record some or all of the following information:

- Engine speed
- Whether the brake pedal was applied or not
- Vehicle speed
- To what extent the accelerator pedal was depressed
- Position of the transmission selector lever
- Whether the driver and front passenger wore seat belts or not
- Driver's seat position
- SRS airbag deployment data
- SRS airbag system diagnostic data

The information above is intended to be used for the purpose of improving vehicle safety performance.
Unlike general data recorders, the EDR does not record sound data such as conversation between passengers.
Toyota will not disclose the data recorded in an EDR to a third party except when:

- An agreement from the vehicle's owner (or the leasing company for a leased vehicle) is obtained
- Officially requested by the police or other authorities
- Used as a defense for Toyota in a law suit
- Ordered by the court

However, if necessary Toyota will:

- Use the data for research on Toyota vehicle safety performance
- Disclose the data to a third party for research purposes without disclosing details of the vehicle owner, and only when it is deemed necessary
- Disclose summarized data cleared of vehicle identification information to a non-Toyota organization for research purposes

■DIAGNOSIS

If the airbag sensor assembly detects a malfunction in the SRS airbag system, the airbag sensor assembly stores the malfunction data in memory, in addition to illuminating the SRS warning light.

- There are 2 types of DTC for the SRS airbag system: 5-digit and 2-digit.
- The 5-digit DTC can be read by connecting a hand-held tester to DLC3.
- The 2-digit DTC can be read by connecting the SST (09843-18040) to the Tc and CG terminals of the DLC3 and reading the blinking of the SRS warning light.
- If the SRS airbags deploy, the airbag sensor assembly will turn ON the SRS warning light. However, differing from the ordinary diagnosis function, a DTC will not be memorized. The SRS warning light can be turned OFF only by replacing the airbag sensor assembly with a new one.
- For details, refer to see the 2007 Camry Hybrid Vehicle Repair Manual (RM02H0U).

Downloaded from www.Manualslib.com manuals search engine

SEAT BELT REMINDER SYSTEM

■DESCRIPTION

- If a seat belt is not fastened, this system flashes the seat belt reminder light or sounds the buzzer in the combination meter as a reminder.
- When the power switch is turned IG-ON, this system detects the condition of the seat belts based on the signals from the seat belt buckle switches (for the driver and front passenger) and the occupant classification sensors.

▶ System Diagram ◀

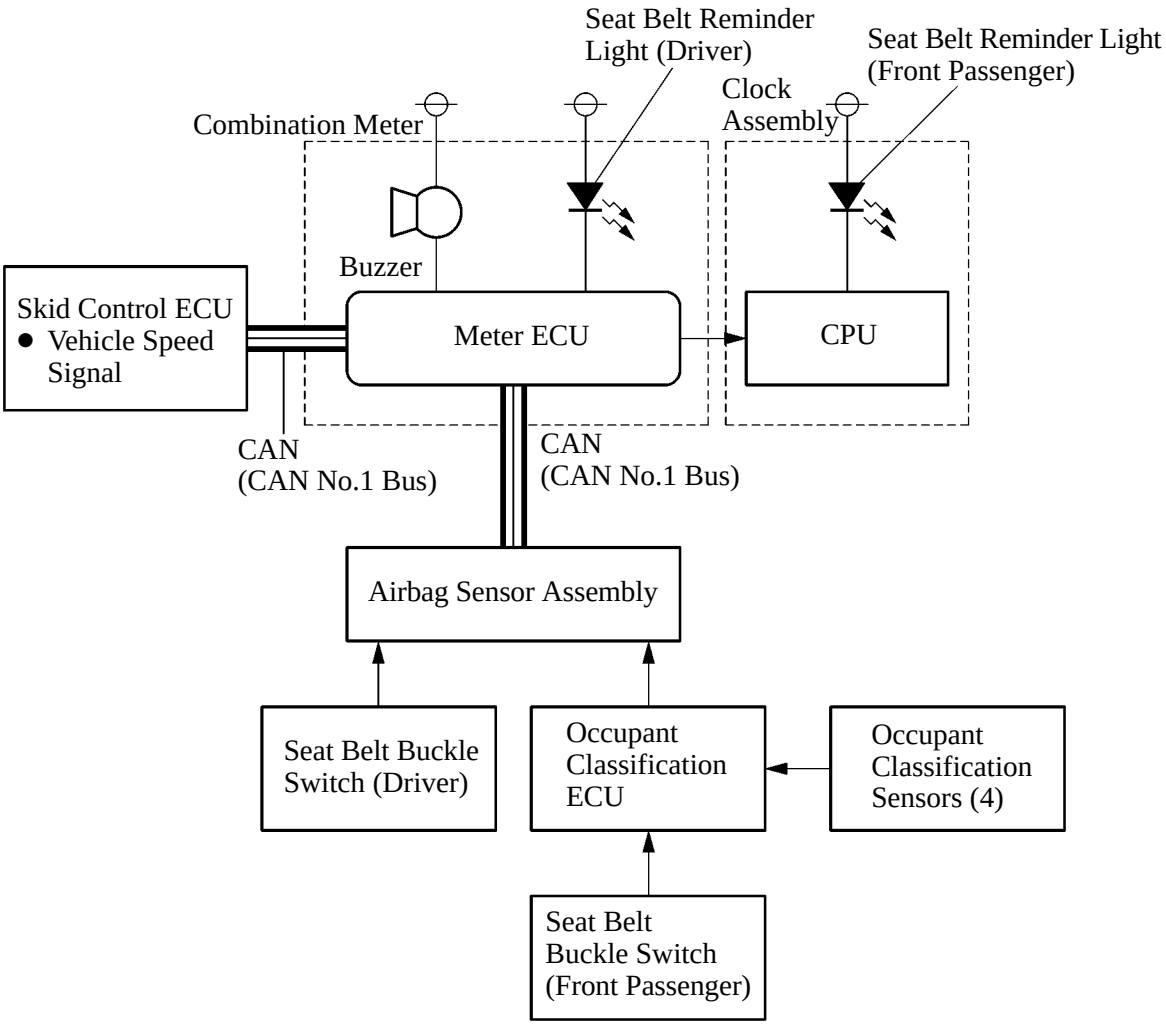

02HBE85TE

Downloaded from www.Manualslib.com manuals search engine

■ REMINDER METHOD

The timing chart of the buzzer and details of the reminder method are shown below.

▶ Timing Chart ◀

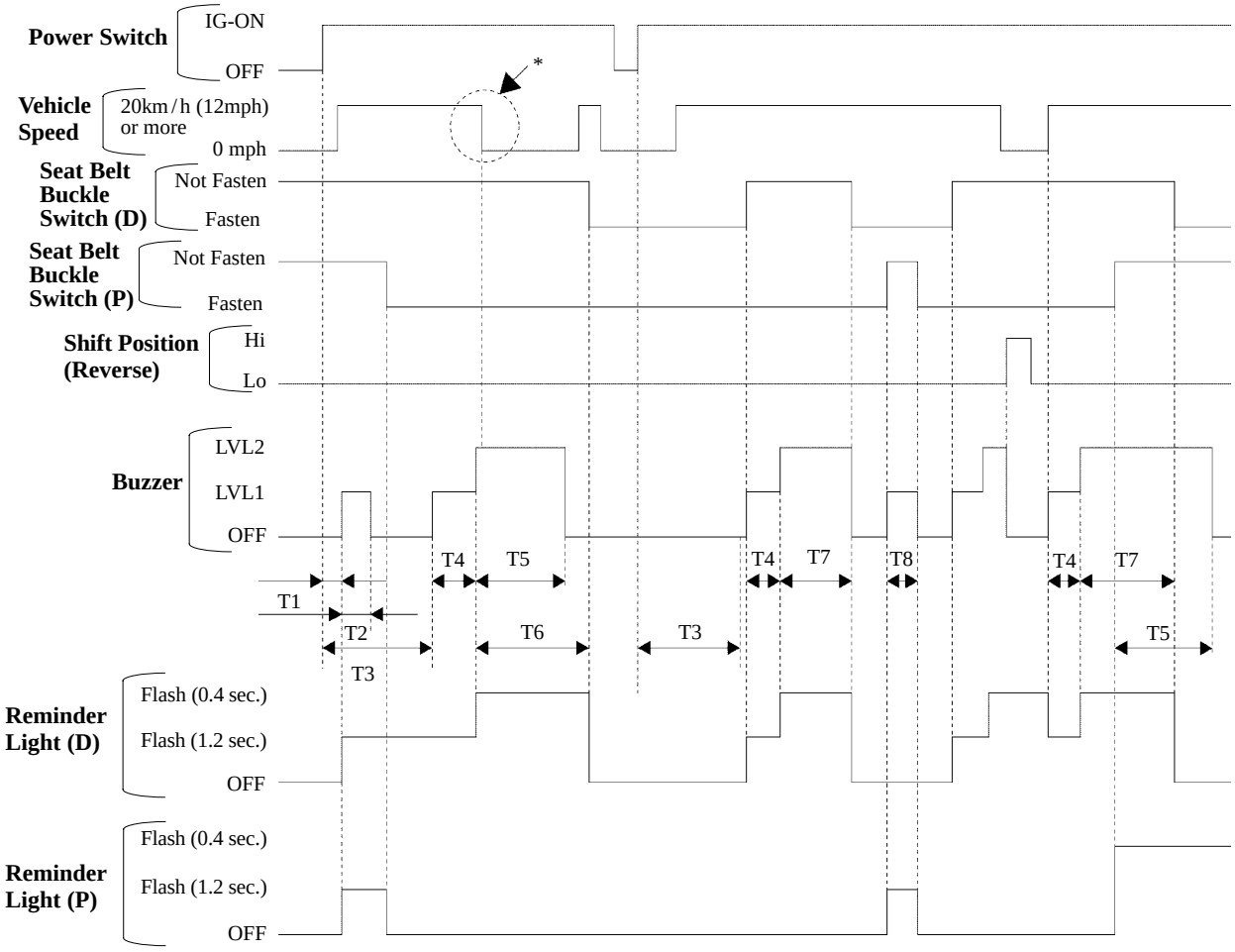

T1: About 1.8 sec.	T5: About 20 sec.
T2: About 1.2 sec. x 5	T6: About 20 sec. or more
T3: About 13.8 sec.	T7: About 20 sec. or less
T4: About 9.6 sec.	T8: About 9.6 sec. or less

*: If the vehicle speed drops below the setting level for seat belt warning after a buzzer begins to sound, the buzzer will continue to sound.

◆: The setting function can be changed using the customized body electronics system. For details, refer to Customized Body Electronics System section on page BE-11.

Downloaded from www.Manualslib.com manuals search engine

CRUISE CONTROL SYSTEM

■DESCRIPTION

- The cruise control system is standard equipment on all models.
- This system, which is controlled by the THS ECU that is integrated with the cruise control ECU, operates the vehicle through an optimal combination of the motive forces of the MG2 and the engine in accordance with the setting on the cruise control switch.

▶ System Diagram ◀

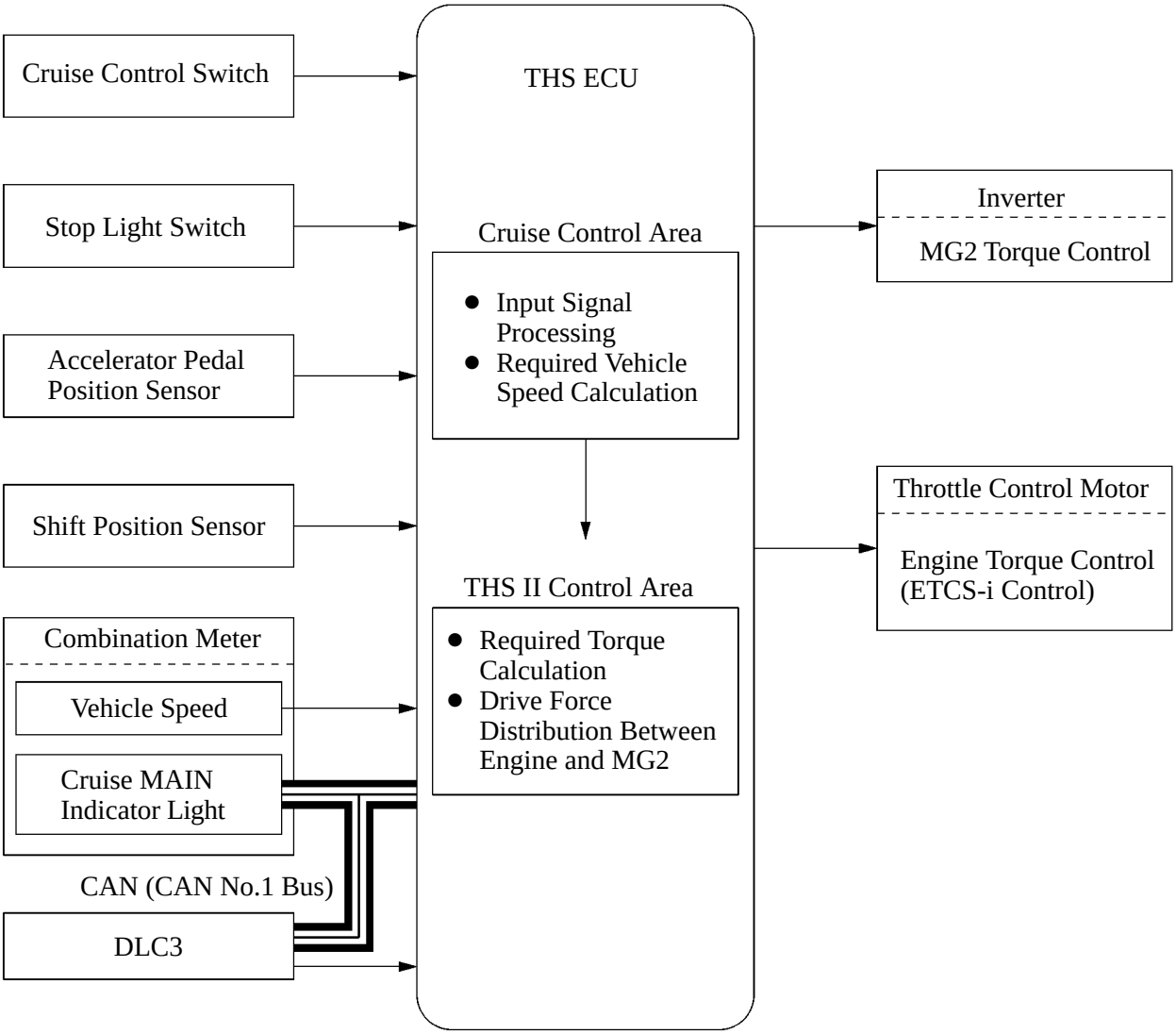

02HBE72Y

Downloaded from www.Manualslib.com manuals search engine

2. Layout of Main Components

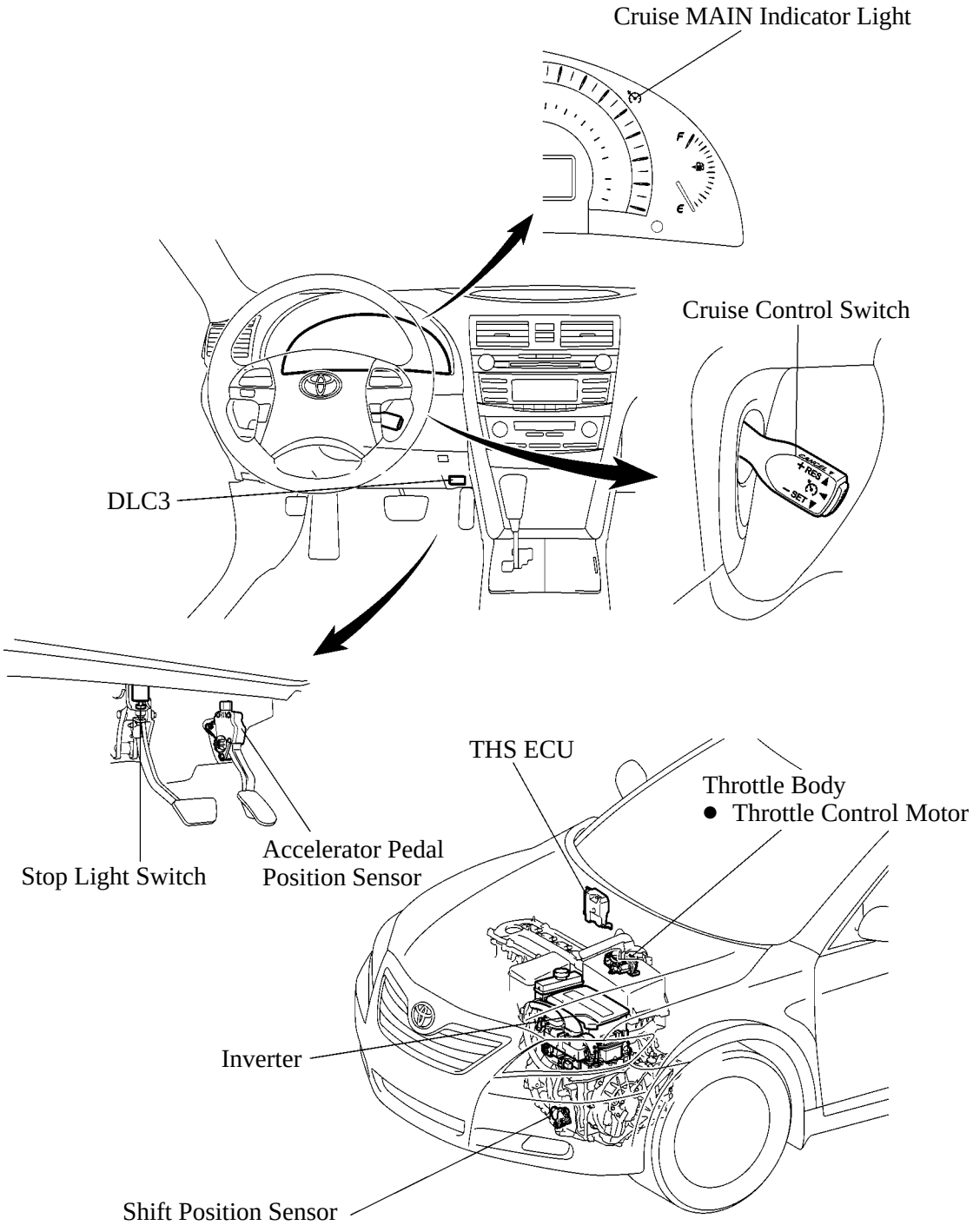

02HBE73TE

Downloaded from www.Manualslib.com manuals search engine

3. System Control

General

The cruise control has the following control.

Control	Outline
Constant Speed Control	The THS ECU compares the actual vehicle speed with the set speed, and regulates the drive force of the MG2 and the engine so that the actual vehicle speed and the set speed will become equal.
Set Control	While this system fulfils the following conditions, and the cruise control switch is pressed to the SET/- side and released when the ON-OFF button on the cruise control switch has been pressed to turn the system on, the THS ECU stores the vehicle speed and maintains the vehicle constantly at that speed. ● The vehicle is running at a vehicle speed of about 25 mph (40 km/h) or more. ● While the shift lever is in position D.
Low Speed Limit Control	The low speed limit is the lowest speed that cruise control can be set at and it is designed to be approx. 25 mph (40 km/h). The cruise control cannot be set below that speed. If the vehicle speed drops below that speed while running in the cruise control, the cruise control will be cancelled automatically. However the set speed in the memory is kept.
Deceleration Control	While the cruise control switch is held to the SET/- side, the vehicle speed and the set vehicle speed change as follows. ● The THS ECU regulates the drive force of the MG2 and the engine, and the vehicle speed decreases. ● The set vehicle speed changes to the speed that the vehicle is traveling at when the COAST switch is released.
Tap Down Control	When the cruise control switch is pushed momentarily (approx. 0.6 sec.) to the SET/- side, the vehicle speed and the vehicle setting speed change as follows. ● The vehicle will decelerate in increments of approx. 1 mph (1.6 km/h) for each time the switch was pressed. ● If the cruise control switch SET/- side is operated when the difference between the actual vehicle speed and the vehicle setting speed is greater than 3.1 mph (5 km/h), the vehicle setting speed is changed to the same as the actual vehicle speed when the switch is released. ● If the difference between the actual vehicle speed and the vehicle setting speed is less than 3.1 mph (5 km/h), the vehicle setting speed does not change even if the cruise control switch is operated.
Acceleration Control	When the cruise control switch is pushed to the RES/+ side and held, the vehicle speed and the vehicle setting speed change as follows. ● The THS ECU regulates the drive force of the MG2 and the engine, and the vehicle speed increases. ● The set vehicle speed changes to the speed as which the switch is releases.
Tap Up Control	When the cruise control switch is pushed momentarily (approx. 0.6 sec.) to the RES/+ side, the vehicle speed and the vehicle setting speed change as follows. ● The vehicle accelerates in increments of approx. 1 mph (1.6 km/h) for each time the switch was pressed. ● However, if the difference between the actual vehicle speed and the vehicle setting speed is greater than 3.1 mph (5 km/h), the vehicle setting speed does not change.
RES Switch Control	If cruise control is canceled for any reason other than a malfunction or main switch operation and vehicle speed is more than the low speed limit, the vehicle speed is returned to the speed before the cancellation of cruise operation by setting the cruise control switch to the RES/+ side. The cruise control mode can be resumed even if the vehicle speed drops below the low speed limit, because the speed in the memory is not cleared.

(Continued)

Downloaded from www.Manualslib.com manuals search engine

Control	Outline
Manual Cancel Control	If any of the following signals is sent to the THS ECU, the cruise control is cancelled accordingly. ● Stop light switch ON signal/Depress the brake pedal. ● CANCEL switch ON signal (cruise control switch moved to CANCEL side) ● Cruise control switch (ON-OFF button) OFF signal. ● Shift lever is shifted to any position other than D.
Automatic Cancel Control	When any of the following conditions occur during cruise control operation, the speed that is set in the memory is cleared and the cruise control is cancelled. ● Stop light switch open or short circuit ● The vehicle speed signal is not input for a predetermined period of time. ● THS II parts malfunction Furthermore, the cruise MAIN indicator light will blink until the ON-OFF button on the cruise control switch is used to turn the system off, and the operation of the cruise control will be disabled until the ON-OFF button is turned ON again.
	When any of the following conditions occur during cruise control driving, the speed that is set in the memory is cleared and the cruise control is cancelled. ● Stop light switch input signal is abnormal. ● Cruise control switch input signal is abnormal. Furthermore, the cruise MAIN indicator light will blink until the ON-OFF button on the cruise control switch is used to turn the system off, and the operation of the cruise control will be disabled until the power source is turned IG-ON again.
	When any of the following conditions occur during cruise control driving, the speed that is set in the memory is cleared and the cruise control is cancelled. ● Vehicle speed decreases by 10 mph (16 km/h) or more below the speed at which the cruise control was set.
	When any of the following conditions occur during cruise control driving, the cruise control is cancelled. ● Vehicle speed is below the low speed limit (approx. 25 mph [40 km/h]) or less. ● During VSC operation.
Diagnosis	When the THS ECU does not receive a vehicle speed signal for a predetermined period of time during cruising, or when cruise control is cancelled (automatic cancel) due to a malfunction of the cruise control, stop light switch or vehicle speed signal, the THS ECU immediately blinks the cruise MAIN indicator light due to the malfunction. The contents relating to the malfunction will be stored in the THS ECU.

Downloaded from www.Manualslib.com manuals search engine

Diagnosis

If a malfunction occurs in the cruise control system, during cruise control operation, the THS ECU actuates the automatic cancel control and blinks the cruise MAIN indicator light to inform the driver of a malfunction. At this time, the THS ECU memorizes the malfunction in the form of 5-digit DTC (Diagnostic Trouble Code). The 5-digit DTC can be read by connecting a hand-held tester to the DLC3.

Service Tip

When using a hand-held tester, a dedicated adapter [CAN VIM (Vehicle Interface Module)] must be connected between the DLC3 and the hand-held tester. For details, see the 2007 Camry Hybrid Vehicle Repair Manual (Pub. No. RM02H0U).

Downloaded from www.Manualslib.com manuals search engine

REAR VIEW MIRROR

■DESCRIPTION

The rear view mirrors have the following functions:

Mirror	Function	Equipment
Inside Rear View Mirror	Automatic glare-resistant EC (Electrochromic) mirror & compass display	Standard
Outside Rear View Mirror	Electric remote control mirror	Standard
	Electric remote control mirror & mirror heater (See page BE-159)	Option

Downloaded from www.Manualslib.com manuals search engine

■COMPASS DISPLAY

A sensor that detects the earth's magnetic field is built inside the inside rear view mirror. This sensor is influenced less by the magnetization of the vehicle.

- The compass indicates north as 0° and the forward direction of the vehicle using 8 azimuths. (N, NE, E, SE, S, SW, W, and NW)
- Press the Mirror switch for 3 to 6 seconds to indicate the compass.

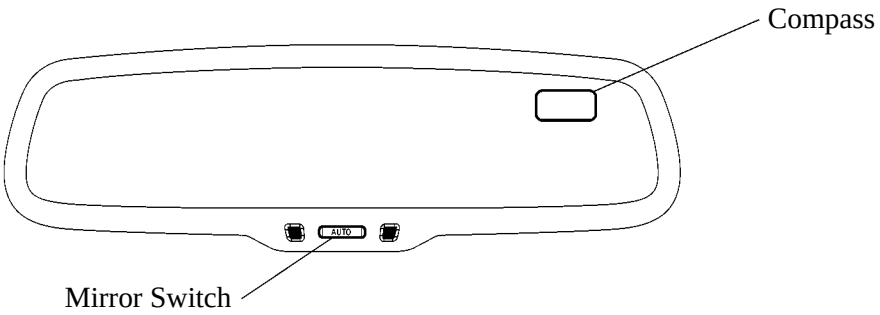

025BE172TE

Service Tip

To ensure an accurate compass reading, it is necessary to perform a magnetic variation (declination) adjustment in order to set the number that identifies the region that the vehicle will be used in. The numbers that identify the regions are shown in the illustration below.

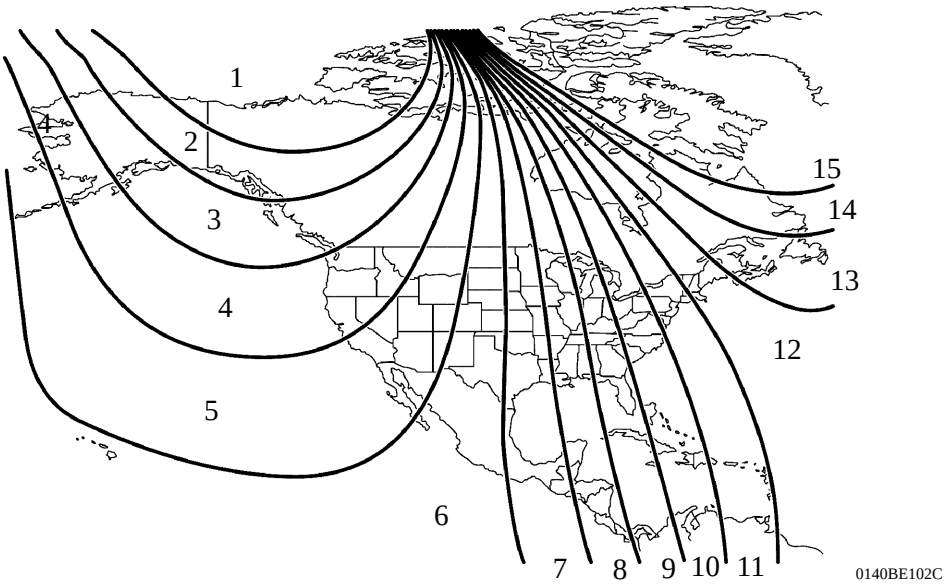

0140BE102C

As the compass system needs to memorize the vehicle's marked magnetic field, it is necessary to perform calibration for each vehicle. Once calibration has been completed, it is not necessary to perform calibration unless a sudden magnetic field change occurs. In case of occurrence of a sudden magnetic field change, C will be displayed in the compass display and it will be necessary to perform calibration again.
For details, see the 2007 Camry Hybrid Vehicle Repair Manual (Pub. No. RM02H0U).

Downloaded from www.Manualslib.com manuals search engine

■ AUTOMATIC GLARE-RESISTANT EC MIRROR

1. General

During nighttime driving, if a large difference in intensity exists between the surrounding light and the light reflected off the inside rear view mirror from the headlights behind, an automatic glare-resistant EC (Electrochromic) mirror automatically reduces the reflection rate of the mirror and thus dampens the glare from the mirror.

- This system uses 2 sensors (surrounding light detection sensor, rear light detection sensor) that are present in the inside rear view mirror to detect the difference between the intensity of light in the environment, and the light that the inside rear view mirror receives from the rear of the vehicle.
- When the power switch is changed from OFF to IG-ON, this system defaults to AUTO mode.

▶ System Diagram ◀

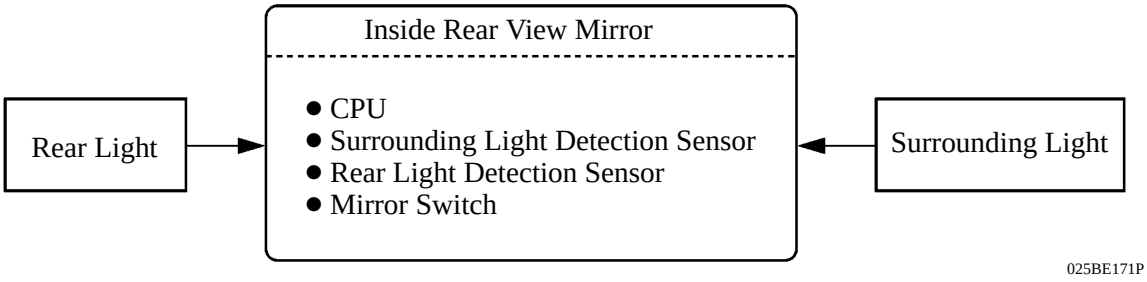

025BE171P

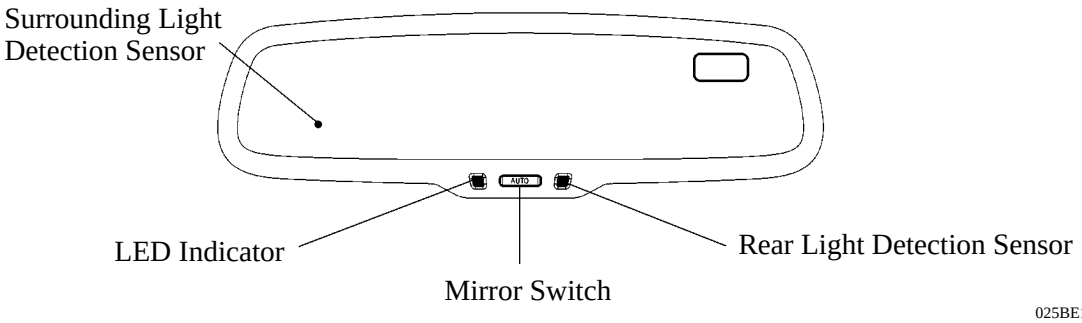

025BE172TE

2. Function of Components

Component	Function
Surrounding Light Detection Sensor	Detects the intensity of the light surrounding the vehicle.
Rear Light Detection Sensor	Detects the intensity of the light that strikes the inside rear view mirror from behind the vehicle.
LED	Turns on to inform the driver when AUTO mode is operating.
Mirror Switch	Mirror modes can be selected and compass setting can be performed by pressing the Mirror switch for a given length of time as follows ● 0 ~ 3 seconds: AUTO mode/AUTO OFF mode ● 3 ~ 6 seconds: Compass display/compass clear ● 6 ~ 9 seconds: Compass region setting ● 9 seconds or more: Compass system calibration
EC Mirror Cell	Varies the refection rate of the mirror using the function of EC element.
CPU	Controls the reflections rate in accordance with the signals from the 2 sensors.

Downloaded from www.Manualslib.com manuals search engine

3. EC Mirror Cell

The gel type EC elements are placed between a layer of transparent conductive coating, and a layer of conductive reflector surfaces, which are placed between 2 sheets of glasses. The EC elements have color coating characteristics. These characteristics are utilized to electronically very the mirrors reflection rate through the electro-chemical oxidation reduction reaction.

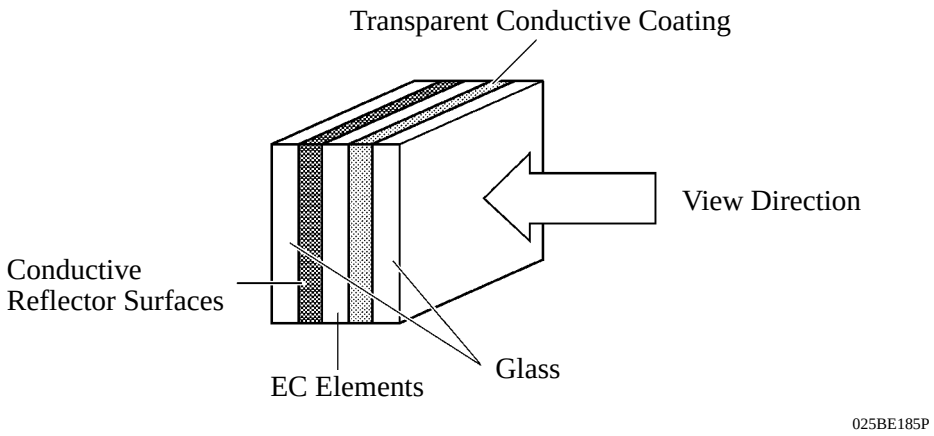

4. Reflection Rate Control

This CPU detects the surrounding light using its surrounding light detection sensor, the rear light using its rear light detection sensor, and determines whether it is day or night based on the intensity of the surrounding light. At the same time, the intensity of the glare from the rear is determined through the difference in intensity between the surrounding and rear light. In accordance with the intensity of the rear light, the reflection rate is varied steplessly.

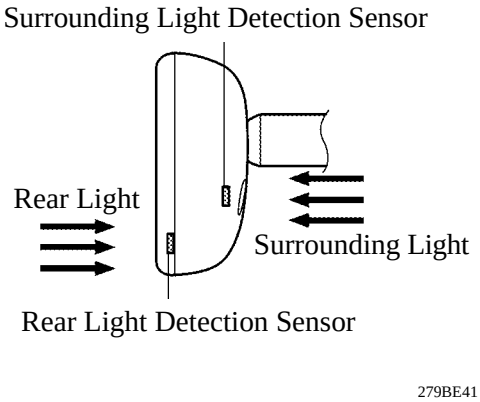

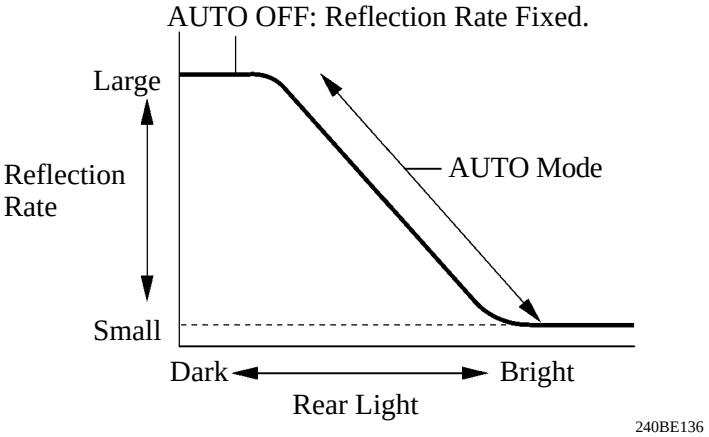

Downloaded from www.Manualslib.com manuals search engine

POWER SEAT SYSTEM

■DESCRIPTION

- A power seat system is used for the driver and front passenger seats on all models.
- The power seat system for the front seats has the functions:

○: Standard

Function		Equipment		Stroke
		Driver	Front Passenger	
(1)	Seat Slide	○	Option	260 (10.24) mm (in.)
(2)	Reclining	○	Option	48 degrees
(3)	Front Vertical	○	—	24 (0.94) mm (in.)
(4)	Rear Vertical (Lifter)	○	—	45 (1.77) mm (in.)
(5)	Lumbar Support	○	—	21 (0.80) mm (in.)

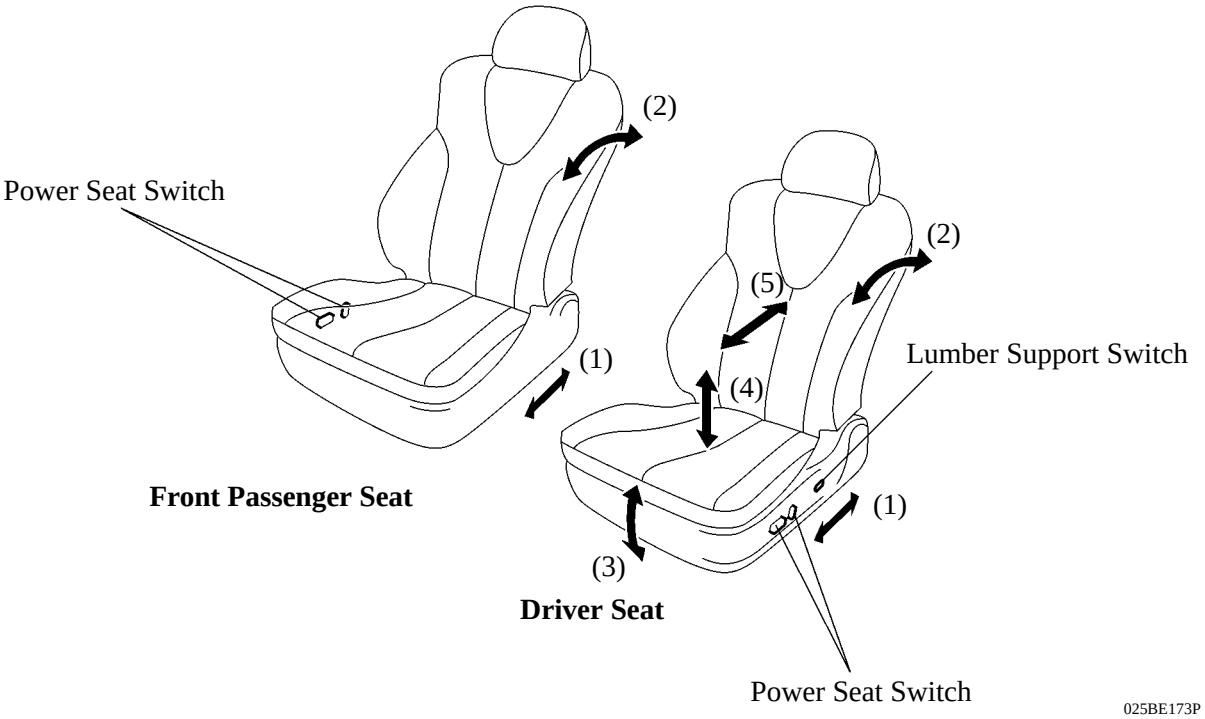

▶ System Diagram ◀

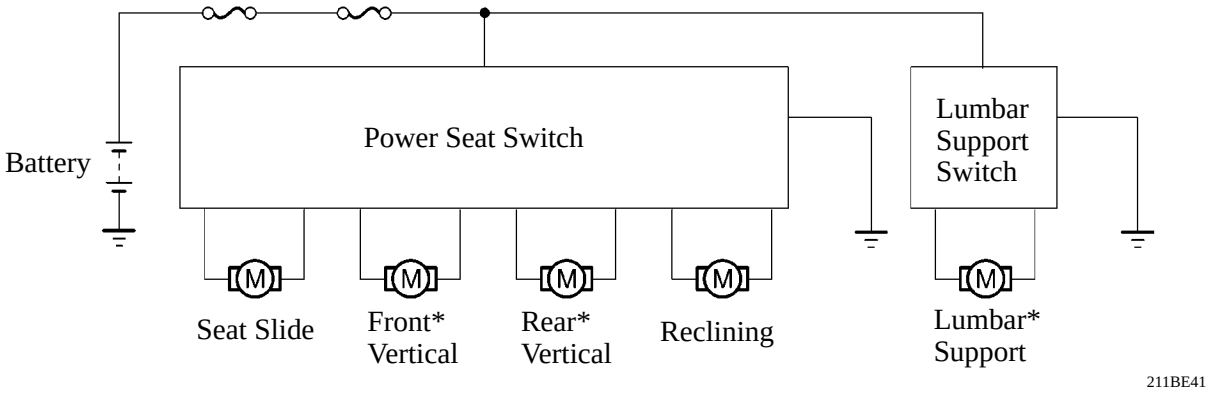

*: Only for driver seat

Downloaded from www.Manualslib.com manuals search engine

SEAT HEATER SYSTEM

■DESCRIPTION

- This system is optional equipment on the driver and front passenger seats of leather seat models.
- A seat heater switch with a built-in indicator light for checking the heater operation is provided.
- The output temperature of the seat heater is controlled by thermostat that are enclosed in the cushion.

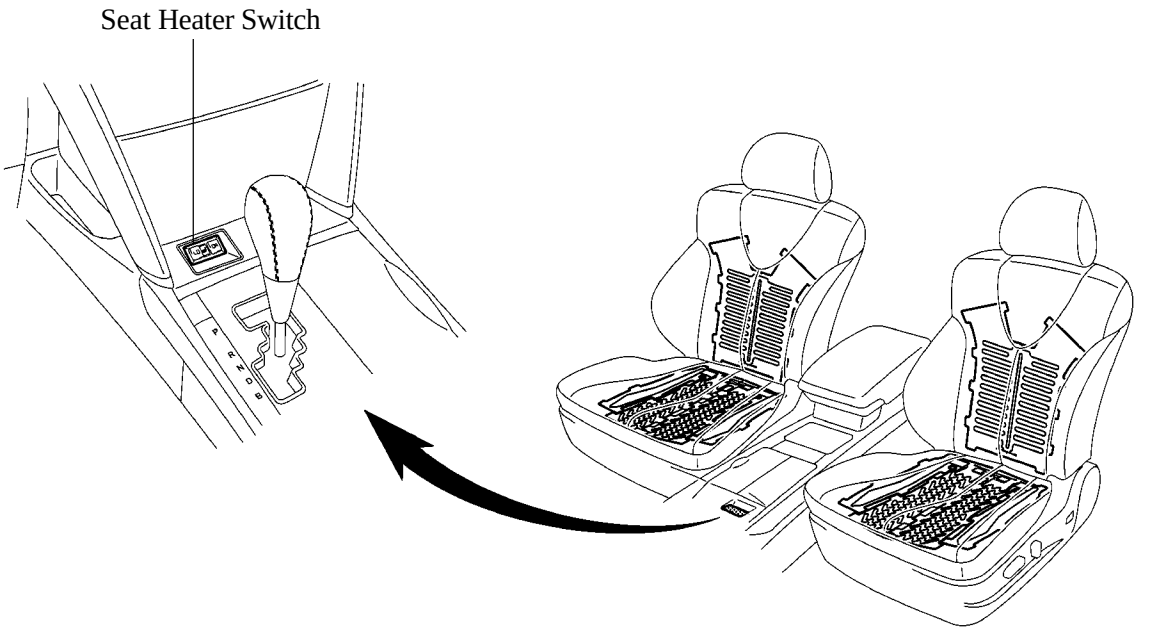

02HBE73Y

▶ System Diagram ◀

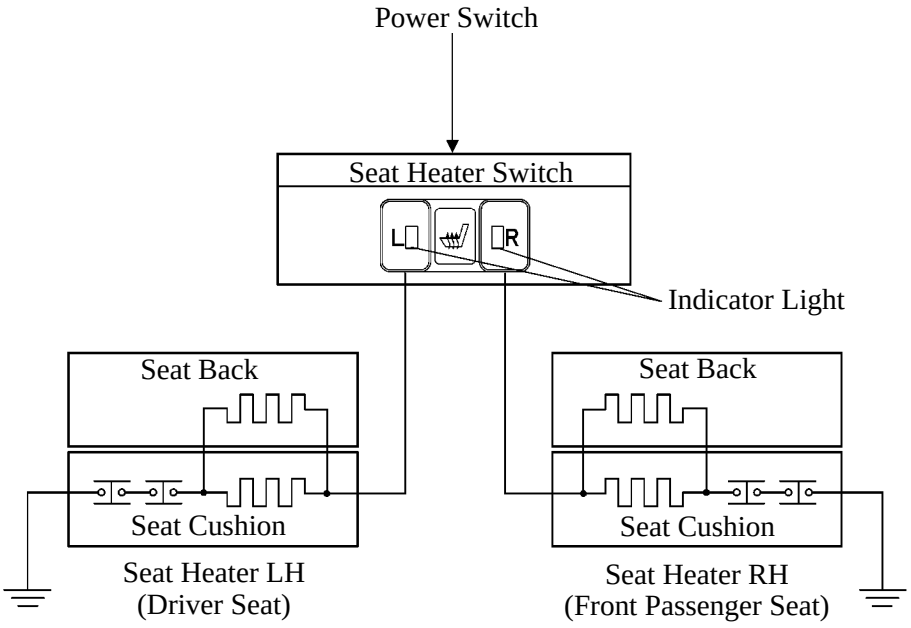

025BE175P

Downloaded from www.Manualslib.com manuals search engine

REAR WINDOW DEFOGGER SYSTEM

■DESCRIPTION

- The rear window defogger system uses the heater wire on the rear window glass to defog the rear window glass.
- This system is standard equipment on all models.
- The rear window defogger system operates at the same time as the heater function* of the outside rear view mirror.
- This system is activated when the power switch is turned on and the rear window defogger switch is pushed. This switch is provided with a timer function to turn off the defogger and mirror heater after approx. 15 minutes. The operation period of the timer may extend to approx. 60 minutes depending on the circumstances of the outside air temperature and vehicle speed.

  *: Available as an option

▶ System Diagram ◀

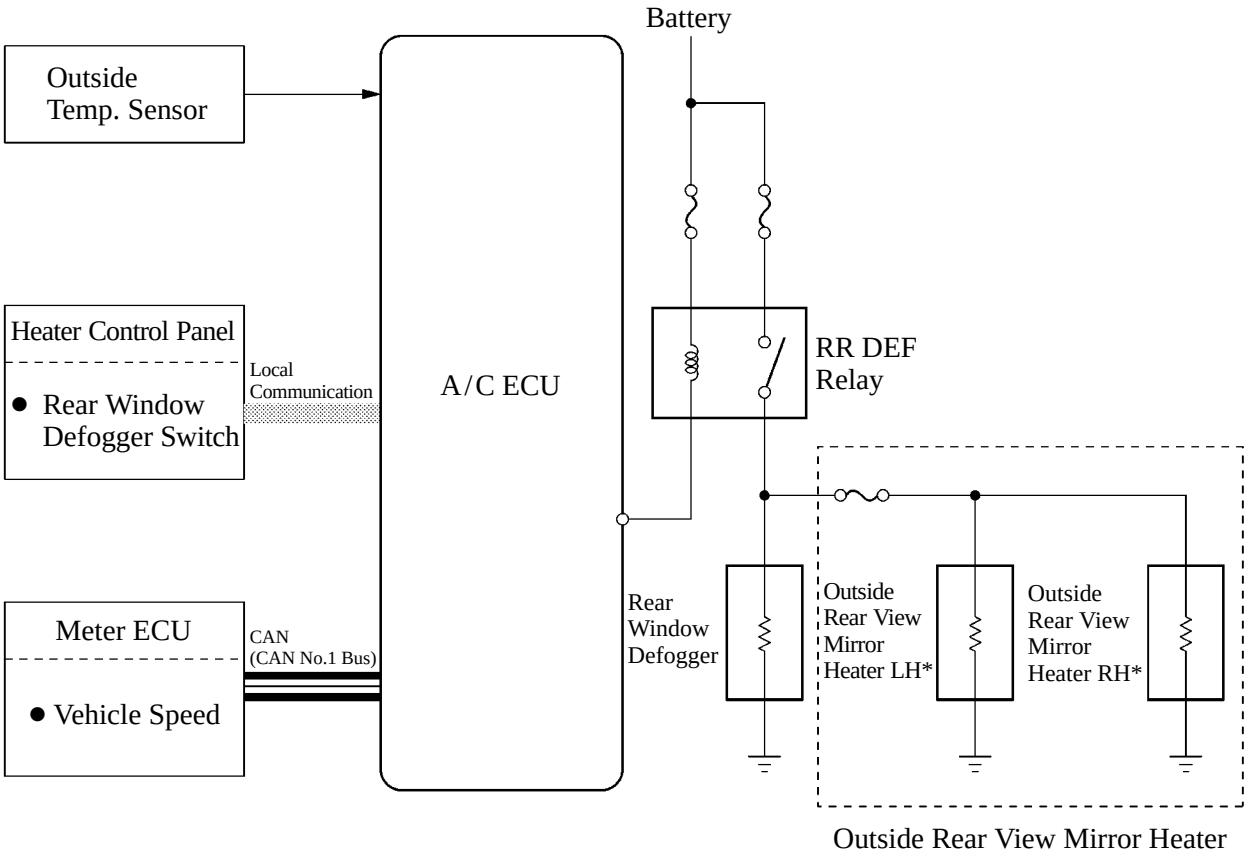

025BE176Y

*: Available as an option

Downloaded from www.Manualslib.com manuals search engine

■LAYOUT OF MAIN COMPONENTS

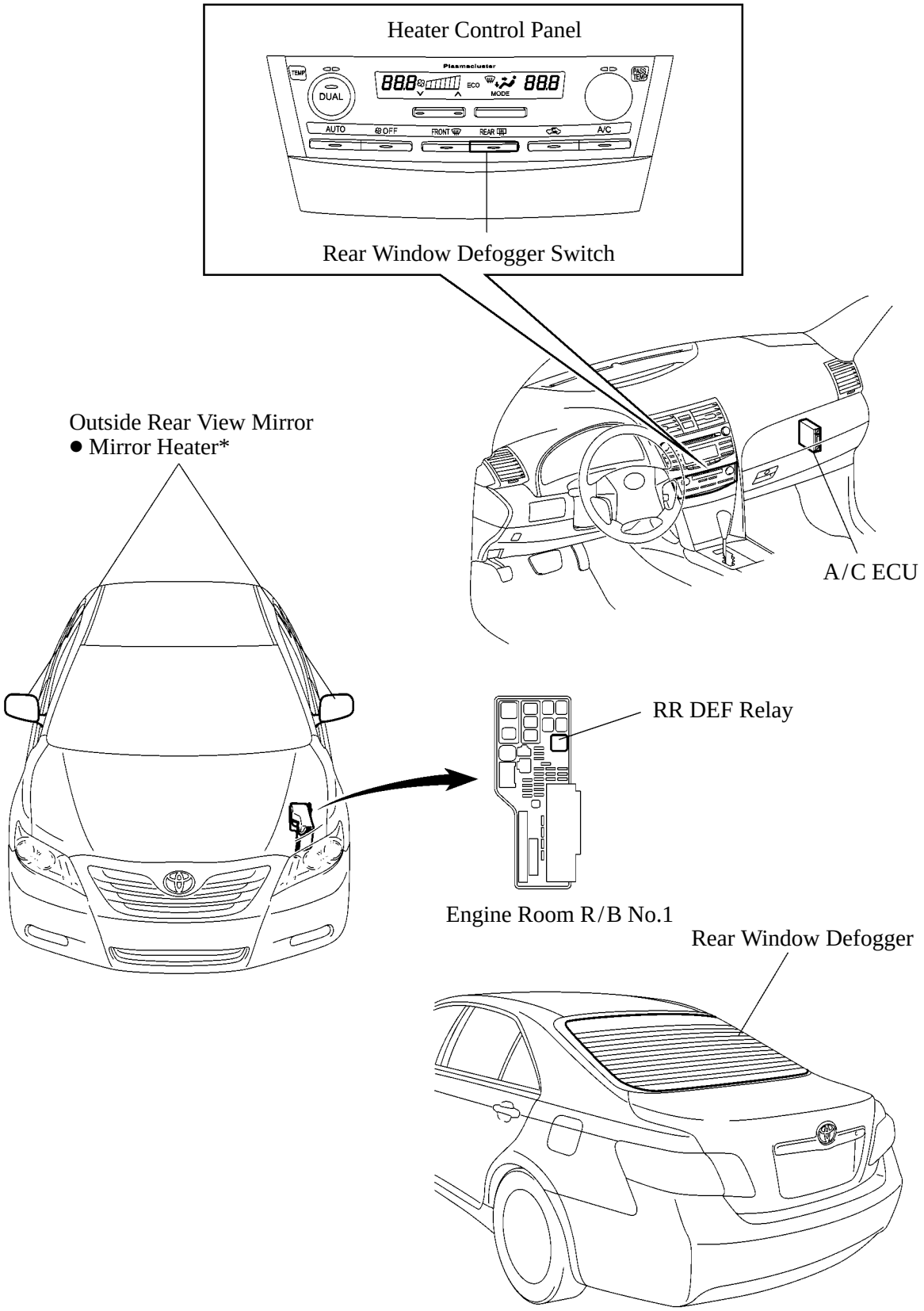

*: Available as an option

Downloaded from www.Manualslib.com manuals search engine

SLIDING ROOF SYSTEM

■DESCRIPTION

- Sliding roof system is optional equipment.
- This system uses a single glass panel to perform tilt-up-down and open-and-close operations.
- The sliding roof ECU uses 2 type Hall ICs to detect the position of the sliding roof. Sliding roof ECU and the 2 Hall ICs are integrated into the sliding roof motor assembly.

▶ System Diagram ◀

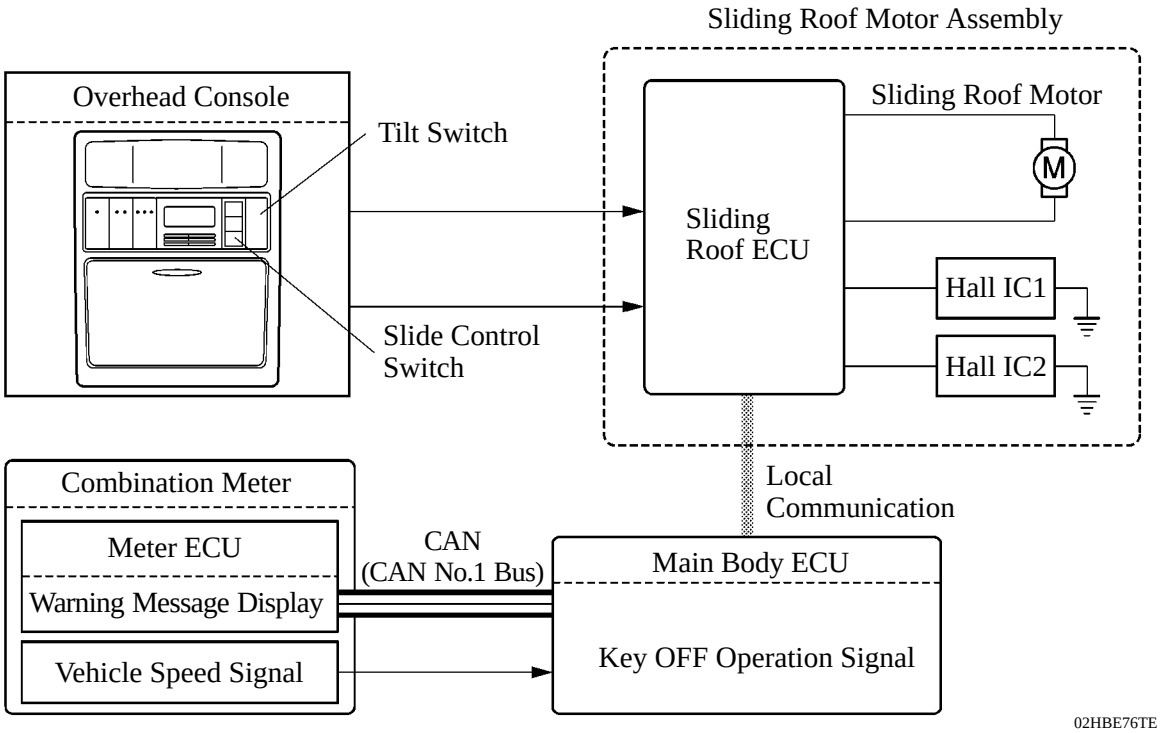

Service Tip

The memory is not cleared if battery terminals are disconnected. However, initialization is necessary after the sliding roof motor assembly is replaced. Perform the initialization as follows:

- Keep pressing the TILT UP or SLIDE CLOSE switch until the initialization completely. This will enable the sliding roof ECU to start initializing and perform the tilt up, tilt down, open, and close operations of the sliding roof in sequence.
  - Keep the switch pressed for 1 second after the tilt-up operation is completed.
  - The sliding roof ECU performs the tilt down, open, and close operations.
  - The initialization process ends when the close operation is completed.

Keep the tilt-up or slide close switch pressed during initialization. If the tilt up or close switch is released during initialization, the system will not be able to complete the initialization. If this occurs, the aforementioned steps must be performed again.

For details, see the 2007 Camry Hybrid Vehicle Repair Manual (Pub. No. RM02H0U).

Downloaded from www.Manualslib.com manuals search engine

■FUNCTION

1. General

This sliding roof system has the following functions:

Function	Outline
Manual open-and-close	This function causes the sliding roof to open (or close) while the SLIDE OPEN switch (or SLIDE CLOSE switch) is pressed. The sliding roof stops as soon as the switch is released.
One touch auto open-and-close	This function enables the sliding roof to be fully opened at 0.3 sec. or long press of the SLIDE OPEN switch (or SLIDE CLOSE switch).
Manual tilt up-and-down	This function causes the sliding roof to tilt up (or tilt down) while the TILT UP switch (or TILT DOWN switch) is pressed. The sliding roof stops as soon as the switch is released.
One touch auto tilt up-and-down	This function enables the sliding roof to be fully tilt up at 0.3 sec. or long press of the TILT UP switch (or TILT DOWN switch).
Jam protection	The jam protection function automatically stops the sliding roof and moves it open half way (or fully tilt up) if a foreign object gets jammed in the sliding roof during close or tilt down operation.
Key-off operation	The key-off operation function makes it possible to operate the sliding roof for approximately 43 seconds after the ignition switch or power source mode is turned to the ACC or OFF position, if the front doors are not opened.
Sliding roof open warning (See Page BE-164)	When the power switch is turned from IG-ON to OFF and the driver door is opened with the sliding roof open, the buzzer in the combination meter sounds once. Then, a warning message appears on the multi-information display for 8 seconds.

Downloaded from www.Manualslib.com manuals search engine

2. Jam Protection Function

- The Hall IC converts the changes in the magnetic flux that occur due to the rotation of the worm gear into pulse signals and outputs them to the ECU.

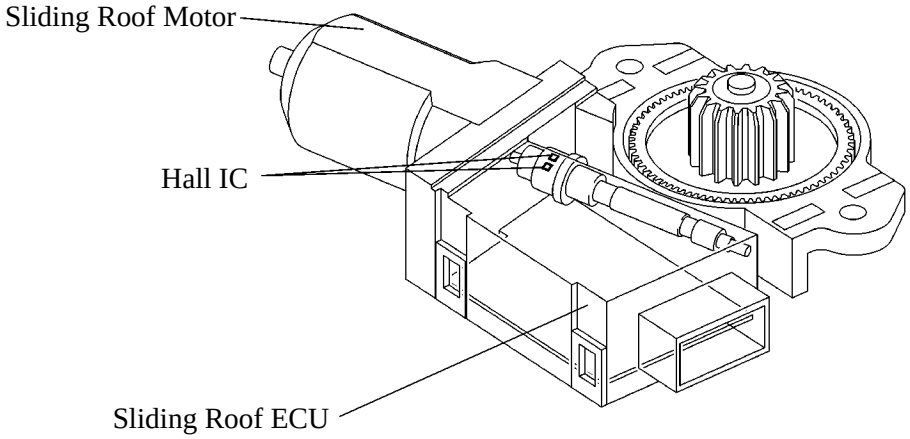

01YBE140Y

Sliding Roof Motor Assembly

- To control the jam protection function, the ECU monitors the amount of movement and judges jamming of the moon roof based on the pulse signals from the Hall IC1, and the moving direction of the moon roof from the phase difference between the pulsed from the Hall IC1 and Hall IC2.

▶ Monitoring Amount of Movement Judgment of Jamming ◀

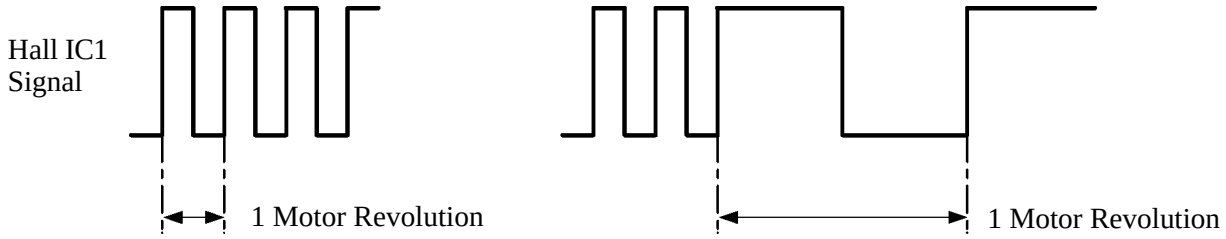

Normal **Jammed**

232BE34

▶ Judgment of Movement Direction ◀

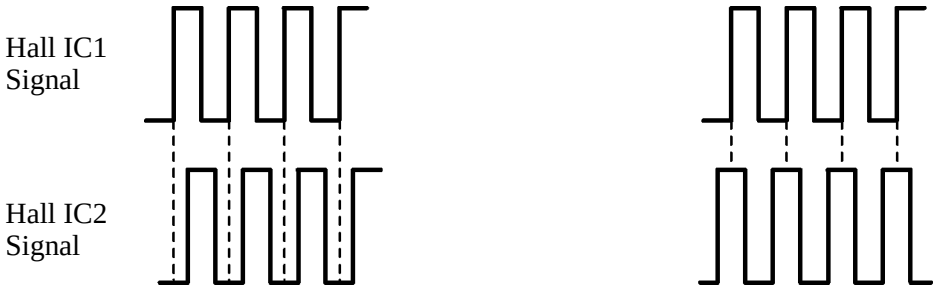

OPEN/TILT UP **CLOSE/TILT DOWN**

232BE35

Downloaded from www.Manualslib.com manuals search engine

3. Sliding Roof Open Warning

When the power switch is changed from IG-ON to OFF and the driver door is opened when the sliding roof is open, the siding roof ECU sounds the buzzer in the combination meter. Then, a warning message appears on the multi-information display.

Warning Condition		The warning is activated if all of the following conditions are met: ● Sliding roof is not fully closed. ● Power switch is OFF ● Driver door is opened.
Combination Meter	Buzzer	Sounds once
	Multi-information Display	MOONROOF OPEN 025BE179P
	Master Warning Light	Flash
Warning Stop Condition		The warning is stopped when one of the following conditions is met. ● 8 seconds have elapsed after the warning condition is detected. ● Power switch is IG-ON. ● Driver door is closed. ● Sliding roof is closed.

Downloaded from www.Manualslib.com manuals search engine

GARAGE DOOR OPENER

■DESCRIPTION

The garage door opener system is standard equipment.
This system enables the garage door to be opened or closed from inside the vehicle by operating the switch.
This system provides the features listed below.

- Up to three types of transmitter codes can be registered in the garage door opener.
- The garage door opener switch is provided in the overhead console where it is easily accessible.
- An indicator light is provided to enable the operator to verify the operation mode of the garage door opener.
- A rolling code function is used, which changes the transmitter code each time the garage door opener switch is pressed.

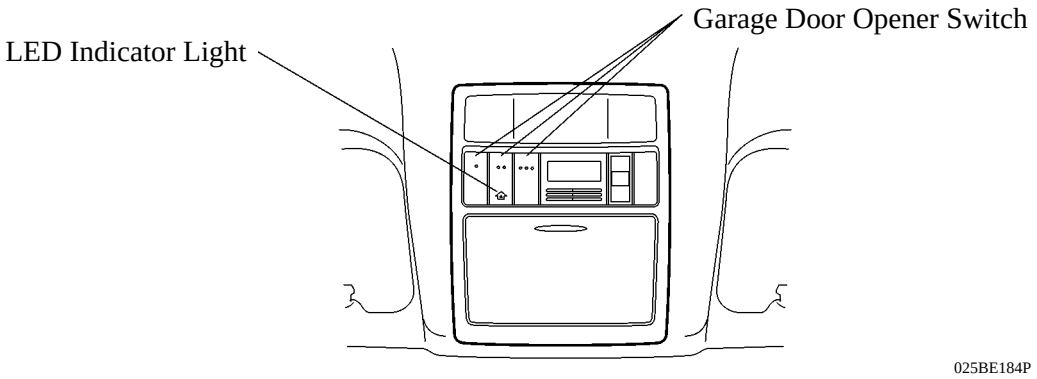

■FUNCTION

The following table shows the garage door opener functions and the indicator light operation in each of the modes.

Function	Outline	Indicator Light
Transmission Mode	While the switch is being pressed, the garage door opener transmits the code that was previously registered. Even if the button is pressed continuously, the transmission stops after 20 seconds.	Flash → On (Rolling Code) ON (Except Rolling Code)
Learning Mode	When the button is pressed continuously for 20 seconds, the mode changes to learning mode in which a transmitter code can be registered. Or an existing code can be overwritten. If no codes are registered within 90 seconds of entering learning mode, the mode changes to low power mode.	Slow flashing (during learning mode) Quick flashing (registration completed)
All Delete Mode	When the 2 outside buttons are pressed simultaneously for 20 seconds, all the transmitter codes that are registered in the button are cleared. When the buttons are released within 10 seconds of clearing the codes, the mode changes to learning mode. When the buttons are pressed for longer than 10 seconds after clearing the codes, all the buttons will be registered with a code for operation verification.	Quick flashing (code clearing completed)
Low Power Mode	If the button remains pressed for longer than 100 seconds, such as in the case in which the pressed button gets caught, the mode changes to low power mode to reduce power consumption.	OFF

Downloaded from www.Manualslib.com manuals search engine

■TRANSMITTER CODE REGISTRATION PROCEDURE

The garage door opener contains an EEPROM in which the maximum of 3 types of transmitter recognition codes can be registered. A transmitter code is registered into the EEPROM of the garage door opener according to the following steps.

A: Press the button for registering transmitter codes continuously until the indicator light flashes slowly.

B: While keeping the garage door opener's button pressed, place the transmitter for while you wish to register the code within about 25 mm (1 in.) of the garage door opener and press the transmitter's button.

C: After the flashing of the indicator light changes from slow to quick flashing, the registration of the transmitter code has been completed. Then, release your fingers from the buttons of the garage door opener and the transmitter.

D: To register the code of another transmitter, repeat the operation starting with step A. To register a new code to the button that already has a code registered to it, select the button to which you wish to register the new code and start the operation starting with step A.

CAUTION

The garage door or the gate could operate unintentionally while registering a transmitter code. Therefore, make sure that there are no people near the garage door or the gate before carrying out this operation.

NOTE:
- Before performing a transmitter code registration, stop the THS II.
- The transmitter code of a garage door opener manufactured before 1982 cannot be registered in this system.

For details of procedures of transmitter code registration, see the 2007 Camry Hybrid Vehicle Repair Manual (Pub. No. RM02H0U) to register the codes correctly.

Downloaded from www.Manualslib.com manuals search engine

TRUNK OPENER

■DESCRIPTION

The trunk opener can be operated through the key or lever. For models equipped with the smart key system, see page BE-86.

▶ System Diagram ◀

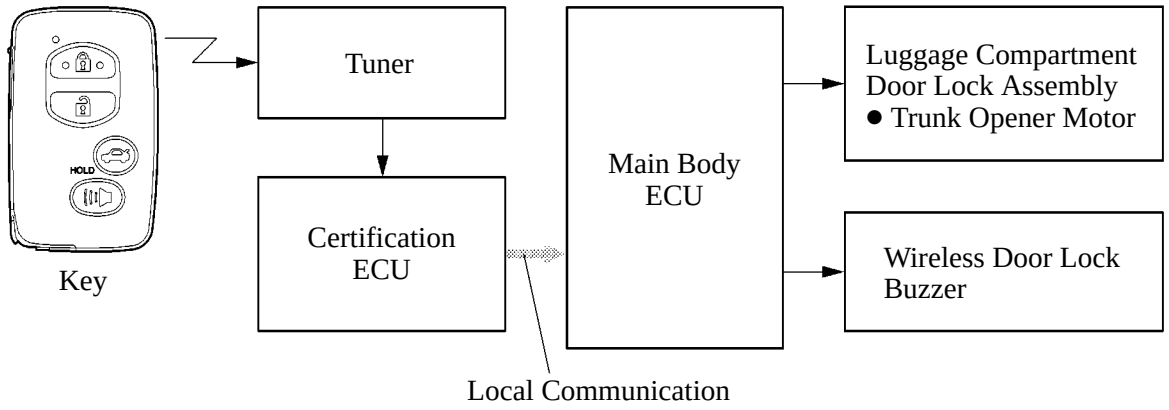

02HBE81TE

■LAYOUT OF MAIN COMPONENTS

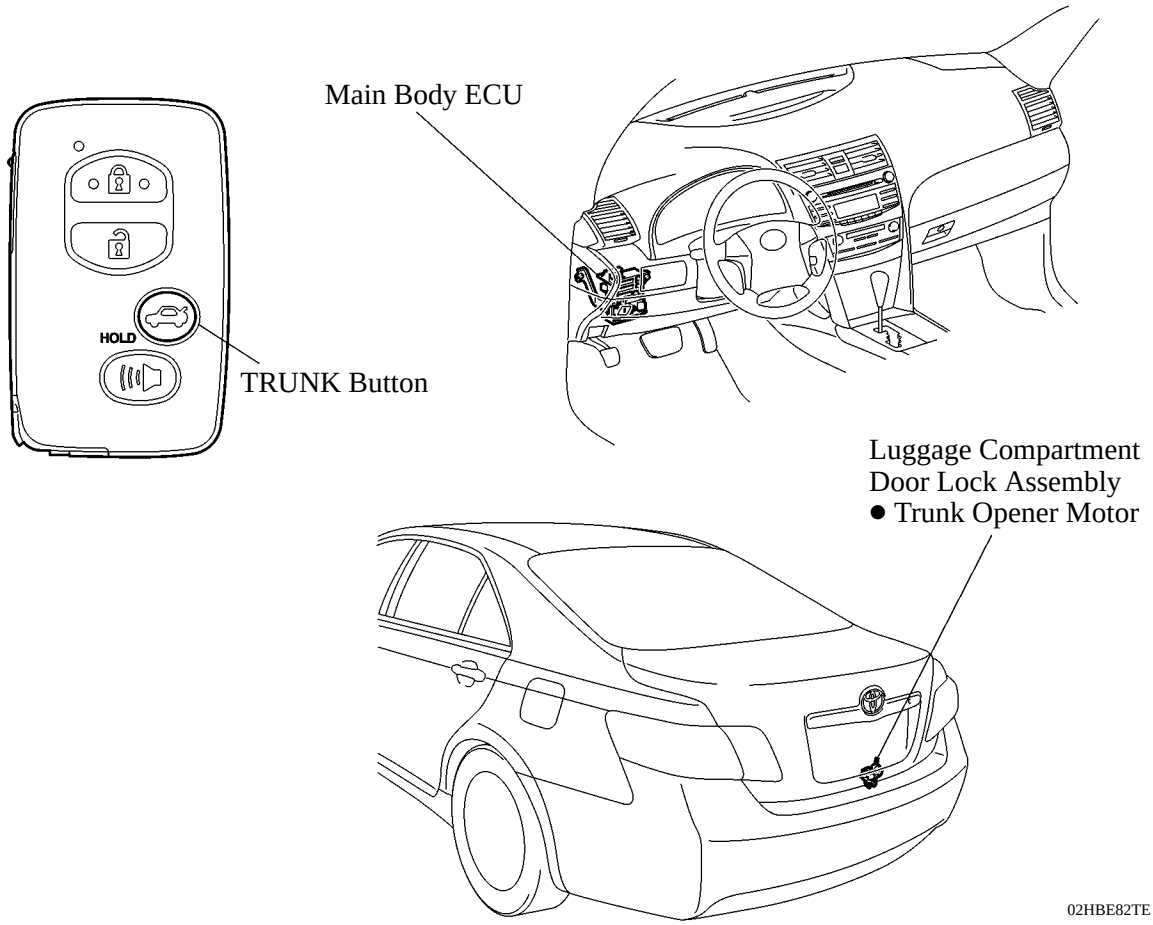

02HBE82TE

Downloaded from www.Manualslib.com manuals search engine

STEERING PAD SWITCH

■DESCRIPTION

- Steering pad switches are standard equipment on all models.
- For details about the steering pad switches, refer to the table below.

System	Switch
Audio	● VOLUME +/- ● SEEK +/- ● MODE
Multi-information Display (Combination Meter)	DISP
Air Conditioning	● TEMP+/- ● AUTO/OFF
Voice Recognition	VOICE
Telephone	● ON HOOK ● OFF HOOK

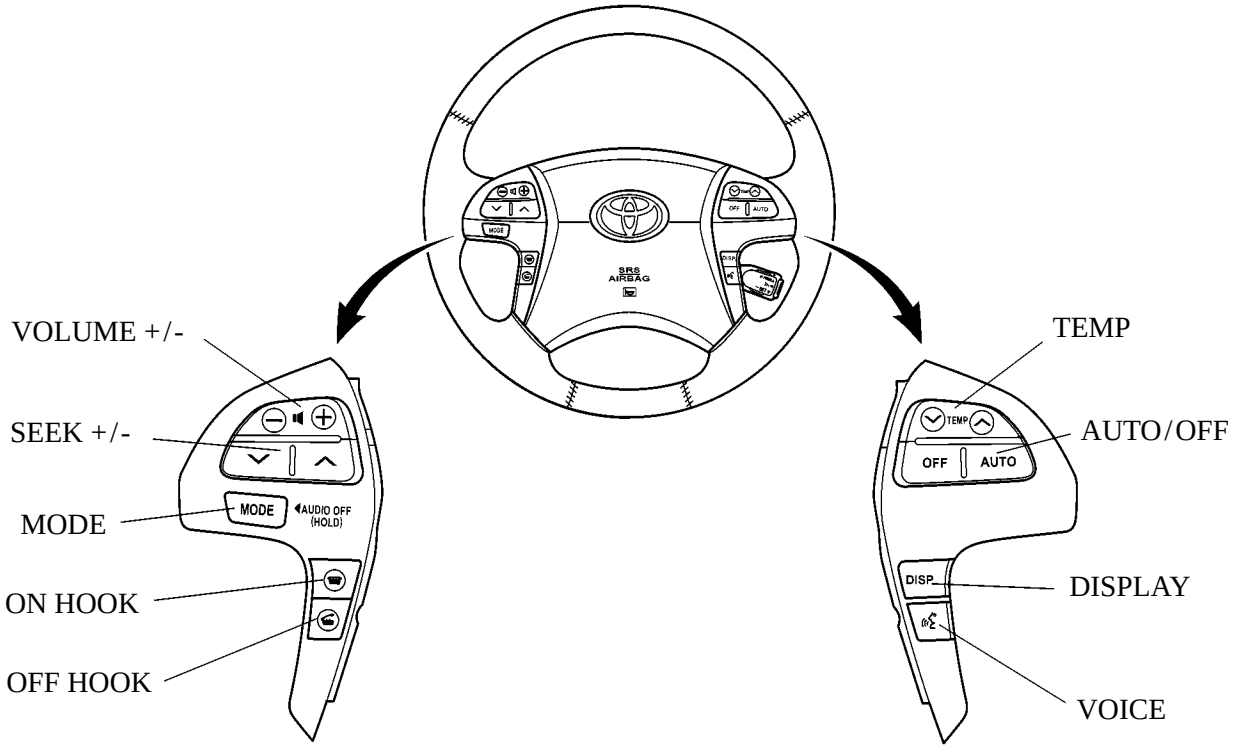

025BE182Y

Downloaded from www.Manualslib.com manuals search engine

MAJOR TECHNICAL SPECIFICATIONS

Item \ Area				U.S.A. and Canada
Body Type				Sedan
Vehicle Grade				—
Model Code				AHV40L-AEXGBA
Major Dimensions & Vehicle Weights	Overall	Length	mm (in.)	4805 (177.5)
		Width	mm (in.)	1820 (71.7)
		Height	mm (in.)	1460 (57.5)
	Wheel Base		mm (in.)	2775 (109.3)
	Tread	Front	mm (in.)	1575 (62.0)
		Rear	mm (in.)	1565 (61.6)
	Effective Head Room	Front	mm (in.)	985.6 (38.8) / 962.1 (37.9)*1
		Rear	mm (in.)	958.7 (37.7) / 949.9 (37.4)*1
	Effective Leg Room	Front	mm (in.)	1058.9 (41.7)
		Rear	mm (in.)	908.3 (35.8)
	Shoulder Room	Front	mm (in.)	1468.9 (57.9)
		Rear	mm (in.)	1446 (56.9)
	Overhang	Front	mm (in.)	945 (37.2)
		Rear	mm (in.)	1085 (42.7)
	Min. Running Ground Clearance		mm (in.)	150 (5.9)
	Angle of Approach		degrees	14.1°
	Angle of Departure		degrees	15.3°
	Curb Mass	Front	kg (lb)	950 (2094.4)
		Rear	kg (lb)	700 (1543.2)
		Total	kg (lb)	1650 (3637.6)
	Gross Vehicle Mass	Front	kg (lb)	1210 (2667.6)
		Rear	kg (lb)	1030 (2270.7)
		Total	kg (lb)	2110 (4651.7)
	Fuel Tank Capacity		ℓ (US.gal, Imp.gal)	65 (68.7, 57.2)
	Luggage Capacity (SAE)		m^3 (cu.ft.)	0.37 (13.1)
Performance	Max. Speed		km / h (mph)	185 (115)
	Max. Cruising Speed		km / h (mph)	185 (115)
	Acceleration	0 to 60 mph	sec.	8.9
		0 to 400 m	sec.	—
	Max. Permissible Speed	1st Gear	km / h (mph)	—
		2nd Gear	km / h (mph)	—
		3rd Gear	km / h (mph)	—
		4th Gear	km / h (mph)	—
		5th Gear	km / h (mph)	—
	Turning Diameter (Outside Front)	Wall to Wall	m (ft.)	11.8 (38.7)
		Curb to Curb	m (ft.)	11.0 (36.0)
Engine	Engine Type			2AZ-FXE
	Valve Mechanism			16-Valve, DOHC
	Bore x Stroke		mm (in.)	88.5 x 96 (3.48 x 3.80)
	Displacement		cm^3 (cu.in.)	2362 (144.2)
	Compression Ratio			12.5
	Carburetor Type			SFI
	Octane Rating			87 or higher
	Max. Output (SAE-NET)		kW / rpm (HP@rpm)	110 / 6000 (147 @ 6000)
	Max. Torque (SAE-NET)		N·m / rpm (ft-lbf@rpm)	187 / 4400 (138 @ 4400)
Engine Electrical	Battery Capacity (5HR)		Voltage & Amp. hr.	12-48
	Alternator Output		Watts	—
	Starter Output		kW	—
Chassis	Clutch Type			—
	Transaxle Type			P311
	Gear Ratio	In First		—
		In Second		—
		In Third		—
		In Fourth		—
		In Fifth		—
		In Reverse		—
	Differential Gear Ratio*2			3.542
	Brake Type	Front		Ventilated Disc
		Rear		Solid Disc
	Parking Brake Type			Duo-Servo
	Brake Booster Type and Size			—
	Proportioning Valve Type			—
	Suspension Type	Front		MacPherson Strut
		Rear		MacPherson Strut
	Stabilizer Bar	Front		Standard
		Rear		Standard
	Steering Gear Type			Rack & Pinion
	Power Steering Type			Electric Motor

*1: With sliding roof
*2: Counter gear ratio included

Downloaded from www.Manualslib.com manuals search engine