LAND ROVER

REGISTERED TRADE MARK

PARTS CATALOGUE

1948-53

Series I Models

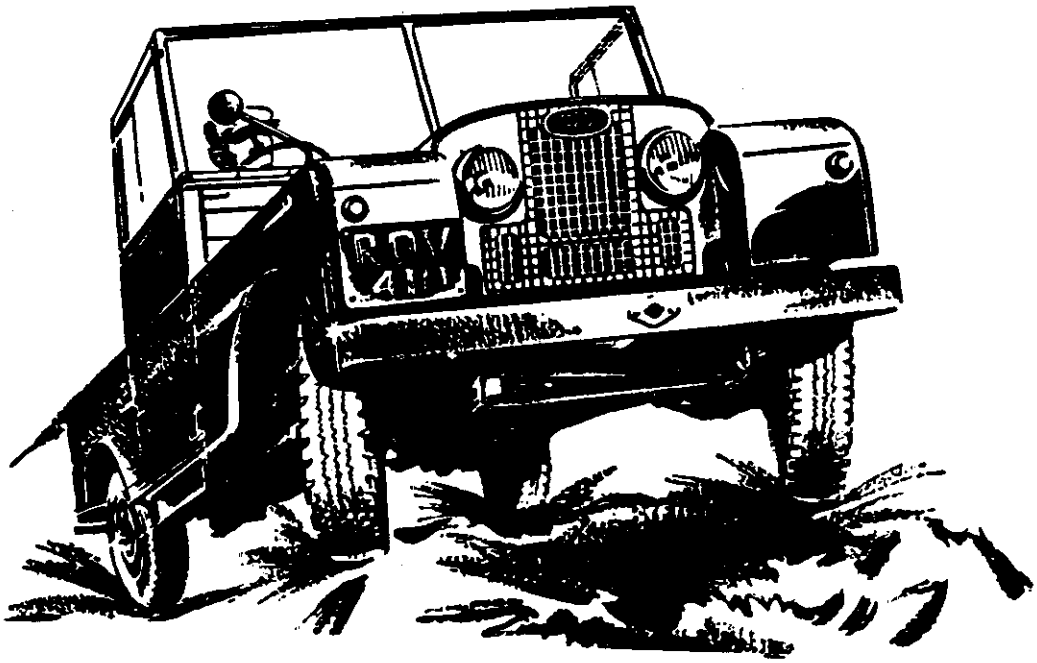

THE ROVER CO. LTD . SOLIHULL . WARWICKSHIRE . ENGLAND

PART No. 4051

cardiagn.com

cardiagn.com

7th EDITION, REPLACING ALL PREVIOUS 1948-53 LAND-ROVER SERIES I PARTS CATALOGUES
TECHNICAL PUBLICATION No. IP111/G

PARTS CATALOGUE

— for the —

LAND ROVER

1948-53 SERIES I MODELS

SECTION I
1948-51 MODELS

SECTION II
1952-53 MODELS

SECTION III
EXTRA EQUIPMENT

(APPLICABLE TO ALL MODELS) AND SPECIAL VEHICLES

By Appointment to Her Majesty Queen Elizabeth II

Manufacturers of Motor Cars and Land-Rovers

By Appointment to Her Majesty Queen Elizabeth the Queen Mother

Suppliers of Motor Cars and Land-Rovers

THE ROVER CO. LTD . SOLIHULL . WARWICKSHIRE . ENGLAND

PART No. 4051

cardiagn.com

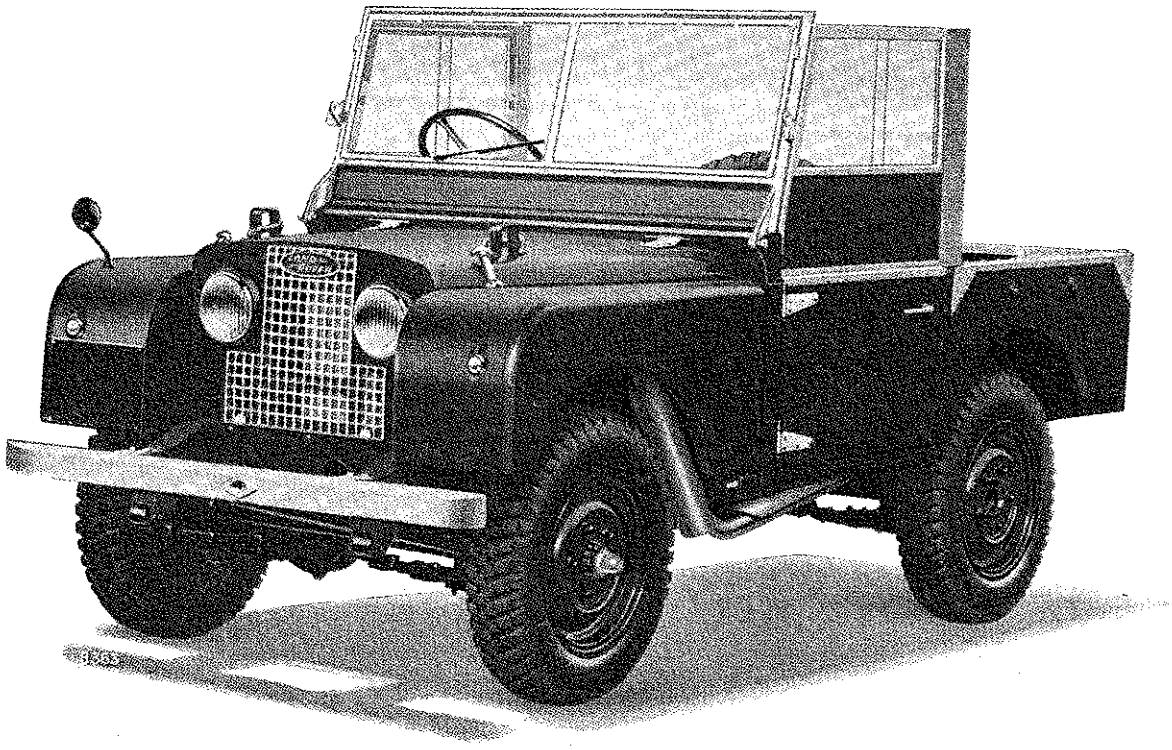

cardiagn.com

GENERAL EXPLANATION

This parts catalogue is to be used for all Land-Rover vehicles, to both Home and Export specifications; it is divided into three sections as follows:—

Section I, covers all items used on the Standard 1948-51 models;

Section II, covers all items used on the Standard 1952-53 models;

Section III, includes all the Extra Equipment that can be supplied, together with items used on special vehicles. The parts listed in this Section cover all models 1948-53.

Each Section is complete in itself and contains an Index to Sections, General Index and Numerical Index.

The part number quoted is always common to all the models covered by the section in question unless otherwise stated, in which case differences are noted in the Remarks column

NOMENCLATURE. As the list covers both Home and Export models, reference is made throughout the text to the "left-hand" (L.H.) and "right-hand" (R.H.) sides of the vehicle, rather than to "near-side" and "off-side". The "left-hand side" is that to the left hand when the vehicle is viewed from the rear; similarly, "left-hand drive" (L.H.D.) models are those having the driving controls on the left-hand side, again when the vehicle is viewed from the rear

ASSEMBLIES are printed in CAPITALS, and all the parts comprising that assembly are shown by indenting the alignment of the description column, the indentation reverting to the original aligument when the assembly is complete. The indentation is clearly shown by the numbers 1, 2, 3, 4 at the top of each page.

An example taken from Page 21 is given below:

1 2 3 4
FRONT COVER ASSEMBLY
Dowel locating front cover
Oil seal for front cover
Joint washer for front cover

It will be seen that the FRONT COVER ASSEMBLY includes the dowel and oil seal for front cover (indentation 1), while the joint washer, by reverting to alignment with FRONT, is excluded from the assembly

In all cases where the entire assembly is required, quote only the assembly number.

SIZES OF BOLTS AND NUTS are B.S.F. except where otherwise stated, and bolt lengths shown are the under-head dimension. Bolts which differ in any way from standard B.S.F., Whitworth or B.A. specification are indicated as "special"; in such cases common stock cannot be used for replacement.

USE OF THIS PARTS LIST It is suggested that for convenient use of this list, reference should first be made to the appropriate illustration; identification of the part required will then immediately transfer attention to the text by means of the plate reference number This system will be found particularly effective with regard to the smaller items; major assemblies, etc., may, of course, be found directly by using the subject index on the following pages.

The plate reference numbers in the left-hand column of the text are only for convenience in the use of the book, and should not be quoted on orders for spare parts.

WHEN ORDERING SPARE PARTS, ALWAYS:

(1) Quote a PART or ASSEMBLY NUMBER, giving the NAME OF THE PART and the VEHICLE NUMBER for which it is required.

(2) Order from the nearest authorised Rover Distributor or Dealer

(3) Specify how despatch is to be made.

cardiagn.com

INSTRUCTIONS GENERALES

Ce Catalogue des pièces de rechange doit être utilisé pour rechercher le numéro des pièces désirées pour tous les véhicules Land-Rover, spécifications "Home" (Marché intérieur) et "Export" (Marché extérieur). Cet ouvrage est fractionné en trois parties bien distinctes:—

Première Partie, représentant toutes les pièces utilisées sur les modèles de base 1948-51.
Deuxième Partie, représentant toutes les pièces utilisées sur les modèles de base 1952-53.
Troisième Partie, représentée par tous les accessoires supplémentaires qui peuvent être fournis ensemble avec les pièces utilisées sur les véhicules spéciaux.

Chaque Partie est complète en elle-même et comprend une Table des Matières des Sections, une Table des Matières Générale et un Index des Numéros de Pièces.

Le numéro de la pièce est commun à tous les modèles groupés sous la section en question, à moins que la pièce ne soit de désignation spéciale. En pareil cas, les différences sont notées dans la colonne des observations.

NOMENCLATURE

Dans ce catalogue, nous avons recours à la spécification droite et gauche, droite et gauche étant définis par rapport à la position qu'occupe le conducteur lorque celui-ci est assis au volant de son véhicule.

Les ENSEMBLES sont imprimés en lettres MAJUSCULES et toutes les pièces comprises dans un ensemble sont indiquées en déplacant la désignation de ces pièces d'une colonne vers la droite par rapport à la position qu'occupe la désignation de l'ensemble. Lorsque cet ensemble est complet, la désignation de la pièce suivante est ramenée à l'alignement originel, c'est-à-dire vers la gauche. L'alignement des désignations est clairement montré par les numéros 1, 2, 3, 4, en haut de chaque page.

Un exemple pris à la Page 21 est donné ci-dessous:

1 2 3 4
FRONT COVER ASSEMBLY
Dowel locating front cover
Oil seal for front cover
Joint washer for front cover

L'on remarquera que l'ensemble "FRONT COVER ASSEMBLY" comprend les pièces "Dowel locating front cover" et "Oil seal for front cover" (colonne 1), tandis que la pièce suivante "Joint washer for front cover" est exclue de l'ensemble, la désignation de celle-ci étant ramenée en ligne avec l'ensemble "FRONT COVER ASSEMBLY".

Lorsqu'un ensemble complet est désiré, il suffira d'indiquer le numéro de l'ensemble.

Sauf indications contraires, LES DIMENSIONES DES BOULONS ET ECROUS sont données en B.S.F.; la dimension spécifiée pour chaque boulon représente la longueur du corps de ceux-ci. Les boulons qui diffèrent de la spécification standard B.S.F., Whitworth ou B.A., sont indiqués comme étant de désignation spéciale; dans ces cas particuliers, des boulons ordinaires ne peuvent être utilisés pour les remplacer.

COMMENT SE SERVIR DE CE CATALOGUE

Pour faciliter la recherche d'une pièce, il est recommandé de la situer en premier lieu sur la planche descriptive convenable puis de rechercher dans le texte la désignation et le numéro de celle-ci, en utilisant le numéro de repère trouvé sur la planche à proximité de la pièce. Cette méthode facilitera grandement la recherche des petites pièces; les principaux ensembles peuvent évidemment être recherchés directement au moyen de la table des matières.

L'objet des numéros de repère figurant dans la colonne de gauche, est de faciliter l'emploi de ce catalogue et ne doivent pas être indiqués sur les bons de commande.

DANS LA PASSATION DES COMMANDES, IL EST INDISPENSABLE DE:

(1) Donner le NUMERO DE LA PIECE ou de L'ENSEMBLE, la DESIGNATION COMPLETE DE CHAQUE PIECE ainsi que le NUMERO DU VEHICULE à laquelle la pièce est destinée.
(2) Spécifier le mode d'expédition désiré.
(3) Placer la commande avec l'agent Rover le plus proche.

cardiagn.com

INSTRUCCIONES GENERALES

Este catálogo de piezas de repuesto debe ser empleado para todos los vehículos Land-Rover, tanto en los modelos nacionales, como para la exportación; se divide en tres secciones, como a continuación se detalla:—

Sección I. Especificando todos los artículos empleados en los modelos Standard 1948-51;
Sección II. Especificando todos los artículos empleados en los modelos Standard 1952-53;
Seccion III. Incluye el equipo adicional que puede ser suministrado, así como artículos empleados en los vehículos especiales. Las piezas especificadas en esta sección se refieren a todos los modelos 1948-53.

Las Secciones son completas y contienen un Indice de la Sección, Indice General, e Indice Numérico.

El número de pieza citado es siempre común a todos los modelos a que se hace referencia en la sección, a menos que se indique de otra forma, en cuyo caso, dicha diferencia está anotada en la columna titulada "Remarks" (Observaciones).

NOMENCLATURA. Como la lista se refiere a modelos Nacionales y de Exportación, la referencia en el texto se hace a vehículos con volante a la izquierda (L.H.) y volante a la derecha (R.H.). El costado izquierdo del vehículo es aquél que queda situado a la mano izquierda cuando se ve el vehículo desde su parte posterior; los vehículos con volante a la izquierda son aquellos que tienen los mandos de la dirección a la izquierda, también cuando el vehículo se ve desde la parte posterior.

Los CONJUNTOS van impresos en MAYUSCULAS y todas las piezas que comprenden dicho conjunto quedan indicadas por espaciados o desplazamientos de la alineación de la columna descriptiva; el espaciado vuelve a la alineación primitiva cuando el conjunto queda terminado. El espaciado se aprecia con toda claridad por la numeración 1, 2, 3, 4 en la parte superior de cada página.

Como ejemplo tomemos la Página 21 en la que se indica:

1 2 3 4
FRONT COVER ASSEMBLY
Dowel locating front cover
Oil seal for front cover
Joint washer for front cover

Se podrá observar que el FRONT COVER ASSEMBLY incluye el "dowel" y el "oil seal" para la cubierta delantera (espaciado 1) mientras que la "joint washer", por volver a la alineación con la palabra FRONT, queda excluída del conjunto.

En todos los casos donde se requiere un conjunto completo, cítese solamente el número del conjunto.

LOS TAMANOS DE PERNOS Y TUERCAS son de B.S.F., excepto en los casos en que se indique lo contrario, el tamaño del perno es el de la longitude del espárrago del mismo. Los pernos que varién de los especificados por la B.S.F., Whitworth, o B.A., son indicados como tipos "especiales"; en tales casos no se pueden emplear para el recambio los que haya en existencia.

EMPLEO DE ESTA LISTA DE PIEZAS. Para facilitar la identificación de una pieza, recomendamos colocar dicha pieza primero identificándola con la ilustración apropiada; la identificación de la pieza se podrá obtener inmediatamente refiriéndose al texto donde se hallará el número de referencia. Este sistema tendrá mayor efectividad en las piezas pequeñas; los conjuntos de mayor importancia pueden ser identificados directamente refiriéndose al índice que hay en las páginas siguientes.

El número de referencia de la placa en la columna izquierda del texto es sólo para conveniencia en el empleo de este libro y no deberá ser citado al ordenar piezas de repuesto.

AL PEDIR PIEZAS DE REPUESTO, SIEMPRE:

(1) Se citará el NUMERO DE LA PIEZA o NUMERO DEL CONJUNTO, dando el NUMERO DE LA PIEZA Y NUMERO DEL VEHICULO para el cual se precisa.
(2) Colóquese el pedido con el Distribuidor Rover más próximo.
(3) Especifíquese como se ha de efectuar el envío.

cardiagn.com

INSTRUÇÕES GERAIS

Este catálogo de peças sobressalentes destina-se a todos os veículos Land-Rover, tanto para os modelos do mercado interno, como para os de exportação. Está dividido em três partes assim discriminadas:—

Parte I, abrangendo todas as peças usadas nos modelos Standard de 1948-51;
Parte II, abrangendo todas as peças usadas nos modelos Standard de 1952-53;
Parte III, que inclue todos os acessórios extra que podem ser fornecidos, bem como as peças usadas em veículos de modelo especial. As peças especificadas nesta Parte referem-se a todos os modelos de 1948 até 1953.

As differentes Partes do catálogo são completas em separado, cada uma dispondo de um Índice próprio, um Índice Geral e de um Índice Numérico.

O número indicado para cada peça e sempre comum a todos os modelos abrangidos pela parte do catálogo em questão, a não ser que se especifique o contrário, em cujo caso as excepções são anotadas na coluna de "Remarks" (Observações).

NOMENCLATURA. Como este catálogo se refere igualmente a modelos do Mercado Interno e de Exportação, faz-se sempre referência no texto aos lados esquerdo (L.H.) e direito (R.H.) do veículo, sendo o primeiro o que fica do lado da mão esquerda quando se olha para o veículo da parte traseira. Os veículos com volante à esquerda (L.H.D.) são aqueles que têm os comandos da direcção do lado esquerdo, também quando se olha para o veículo da parte de trás.

Os CONJUNTOS são impressos em letras MAIÚSCULAS e todas as peças que fazem parte de um conjunto são indicadas escrevendo os respectivos nomes afastados um espaço para a direita do alinhamento da coluna descritiva; logo que o conjunto esteja completo, deixa de far-se esse espaço e volta-se ao alinhamento original. As mudanças de alinhamento são fàcilmente observadas por meio dos números 1, 2, 3, 4, escritos no topo de cada página.

Como um exemplo, tome-se a página 21, onde poderá ler-se:

1 2 3 4
FRONT COVER ASSEMBLY
Dowel locating front cover
Oil seal for front cover
Joint washer for front cover.

Notar-se-à que o "FRONT COVER ASSEMBLY" inclui o "dowel" e a "oil seal" da "front cover" (coluna 1), ao passo que a "joint washer", já escrita por debaixo do alinhamento original da palavra "FRONT", não pertence a esse conjunto.

Em todos os casos em que se pretenda um conjunto completo, é suficiente indicar apenas o número do conjunto.

Os TAMANHOS DOS PERNOS E PORCAS são B.S.F., excepto nos casos en que se indique o contrário, sendo o tamanho do perno o comprimento do respectivo corpo sem cabeça. Os pernos que difiram de qualquer modo das especificações B.S.F., Whitworth, ou B.A., são indicados como de tipo "especial"; nestes casos não podem ser substituídos pelos normalemente há em armazém.

EMPREGO DESTA LISTA DE PEÇAS. Para facilitar a identificação de qualquer peça, recomenda-se primeiramente compará-la com a ilustração apropriada; a identificação da peça poderá então ser feita imediatamente, referindo-se ao texto onde se encontrará a designação o respectivo número de referência. A referência ao texto faz-se utilizando o número da chapa junto da ilustração. Este sistema é especialmente vantajoso para as peças mais pequenas; os conjuntos principais podem ser identificados directamente no índice impresso nas páginas seguintes.

Os números de referência das chapas inscritos na coluna do lado esquerdo do texto destinam-se únicamente a facilitar o emprego deste livro, não devendo ser citados quando se fazem encomendas de peças.

AO FAZER A ENCOMENDA DE PEÇAS SOBRESSALENTES, DEVE SEMPRE:

(1) Indicar-se o NÚMERO DA PEÇA ou o NÚMERO DO CONJUNTO, dando ao mesmo tempo o NOME DA PEÇA e o NÚMERO DO VEÍCULO a que se destina;

(2) Dirigir-se a encomenda ao Distribuidor Rover mais próximo;

(3) Especificar-se como o despacho deve ser feito.

cardiagn.com

LAND-ROVER

SECTION I

1948-51 MODELS

For vehicles numbered:

MODEL	YEAR 1948-49	1950	1951
Basic Vehicle Home	R 860001 to R 863000 R 8660001 onwards	R 06100001 onwards	16100001 onwards
Basic Vehicle L.H.D. Export	L 860001 to L 863000 L 8660001 onwards	L 06100001 onwards	16130001 onwards
Basic Vehicle R.H.D. Export	—	R 06100001 onwards	16160001 onwards
Station Wagon Home	R 8670001 onwards	R 06200001 onwards	16200001 onwards
Station Wagon L.H.D. Export	L 8670001 onwards	L 06200001 onwards	16230001 onwards
Station Wagon R.H.D. Export	R 8670001 onwards	R 06200001 onwards	16260001 onwards
Welding Outfit Home	R 8680001 onwards	R 06300001 onwards	16300001 onwards
Welding Outfit L.H.D. Export	L 8680001 onwards	L 06300001 onwards	16330001 onwards
Welding Outfit R.H.D. Export	R 8680001 onwards	R 06300001 onwards	16360001 onwards
C.K.D. L.H.D. Export	—	L 06100001 onwards	16630001 onwards
C.K.D. R.H.D. Export	—	R 06100001 onwards	16660001 onwards

The prefix "R" is omitted from 1950 Home models from VEHICLES numbered 06110348, 06200265 and 06300001 onwards

cardiagn.com

cardiagn.com

INDEX TO SECTIONS 1948-51

Description	Page
A	
Accelerator lever and rods	128–129
B	
Body cappings and sockets	154–157
Brake master cylinder and brake lever	104–107
Brakes, foot	98–103
C	
Carburettor	28– 31
Chassis frame, road springs and shock absorbers	116–125
Clutch pedal and linkage	126–127
Clutch withdrawal mechanism	62– 63
Crankshaft and cylinder head	8– 13
Cylinder block	6– 7
D	
Dash, windscreen and bonnet	172–177
Distributor and starter	36– 37
Dynamo and fixings	38– 39
E	
Exhaust system	130–131
F	
Flywheel and clutch—Borg and Beck type	42– 43
Flywheel and clutch—Rover type	40– 41
Four-wheel drive selectors and transfer gear lever	70– 73
Freewheel	58– 59
Freewheel selectors and transfer gear lever	66– 69
Front axle and propeller shaft	80– 85
Front cover, side cover and sump	20– 21
Fuel system	134–139
G	
Gearbox, main casing	44– 47
Gearbox, selectors and levers	56– 57
Gearbox, shafts and gears	52– 55
Gearbox, transfer casing	49– 51
General electrical equipment	148–153
H	
Handbrake lever, L.H.D.	110–113
Handbrake lever, R.H.D	108–109
Handbrake, transmission	114–115
Head, side and tail lamps	144–147
I	
Instruments	140–143
M	
Main gear lever	64– 65
Manifolds	32– 35
N	
Numerical index	180–187
O	
Oil filter, pipes and oil filler	22– 23
Oil pump	18– 19
R	
Radiator and fittings	132–133
Rear axle and propeller shaft	74– 79
S	
Seat base, seats, front floor and front wings	158–165
Steering column	90– 93
Steering relay and linkage	94– 97
T	
Tailboard, door and sidescreen	166–171
Tools	178
Tracta joints and front hubs	86– 89
Transfer shaft housing, four-wheel drive	60– 61
Trimming raw materials	179
V	
Valve gear	14– 17
W	
Water pump and thermostat	24– 27

cardiagn.com

INDEX

A Description	Page
Air cleaner	139
Accelerator pedal	129
Accelerator pedal housing	129
Accelerator shaft	129
Adjuster timing chain	15
Ammeter	141
Anchor plate, brake, foot	99
Anchor plate, brake, hand	115
Axle, front	81
Axle, rear	75
Axle, stub	89

B	
Back rest, seat	163
Balance weight, road wheel	125
Battery	149
Battery casing	123
Bearing, camshaft	15
Bearing, connecting rod	9
Bearing, gearbox	53
Bearing, main	9
Bearing, transfer box	55
Belt, fan	27
Bell housing	45
Board, floor	155
Board, tail	167
Body	155
Body mounting	157
Body sides	155
Bonnet	175
Bonnet fastener	177
Brake cylinder, master	105
Brake cylinder, wheel	99
Brake drum, foot	101
Brake drum, hand	115
Brake, hand, L H D	111
Brake, hand, R H D	109
Brake lever, hand	109
Brake pedal	107
Brake pipes	103
Brake shoe, foot	99
Brake shoe, hand	115
Brake supply tank	105
Brakes, foot	99
Brake, transmission	115
Breather pipe, engine	21
Bumper, front	117

C	
Cable clips	153
Cable harness, dash	149
Cable harness, frame	149
Cable harness, headlamp	151
Cable harness, main	149

C Description	Page
Cable, petrol tank	149
Cable, speedometer	141
Camshaft	15
Camshaft bearing	15
Camshaft chain	15
Camshaft chain adjuster	15
Carburettor	29
Carburettor levers	33
Casing, transfer box	49
Centre cover panel	159
Chain, tailboard	157
Change speed lever, main	65
Change speed lever, transfer	67
Chassis frame	117
Cleaner, air	139
Clutch, Borg and Beck type	43
Clutch, Rover type	41
Clutch pedal	127
Clutch shaft	127
Clutch withdrawal	63
Coil, ignition	149
Connecting rod	9
Connecting rod bearing	9
Control box, voltage	149
Control, mixture	143
Cover, front	21
Cover, gearbox	161
Cover plate, water	7
Cover plate, wing valance	165
Cover, rocker side	21
Cover, rocker top	13
Crankcase sump	21
Crankshaft	9
Cushion, seat	163
Cylinder block	7
Cylinder, brake master	105
Cylinder, brake wheel	99
Cylinder head	11

D	
Damper, vibration	9
Dash	173
Differential, front	81
Differential, rear	75
Dipstick, gearbox	45
Dipstick, sump	21
Distributor	37
Distributor housing	19
Door hinge	169
Door lock	169
Doors and fittings	167
Drag link	95
Drawbar, rear	117
Driving shaft, oil pump	19

cardiagn.com

D Description	Page
Drop arm	91
Drum, foot brake	101
Drum, hand brake	115
Dynamo	39

E	
Engine	7
Engine, breather pipe	21
Engine support, front	7
Engine support, rear	51
Exhaust manifold	35
Exhaust pipe, front	131
Exhaust silencer	131
Exhaust valve	15

F	
Fan	27
Fan belt	27
Fastener bonnet	177
Fastener, windscreen	175
Filler cap petrol	135
Filter, oil, external	23
Filter, oil, internal	21
Floorboard	155
Flywheel	41
Flywheel housing	41
Follower, inlet valve	17
Four-wheel drive selector	71
Frame harness	149
Freewheel	59
Freewheel housing	59
Freewheel lever	67
Freewheel selector	67
Front bumper	117
Front cover	21
Front exhaust pipe	131
Front shock absorber	121
Front wing	163
Fuse box	149

G	
Gallery pipe, oil	7
Gearbox	45
Gearbox bearings	53
Gearbox cover	161
Gears, main gearbox	53
Gears, transfer box	55
Glass, windscreen	173
Grille, radiator	133
Grommet, boll housing	45
Grommet, rubber, electrical	153
Gudgeon pin	11

H Description	Page
Hand brake lever	109
Handle, lifting	121
Harness, dash	149
Harness, frame	149
Harness main	149
Harness, panel	141
Headlamp	145
Hinge, bonnet	175
Hinge door	169
Hinge, locker lids	159
Hood socket	155
Horn	149
Horn button and dipper switch	91
Housing, accelerator pedal	129
Housing, clutch withdrawal	63
Housing, distributor	19
Housing freewheel	59
Housing rear mainshaft bearing	49
Housing, swivel pin	87
Housing, thermostat	25
Housing, transfer shaft	61
Hub front	89

I	
Inlet manifold	33
Inlet valve	15
Inner tube	125
Instruments	141

L	
Lamp head	145
Lamp, number plate	147
Lamp, rear	147
Lamp side	145
Lamp stop	147
Layshaft	53
Level unit, petrol tank	135
Lever carburettor	33
Lever change speed, main	65
Lever, change speed transfer	67
Lever, clutch	127
Lever, freewheel	67
Lever, hand brake	109
Lever, steering	87
Lever, steering relay	95
Lifting handle	121
Light warning instrument panel	141
Link, drag	95
Lock, door	169
Longitudinal tube, steering	97

M	
Main bearing	9
Mainshaft bearing housing, rear	49
Mainshaft gearbox	53
Manifold exhaust	35

cardiagn.com

M Description	Page
Manifold, inlet	33
Master cylinder, brake	105
Mounting, body	157
Mixture control	143

N	
Number plate lamp	147
Numerical index	180

O	
Oil filter, external	23
Oil filter, internal	21
Oil gallery pipe	7
Oil pressure switch	23
Oil pump	19
Oil pump driving shaft	19
Output shaft four-wheel drive	61
Output shaft freewheel	59

P	
Paint	179
Panel harness	141
Pedal, accelerator	129
Pedal brake	107
Pedal, clutch	127
Petrol pipe	137
Petrol pump	135
Petrol sediment bowl	135
Petrol tank	135
Petrol tank level unit	135
Pin, gudgeon	11
Pin, shackle	119
Pin, swivel	87
Pipe, brake	103
Pipe, engine breather	21
Pipe, oil gallery	7
Piston	11
Piston ring	11
Plate, toe	159
Plug, sparking	37
Propeller shaft, front	85
Propeller shaft, rear	79
Pump, oil	19
Pump, petrol	135
Pump, water	25
Push rod, inlet	17

R	
Radiator	133
Rear axle	75
Rear axle casing	75
Rear axle shaft	79
Rear drawbar	117
Relay lever, steering	95
Release valve oil	19

R Description	Page
Ring, piston	11
Road spring, front	117
Road spring, rear	119
Road wheel	125
Rocker cover, side	21
Rocker cover, top	13
Rod, hand brake	115
Rod, track	95
Rubber grommet, electrical	153

S	
Seat	163
Seat cushion	163
Sediment bowl, petrol	135
Selector, four-wheel drive	71
Selector, freewheel	67
Selector shaft, gear	57
Shackle pin	119
Shaft, brake lever	105
Shaft, clutch lever	127
Shaft, front axle	87
Shaft, gearbox selector	57
Shaft output, four-wheel drive	61
Shaft, output, freewheel	59
Shaft, propeller, front	85
Shaft, propeller, rear	79
Shaft rear axle	79
Shock absorber, front	121
Shock absorber, rear	121
Shoe, foot brake	99
Shoe, hand brake	115
Side lamp	145
Side screen	171
Silencer, exhaust	131
Sleeve, clutch withdrawal	63
Sparking plug	37
Speedometer	141
Speedometer cable	141
Spring, road, front	117
Spring, road, rear	119
Starter motor	37
Steering column	91
Steering, drag link	95
Steering, longitudinal tube	97
Steering relay lever	95
Steering, track rod	95
Steering wheel	91
Stop lamp	147
Stub axle	89
Sump crankcase	21
Sump filter	21
Supply tank, brake	105
Support bracket, steering column	93
Support, engine front	7
Support, engine rear	51
Switch, lamps	141
Switch oil pressure	23

cardiagn.com

S Description	Page
Switch, panel lights	141
Switch, starter	141
Switch, stop lamp	107
Swivel pin	87
Swivel pin housing	87
Synchronising clutch	53

T	
Tailboard	167
Tailboard chain	157
Tail lamp	147
Tank, brake supply	105
Tank, petrol	135
Tappet push rod	17
Thermostat	25
Thermostat housing	25
Timing chain	15
Toe plate	159
Tools	178
Track rod	95
Transfer box casing	49
Transfer shaft housing	61

T Description	Page
Transmission brake	115
Trimming materials	179
Tyre, road wheel	125

V	
Valve guide exhaust	7
Valve guide, inlet	11
Vibration damper	9
Voltage control box	149

W	
Water pump	25
Wheel cylinder, brake	99
Wheel, road	125
Wheel, steering	91
Windscreen	173
Windscreen fastener	175
Windscreen wiper	149
Wing, front	163
Wing valance cover plate	165
Withdrawal, clutch	63

cardiagn.com

CYLINDER BLOCK

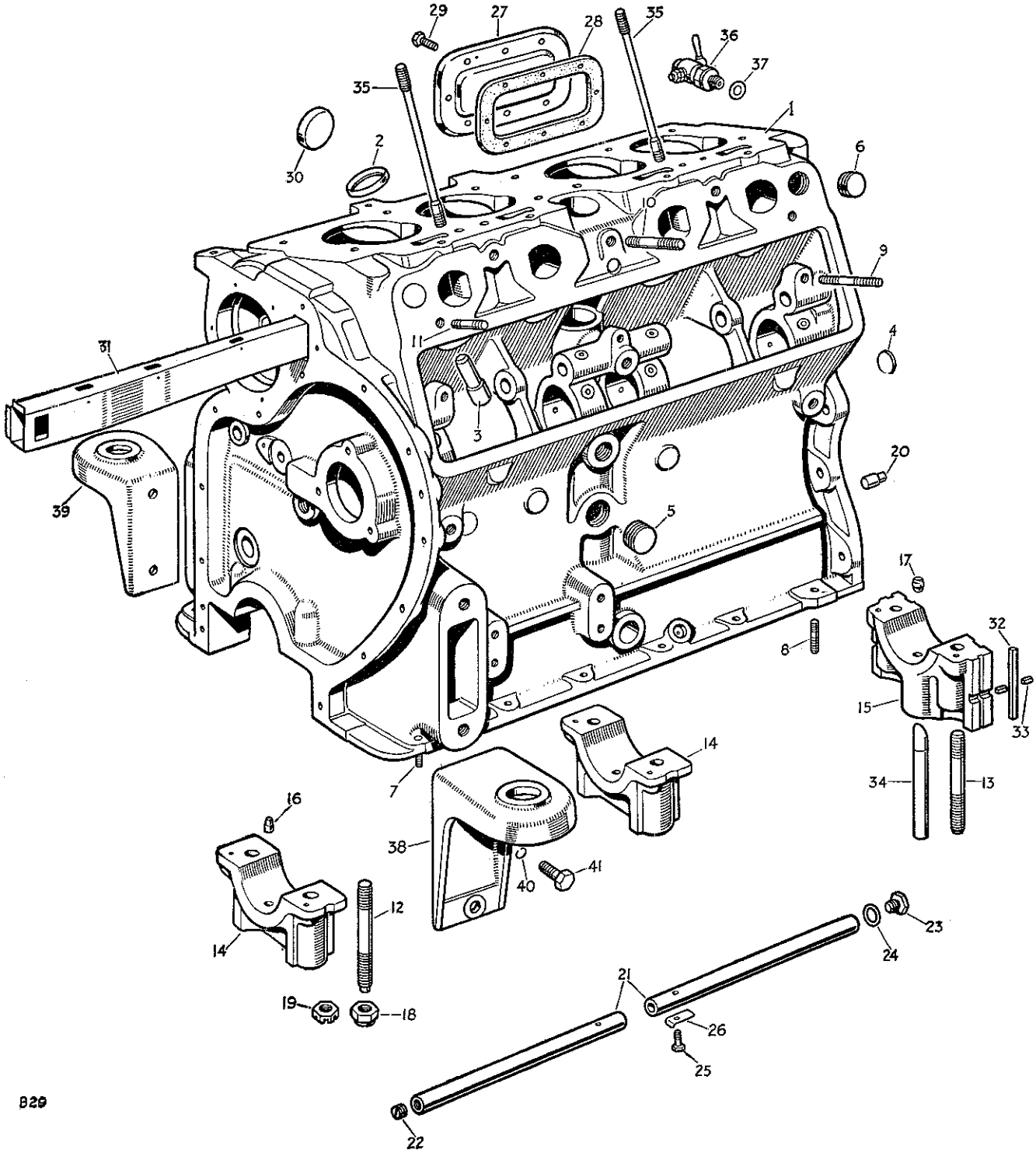

cardiagn.com

CYLINDER BLOCK

PLATE REF.	1 2 3 4 DESCRIPTION	Qty.	Part No.	REMARKS
	ENGINE AND CLUTCH ASSEMBLY	1	218517	*Engines numbered 860001 to 06100200
	ENGINE AND CLUTCH ASSEMBLY	1	235365	*Engines numbered 06100201 onwards
1	CYLINDER BLOCK ASSEMBLY	1	230845	
	Cylinder block, crankshaft, pistons, camshaft, valves and rockers	1	262662	
2	Insert for exhaust valve seat	4	09065	
3	Valve guide, exhaust	4	265444	
4	Core plug $1\frac{1}{8}''$ dia.	4	52615	
5	Core plug 1″ dia.	2	09191	
6	Core plug $\frac{7}{8}''$ dia.	1	210492	
7	Stud, short } For oil sump	13	2890	10 off from engines numbered 865550 onwards
	Stud } For oil sump	3	57126	Engines numbered 865550 onwards
8	Stud, long } For oil sump	2	52177	
9	Stud, short, for bottom rocker cover	2	9499	
	Stud, long, for cover and oil filler	1	6809	
10	Stud, long } For exhaust manifold	3	09207	
11	Stud, medium } For exhaust manifold	1	57126	
	Stud, short } For exhaust manifold	1	01291	
12	Stud, front and centre } For main bearing	4	214967	Engines numbered 860001 to 867431
	Stud, front and centre } For main bearing	4	07925	Engines numbered 867432 onwards
13	Stud, rear } For main bearing	2	214968	Engines numbered 860001 to 867431
	Stud, rear } For main bearing	2	09029	Engines numbered 867432 onwards
16	Dowel, locating main bearing and bearing cap	12	07877	11 off from engines numbered 862381 onwards
17	Dowel, locating rear main bearing cap	1	230300	Engines numbered 862381 onwards
18	Special self-locking nut fixing main bearing cap	6	214867	Engines numbered 860001 to 867431
19	Castle nut fixing main bearing	6	2104	Engines numbered 867432 onwards
	Locking wire for nuts	As required	81312	Engines numbered 867432 onwards
20	Dowel, locating flywheel housing	2	52124	
21	Oil gallery pipe	2	09034	
22	Plug for gallery pipe, front	1	03129	
23	Plug for gallery pipe, rear	1	216933	
24	Joint washer for rear plug	1	3803	
25	Set bolt ($\frac{1}{4}''$ x $\frac{5}{8}''$ long) } Fixing gallery pipe to block	2	215053	
26	Locker } Fixing gallery pipe to block	2	2995	
27	Water cover plate, side	2	210399	Alternative to the line below } Check carefully before ordering
28	Joint washer for water cover plate	2	210404	Alternative to the line below } Check carefully before ordering
29	Set bolt ($\frac{1}{4}''$ x $\frac{5}{8}''$ long) fixing water cover plate	16	215053	Alternative to the line below } Check carefully before ordering
30	Cup plug	3	236988	Alternative to the above } Check carefully before ordering
31	Water pipe in cylinder block	1	09101	
33	Cork packing for rear main bearing cap	4	269854	
34	Oil return pipe in rear bearing cap	1	09178	
35	Stud for cylinder head	2	212332	
36	Drain tap for cylinder block	1	243237	
37	Joint washer for drain tap	1	2347	
38	Engine front support bracket complete L.H.	1	07095	
39	Engine front support bracket complete R.H.	1	07096	
40	Spring washer } Fixing brackets to cylinder block	4	3078	Alternative type, check carefully before ordering
	Plain washer } Fixing brackets to cylinder block	4	3934	Alternative type, check carefully before ordering
	Locker } Fixing brackets to cylinder block	2	235720	Alternative type, check carefully before ordering
41	Set bolt ($\frac{1}{2}''$ x $1\frac{3}{16}''$ long) } Fixing brackets to cylinder block	4	215488	

* ENGINE AND CLUTCH ASSEMBLY does not include carburettor and fittings.

cardiagn.com

CRANKSHAFT AND CYLINDER HEAD

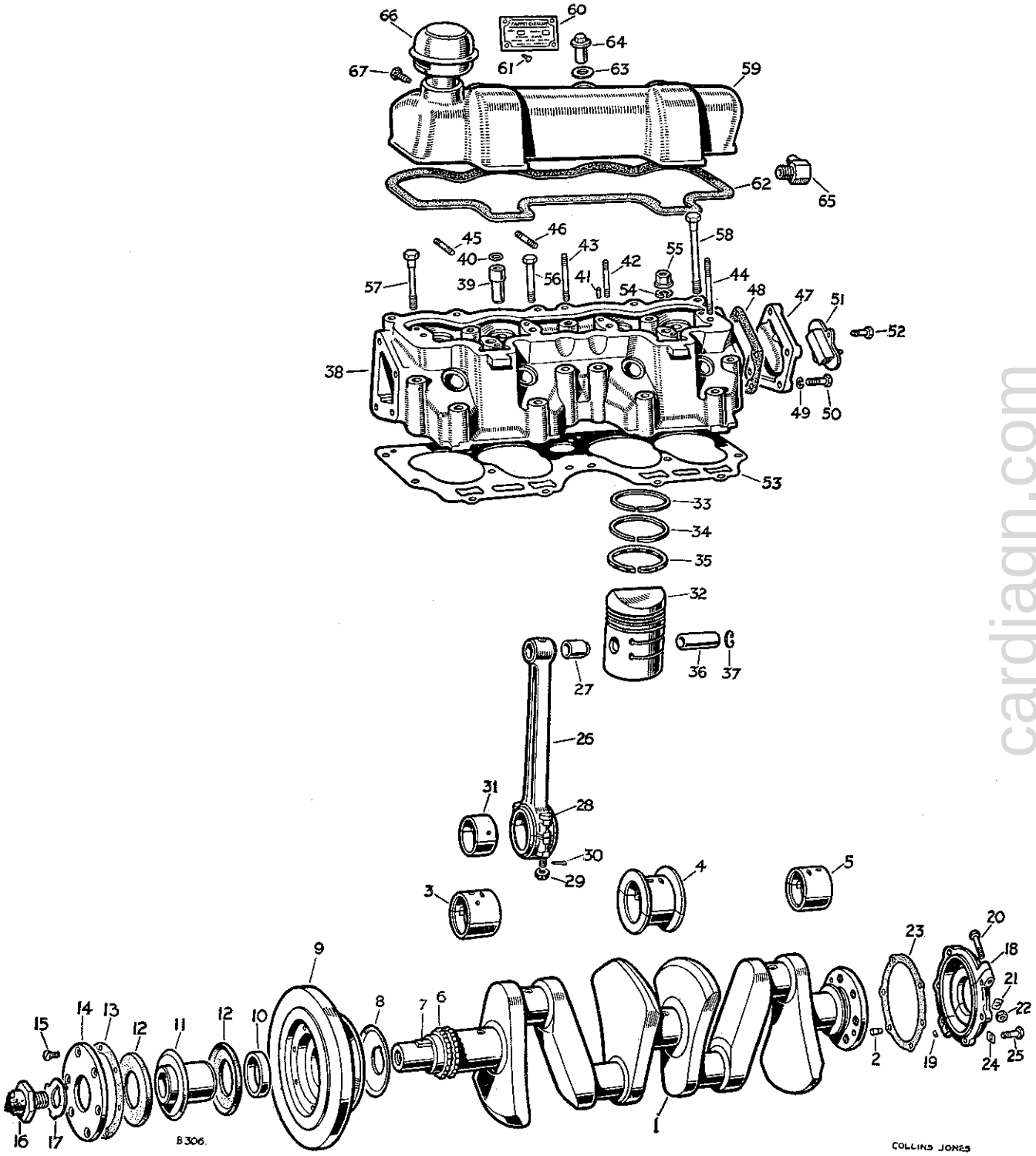

cardiagn.com

CRANKSHAFT AND CYLINDER HEAD

PLATE REF.	1 2 3 4 DESCRIPTION	Qty.	Part No.	REMARKS
1	CRANKSHAFT ASSEMBLY, STD.	1	212382	
	CRANKSHAFT ASSEMBLY, .015″ U.S.	1	217930	
	CRANKSHAFT ASSEMBLY, .030″ U.S.	1	217931	
	CRANKSHAFT ASSEMBLY, .040″ U.S.	1	217932	
2	Dowel for flywheel	1	6395	
3	Main bearing, front, Std.	1	217937	These part numbers cover bearing halves supplied in pairs, *i.e.* top and bottom. Bearing halves are not supplied separately.
	Main bearing, front, .015″ U.S.	1	217943	
	Main bearing, front, .030″ U.S.	1	217949	
	Main bearing, front, .040″ U.S.	1	217955	
4	Main bearing, centre, Std.	1	217938	
	Main bearing, centre, .015″ U.S.	1	217944	
	Main bearing, centre, .030″ U.S.	1	217950	
	Main bearing, centre, .040″ U.S.	1	217956	
5	Main bearing, rear, Std.	1	217939	
	Main bearing, rear, .015″ U.S.	1	217945	
	Main bearing, rear, .030″ U.S.	1	217951	
	Main bearing, rear, .040″ U.S.	1	217957	
6	Chainwheel on crankshaft	1	59054	
7	Key locating chainwheel	1	52015	
8	Oil thrower on crankshaft	1	59053	
	VIBRATION DAMPER ASSEMBLY	1	215935	
9	DAMPER FLYWHEEL AND BUSH ASSEMBLY	1	215936	
10	Bush for flywheel	1	03188	
11	Driving flange	1	09017	
12	Rubber disc for damper	2	03017	
13	Shim	As required	03020	
14	Retaining plate	1	03018	
15	Set screw ($\frac{1}{4}$″ x $\frac{81}{64}$″ long) fixing plate to flywheel	6	03093	
16	Starting dog	1	215887	
17	Lock washer for starting dog	1	03092	
18	CRANKSHAFT OIL RETAINER CAP ASSEMBLY	1	212383	
19	Dowel (Fixing halves together)	2	09209	
20	Bolt ($\frac{1}{4}$″ x $1\frac{1}{2}$″ long) (Fixing halves together)	2	250517	
21	Locker (Fixing halves together)	2	2500	
22	Nut ($\frac{1}{4}$″) (Fixing halves together)	2	2823	
23	Joint washer (Fixing oil retainer cap to cylinder block)	1	09089	
24	Locker (Fixing oil retainer cap to cylinder block)	6	2500	
25	Set bolt ($\frac{1}{4}$″ x $\frac{81}{64}$″ long) (Fixing oil retainer cap to cylinder block)	6	237142	
26	CONNECTING ROD ASSEMBLY	4	212366	
27	Gudgeon pin bush	4	217846	
28	Special bolt	8	07884	
29	Castle nut ($\frac{3}{8}$″)	8	2102	
30	Split pin, fixing connecting rod cap	8	2392	
31	Connecting rod bearing halves, Std.	8	237272	
	Connecting rod bearing halves, .015″ U.S.	8	237926	
	Connecting rod bearing halves, .030″ U.S.	8	237928	
	Connecting rod bearing halves, .040″ U.S.	8	237929	

cardiagn.com

CRANKSHAFT AND CYLINDER HEAD

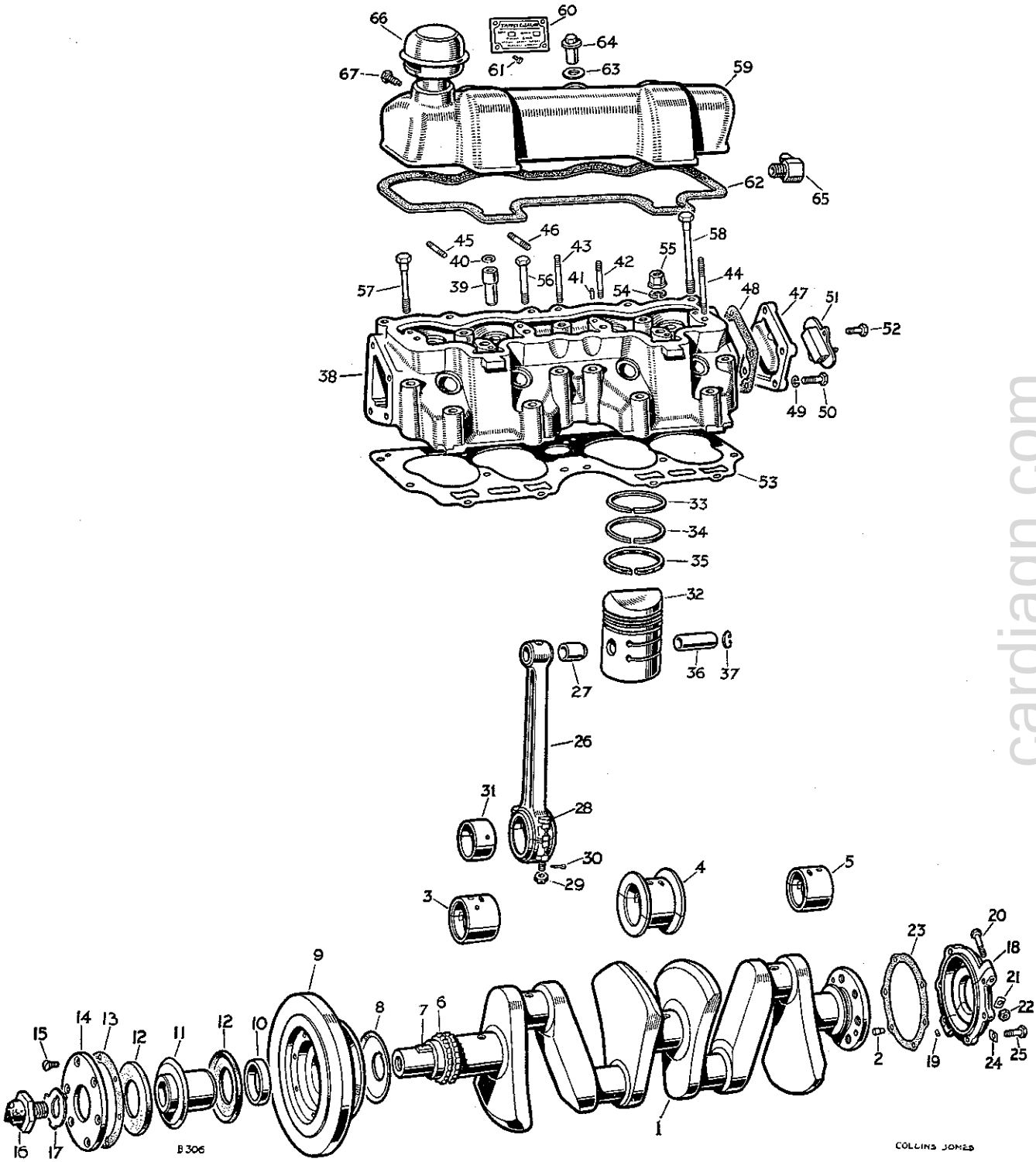

cardiagn.com

CRANKSHAFT AND CYLINDER HEAD

PLATE REF.	1 2 3 4 DESCRIPTION	Qty.	Part No.	REMARKS
32	PISTON ASSEMBLY, Std	4	234832	
	PISTON ASSEMBLY, .010" O.S.	4	235013	
	PISTON ASSEMBLY, .020" O.S.	4	235014	
	PISTON ASSEMBLY, .030" O.S	4	235015	
	PISTON ASSEMBLY, .040" O.S	4	235016	
33	Piston ring, compression, Std.	8	212207	
	Piston ring, compression, .010" O.S.	8	217910	
	Piston ring, compression, .020" O.S.	8	217911	
	Piston ring compression, .030" O.S.	8	217912	
	Piston ring, compression, .040" O.S	8	217913	
34	Stepped scraper ring, Std.	4	234329	
	Stepped scraper ring, .010" O.S.	4	235034	
	Stepped scraper ring, .020" O.S.	4	235035	
	Stepped scraper ring, .030" O.S.	4	235036	
	Stepped scraper ring, .040" O.S.	4	235037	
35	Maxilite scraper ring, Std.	4	234328	
	Maxilite scraper ring, .010" O.S.	4	235043	
	Maxilite scraper ring, .020" O.S.	4	235044	
	Maxilite scraper ring, .030" O.S.	4	235045	
	Maxilite scraper ring, .040" O.S.	4	235046	
36	Gudgeon pin, Std.	4	09148	
	Gudgeon pin, .001" O.S.	4	217926	
	Gudgeon pin, .003" O.S.	4	217927	
37	Circlip for gudgeon pin	8	03170	
38	CYLINDER HEAD ASSEMBLY	1	233430	
39	Valve guide, inlet	4	266924	
4'	Rubber ring for inlet valve guide	4	233419	Engines numbered 06106720 onwards
4	Dowel, locating rocker brackets	6	59059	
42	Stud, short } For rocker	3	9499	
43	Stud, long } brackets	1	3604	
	Stud for top rocker cover	2	212277	Engines numbered 860001 to 867640
44	Stud for top rocker cover	3	6318	Engines numbered 867641 onwards

cardiagn.com

CRANKSHAFT AND CYLINDER HEAD

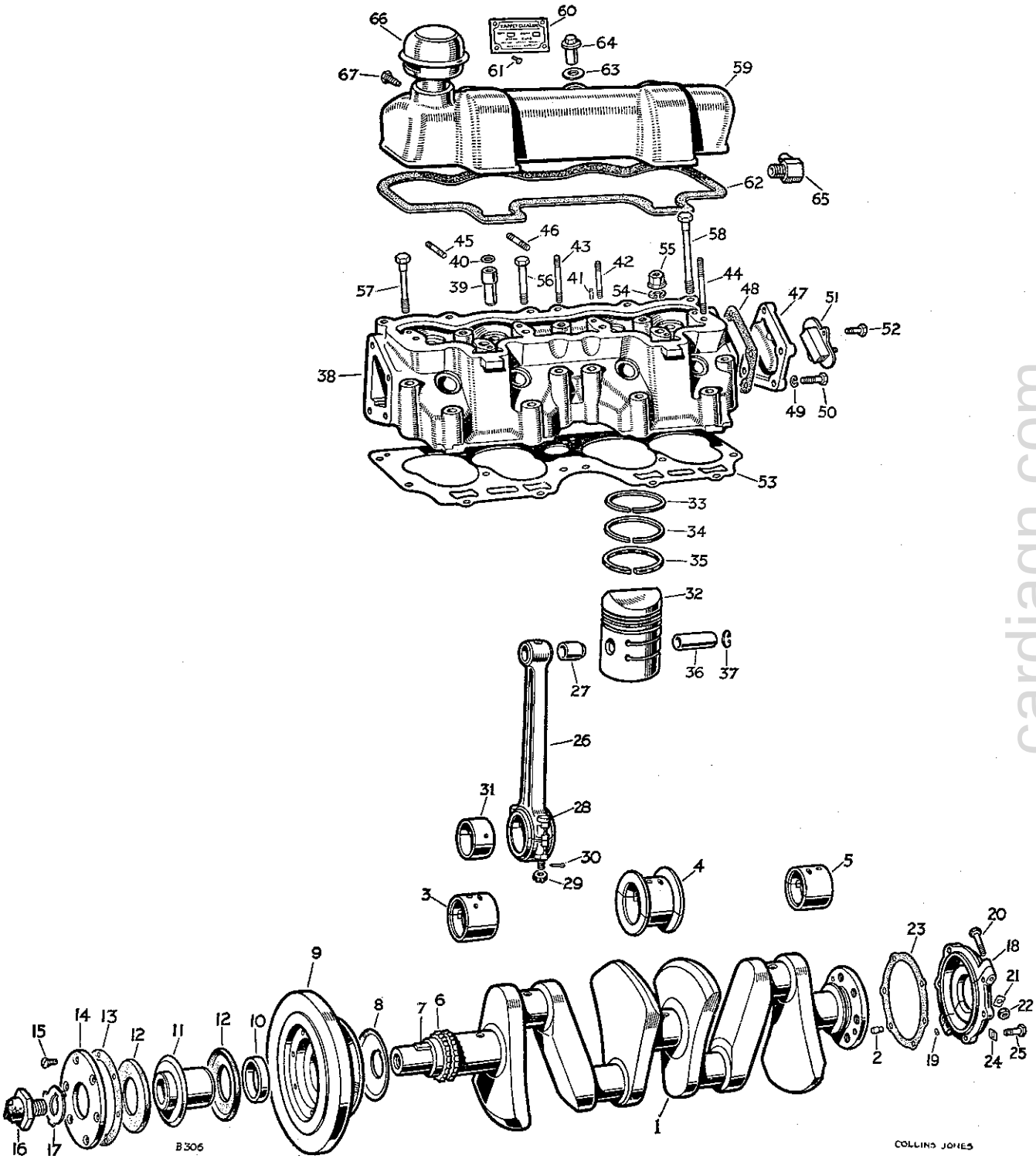

cardiagn.com

CRANKSHAFT AND CYLINDER HEAD

PLATE REF.	1 2 3 4 DESCRIPTION	Qty.	Part No.	REMARKS
45	Stud } For inlet manifold	5	212098	
46	Stud for centre branch } For inlet manifold	4	243531	
	Stud for breather steady } For inlet manifold	1	57126	
47	Rear end cover for cylinder head	1	213810	
48	Joint washer for rear end cover	1	213811	
49	Spring washer } Fixing rear end cover to cylinder head	4	3075	
50	Set bolt ($\frac{5}{16}$" x $\frac{29}{32}$" long) } Fixing rear end cover to cylinder head	4	237161	
51	Thermostat switch for choke warning light	1	213574	
52	Set bolt (2 B.A. x $\frac{13}{32}$" long) } Fixing switch	2	237119	Alternative type, check before ordering
	Set bolt (2 B.A. x $\frac{1}{4}$" long) } Fixing switch	2	3610	Alternative type, check before ordering
53	Cylinder head gasket	1	212322	
54	Spring washer } Fixing cylinder head to cylinder block	2	3077	
55	Special nut } Fixing cylinder head to cylinder block	2	212702	
56	Special set bolt, short } Fixing cylinder head to cylinder block	4	237345	
57	Special set bolt, medium } Fixing cylinder head to cylinder block	4	212334	
58	Special set bolt, long } Fixing cylinder head to cylinder block	6	212333	
59	ROCKER COVER, TOP, ASSEMBLY	1	265331	
60	Tappet clearance plate	1	213245	
61	Drive screw fixing plate	4	73350	
62	Joint washer for top rocker cover	1	267781	
63	Fibre washer } Fixing top rocker cover	3	3055	
64	Special nut } Fixing top rocker cover	3	212278	
	Banjo for breather	1	213887	Engines numbered 860001 to 16102347 and 16131725
	Joint washer, large	1	213889	Engines numbered 860001 to 16102347 and 16131725
	Joint washer, small	1	213890	Engines numbered 860001 to 16102347 and 16131725
	Banjo bolt fixing banjo to rocker cover	1	213888	Engines numbered 860001 to 16102347 and 16131725
65	Breather adaptor complete	1	234613	Engines numbered 16102348 and 16131726 onwards

cardiagn.com

VALVE GEAR

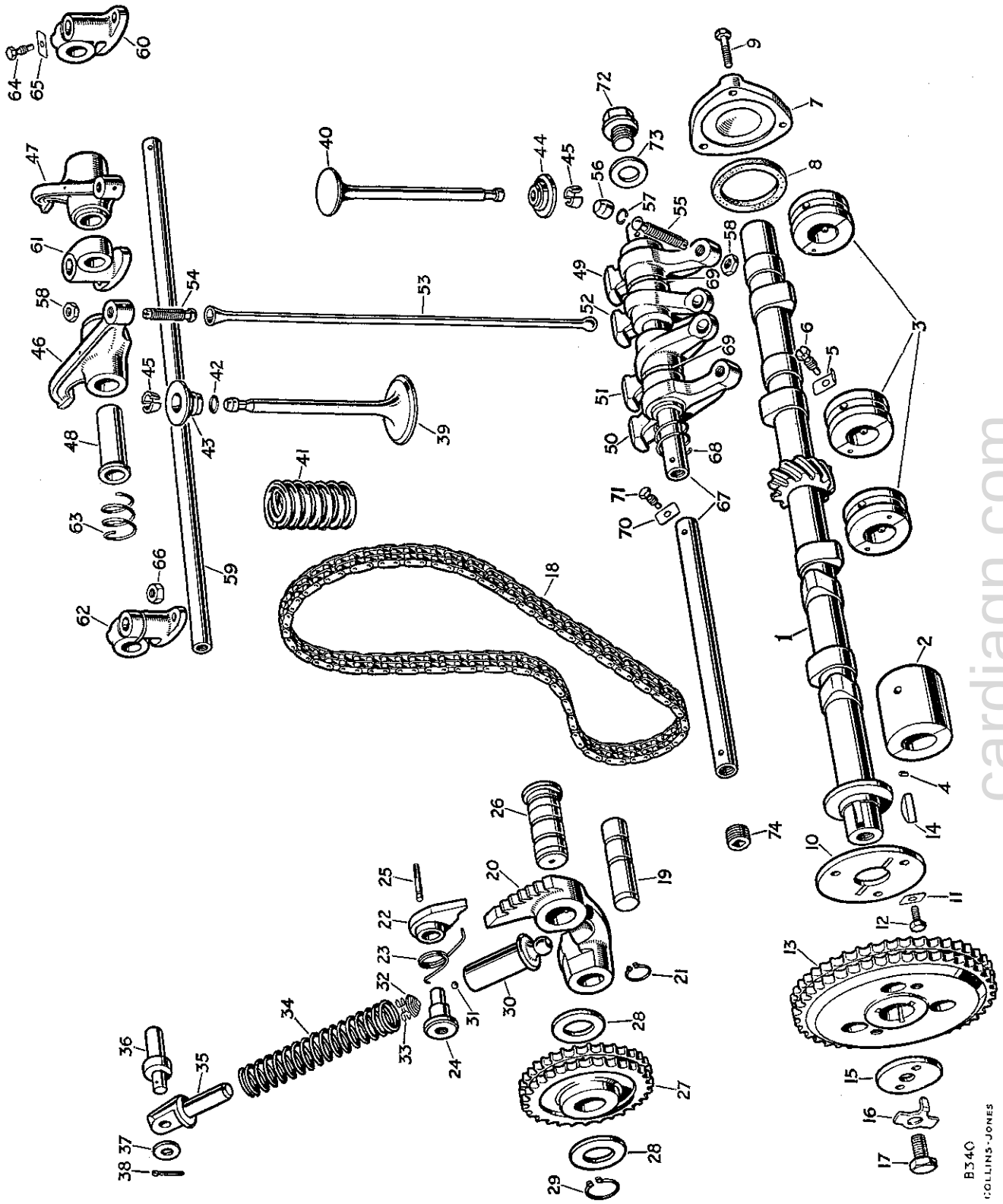

cardiagn.com

VALVE GEAR

PLATE REF.	1 2 3 4 DESCRIPTION	Qty.	Part No.	REMARKS
1	Camshaft	1	269125	511036
2	Bearing complete for camshaft, front	1	09091	
3	Bearing complete for camshaft, centre and rear	3	233072	
4	Dowel for camshaft bearing	8	09208	
5	Locking plate } Fixing camshaft bearings	4	09205	
6	Special set screw } to cylinder block	4	213251	
7	Rear end cover for camshaft	1	219914	
8	Joint washer for cover	1	219913	
9	Set bolt ($\frac{1}{4}''$ x $\frac{3}{4}''$ long) fixing cover to block	3	215054	
10	Thrust plate for camshaft	1	09092	
11	Locker } Fixing thrust plate	3	2500	
12	Set bolt ($\frac{1}{4}''$ x $\frac{3}{4}''$ long) } to cylinder block	3	215054	
13	Chainwheel for camshaft	1	09023	
14	Key locating camshaft chainwheel	1	230313	
15	Retaining washer } Fixing	1	09093	
16	Locker } chainwheel to	1	09210	
17	Set bolt ($\frac{3}{8}''$ x $\frac{11}{32}''$ long) } camshaft	1	215762	
18	Camshaft chain ($\frac{3}{8}''$ pitch x 78 links)	1	09156	
19	Pivot pin for chain adjuster arm	1	212365	
20	Adjuster arm for timing chain	1	212363	
21	Circlip fixing adjuster arm to pivot pin	1	09129	
22	Pawl for tensioner arm	1	213600	
23	Pawl spring	1	213601	
24	Pawl pin	1	213602	
25	Anchor pin for spring	1	214131	
26	Spindle for timing chain adjuster idler wheel	1	212364	
27	Idler wheel for timing chain	1	09075	
28	Steel washer } Fixing idler wheel	2	09126	
29	Circlip } to spindle	1	09128	
30	CYLINDER ASSEMBLY FOR TIMING CHAIN ADJUSTER	1	265331	
31	Steel ball ($\frac{3}{16}''$) for non-return valve	1	3746	
32	Spring retaining ball in cylinder	1	212339	
33	Retainer for steel ball	1	219489	
34	Spring } For timing	1	212340	
35	Piston } chain adjuster	1	219504	
36	Pivot pin for chain adjuster piston	1	212341	
37	Steel washer } Fixing chain adjuster	1	210679	
38	Split pin } piston to pivot pin	1	2555	
	Inlet valve	4	210515	Engines numbered 860001 to 06106719
39	Inlet valve	4	233427	Engines numbered 06106720 onwards
40	Exhaust valve	4	234993	
41	Valve spring, inner and outer	8	217936	
42	Rubber sealing ring for valve, inlet	4	210517	Engines numbered 860001 to 06106719
	Rubber sealing ring for valve, inlet	4	233419	Engines numbered 06106720 onwards
43	Valve spring cup, inlet	4	212136	Engines numbered 860001 to 06106719
	Valve spring cup, inlet	4	212137	Engines numbered 06106720 onwards
44	Valve spring cup, exhaust	4	212137	
45	Split cone for valve, pair	8	09906	

cardiagn.com

VALVE GEAR

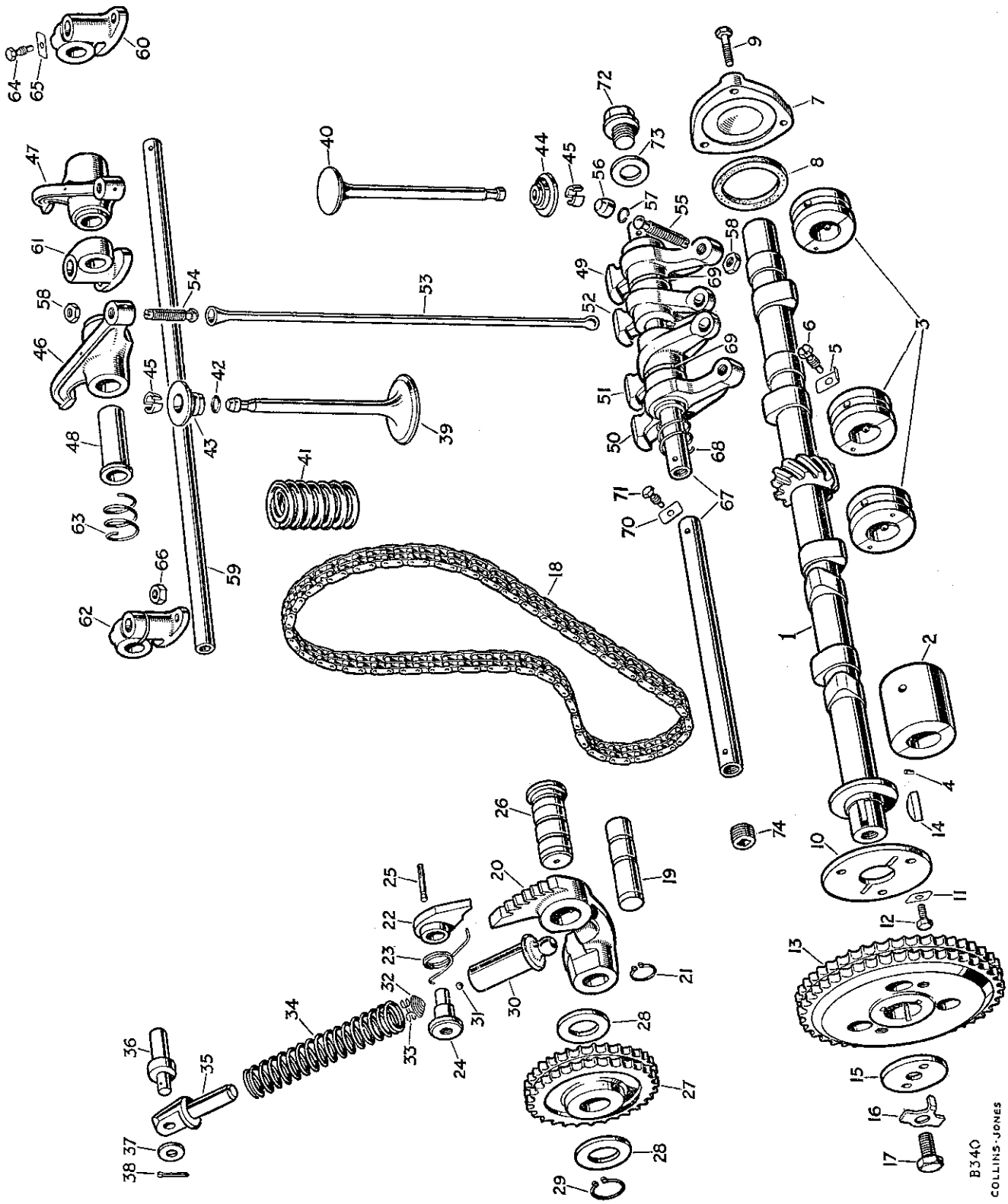

cardiagn.com

VALVE GEAR

PLATE REF.	1 2 3 4 DESCRIPTION	Qty.	Part No.	REMARKS
46	VALVE ROCKER ASSEMBLY, INLET L.H.	2	214351	
47	VALVE ROCKER ASSEMBLY, INLET R.H.	2	214350	
48	Bush for inlet valve rocker	4	214348	
49	Valve rocker, exhaust L.H.	2	239547	
50	Valve rocker, exhaust R.H	2	239546	
51	Inlet cam follower L.H.	2	239545	
52	Inlet cam follower R.H.	2	239544	
53	Tappet push rod, inlet	4	09122	
54	Tappet adjusting screw, inlet	4	236151	
55	TAPPET ADJUSTING SCREW ASSEMBLY, EXHAUST	4	212350	
56	Cap for exhaust tappet adjusting screw	4	212160	
57	Circlip fixing cap	4	212161	
58	Locknut for tappet adjusting screw	8	2842	
59	Valve rocker shaft, top	1	231057	
60	Rocker bracket, oil feed, top	1	212328	
61	Rocker bracket, intermediate, top	2	212329	
62	Rocker bracket, clamping, top	3	212330	
63	Spring for rocker shaft, top	4	09143	
64	Locating screw } For rocker shaft at	1	09004	
65	Locating plate } oil feed bracket	1	09005	
66	Nut ($\frac{5}{16}$") fixing rocket bracket to cylinder head	4	2828	
67	Valve rocker shaft, bottom	2	239089	
68	Spring for rocker shaft, bottom	4	09144	
69	Thrust washer for rocker shaft, bottom	4	09159	
70	Locating plate } Fixing bottom rocker	2	09005	
71	Locating screw } shafts to cylinder block	2	09004	
72	End plug, rear } For	1	3088	
73	Fibre washer for rear plug } bottom rocker	1	3055	
74	End plug, front } shaft	1	12455	

cardiagn.com

COLLINS-JONES

OIL PUMP

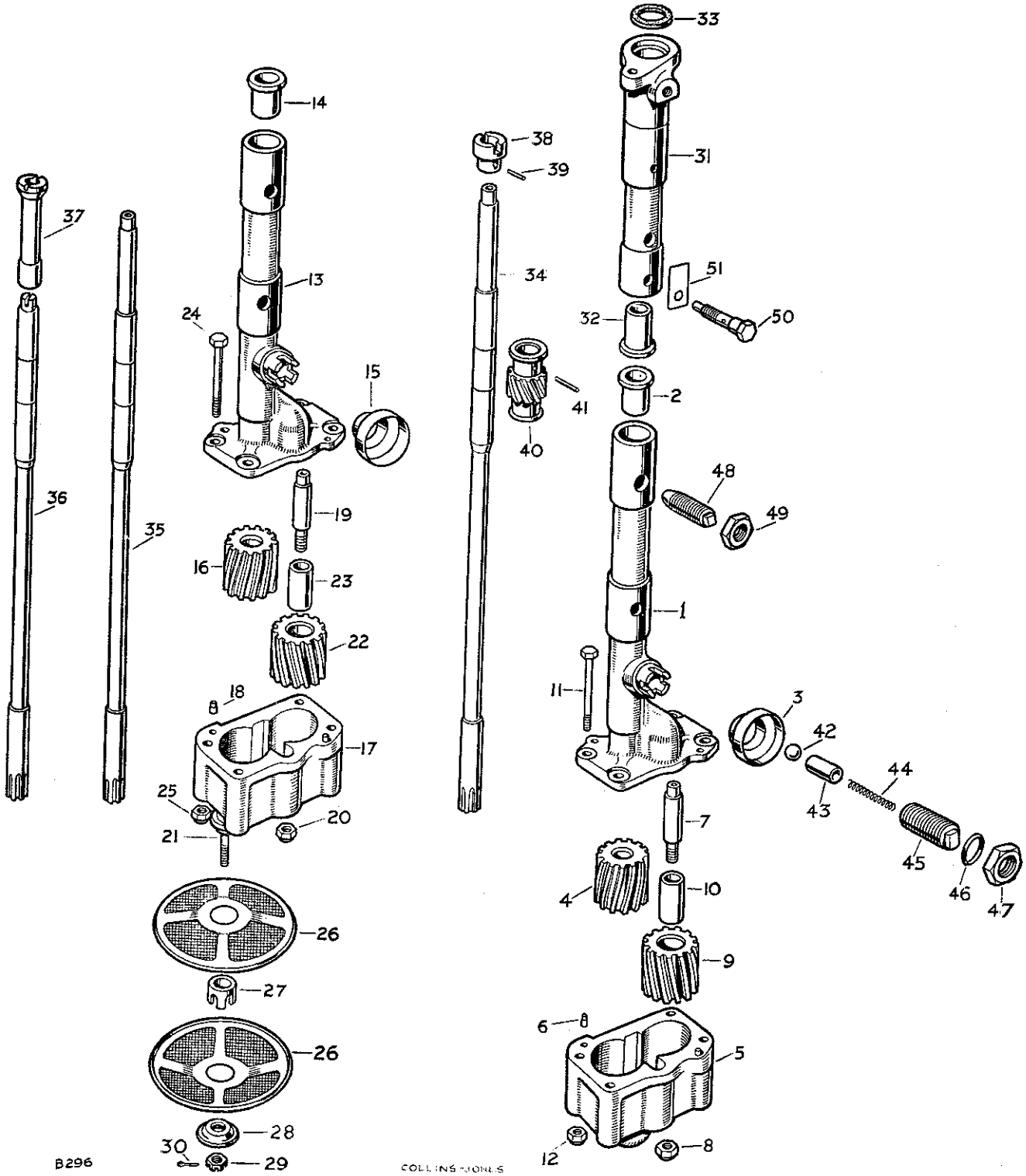

cardiagn.com

OIL PUMP

PLATE REF.	1 2 3 4 DESCRIPTION	Qty.	Part No.	REMARKS
	OIL PUMP ASSEMBLY	1	214989	Engines numbered 860001 to 16102271 and 16131648
1	OIL PUMP BODY ASSEMBLY	1	212373	
2	Bush for drive shaft	1	212309	
3	Oil pump shield	1	09225	
4	Oil pump gear, driver	1	09027	
5	OIL PUMP COVER ASSEMBLY	1	214998	
6	Dowel locating body	2	52710	
7	Spindle for idler wheel	1	09050	
8	Self-locking nut ($\frac{3}{8}$") fixing spindle	1	50526	
9	OIL PUMP IDLER GEAR ASSEMBLY	1	212375	
10	Bush for idler gear	1	09049	
11	Bolt ($\frac{5}{16}$" x $2\frac{13}{32}$" long) Fixing cover	4	215178	
12	Self-locking nut $\frac{5}{16}$(") to body	4	50525	
	OIL PUMP ASSEMBLY	1	234310	Engines numbered 16102272 and 16131649 onwards
13	OIL PUMP BODY ASSEMBLY	1	234312	
14	Bush for drive shaft	1	212309	
15	Oil pump shield	1	09225	
16	Oil pump gear, driver	1	09027	
17	OIL PUMP COVER ASSEMBLY	1	234296	
18	Dowel locating body	2	52710	
19	Spindle for idler wheel	1	09050	
20	Self-locking nut ($\frac{3}{8}$") fixing spindle	1	50526	
21	Stud for oil strainer	1	234291	
22	OIL PUMP GEAR IDLER ASSEMBLY	1	212375	
23	Bush for idler gear	1	09049	
24	Bolt ($\frac{5}{16}$" x $2\frac{1}{2}$" long) Fixing cover	4	250532	
25	Self-locking nut ($\frac{5}{16}$") to body	4	50525	
26	Oil strainer for pump	2	266900	
27	Distance piece for oil strainer	1	52181	
28	Cup washer for strainer	1	52189	
29	Castle nut ($\frac{1}{4}$") Fixing oil strainer	1	251600	
30	Split pin to pump	1	2422	
31	DISTRIBUTOR HOUSING ASSEMBLY	1	214047	
32	Bush for drive shaft	1	09025	
33	Cork washer for housing	1	52278	
34	Oil pump drive shaft	1	09053	Engines numbered 860001 to 16102271 and 16131648
35	Oil pump drive shaft	1	234288	Engines numbered 16102272 and 16131649 to 16105727 and 16134268
36	Oil pump drive shaft	1	235083	Engines numbered 16105728 and 16134269 onwards
37	Drive shaft for distributor	1	267829	
38	Distributor driving dog	1	59050	Engines numbered 860001 to 16105727 and 16134268
39	Taper pin, fixing dog to shaft	1	3005	
40	Oil pump driving gear	1	212308	
41	Taper pin, fixing gear to shaft	1	3005	
42	Steel ball	1	01035	
43	Plunger	1	09038	
44	Spring For oil pressure release	1	07488	
45	Adjusting screw valve	1	09037	
46	Washer	1	230508	
47	Locknut	1	12028	
48	Special set screw Fixing oil pump	1	09039	
49	Locknut to cylinder block	1	2069	
50	Oil feed bolt, locating distributor housing	1	09052	
51	Locker for bolt	1	2504	

cardiagn.com

FRONT COVER, SIDE COVER AND SUMP

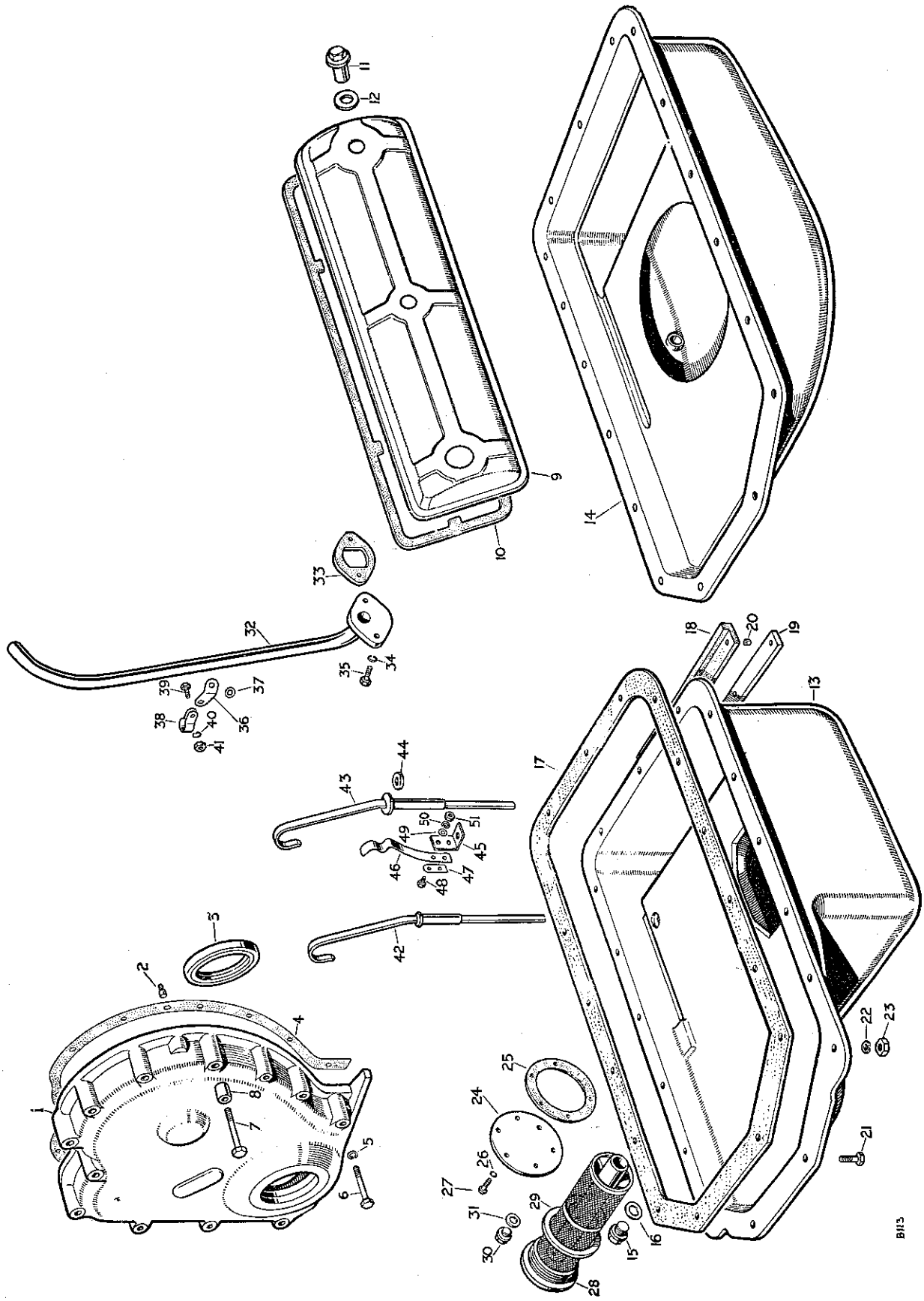

cardiagn.com

FRONT COVER, SIDE COVER AND SUMP

PLATE REF.	1 2 3 4 DESCRIPTION	Qty.	Part No.	REMARKS
1	FRONT COVER ASSEMBLY	1	236018	
2	Dowel, locating front cover	2	6395	
3	Oil seal for front cover	1	213744	
	Mud excluder	1	236011	
	Hammer drive screw fixing excluder	8	3936	
4	Joint washer for front cover	1	09102	
5	Spring washer } Fixing front	11	3075	
6	Set bolt ($\frac{5}{16}$" x $1\frac{29}{32}$" long) } cover and water	10	250530	
7	Set bolt ($\frac{5}{16}$" x $2\frac{3}{16}$" long) } pipe to cylinder	1	250531	
8	Distance piece } block	1	59155	
9	Rocker cover, side	1	216680	
10	Joint washer for rocker cover	1	267779	
11	Special nut fixing side rocker cover	2	216627	
12	Sealing washer for nut	2	242988	
13	Crankcase sump	1	231481	Engines numbered 860001 to 16102271 and 16131648
14	Crankcase sump	1	240789	Engines numbered 16102272 and 16131649 onwards
15	Drain plug for crankcase sump	1	3088	
16	Washer for drain plug	1	230507	
17	Joint washer for crankcase sump	1	09067	
18	Rubber seal } For rear	1	231480	
19	Packing strip } end of	1	231479	Engines numbered 865550 onwards
20	Distance piece } crankcase sump	3	231478	
21	Set bolt ($\frac{5}{16}$" Whit. x $\frac{19}{32}$" long) } Fixing sump	2	215761	
22	Spring washer } to cylinder	17	3075	
23	Nut ($\frac{5}{16}$") } block	15	2828	
24	Cover plate for sump unit hole	1	218498	
25	Joint washer for cover plate	1	56398	
26	Spring washer } Fixing cover	6	3101	Engines numbered 860001 to 16102271 and 16131648
27	Set screw (3 B.A. x $\frac{1}{2}$" long) } plate to sump	6	3100	
28	Oil sump filter complete	1	09071	
29	Washer for filter	1	230510	
30	Plug for redundant hole	1	2147	
31	Join washer for plug	1	215802	
	Breather pipe complete	1	218832	Engines numbered 860001 to 06100279
32	Breather pipe complete	1	232454	Engines numbered 06100280 onwards
33	Joint washer } Fixing	1	214058	
34	Spring washer } breather pipe to	2	3075	
35	Set bolt ($\frac{5}{16}$" x $\frac{13}{16}$" long) } cylinder block	2	237159	
36	Steady bracket for breather pipe	1	218835	
37	Distance washer for bracket	1	2220	
38	Clip for breather pipe steady bracket	1	218913	
39	Bolt (2 B.A. x $\frac{1}{2}$" long) }	1	234603	
40	Spring washer } Fixing clip to bracket	1	3073	
41	Nut (2 B.A.) }	1	2247	
42	Oil level dipstick	1	214766	Engines numbered 860001 to 865713
	Oil level dipstick	1	231845	Engines numbered 865714 to 16102271 and 16131648
43	Oil level dipstick	1	233460	Engines numbered 16102272 and 16131649 onwards
44	Washer for dipstick	1	231848	
45	Bracket for dipstick locking spring	1	231844	
46	Locking spring for dipstick	1	231842	
47	Stiffening plate for locking spring	1	231854	Engines numbered 865714 onwards
48	Bolt (2 B.A. x $\frac{7}{16}$" long) }	2	234603	
49	Plain washer } Fixing spring	2	2678	
50	Spring washer } to bracket	2	3073	
51	Nut (2 B.A.) }	2	2247	

cardiagn.com

OIL FILTER, PIPES AND OIL FILLER

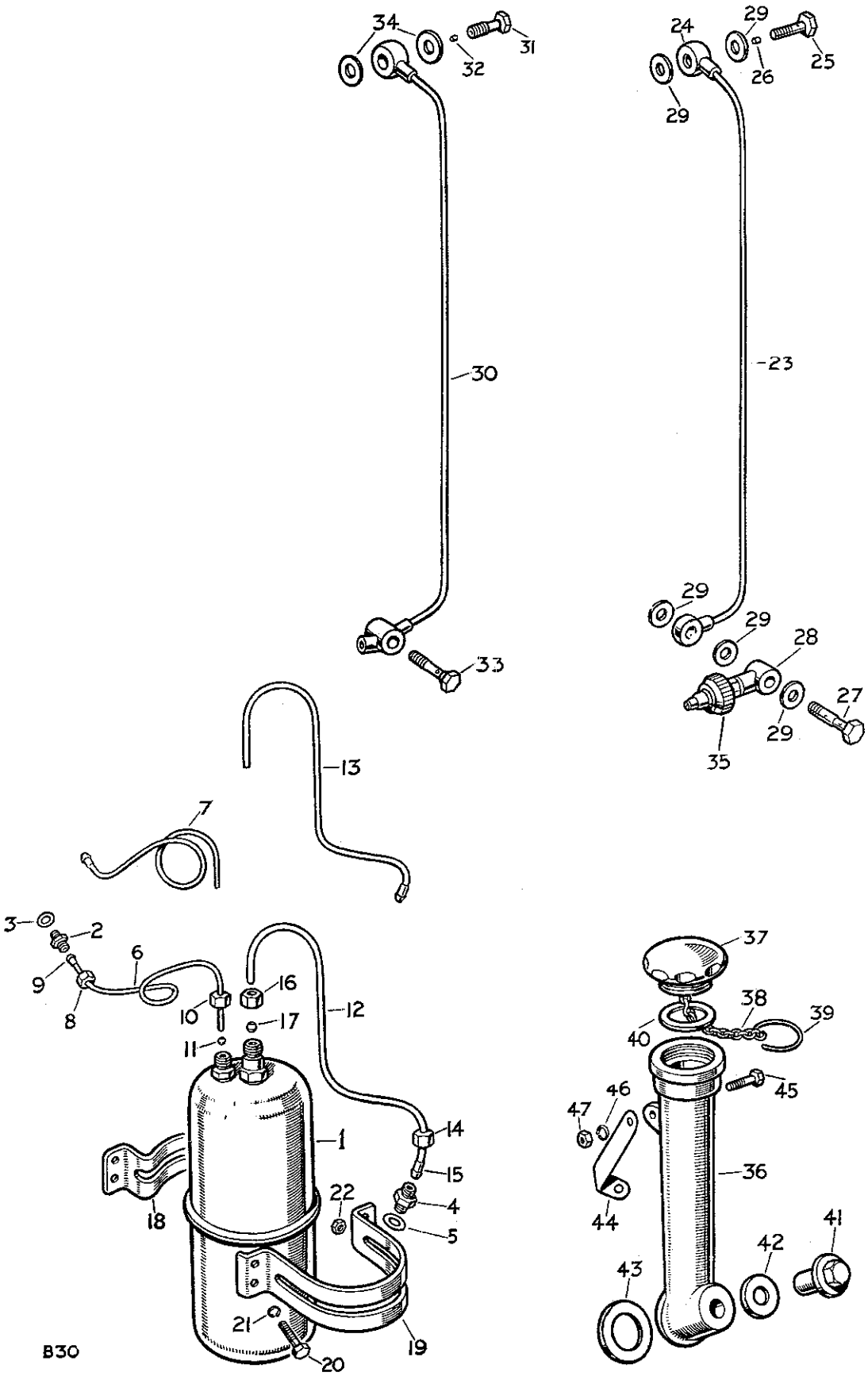

cardiagn.com

OIL FILTER, PIPES AND OIL FILLER

PLATE REF.	1 2 3 4 DESCRIPTION	Qty.	Part No.	REMARKS
1	Oil filter complete	1	216322	
	Inlet union } Oil filter	1	230168	
	Outlet union } end	1	230169	
2	Union for inlet pipe	1	3780	
3	Joint washer for inlet union	1	210640	
4	Union for outlet pipe	1	3057	
5	Joint washer for outlet union	1	215802	
6	Inlet pipe complete for oil filter	1	216348	Engines numbered 860001 to 06112000
7	Inlet pipe complete for oil filter	1	234091	Engines numbered 06112001 onwards
8	Nut }	1	3779	
9	Nipple } For	1	3792	
10	Nut } inlet pipe	1	230171	
11	Olive }	1	230172	
12	Outlet pipe complete for oil filter	1	216350	Engines numbered 860001 to 06112000
13	Outlet pipe complete for oil filter	1	234089	Engines numbered 06112001 onwards
15	Nipple }	1	2728	
14	Nut } For	1	2729	
16	Nut } outlet pipe	1	230170	
17	Olive }	1	230173	
18	Bracket } For	1	214970	
19	Strap } oil filter	1	214971	
20	Set bolt ($\frac{1}{4}''$ x $\frac{5}{8}''$ long) }	4	215053	
21	Spring washer } Fixing oil filter	4	3074	
22	Nut ($\frac{1}{4}''$) }	1	2823	
23	Oil pipe complete to cylinder head	1	213260	
24	Banjo for pipe	2	09187	
25	Banjo bolt, oil pipe to cylinder head	1	265047	
26	Meter plug for banjo union bolt	1	212023	Engines numbered 860001 to 16100645 and 16130654
27	Banjo bolt, oil pipe to cylinder block and switch	1	218046	
28	Adaptor for oil pressure switch	1	218047	
29	Joint washer for banjo centre and adaptor	5	210640	
30	Oil pipe complete to cylinder head	1	267981	
31	Banjo bolt, oil pipe to cylinder head	1	265047	
32	Meter plug for banjo bolt	1	212023	Engines numbered 16100646 and 16130655 onwards
33	Banjo bolt, oil pipe to cylinder block	1	233520	
34	Joint washer for banjo bolts	4	231575	
35	Oil pressure switch complete	1	240526	
36	Oil filler pipe	1	218799	
37	OIL FILLER CAP AND CHAIN ASSEMBLY	1	230268	
38	Retaining chain for oil filler cap	1	230262	
39	Spring ring fixing chain to filler pipe	1	230259	
40	Joint washer for oil filler cap	1	213966	
41	Special nut } Fixing	1	218831	
42	Sealing washer, outer } oil filler pipe and	1	216709	
43	Sealing washer, inner } side rocker cover	1	212173	
44	Bracket for oil filler pipe	1	218828	
45	Bolt ($\frac{1}{4}''$ x $\frac{3}{4}''$ long) } Fixing	1	215054	
46	Spring washer } bracket to	1	3074	
47	Nut ($\frac{1}{4}''$) } oil filler pipe	1	2823	

cardiagn.com

WATER PUMP AND THERMOSTAT

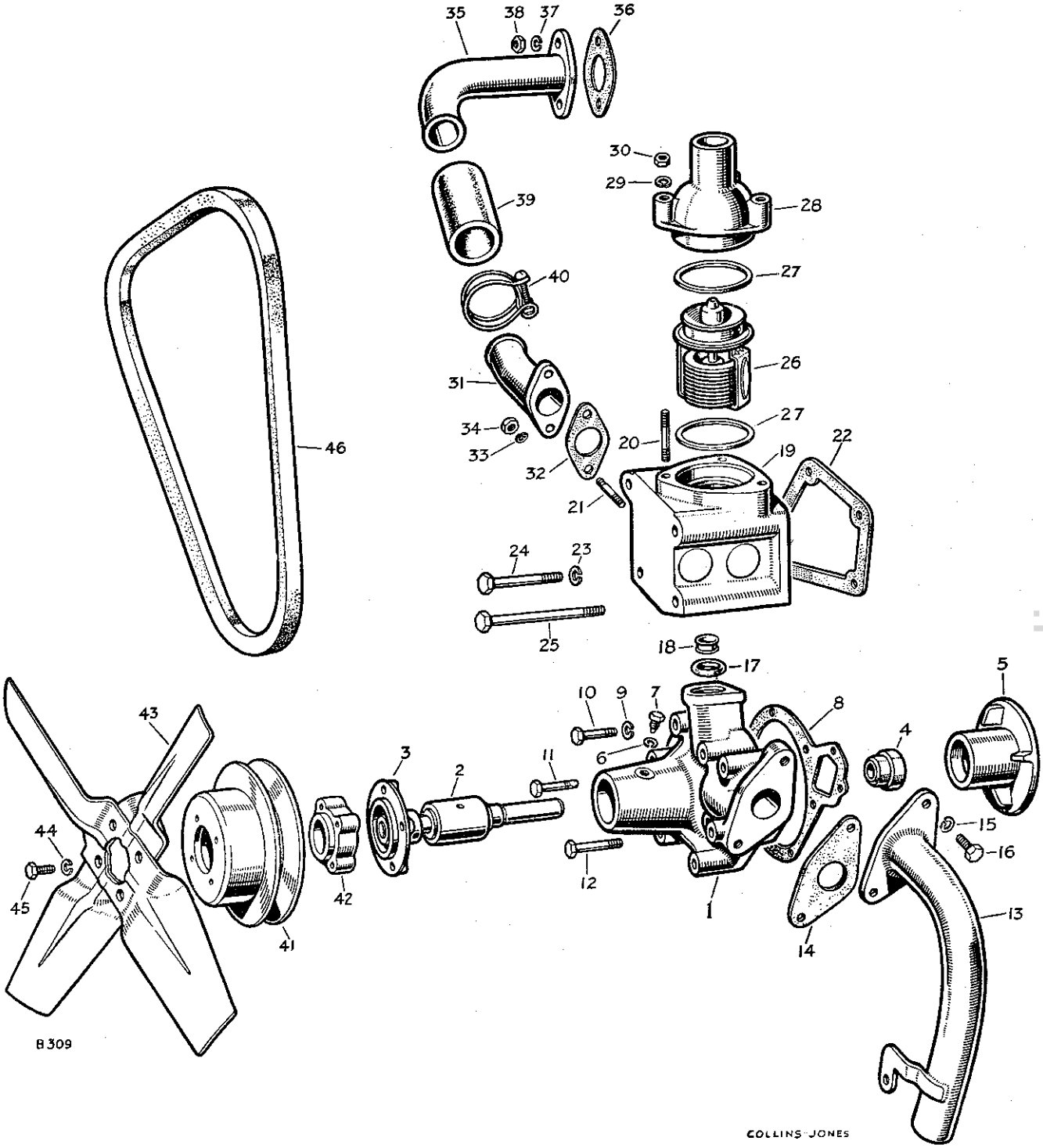

cardiagn.com

WATER PUMP AND THERMOSTAT

PLATE REF.	1 2 3 4 DESCRIPTION	Qty.	Part No.	REMARKS
	WATER PUMP ASSEMBLY	1	241884	
1	Water pump casing complete	1	214789	Complete pump 241884 supplied in lieu
2	Pump spindle and bearing	1	213695	
3	Hub for fan	1	213698	
	Impeller and seal unit	1	268598	
4	Carbon ring and seal unit	1	231143	
5	Impeller for pump	1	233440	Supply 268598 in lieu
6	Spring washer } Locating	1	3074	
7	Set bolt ($\frac{1}{4}$" x $\frac{7}{8}$" long) } bearing casing	1	211064	
8	Joint washer for water pump	1	09118	
9	Spring washer }	8	3074	
10	Set bolt ($\frac{1}{4}$" x $1\frac{1}{2}$" long) } Fixing water pump	6	250517	
11	Set bolt ($\frac{1}{4}$" x $1\frac{3}{4}$" long) } to cylinder block	1	235570	
12	Set bolt ($\frac{1}{4}$" x $2\frac{1}{4}$" long) }	1	237150	
13	Inlet pipe for water pump	1	217272	
14	Joint washer for inlet pipe	1	213724	
15	Spring washer } Fixing pipe to	2	3075	
16	Set bolt ($\frac{5}{16}$" Whit. x $\frac{11}{16}$" long) } water pump	2	215647	
17	Rubber joint ring } Connecting water pump	1	09170	
18	Copper tube } to thermostat housing	1	09197	
	THERMOSTAT HOUSING ASSEMBLY	1	263695	Engines numbered 860001 to 06115160
19	THERMOSTAT HOUSING ASSEMBLY	1	263670	Engines numbered 06115161 onwards
20	Stud for outlet pipe	3	212042	
21	Stud for inlet pipe	2	212104	
22	Joint washer for thermostat housing	1	213811	
23	Spring washer } Fixing	1	3075	
24	Set bolt ($\frac{5}{16}$" x $2\frac{29}{32}$" long) } thermostat housing	1	215180	
	Special stud } to	3	232955	Engines numbered 860001 to 06111605
	Bolt ($\frac{5}{16}$" x $3\frac{11}{16}$" long) } cylinder head	3	215191	Engines numbered 06111606 onwards
26	Thermostat	1	233170	
27	Fibre washer for thermostat	2	01645	
28	Water outlet pipe, thermostat to radiator	1	263607	
29	Spring washer } Fixing outlet pipe	3	3074	
30	Nut ($\frac{1}{4}$") } to thermostat	3	2823	
	Plug, small }	1	3088	} Engines numbered 860001 to 06115160
	Fibre washer, small } Blanking thermostat	1	3055	
	Plug, large } housing	1	10713	
	Fibre washer, large }	1	213961	
31	Water inlet elbow to thermostat	1	263630	
32	Joint washer for inlet elbow	1	210419	
33	Spring washer } Fixing elbow to	2	3074	
34	Nut ($\frac{1}{4}$") } thermostat housing	2	2823	
35	Water outlet pipe from manifold	1	272789	
36	Joint washer for outlet pipe	1	210419	
37	Spring washer } Fixing water outlet pipe	2	3074	
38	Nut ($\frac{1}{4}$") } to manifold	2	2823	
39	Rubber hose } Connecting water pipe	1	212345	
40	Clip for hose } to inlet elbow	2	50320	
	Fan pulley and governor drive	1	218563	Engines numbered 860001 to 06112000

cardiagn.com

WATER PUMP AND THERMOSTAT

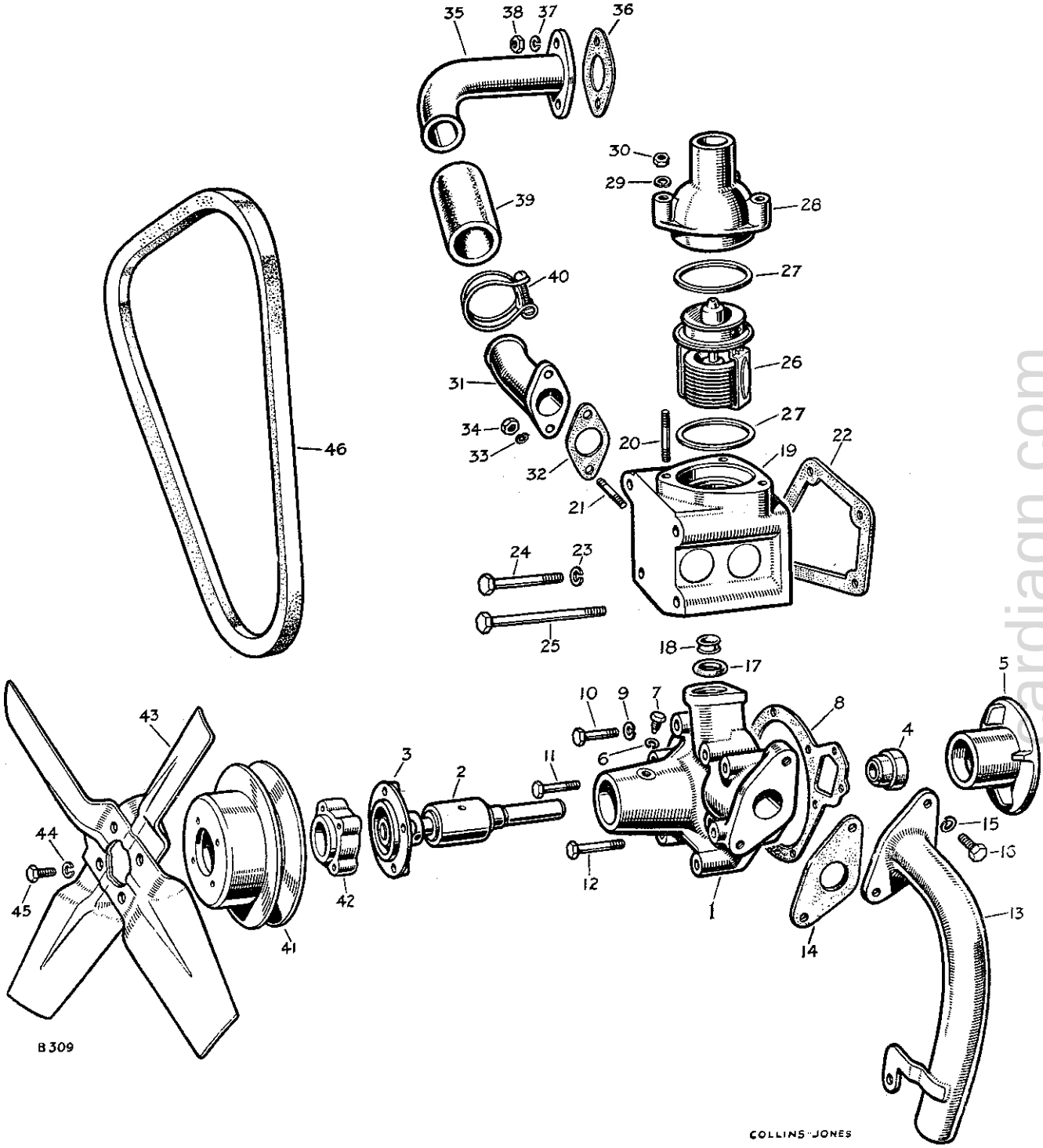

cardiagn.com

WATER PUMP AND THERMOSTAT

PLATE REF.	1 2 3 4	DESCRIPTION	Qty.	Part No.	REMARKS
41	Fan pulley		1	230492	Engines numbered 06112001 onwards
42	Distance piece for fan pulley		1	233802	Engines numbered 06112001 onwards
43	Fan blade		1	218203	
44	Spring washer	Fixing	4	3074	
	Set bolt ($\frac{1}{4}$" x $1\frac{1}{4}$" long)	fan blade and	4	235569	Engines numbered 860001 to 06112000
45	Set bolt ($\frac{1}{4}$" x $1\frac{89}{64}$" long)	pulley to hub	4	250517	Engines numbered 06112001 onwards
46	Fan and dynamo belt		1	218576	

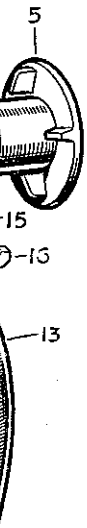

cardiagn.com

CARBURETTOR

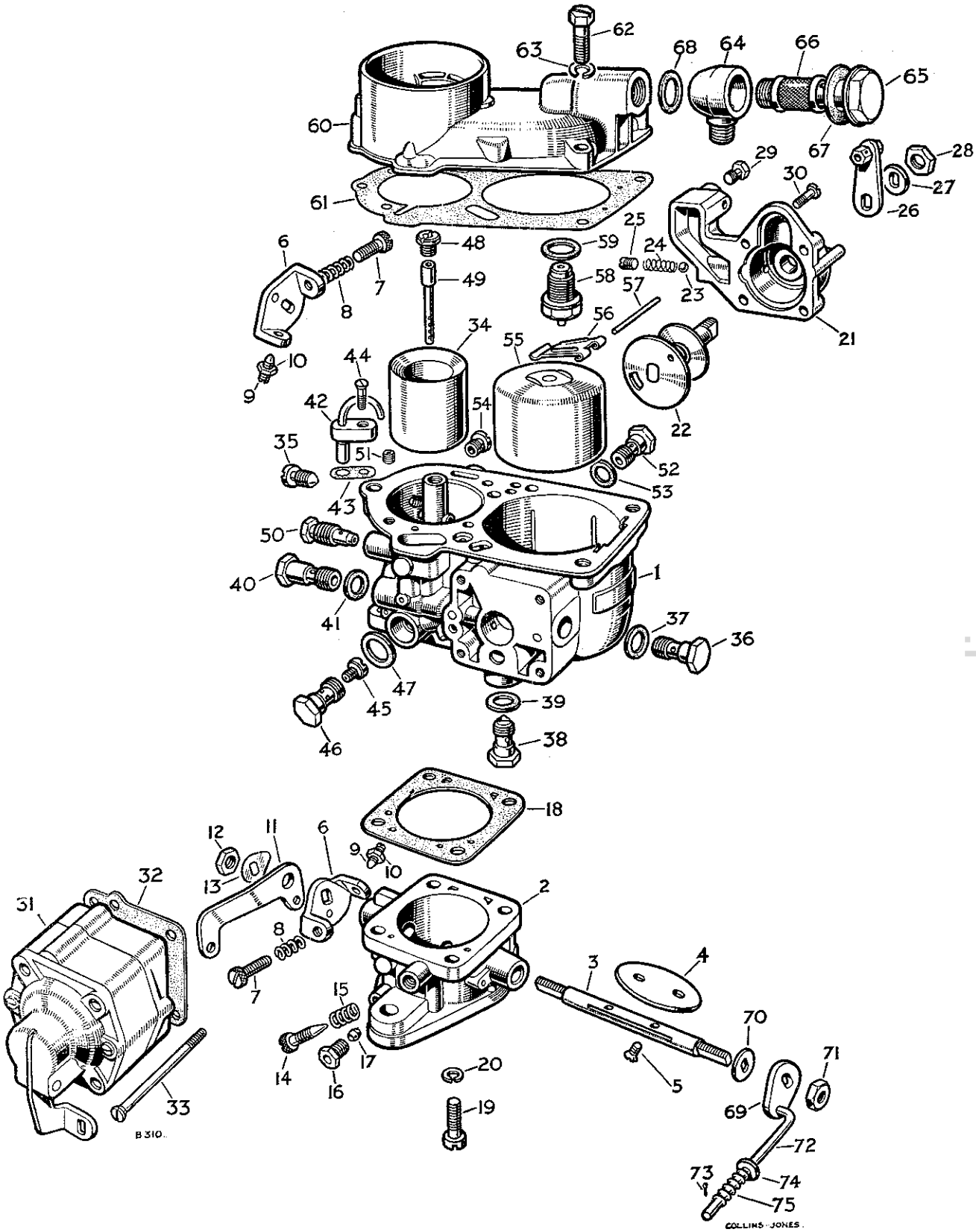

cardiagn.com

CARBURETTOR

PLATE REF.	1 2 3 4 DESCRIPTION	Qty.	Part No.	REMARKS
	CARBURETTOR COMPLETE	1	231275	Carburettor and fittings are not included in the engine assembly
1	Carburettor body only	1	261584	
2	Throttle chamber only	1	260700	
3	Spindle for throttle	1	260702	
4	Butterfly for throttle	1	260704	
5	Special screw fixing butterfly	2	260138	
6	Plate, throttle abutment	1	260139	
7	Special screw } For slow running	1	260140	
8	Spring } adjustment	1	260141	
9	Special screw } For throttle	1	260142	
10	Locknut } stop	1	260143	
	Throttle lever	1	260705*	
11	Throttle lever	1	243920†	
12	Nut fixing throttle lever	1	260159	
13	Lockwasher for nut	1	261594	
14	Special screw } For mixture	1	260146	
15	Spring } control	1	260141	
16	Screwed union } For suction	1	260707	
17	Olive } pipe	1	260708	
18	Joint washer for throttle chamber	1	260754	
19	Special screw } Fixing chamber to	4	261583	
20	Spring washer } carburettor body	4	260148	
21	Starter body	1	261580	
22	Starter valve complete	1	261581	
23	Ball } For starter	1	260155	
24	Spring } valve	1	260156	
25	Plug retaining starter valve spring	1	261508	
26	Lever for starter	1	261582	
27	Special washer for lever	1	261410	
28	Nut fixing starter lever	1	260159	
29	Special bolt fixing starter cable	2	265495	
	Special screw fixing starter body, ¾″ long	4	260157 } Alternative type, check	
30	Special screw fixing starter body, ½″ long	4	262313 } carefully before ordering	
	Accelerator pump complete	1	260735*	
31	Accelerator pump complete	1	261562†	
	Diaphragm for pump	4	243394	
32	Joint washer for pump	1	260739	
33	Special screw fixing pump	4	260737	
34	Choke tube (23)	1	260723	
35	Special screw fixing choke tube	1	260163	
36	Jet economy (50)	1	261420	
37	Fibre washer for jet	1	260734	
38	Non-return valve	1	260765	
39	Fibre washer for valve	1	260734	
40	Jet (50) accelerator pump	1	261421	
41	Fibre washer for jet	1	260734	
42	Pump injector	1	260732	
43	Joint washer for pump injector	1	261570	
44	Special screw fixing injector	1	260767	
	Main jet (102.5)	1	260741*	
45	Main jet (107.5)	1	261563†	

SEE PAGE 31 FOR SUB-STANDARD JETS

* Engines numbered 860001 to 861871, except those fitted with an engine governor.
† Engines numbered 861872 onwards, and all those fitted with an engine governor.

cardiagn.com

CARBURETTOR

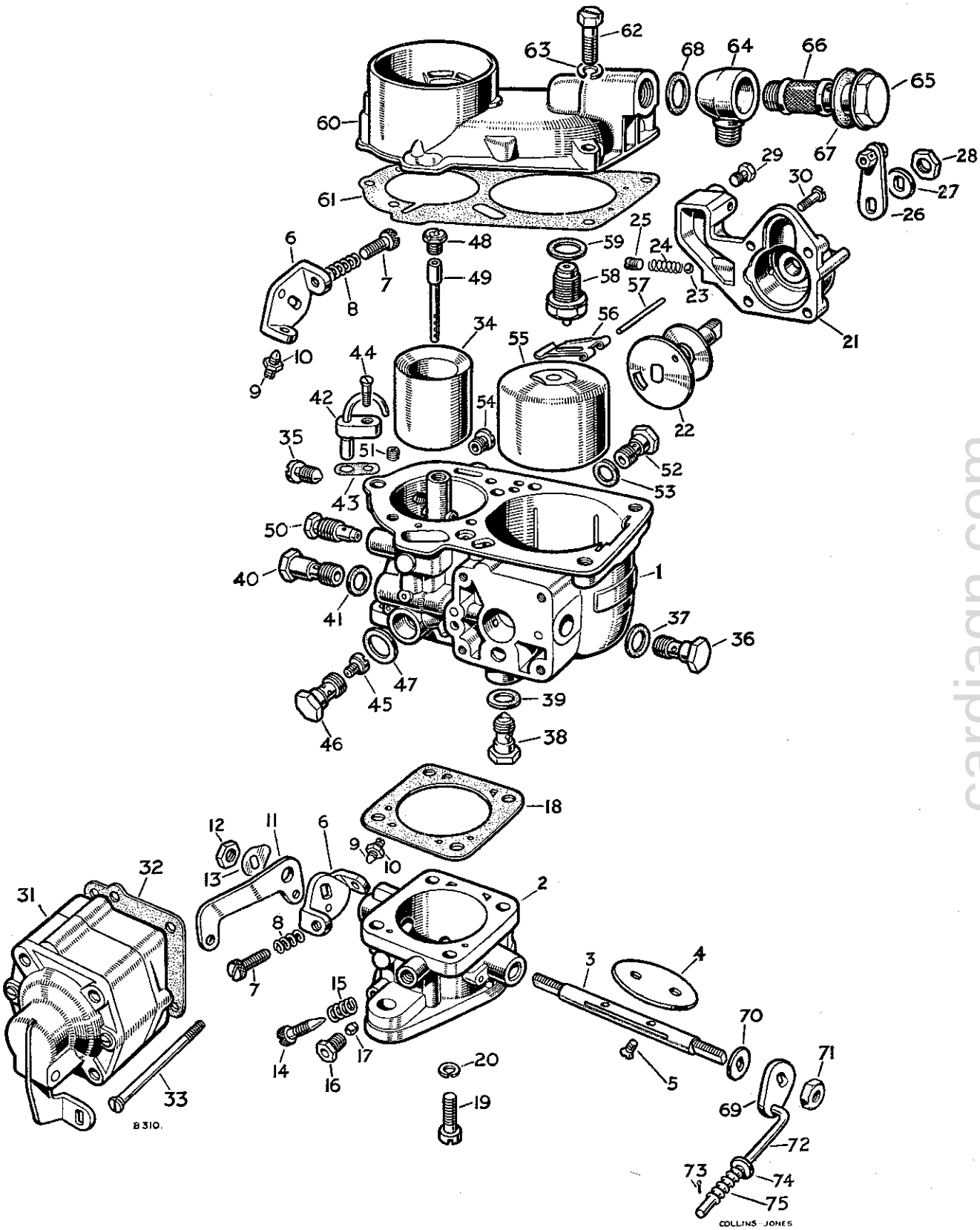

cardiagn.com

CARBURETTOR

PLATE REF.	1 2 3 4 DESCRIPTION	Qty.	Part No.	REMARKS
46	Bolt, main jet carrier	1	260180	
47	Fibre washer for bolt	1	260181	
48	Correction jet (160)	1	260262	
49	Emulsion tube	1	260743	
50	Pilot jet (45)	1	260178	
51	Jet air bleed (150)	1	260179	
52	Starter jet, petrol (135)	1	260752	
53	Fibre washer for jet	1	260734	
54	Starter jet, air (5.5)	1	260719	
55	Float	1	260745	
56	Toggle for float	1	260753	
57	Spindle for toggle	1	260747	
58	Needle valve complete	1	260164	
59	Fibre washer for valve	1	260165	
60	Top cover for carburettor	1	260721	
61	Joint washer for top cover	1	260749	
62	Special screw fixing top cover	3	260751	
63	Spring washer for screw	3	260714	
64	Banjo union	1	260166	
65	Special bolt for union	1	260167	
66	Filter gauze for union	1	260168	
67	Fibre washer, large } For	1	260169	
68	Fibre washer, small } union	1	260170	
	Lever for accelerator pump rod	1	260768*	
69	Lever for accelerator pump rod	1	261564†	
70	Special washer for lever	1	261410	
71	Nut fixing lever to spindle	1	260159	
	Control rod for accelerator pump	1	262697*	
72	Control rod for accelerator pump	1	262312†	
73	Split pin }	2	3359	
74	Plain washer }	2	260771	
75	Spring } For control rod	1	237774	
	Spherical washer }	1	260773	
	Nut }	1	261411	

SUB-STANDARD JETS

Main jet (100)	1	260213	3,000 to 6,000 ft	For use as required
Air bleed jet (2.0)	1	260275		
Main jet (95)	1	260261	6,000 to 10,000 ft	
Air bleed jet (2.0)	1	260275		
Choke tube (24)	1	262687 or	10,000 to 14,000 ft	
Choke tube (25)	1	262659		
Main jet (95)	1	260261		
Air bleed jet (2.0)	1	260275		
Correction jet (170)	1	260175		
Main jet (100)	1	260213	Tropical conditions	

* Engines numbered 860001 to 861871, except those fitted with an engine governor.
† Engines numbered 861872 onwards and all those fitted with an engine governor.

cardiagn.com

MANIFOLDS

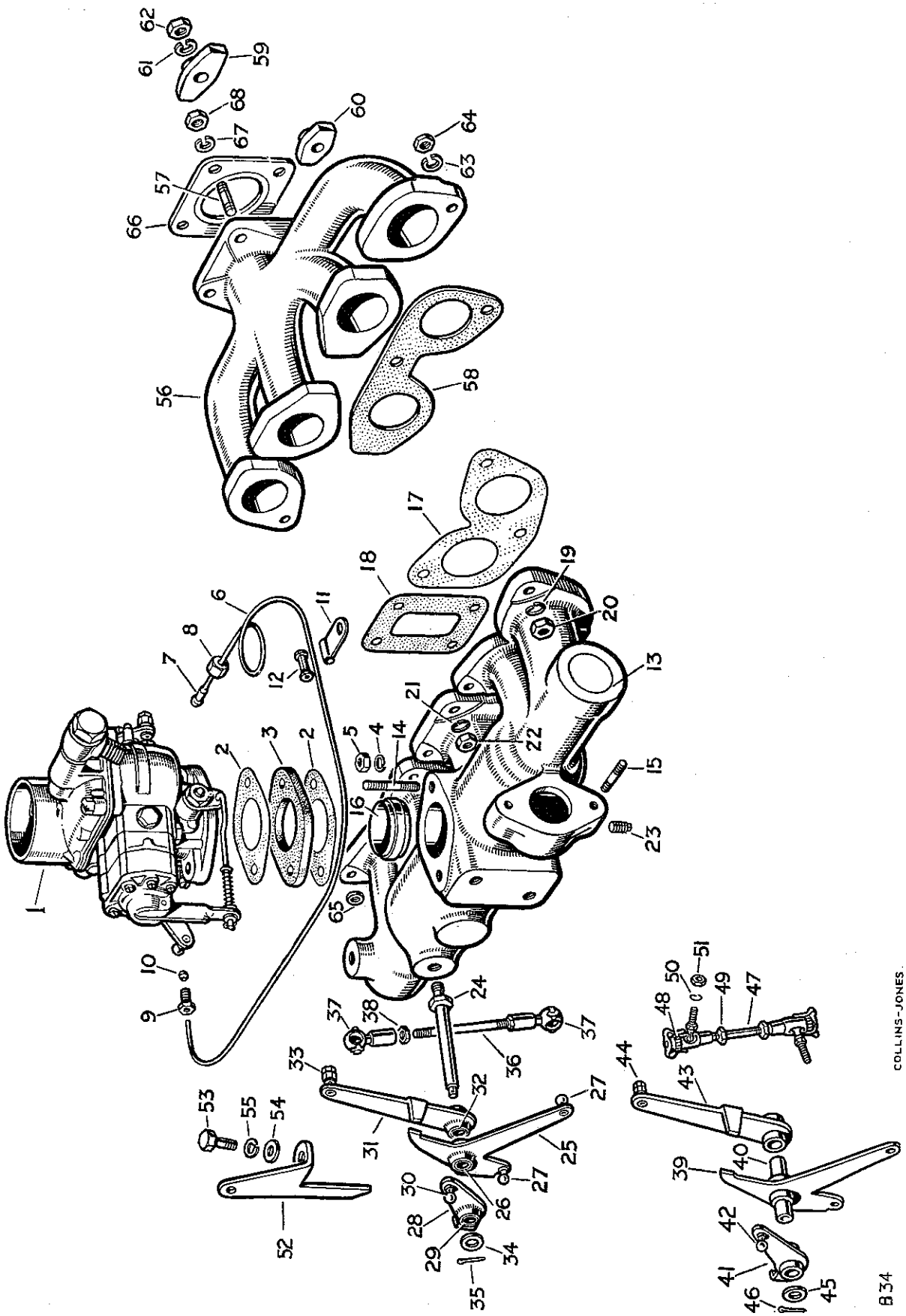

cardiagn.com

MANIFOLDS

PLATE REF.	1 2 3 4 DESCRIPTION	Qty.	Part No.	REMARKS
1	CARBURETTOR COMPLETE	1	231275	For component parts, see Pages 29 and 31
2	Joint washer for carburettor	2	212233	
3	Packing for carburettor	1	212232	
4	Spring washer } Fixing carburettor	2	3075	
5	Nut ($\frac{5}{16}$") } to manifold	2	2828	
6	Suction pipe complete, carburettor to distributor	1	214231	
7	Nipple } For suction pipe,	1	3787	
8	Nut } distributor end	1	3783	
9	Screwed union } For suction pipe,	1	260707	
10	Olive } carburettor end	1	260708	
11	Clip for suction pipe	1	214228	
12	Rubber grommet for clip	1	214229	
13	INLET MANIFOLD ASSEMBLY	1	218954	
14	Stud for carburettor	2	214054	
15	Stud for water outlet pipe	2	212104	
16	Dowel ring for carburettor	1	214019	
17	Joint washer, manifold to cylinder head	2	09179	
18	Joint washer, water branch to cylinder head	1	210447	
19	Spring washer } Fixing manifold	6	3075	
20	Nut ($\frac{5}{16}$") } to cylinder head	6	2828	
21	Spring washer } Fixing water branch	4	3074	
22	Nut ($\frac{1}{4}$") } to cylinder head	4	2823	
23	Plug for manifold	1	3289	
24	Spindle for carburettor bell crank and levers	1	219499	
25	CARBURETTOR BELL CRANK ASSEMBLY	1	219643	Engines numbered 860001 to 861871, except those fitted with an engine governor
26	Bush } For	1	219500	
27	Ball end } bell crank	2	1481	
28	CARBURETTOR RELAY LEVER ASSEMBLY	1	219642	
29	Bush } For	1	219500	
30	Ball end } relay lever	1	1481	
31	HAND THROTTLE LEVER ASSEMBLY	1	219641	
32	Bush for throttle lever	1	219500	
33	Swivel clamp for wire	1	219582	
34	Plain washer } Fixing bell crank and	1	2210	
35	Split pin } levers to spindle	1	2392	
36	Rod, bell crank to carburettor	1	219502	
37	Ball socket } For throttle	2	1659	
38	Locknut (2 B.A.) } control rod	2	2247	

cardiagn.com

MANIFOLDS

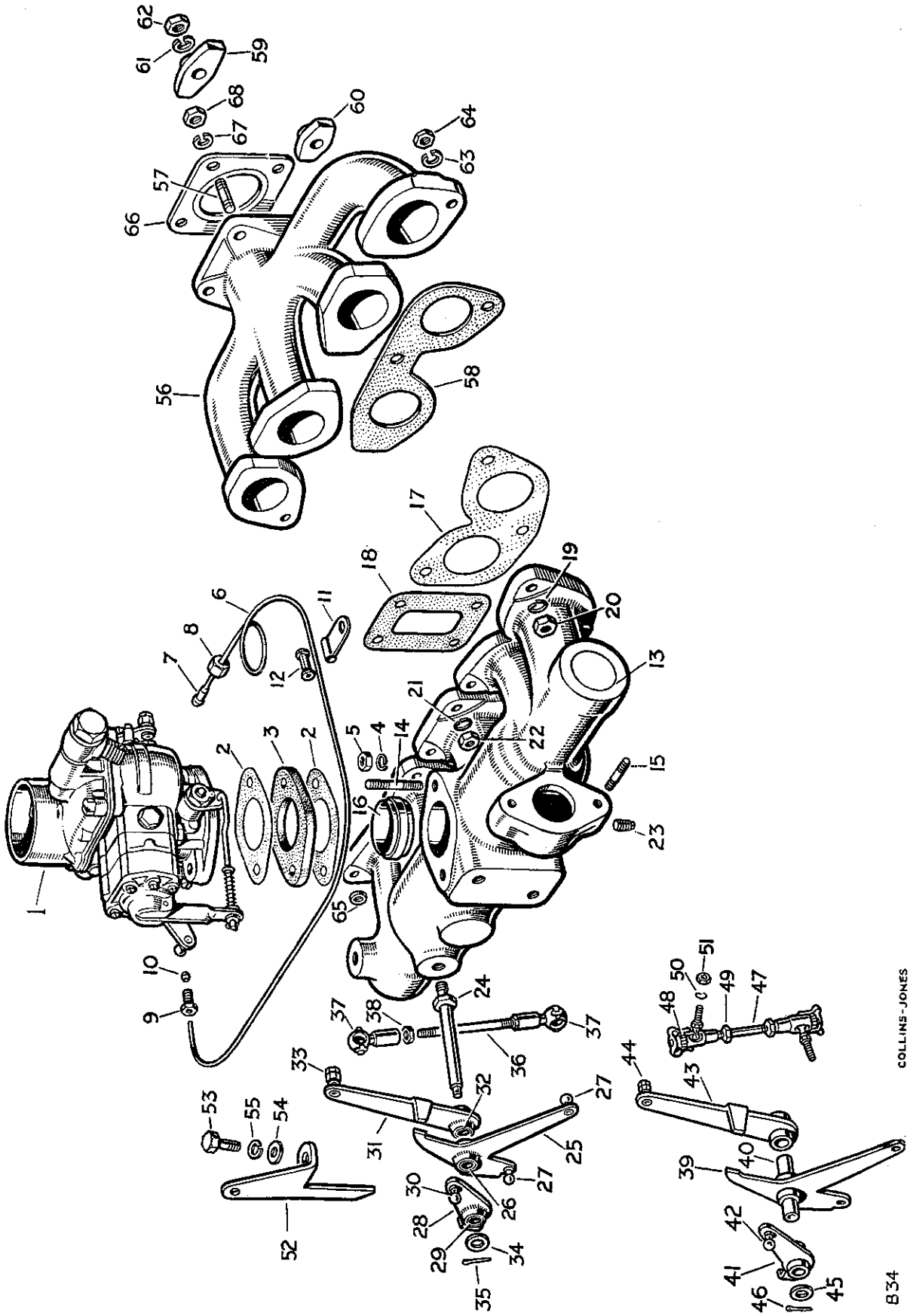

cardiagn.com

MANIFOLDS

PLATE REF.	1 2 3 4 DESCRIPTION	Qty.	Part No.	REMARKS
39	CARBURETTOR BELL CRANK ASSEMBLY	1	231289	Engines numbered 861872 onwards, and all those fitted with an engine governor
40	Bush for levers	1	231290	
41	CARBURETTOR RELAY LEVER ASSEMBLY	1	231291	
42	Ball end for lever	1	1481	
43	HAND THROTTLE LEVER ASSEMBLY	1	231292	
44	Swivel clamp for wire	1	219582	
45	Plain washer } Fixing bell crank and	1	2210	
46	Split pin } levers to spindle	1	2392	
47	ROD ASSEMBLY, BELL CRANK TO CARBURETTOR	1	231267	
48	Ball joint complete	2	231261	
49	Locknut ($\frac{1}{4}$") for ball joint	2	2823	
50	Spring washer } Fixing rod to bell crank	2	3074	
51	Nut ($\frac{1}{4}$") } and carburettor	2	2823	
52	Abutment bracket for hand throttle	1	219507	
53	Set bolt ($\frac{5}{16}$" Whit. x $\frac{11}{16}$" long) } Fixing abutment	1	215647	
54	Plain washer } bracket to	1	2550	
55	Spring washer } manifold	1	3075	
56	EXHAUST MANIFOLD ASSEMBLY	1	216548	
57	Stud for exhaust pipe	4	213472	
58	Joint washer for exhaust manifold	2	09184	
59	Clamp, centre } For exhaust	1	09162	
60	Clamp, outer } manifold	2	09161	
61	Spring washer } For exhaust	3	3076	
62	Nut ($\frac{3}{8}$") } manifold clamps	3	2827	
63	Spring washer } Fixing ends of	2	3075	
64	Nut ($\frac{5}{16}$") } exhaust manifold	2	2828	
65	Distance piece at oil filler bracket	1	56375	
66	Joint washer for exhaust pipe	1	213358	
67	Spring washer } Fixing pipe	4	3075	
68	Nut ($\frac{5}{16}$") } to manifold	4	3771	

cardiagn.com

DISTRIBUTOR AND STARTER

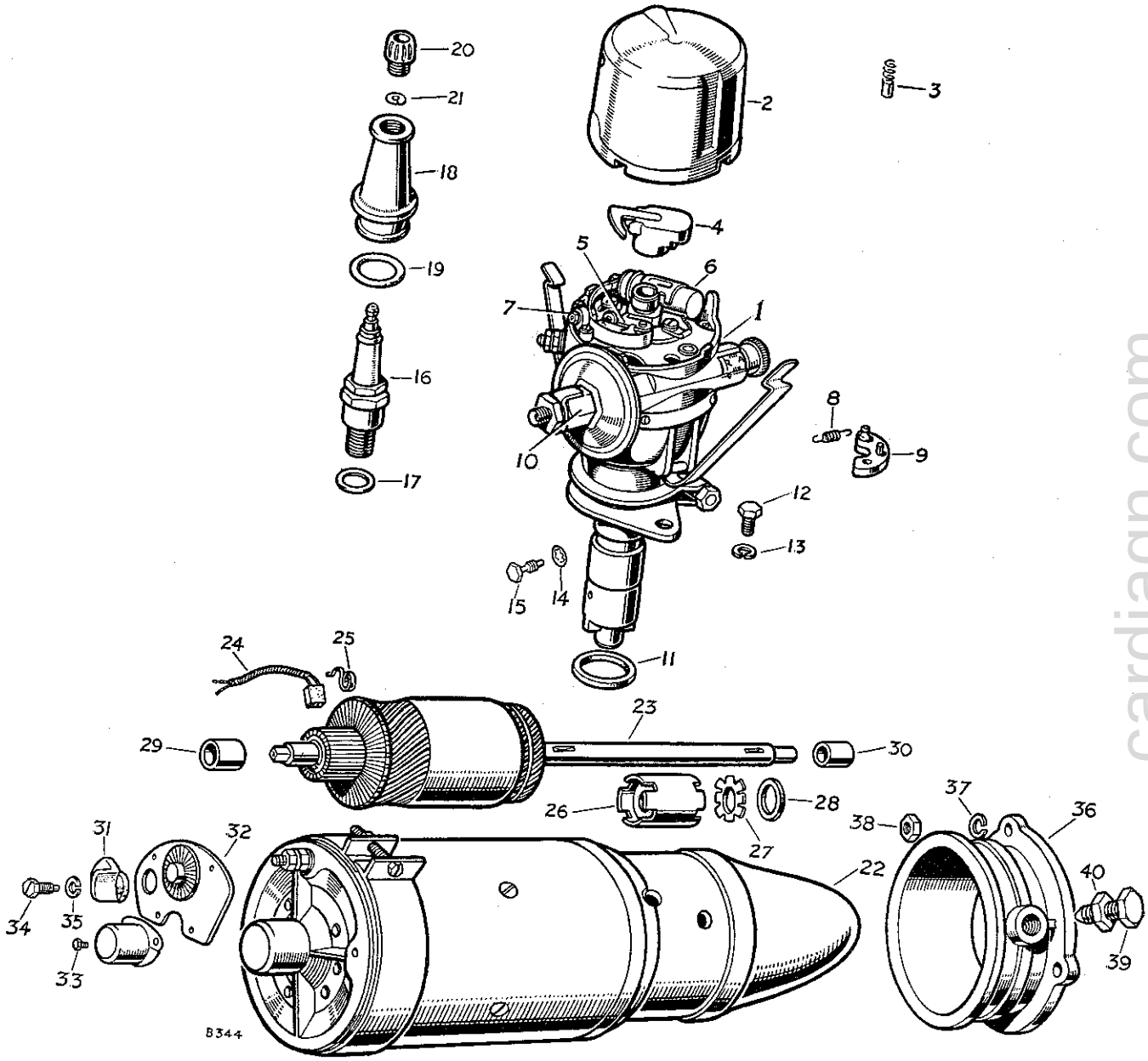

cardiagn.com

DISTRIBUTOR AND STARTER

PLATE REF.	1 2 3 4 DESCRIPTION	Qty.	Part No.	REMARKS
1	Distributor complete	1	217530	
2	Distributor cap complete	1	261240	
3	Brush and spring for cap	1	261241	
4	Rotor arm	1	261242	
5	Contact breaker points, set	1	260073	
6	Condenser for distributor	1	260070	
7	Bridge insulation fo contact breaker	1	261244	
8	Auto advance springs, set	1	261487	
9	Auto advance weight	2	261846	
10	Vacuum unit	1	261489	
	Adjusting screw for distributor	1	243584	
	Spring and washer for adjusting screw	1	243585	
11	Cork washer for distributor housing	1	52278	
12	Special set bolt } Fixing	1	215758	
13	Spring washer } distributor lever	1	3074	
14	Shakeproof washer } Fixing distributor	1	70822	Engines numbered 860001 to 16101154 and 16130774
15	Special set bolt } in housing	1	05794	Engines numbered 860001 to 16101154 and 16130774
16	Sparking plug	4	262796	
	Suppressor for sparking plug	4	240138	
17	Washer for sparking plug	4	40441	
18	Sparking plug cover	4	214262	
19	Rubber sealing ring for cover	4	213172	
20	Cable nut	4	214278	
21	Washer for cable nut	4	214279	
	H.T. wire	As required	80603	
22	Starter motor complete	1	231947	
	Field coil for starter	1	262861	
	Bracket for starter, commutator end	1	244706	
	Plate, transmission for starter	1	262926	
23	Armature for starter	1	262103	
24	Brushes for starter motor, set	1	260055	
25	Spring set for brushes	1	261239	
26	Bendix drive sleeve assembly	1	260046	
	Bendix drive for starter	1	260029	
	Spring for bendix drive	1	262969	
27	Star washer } For	1	261505	
28	Fibre washer } bendix drive	1	261506	
	Internal star washer for starter	1	243272	
29	Bush, commutator end } For	1	242958	
30	Bush, pinion end } starter	1	260092	
	Sundry parts kit	1	244718	
31	Rubber insulator for cable end	1	260079	Engines numbered 860001 to 862234
32	Adaptor plate for starter motor	1	06230	Engines numbered 860001 to 862234
33	Special screw } Fixing	4	3360	Engines numbered 860001 to 862234
34	Special set bolt } adaptor plate and	1	3537	Engines numbered 860001 to 862234
35	Spring washer } starter cable	1	3075	Engines numbered 860001 to 862234
36	Housing for starter	1	09084	
37	Spring washer } Fixing housing to	3	3076	
38	Nut (⅜") } flywheel housing	3	2827	
	Cable clip for starter lead	1	3551	
39	Special bolt locating starter in housing	1	10841	
40	Locknut for special bolt	1	2094	

cardiagn.com

DYNAMO AND FIXINGS

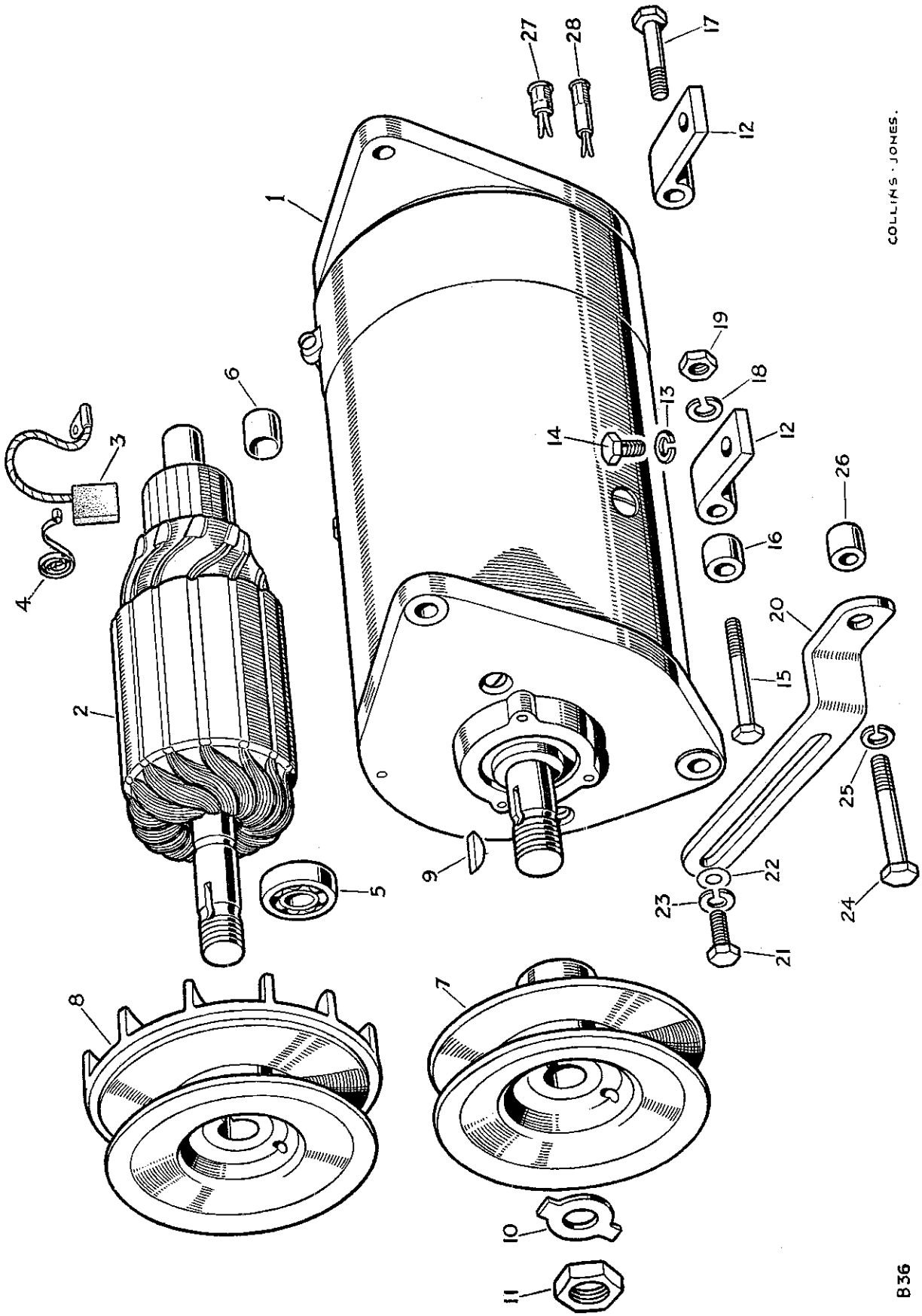

cardiagn.com

DYNAMO AND FIXINGS

PLATE REF.	1 2 3 4 DESCRIPTION	Qty.	Part No.	REMARKS
1	Dynamo complete	1	235552	
2	Armature for dynamo	1	262085	
	Field coil for dynamo	1	262860	
3	Brushes for dynamo, set	1	261483	
4	Spring set for brushes	1	261238	
5	Ball bearing } For	1	242672	
6	Bush } dynamo	1	262929	
8	Pulley for dynamo	1	232840	Engines numbered 860001 to 16106948 and 16135078
	Pulley for dynamo	1	236360	Engines numbered 16106949 and 16135079 onwards
9	Woodruff key } Fixing	1	240270	
10	Lock washer } pulley to	1	217781	
11	Special nut } dynamo	1	240271	
12	Support bracket for dynamo	2	210572	
13	Spring washer } Fixing support bracket	2	3075	
14	Set bolt ($\frac{5}{16}$" x $\frac{13}{16}$" long) } to cylinder block	2	237159	
15	Bolt ($\frac{5}{16}$" x $2\frac{13}{32}$" long), front	1	237333	
16	Distance piece, front	1	217780	
17	Bolt ($\frac{5}{16}$" x $1\frac{1}{2}$" long), rear	1	215169	Engines numbered 860001 to 06106531
	Bolt ($\frac{5}{16}$" x $1\frac{19}{32}$" long), rear } Fixing dynamo to	1	237329	Engines numbered 06106532 onwards
18	Spring washer } anchor brackets	1	3075	2 off from engines numbered 06106532 onwards
19	Nut ($\frac{5}{16}$")	1	2828	
	Self-locking nut ($\frac{5}{16}$")	1	50525	
20	Adjusting link for dynamo	1	217767	
21	Special set bolt } Fixing	1	233568	
22	Plain washer } adjusting link	1	3868	
23	Spring washer } to dynamo	1	3075	
24	Set bolt ($\frac{5}{16}$" x $2\frac{5}{16}$" long) } Fixing	1	250531	
25	Spring washer } adjusting link to	1	3075	
26	Distance piece } cylinder block	1	210566	
	Spring clip for dynamo lead	1	3619	
27	Terminal (yellow) for dynamo	1	261935	Early models only
28	Terminal (black) for dynamo	1	261842	

cardiagn.com

FLYWHEEL AND CLUTCH, ROVER TYPE

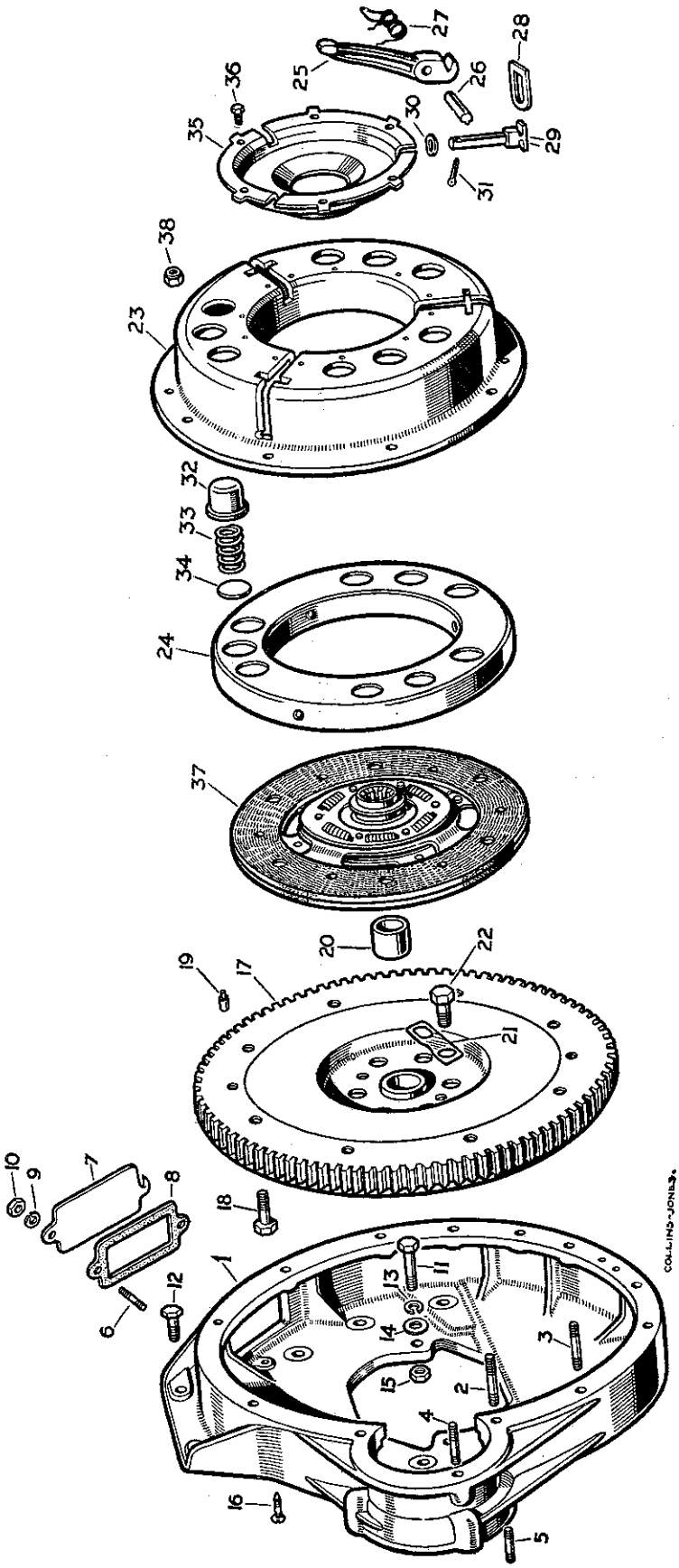

FLYWHEEL AND CLUTCH, ROVER TYPE

PLATE REF.	1 2 3 4 DESCRIPTION	Qty.	Part No.	REMARKS
1	FLYWHEEL HOUSING ASSEMBLY	1	212369	
2	Stud, long ($\frac{3}{8}''$) } Fixing	2	55778	
3	Stud, short ($\frac{3}{8}''$) } flywheel housing to	10	3650	
4	Stud ($\frac{5}{16}''$) } bell housing	1	3200	
5	Stud ($\frac{3}{8}''$) fixing starter housing	3	52171	
6	Stud ($\frac{1}{4}''$) fixing inspection cover	2	3651	
7	Inspection cover plate	1	56140	
8	Joint washer for cover plate	1	50216	
9	Spring washer } Fixing	2	3074	
10	Nut ($\frac{1}{4}''$) } cover plate	2	2823	
11	Special bolt }	6	250542	
12	Special set bolt }	2	215272	
13	Spring washer } Fixing flywheel housing	8	3076	
14	Plain washer } to cylinder block	6	2219	
15	Nut ($\frac{3}{8}''$) }	6	2827	
16	Indicator pin for engine timing	1	09085	
17	FLYWHEEL ASSEMBLY	1	212381	
	Ring gear for flywheel	1	232404	
18	Special fitting bolt, fixing clutch cover plate	8	266466	
19	Dowel, locating clutch cover plate	2	56083	
20	Bush for primary pinion	1	08566	
21	Locker } Fixing flywheel	3	3674	
22	Special set bolt } to crankshaft	6	210211	
	CLUTCH ASSEMBLY	1	214790	
23	Cover plate for clutch	1	02589	
24	Pressure plate for clutch	1	02336	
25	Operating lever	3	02590	
26	Fulcrum pin for lever	3	07865	
27	Return spring for lever	3	07652	
28	Operating link for lever	3	02585	Engines numbered 860001 to 06100200
29	Driving bolt } Connecting	3	219629	
30	Curved washer } links to clutch	3	02587	
31	Split pin } pressure plate	3	2395	
32	Retaining cup for clutch spring	9	216601	
33	Clutch spring (130 lbs.) orange	9	216600	
34	Insert for clutch spring	9	05891	
35	Oil excluder	1	213408	
36	Set bolt fixing excluder	6	3610	
37	Clutch plate complete	1	217179	
	Lining package for clutch plate	1	261609	
	Rivet for lining	16	261611	
38	Self-locking nut ($\frac{5}{16}''$) fixing clutch cover plate	8	50525	

FLYWHEEL AND CLUTCH, BORG AND BECK TYPE

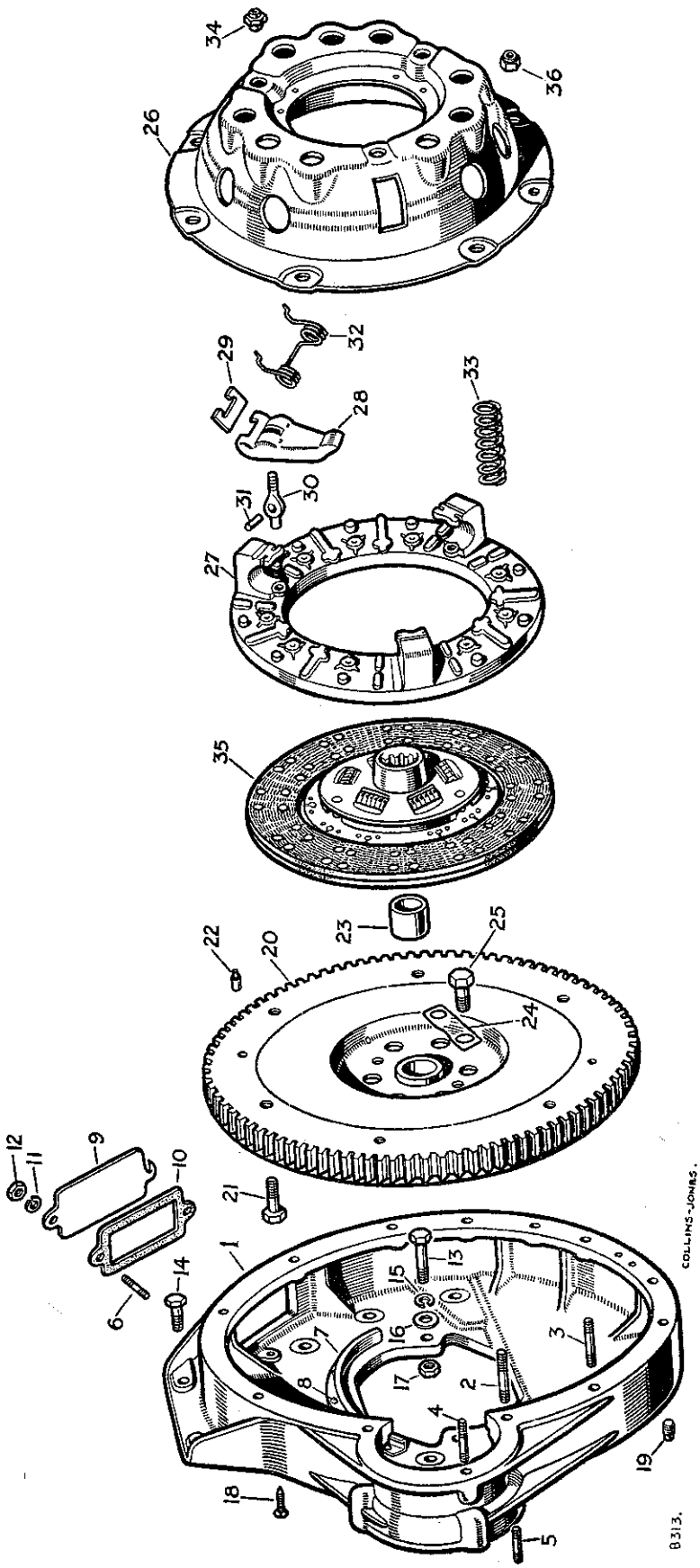

cardiagn.com

FLYWHEEL AND CLUTCH, BORG AND BECK TYPE

PLATE REF.	1 2 3 4 DESCRIPTION	Qty.	Part No.	REMARKS
1	FLYWHEEL HOUSING ASSEMBLY	1	212369	
2	Stud, long ($\frac{3}{8}$") } Fixing	2	55778	
3	Stud, short ($\frac{3}{8}$") } flywheel housing	10	3650	
4	Stud ($\frac{5}{16}$") } to bell housing	1	3200	
5	Stud ($\frac{3}{8}$") fixing starter housing	3	52171	
6	Stud ($\frac{1}{4}$") fixing inspection cover	2	3651	
9	Inspection cover plate	1	56140	
10	Joint washer for cover plate	1	50216	
11	Spring washer } Fixing	2	3074	
12	Nut ($\frac{1}{4}$") } cover plate	2	2823	
13	Special bolt	6	250542	
14	Special set bolt	2	215272	
15	Spring washer } Fixing flywheel housing	8	3076	
16	Plain washer to cylinder block	6	2219	
17	Nut ($\frac{3}{8}$")	6	2827	
18	Indicator pin for engine timing	1	09085	
20	FLYWHEEL ASSEMBLY	1	230304	
	Ring gear for flywheel	1	232404	
21	Special fitting bolt, fixing clutch cover plate	6	214840	
22	Dowel, locating clutch cover plate	2	231759	
23	Bush for primary pinion	1	08566	
24	Locker } Fixing flywheel	3	3674	
25	Special set bolt } to crankshaft	6	210211	
	CLUTCH ASSEMBLY	1	231879	
26	Cover plate for clutch	1	231888	
27	Pressure plate for clutch	1	231880	} Engines numbered 06100201 onwards
28	Release lever for clutch	3	242993 Must be supplied in sets of three	
29	Strut for release lever	3	231884	
30	Eyebolt for release lever	3	231886	
31	Pin for release lever	3	231885	
32	Anti-rattle spring for release lever	3	231883	
33	Clutch spring (cream)	9	231881	
34	Special eyebolt and nut for release lever adjustment	3	242996	
35	Clutch plate complete	1	240404	
	Lining package for clutch plate	1	261921	
36	Self-locking nut ($\frac{5}{16}$") fixing cover plate	6	251321	

cardiagn.com

GEARBOX, MAIN CASING

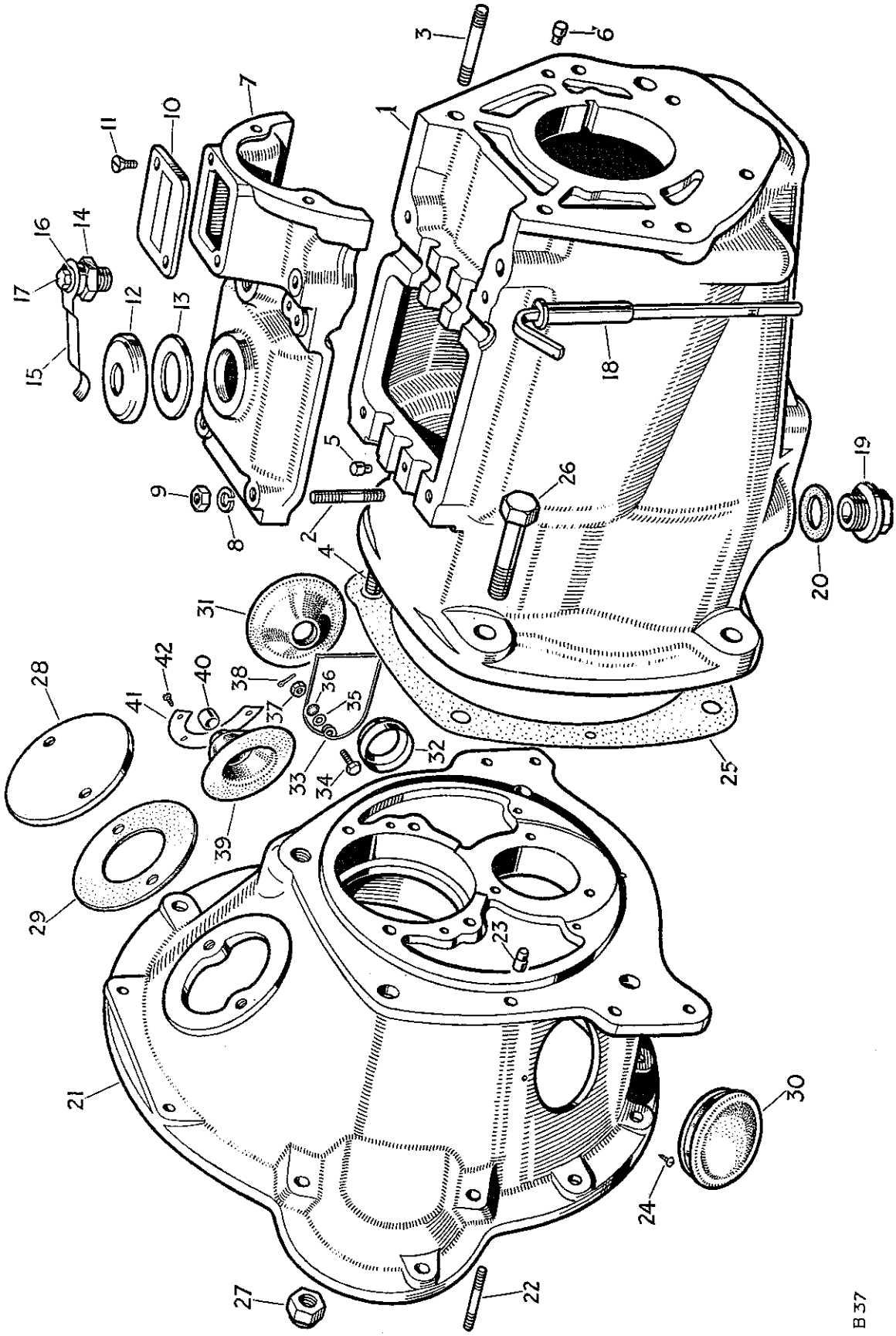

cardiagn.com

GEARBOX, MAIN CASING

PLATE REF.	1 2 3 4 DESCRIPTION	Qty.	Part No.	REMARKS
	GEARBOX COMPLETE ASSEMBLY	1	230353	*Gearboxes numbered 860001 to 06106000
	GEARBOX COMPLETE ASSEMBLY	1	234718	*Gearboxes numbered 06106001 to 06106828 R.H.D. and 06106001 to 06112986 L.H.D.
	GEARBOX COMPLETE ASSEMBLY	1	233555	*Gearboxes numbered 06106829 to 16102313 R.H.D. and 06112987 to 16131687 L.H.D.
	GEARBOX COMPLETE ASSEMBLY	1	234749	*Gearboxes numbered 16102314 and 16131688 onwards
1	GEARBOX CASING ASSEMBLY	1	219894	
	Stud for top cover	2	3319	
2	Stud for top cover and gear change plate	2	3236	
	Stud, long } For transfer	2	55778	
3	Stud, short } casing	3	3238	
4	Stud for bell housing	1	264639	
5	Dowel locating top cover	2	07289	
6	Dowel locating transfer casing	2	55636	
7	Top cover for gearbox	1	06417	Not supplied separately
8	Spring washer } Fixing	4	3076	
9	Nut (3/8") } top cover	4	2827	
10	Inspection cover plate for selectors	1	42590	
11	Set screw (1/4" Whit x 7/16" long) fixing cover plate	2	52246	
12	Oil filler cap	1	11931	
13	Joint washer for cap	1	11932	
14	Plug for retaining spring	1	59720	
15	Retaining spring for cap	1	06419	
16	Plain washer } Fixing spring	1	2213	
17	Set bolt (1/4" Whit. x 7/16" long) } to plug	1	215769	
18	Oil level dipstick	1	239192	
19	Drain plug for gearbox	1	241110	
20	Washer for plug	1	230509	
21	BELL HOUSING ASSEMBLY	1	219895	
22	Stud for withdrawal race housing	3	269413	
23	Dowel locating gearbox	1	55636	
24	Drive screw for bell housing hole	1	72628	
25	Joint washer, bell housing to gearbox	1	07118	
26	Bolt (1/2" x 1 13/16" long) } Fixing	1	215494	
	Bolt (1/2" x 2" long) } gearbox casing	2	250573	
27	Self-locking nut (1/2") } to bell housing	4	50528	
28	Top cover for bell housing	1	06846	
29	Rubber seal for top cover	1	232606	
30	Grommet for bell housing hole	1	232604	R.H.D.
31	Grommet for bell housing shaft	1	233380	R.H.D. Internal seal, alternative to 4 lines below
32	Centre for dust cover	1	232647	R.H.D. Internal seal, alternative to 4 lines below
33	Spring for shaft grommet	1	232898	R.H.D. Internal seal, alternative to 4 lines below
34	Special bolt	1	232930	R.H.D. Internal seal, alternative to 4 lines below
35	Plain washer	1	2226	R.H.D. Internal seal, alternative to 4 lines below
36	Shakeproof washer } Fixing spring to	1	71082	R.H.D. Internal seal, alternative to 4 lines below
37	Nut (2 B.A.) } bell housing	1	2247	R.H.D. Internal seal, alternative to 4 lines below
38	Split pin	1	3359	R.H.D. Internal seal, alternative to 4 lines below
39	Grommet complete for bell housing shaft	1	234538	R.H.D. External seal, alternative to 8 lines above. For Service use
40	Bush for grommet	1	217521	R.H.D. External seal, alternative to 8 lines above. For Service use
41	Retaining plate for grommet	1	233575	R.H.D. External seal, alternative to 8 lines above. For Service use
42	Drive screw fixing plate to bell housing	4	70886	R.H.D. External seal, alternative to 8 lines above. For Service use

* The main gearbox, i.e., 4F and R, without transfer box, can be supplied as a separate assembly under Part No. 230354 for gearboxes numbered 860001 to 06106000 and Part No. 233556 for gearboxes numbered 06106001 onwards.

cardiagn.com

GEARBOX, MAIN CASING

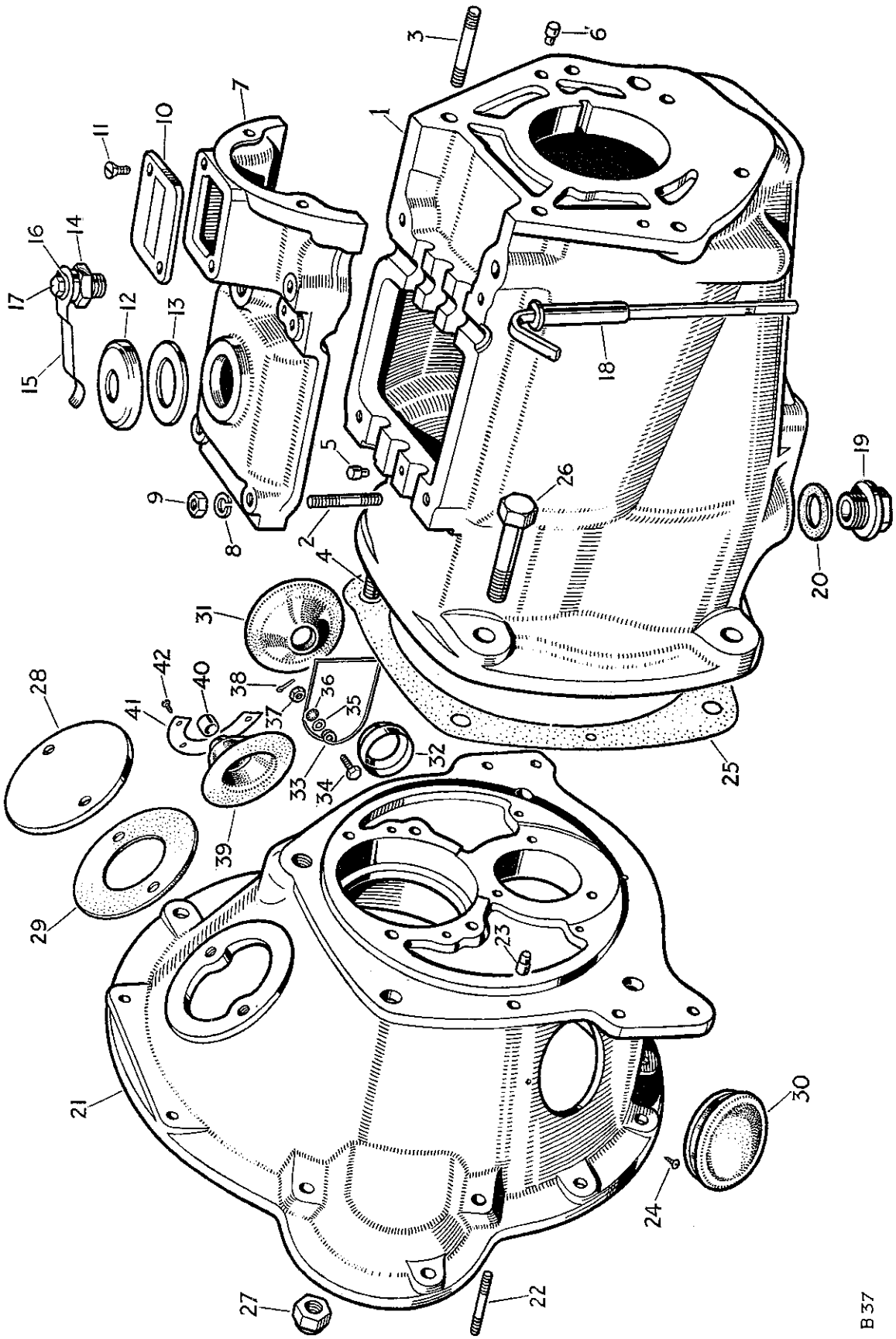

cardiagn.com

GEARBOX, MAIN CASING

PLATE REF. 1 2 3 4	DESCRIPTION	Qty.	Part No.	REMARKS
	Centre for dust cover	1	232627	L.H.D
	Joint washer for centre	1	213662	L.H.D
	Grommet for bell housing hole	1	232604	L.H.D
	Grommet for bell housing shaft	1	233380	L.H.D
	Spring for shaft grommet	1	233379	L.H.D
	Special bolt (Fixing spring to bell housing)	1	232930	L.H.D
	Plain washer (Fixing spring to bell housing)	1	2226	L.H.D
	Shakeproof washer (Fixing spring to bell housing)	1	71082	L.H.D
	Nut (2 B.A.) (Fixing spring to bell housing)	1	2247	L.H.D
	Split pin (Fixing spring to bell housing)	1	3359	L.H.D
	Plain washer (Fixing gearbox to engine)	12	2210	
	Plain washer (Fixing gearbox to engine)	1	2550	
	Nut ($\frac{3}{8}$″) (Fixing gearbox to engine)	12	2827	
	Nut ($\frac{5}{16}$″) (Fixing gearbox to engine)	1	2828	

cardiagn.com

GEARBOX, TRANSFER CASING

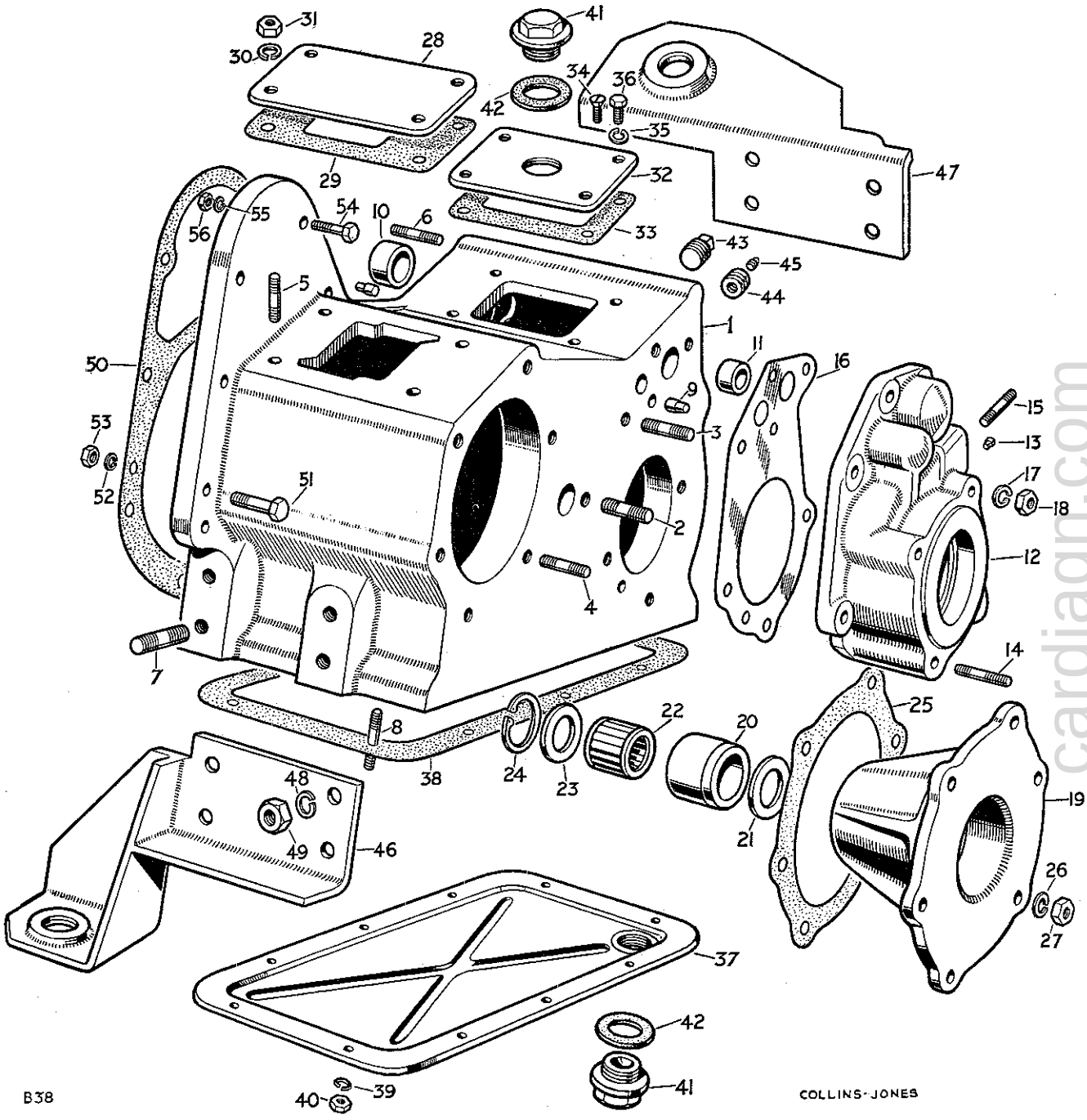

cardiagn.com

GEARBOX, TRANSFER CASING

PLATE REF.	1 2 3 4 DESCRIPTION	Qty.	Part No.	REMARKS
1	TRANSFER BOX CASING ASSEMBLY	1	219479	Gearboxes numbered 860001 to 16102313 and 16131687
	TRANSFER BOX CASING ASSEMBLY	1	233446	Gearboxes numbered 16102314 and 16131688 onwards
2	Stud for intermediate shaft	1	217778	
3	Stud for speedometer housing	6	3650	
4	Stud for mainshaft housing	6	3650	
5	Stud for top cover plate	4	217978	
	Stud, long } For freewheel or	1	232497	
6	Stud, short } transfer shaft housing	6	3200	
7	Stud for engine mounting	8	217976	
8	Stud for bottom cover	10	212104	
9	Dowel locating speedometer and freewheel housings	4	55636	
10	Bush, large } For shaft	1	217448	
11	Bush, small } guide	1	217447	Gearboxes numbered 860001 to 16102313 and 16131687
12	HOUSING ASSEMBLY FOR SPEEDOMETER PINION	1	232866	Gearboxes numbered 860001 to 16102313 and 16131687
	HOUSING ASSEMBLY FOR SPEEDOMETER PINION	1	236628	Gearboxes numbered 16102314 and 16131688 onwards
13	Insert for pinion	1	232846	
14	Stud for transmission brake	4	217973	
15	Stud for speedometer drive sleeve	2	212104	
	Shim .003″ }	As required	235455	
	Shim .005″ } For speedometer	As required	217622	
16	Shim .010″ } pinion housing	As required	217623	
	Shim .015″ }	As required	217620	
17	Spring washer } Fixing housing	6	3076	
18	Nut (3/8″) } to transfer box	6	2827	
	HOUSING COMPLETE ASSEMBLY, REAR MAINSHAFT BEARING	1	230696	
19	HOUSING ASSEMBLY, REAR MAINSHAFT BEARING	1	217844	
20	Bush for housing	1	217843	Not required when rear power take-off or centre power take-off is fitted
21	Retaining plate, inner	1	217523	
22	Bearing for mainshaft	1	217478	
23	Retaining plate, outer	1	217523	
24	Circlip fixing bearing	1	217525	
25	Joint washer for bearing housing	1	217680	
26	Spring washer } Fixing housing	6	3076	
27	Nut (3/8″) } to transfer box	6	2827	
28	Cover plate for P.T.O. selector	1	217970	Not required when rear power take-off or centre power take-off is fitted
29	Joint washer for cover plate	1	230140	
30	Spring washer } Fixing cover plate	4	3075	
31	Nut (5/16″) } to transfer box	4	2828	
32	Cover plate for transfer gear change	1	230021	
33	Joint washer for cover plate	1	219995	
34	Set screw fixing plate	4	55779	Gearboxes numbered 860001 to 862380
35	Spring washer } Fixing	4	3074	Gearboxes numbered 862381 onwards
36	Set bolt (1/4″ Whit x 3/4″ long) } plate	4	215594	

cardiagn.com

GEARBOX, TRANSFER CASING

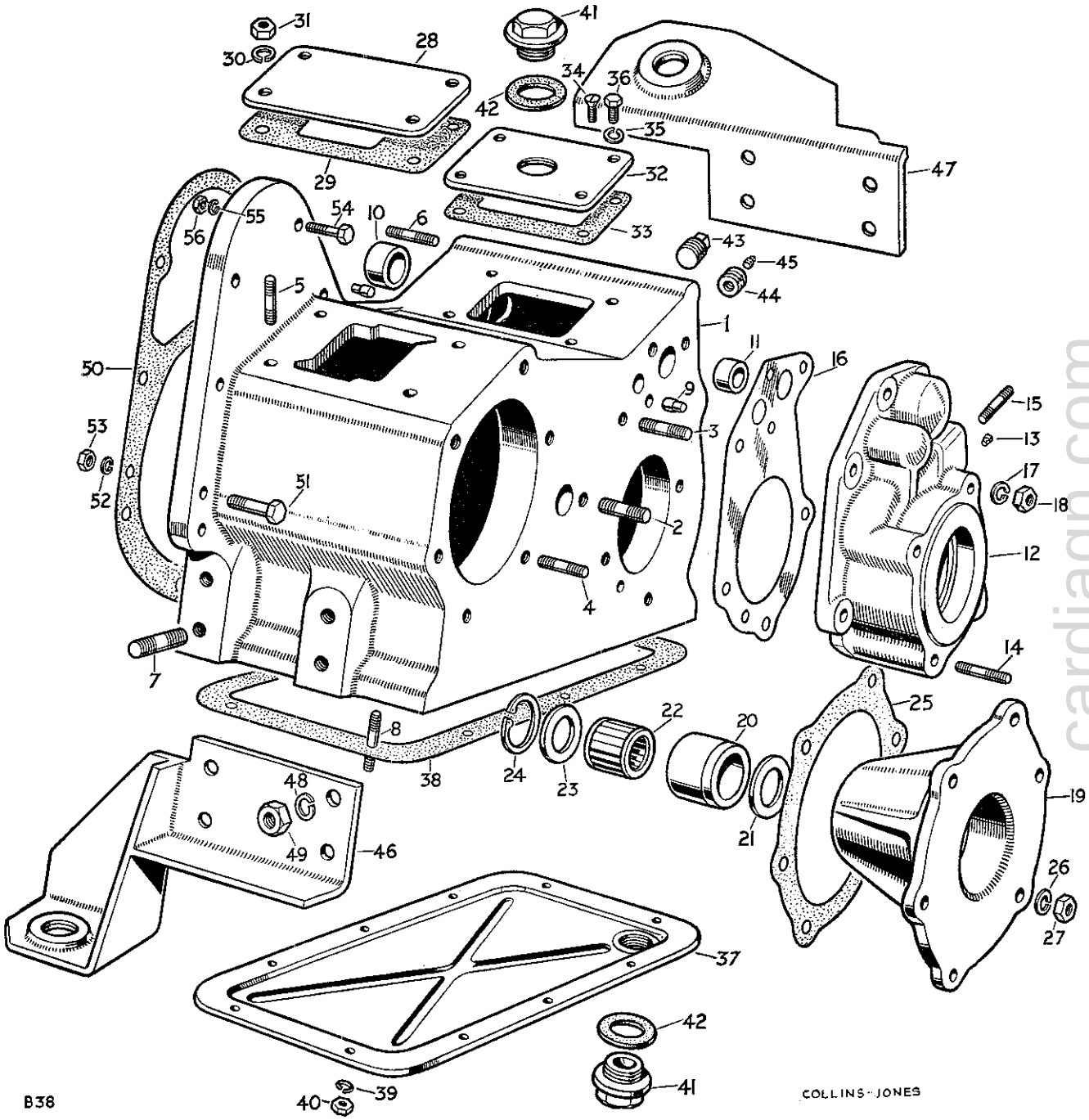

cardiagn.com

GEARBOX, TRANSFER CASING

PLATE REF.	1 2 3 4 DESCRIPTION	Qty.	Part No.	REMARKS
37	Cover plate, bottom, for transfer box	1	218259	
38	Joint washer for bottom cover	1	218270	
39	Spring washer } Fixing	10	3074	
40	Nut ($\frac{1}{4}$") } cover	10	2823	
41	Plug, top and bottom	2	241110	
42	Joint washer for plug	2	230509	
43	Oil level plug, large, $\frac{1}{2}$" gas	1	3292	
44	Adaptor plug for oil level	1	234814	Alternative pattern — Check before ordering
45	Oil level plug, small, $\frac{1}{8}$" gas	1	3289	
46	Rear mounting foot L.H.	1	234643	
47	Rear mounting foot R.H.	1	217968	
48	Spring washer } Fixing feet to	8	3077	
49	Nut ($\frac{7}{16}$") } transfer box	8	2836	
50	Joint washer, transfer box to gearbox	1	267795	
51	Bolt ($\frac{3}{8}$" x $1\frac{11}{16}$" long) }	1	215278	
52	Spring washer } Fixing transfer box to	3	3076	
53	Nut ($\frac{3}{8}$") } gearbox	3	2827	
	Self-locking nut ($\frac{3}{8}$") }	3	50526	
54	Bolt ($\frac{5}{16}$" x $1\frac{29}{32}$" long) } Fixing	2	215170	
55	Spring washer } transfer box to	2	3075	
56	Nut ($\frac{5}{16}$") } gearbox top cover	2	2828	

cardiagn.com

GEARBOX, SHAFTS AND GEARS

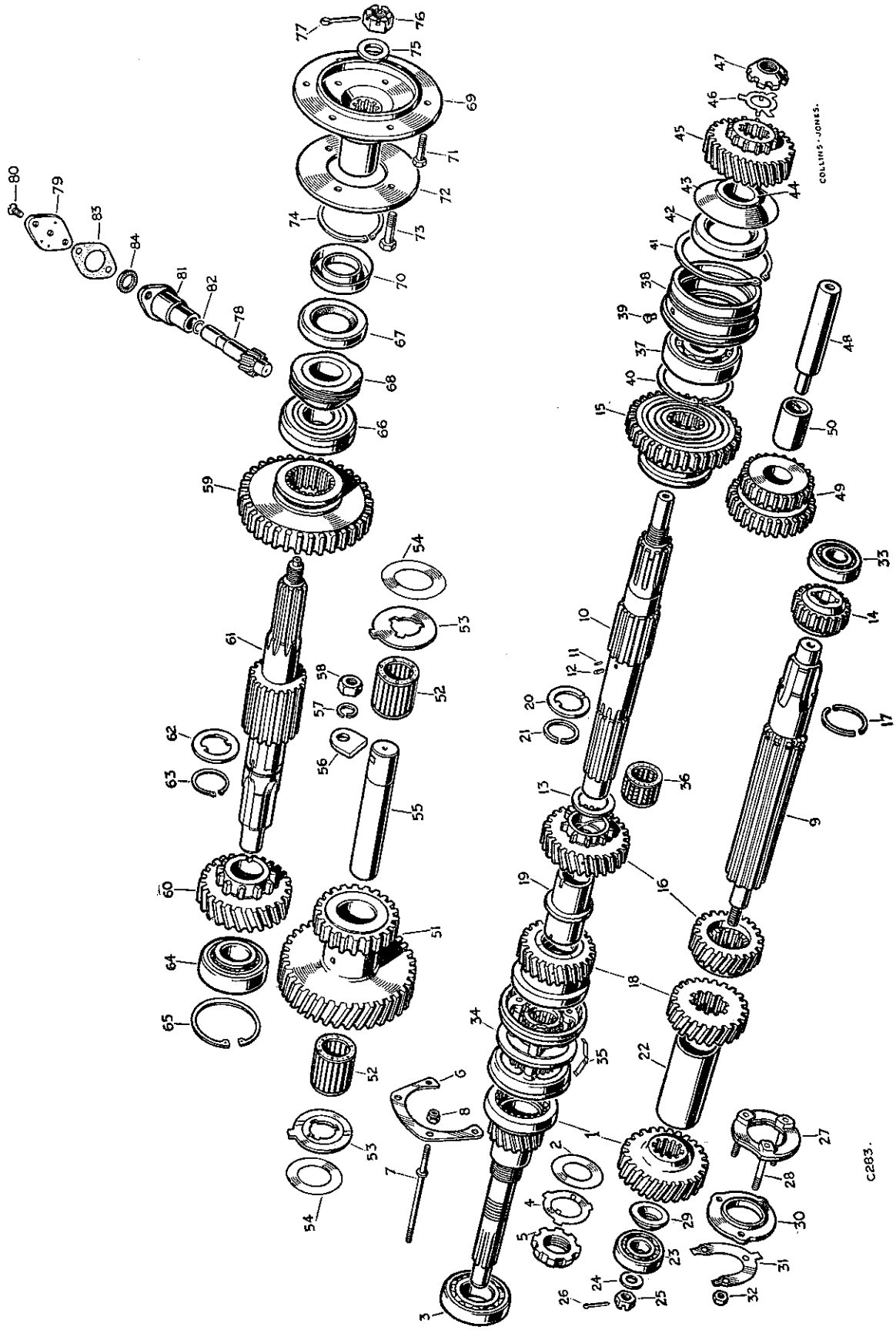

cardiagn.com

GEARBOX, SHAFTS AND GEARS

PLATE REF.	1 2 3 4 DESCRIPTION	Qty.	Part No.	REMARKS
1	Primary pinion and constant gear	1	217874	Gearboxes numbered 860001 to 06106828 R.H.D., and 06112986 L.H.D.
1	Primary pinion and constant gear	1	240485	Gearboxes numbered 06106829 onwards R.H.D., and 06112987 onwards L.H.D.
2	Shield for primary pinion	1	01017	Gearboxes numbered 16102393 and 16131730 onwards
3	Ball bearing for primary pinion	1	55714	
4	Lockwasher } Fixing bearing	1	08250	
5	Locknut } to pinion	1	213416	
6	Retaining plate } Fixing	1	213666	
7	Extension stud } bearing to	4	214090	
8	Self-locking nut ($\frac{5}{16}$") } bell housing	4	50525	
9	Layshaft	1	09917	
10	Mainshaft	1	265258	
11	Peg for 2nd gear thrust washer	1	06405	
12	Peg for mainshaft distance sleeve	1	09561	
	Thrust washer .125" }	1	267572 }	
13	Thrust washer .128" } For 2nd speed gear	1	267573 }	As required
	Thrust washer .130" }	1	267574 }	
	Thrust washer .135" }	1	267575 }	
14	1st speed layshaft gear	1	217388	
15	1st speed mainshaft gear	1	217387	
16	2nd speed layshaft and mainshaft gear	1	260133	
17	Split ring for 2nd speed layshaft gear	1	08153	
	3rd speed layshaft and mainshaft gear	1	260325	Gearboxes numbered 860001 to 06106000
18	3rd speed layshaft and mainshaft gear	1	238339	Gearboxes numbered 06106001 onwards
19	Distance sleeve for mainshaft	1	239705	
20	Thrust washer .125" }	1	08188 }	
	Thrust washer .128" } For 3rd speed	1	50702 }	As required
	Thrust washer .130" } mainshaft gear	1	50703 }	
	Thrust washer .135" }	1	231737 }	
21	Spring ring fixing 2nd and 3rd mainshaft gears	1	06402	
22	Sleeve for layshaft	1	09920	
23	Bearing for layshaft, front	1	09962	
24	Plain washer }	1	08185	
25	Slotted nut } Fixing bearing to layshaft	1	09932	
26	Split pin }	1	2980	
27	BEARING PLATE ASSEMBLY FOR LAYSHAFT	1	214792	
28	Stud for bearing cap	3	213417	
	Distance piece .312" }	1	241649 }	
29	Distance piece .332" } For layshaft	1	241650 }	As required
	Distance piece .352" }	1	241651 }	
30	Retaining plate for layshaft front bearing	1	213419	
31	Lock washer } Fixing cap and bearing	1	09931	
32	Nut ($\frac{5}{16}$") } to bell housing	3	2828	
33	Bearing for layshaft, rear	1	55715	
34	Synchronising clutch	1	239160	
35	Detent spring for clutch	3	06395	
36	Roller bearing for mainshaft	1	06397	
37	Ball bearing for mainshaft	1	1645	
38	Housing for mainshaft bearing, rear	1	217811	
39	Peg, housing to casing	1	09927	
40	Circlip, bearing to housing	1	09960	
41	Circlip, housing to casing	1	09961	

cardiagn.com

GEARBOX, SHAFTS AND GEARS

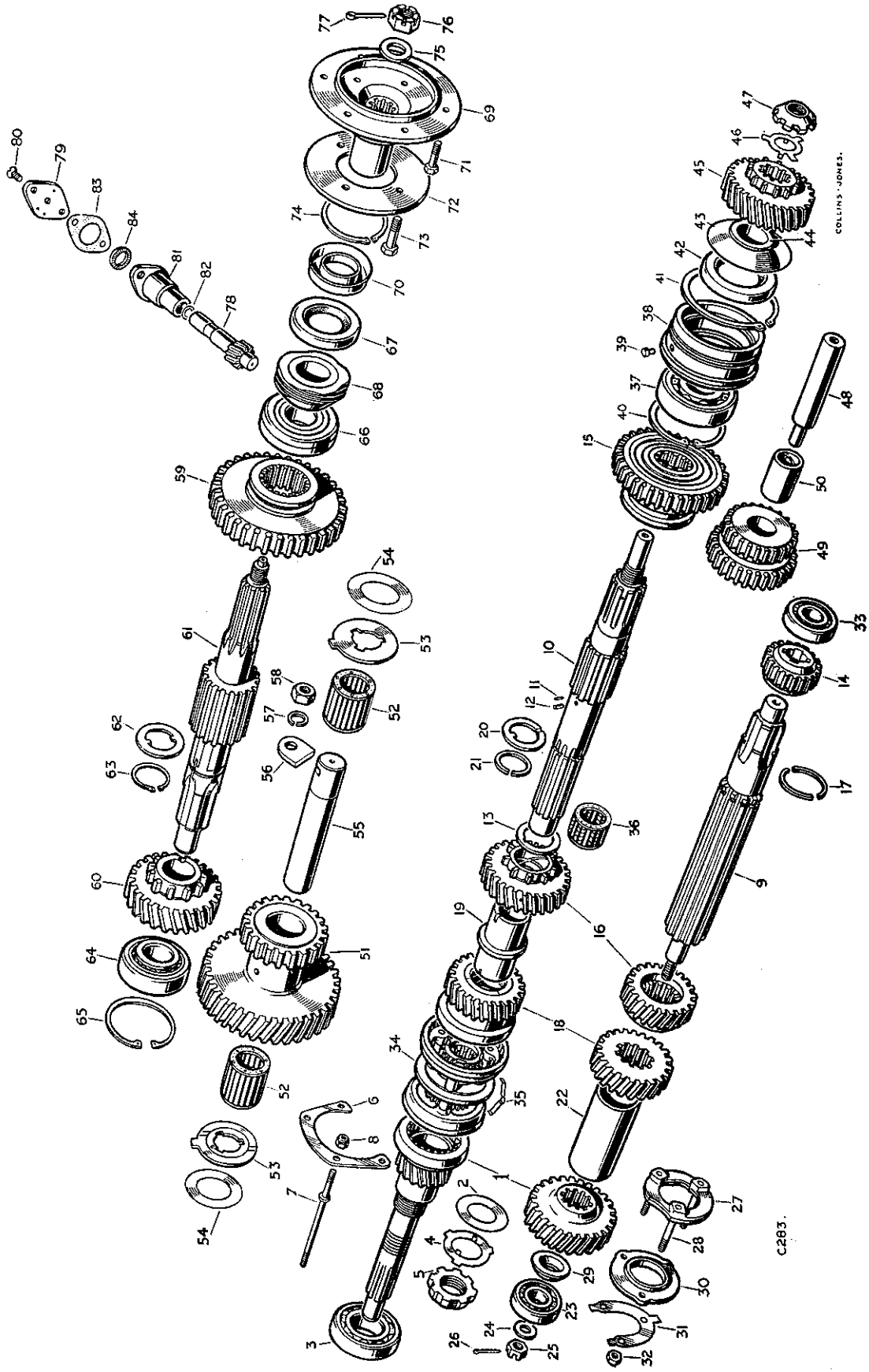

PLAT. REF.
42
43
44
45
46
47
48
49
50
51
52
53
54
55
56
57
58
59
60
61
62
63
64
65
66
67
68
69
71
72
73
74
75
76
77
78
79
80
81
84

carpages.co.uk

GEARBOX, SHAFTS AND GEARS

PLATE REF.	1 2 3 4 DESCRIPTION	Qty.	Part No.	REMARKS
42	Oil seal for rear of mainshaft	1	236305	
43	Oil thrower for mainshaft	1	232415	
44	Distance piece, rear of mainshaft	1	217474	
45	Mainshaft gear for transfer box	1	218244	
46	Lock washer } Fixing gear	1	217476	
47	Special nut } to mainshaft	1	217477	
48	Shaft for reverse gear	1	06424	
49	REVERSE WHEEL ASSEMBLY	1	217389	
50	Bush for reverse wheel	1	56854	
51	Gear, intermediate	1	219468	
52	Roller bearing for intermediate gear	2	219466	
53	Thrust washer for intermediate gear	2	219469	
54	Shim for intermediate gear	As required	234835	
55	Shaft for intermediate gear	1	267794	
56	Retaining plate for shaft	1	217484	
57	Spring washer } Fixing plate	1	3076	
58	Nut (3/8") } to casing	1	2827	
59	Low gear wheel	1	235438	
60	High gear wheel	1	218243	
61	Output shaft, rear drive	1	217487	Gearboxes numbered 860001 to 16102313 and 16131687
	Output shaft, rear drive	1	235985	Gearboxes numbered 16102314 and 16131688 onwards
62	Thrust washer for high gear wheel	1	217488	
63	Circlip fixing washer to shaft	1	217489	
64	Bearing for output shaft, front	1	217490	
65	Circlip fixing bearing to case	1	217526	
66	Bearing for output shaft, rear	1	217512	
67	Oil seal for output shaft	1	236417	
68	Speedometer worm complete	1	217491	
69	Flange for output shaft, rear drive	1	236630	
71	Fitting bolt for brake drum	6	217564	
72	Retaining flange for brake drum bolts	1	217568	
73	Fitting bolt for propeller shaft	4	217565	
74	Circlip retaining bolts and flange	1	217546	
75	Plain washer }	1	3300	
76	Slotted nut } Fixing flange to output shaft	1	3259	
77	Split pin }	1	2428	
	Speedometer pinion	1	05847	Gearboxes numbered 860001 to 06106000
78	Speedometer pinion	1	232867	Gearboxes numbered 06106001 onwards
79	Retaining plate for pinion	1	232565	Gearboxes numbered 06106001 onwards
80	Screw fixing plate to housing	2	2529	Gearboxes numbered 06106001 onwards
81	Sleeve for pinion	1	268791	
84	Oil seal for pinion	1	211502	
	Bush for pinion	1	214173	Gearboxes numbered 860001 to 06106000
	Spring washer } Fixing sleeve and	2	3074	Gearboxes numbered 860001 to 06106000
	Nut (1/4") } bush to housing	2	2823	Gearboxes numbered 860001 to 06106000
	Bolt (1/4" x 1 1/4" long) } Fixing	1	235569	Gearboxes numbered 860001 to 06106000
	Spring washer } speedometer	1	3074	Gearboxes numbered 860001 to 06106000
	Nut (1/4") } cable	1	2823	Gearboxes numbered 860001 to 06106000

cardiagn.com

GEARBOX, SELECTORS AND LEVERS

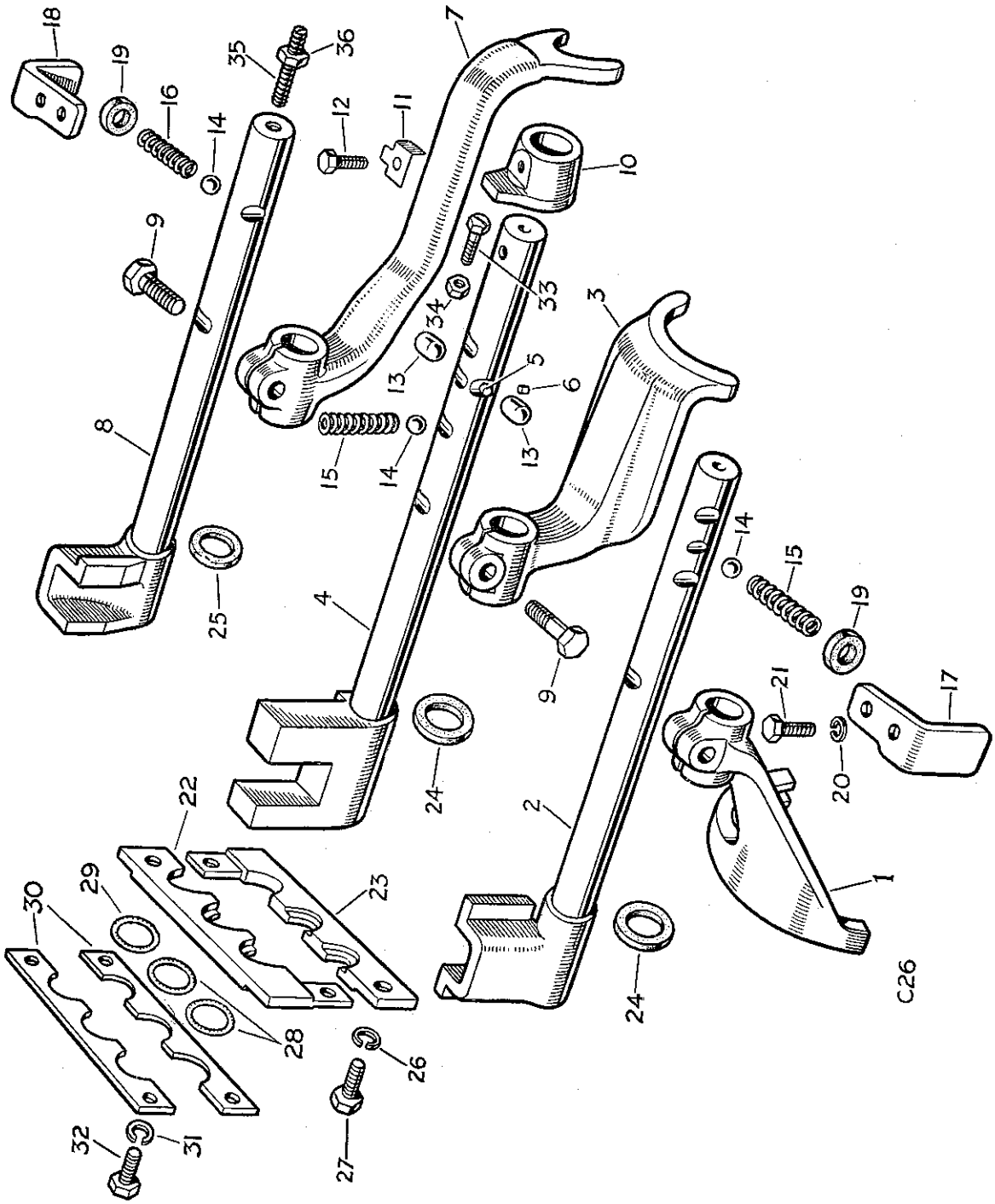

GEARBOX, SELECTORS AND LEVERS

PLATE REF.	1 2 3 4 DESCRIPTION	Qty.	Part No.	REMARKS
1	Selector fork, 3rd and 4th speed	1	06422	
2	Shaft for fork, 3rd and 4th speed	1	213636	
3	Selector fork, 1st and 2nd speed	1	06421	
4	SHAFT ASSEMBLY FOR FORK, 1st and 2nd SPEED	1	213637	
5	Interlocking pin	1	55697	
6	Peg fixing interlocking pin	1	55775	
7	Selector fork, reverse	1	217391	
8	Shaft for fork, reverse	1	219725	
9	Set bolt ($\frac{5}{16}$" x 1" long) fixing forks to shafts	3	237160	
10	Stop for 2nd speed	1	210203	
11	Locker } Fixing stop to	1	210204	
12	Set bolt ($\frac{1}{4}$" x $\frac{5}{8}$" long) } selector shaft	1	215053	
13	Interlocking plunger	2	55638	
14	Steel ball for selectors	3	1643	
15	Selector spring, forward	2	03649	
16	Selector spring, reverse	1	56102	
17	Retaining plate L.H. } For	1	05853	
18	Retaining plate R.H. } selector springs,	1	05854	
19	Rubber grommet } side	2	05852	
20	Spring washer } Fixing retaining	4	3074	
21	Set bolt ($\frac{1}{4}$" Whit. x $\frac{1}{2}$" long) } plates	4	215758	
22	End cover, top half, for selector shafts	1	210205	
23	End cover, bottom half, for selector shafts	1	210206	
24	Felt seal for selector shafts	2	237637	
25	Cork seal for reverse shaft	1	05857	
26	Spring washer } Fixing covers	2	3074	
27	Set bolt ($\frac{1}{4}$" Whit. x $\frac{7}{16}$" long) } to gearbox	2	215769	
33	Set bolt (2 B.A. x $\frac{9}{16}$" long) } In cover for	1	3697	
34	Locknut (2 B.A.) } 2nd gear stop	1	2247	
35	Adjustable stop for reverse selector shaft	1	231033	
36	Locknut ($\frac{1}{4}$") for stop	1	2823	

cardiagn.com

FREEWHEEL

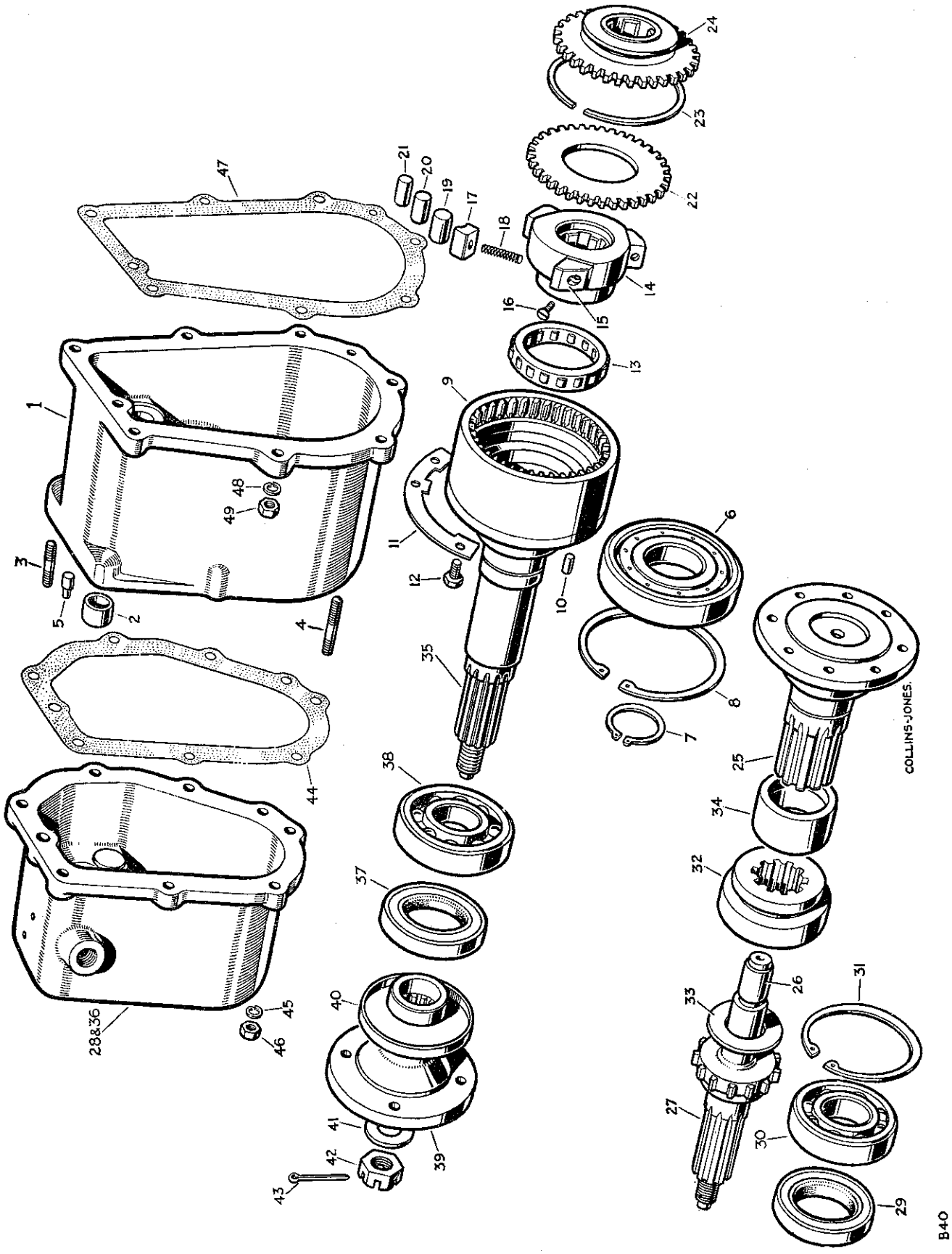

cardiagn.com

FREEWHEEL

PLATE REF.	1 2 3 4 DESCRIPTION	Qty.	Part No.	REMARKS
1	FREEWHEEL HOUSING ASSEMBLY	1	217493	
2	Bush for operating shaft	1	217521	
3	Stud, short, for transfer shaft housing	6	3200	
4	Stud, long, for transfer shaft housing	1	232497	
5	Dowel locating housing	2	55636	
6	Bearing for output shaft	1	217328	
7	Circlip, bearing to shaft	1	217329	
8	Circlip, bearing to housing	1	217766	
9	Freewheel outer member	1	231388	
10	Dowel } Fixing	1	05849	
11	Locker } outer member to	2	07675	
12	Set bolt ($\frac{5}{16}$" x $\frac{13}{16}$" long) } output shaft	6	215216	Gearboxes numbered 860001 to 16102313 and 16131687
13	Pilot bearing for inner member	1	55642	
14	Freewheel inner member	1	217322	
15	Cam roller shoe, fixed	3	55706	
16	Special set screw fixing shoe	3	3108	
17	Cam roller shoe, free	3	55738	
18	Spring for free shoe	3	55742	
19	Roller, large }	3	58397	
20	Roller, medium } For freewheel	3	58396	
21	Roller, small }	3	58395	
22	Retaining plate } Fixing inner member	1	55729	
23	Spring ring } to outer member	1	55726	
24	Locking dog for freewheel ...	1	231387	
25	OUTPUT SHAFT ASSEMBLY	1	217494	
26	Bush for shaft	1	217327	
27	Transfer shaft	1	217324	
28	Housing for transfer shaft	1	217639	
29	Oil seal for housing	1	236417	Gearboxes numbered 860001 to 861988
30	Bearing for shaft	1	217325	
31	Circlip fixing bearing to housing	1	217330	
32	Transfer locking dog	1	217326	
33	Distance washer } Locking	1	219881	
34	Distance piece } transfer dog	1	219882	
35	Output shaft	1	219928	
36	Housing for putput shaft	1	230001	Gearboxes numbered 861989 to 16102313 and 16131687
37	Oil seal for housing	1	236417	
38	Bearing for shaft	1	217325	
39	Flange for transfer shaft, front drive	1	06718	
40	Dust shield for flange	1	232669	
41	Plain washer }	1	3300	
42	Slotted nut } Fixing flange to transfer shaft	1	3259	
43	Split pin }	1	2428	
44	Joint washer for transfer housing	1	217679	Gearboxes numbered 860001 to 16102313 and 16131687
45	Spring washer } Fixing transfer housing to	7	3075	
46	Nut ($\frac{5}{16}$") } freewheel housing	7	2828	
47	Joint washer for freewheel housing	1	217678	
48	Spring washer } Fixing freewheel housing	7	3075	
49	Nut ($\frac{5}{16}$") } to transfer box	7	2828	

cardiagn.com

TRANSFER SHAFT HOUSING, FOUR WHEEL DRIVE

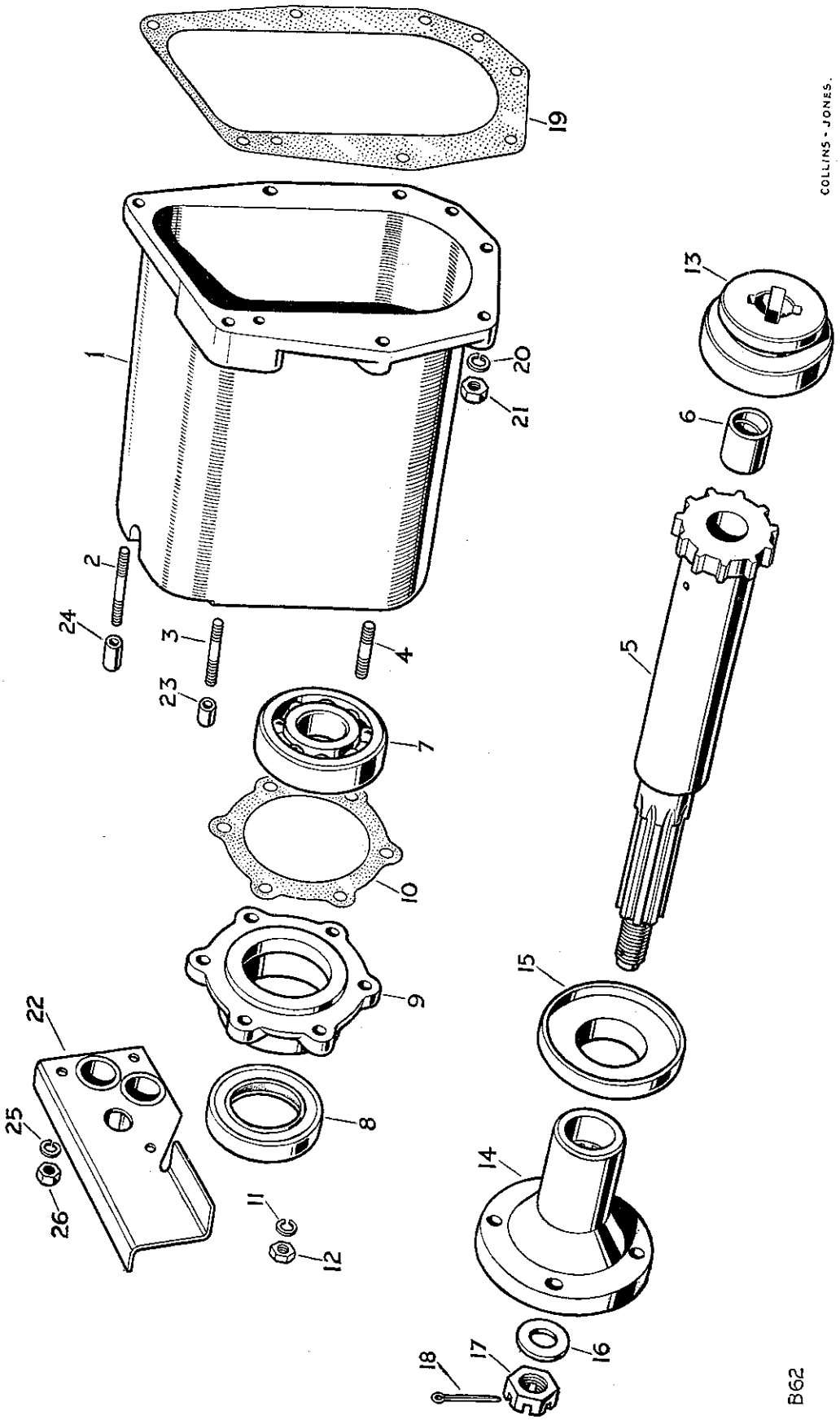

cardiagn.com

TRANSFER SHAFT HOUSING, FOUR WHEEL DRIVE

PLATE REF.	1 2 3 4	DESCRIPTION	Qty.	Part No.	REMARKS
1		TRANSFER SHAFT HOUSING ASSEMBLY	1	242686	
2		Stud, long } For	1	233464	
3		Stud, short } dust cover	2	212103	
4		Stud for oil seal retainer	6	217978	
5		FRONT OUTPUT SHAFT ASSEMBLY	1	243611	
6		Bush for shaft	1	234534	
7		Bearing for front output shaft	1	217325	
8		Oil seal for shaft	1	236417	
9		Retainer for oil seal	1	234524	
10		Joint washer for retainer	1	234525	
11		Spring washer } Fixing	6	3075	
12		Nut ($\frac{5}{16}$") } retainer	6	2828	
13		Locking dog, four wheel drive	1	233241	Gearboxes numbered 16102314 and 16131688 onwards
14		Flange for transfer shaft	1	06718	
15		Dust shield for flange	1	232669	
16		Plain washer } Fixing flange	1	3300	
17		Slotted nut } to transfer	1	3259	
18		Split pin } shaft	1	2428	
19		Joint washer for transfer housing	1	233448	
20		Spring washer } Fixing housing	7	3075	
21		Nut ($\frac{5}{16}$") } to transfer box	7	2828	
22		Dust cover plate for selector shafts	1	233468	
23		Distance piece, short }	2	233465	
24		Distance piece, long } Fixing dust cover	1	233466	
25		Spring washer } to housing	3	3074	
26		Nut ($\frac{1}{4}$") }	3	2823	

cardiagn.com

CLUTCH WITHDRAWAL MECHANISM

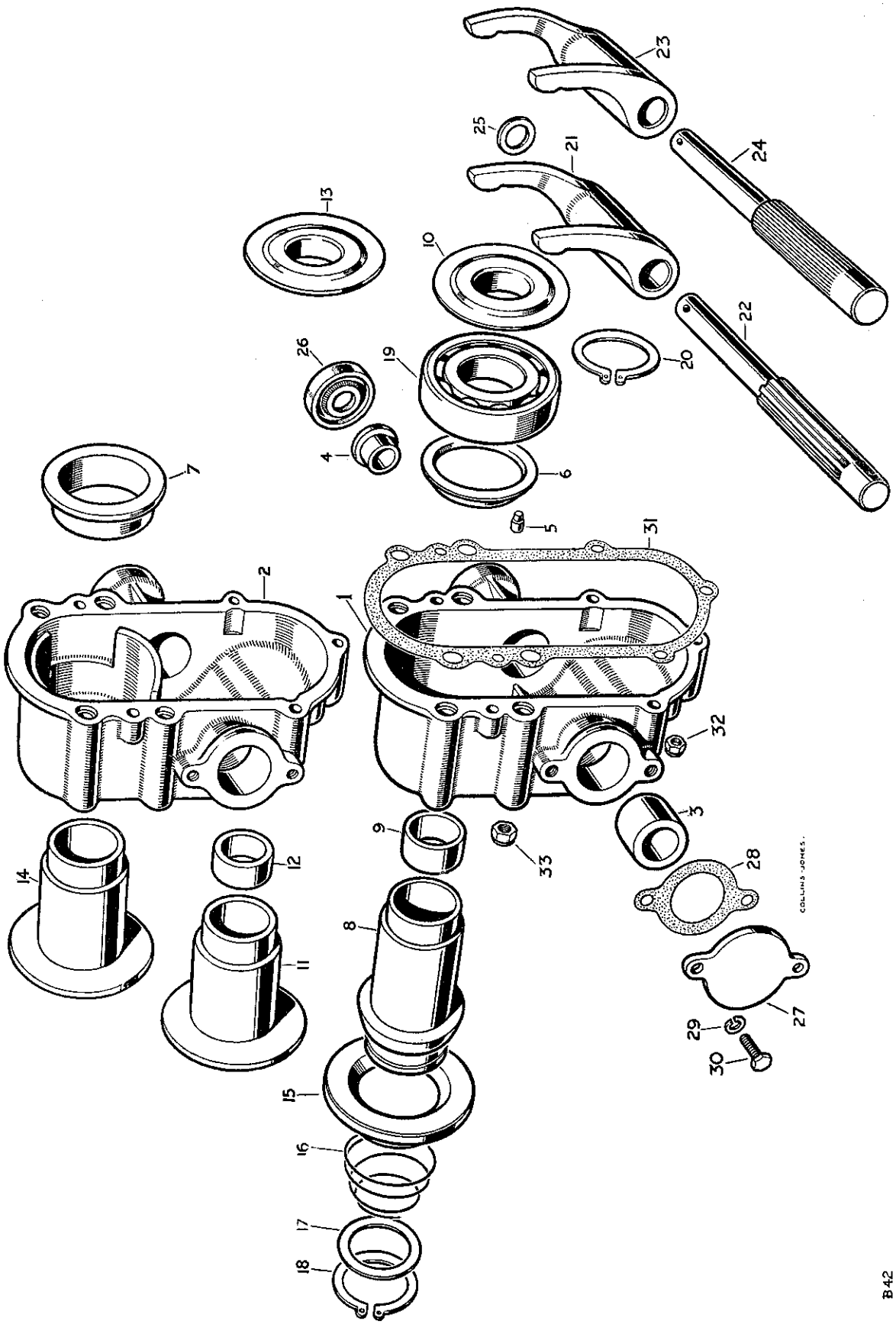

cardiagn.com

CLUTCH WITHDRAWAL MECHANISM

PLATE REF.	1 2 3 4 DESCRIPTION	Qty.	Part No.	REMARKS
1	CLUTCH WITHDRAWAL RACE HOUSING ASSEMBLY	1	213655	R.H.D. Gearboxes numbered 860001 to 06106828 R.H.D and 06112986 L.H.D
	CLUTCH WITHDRAWAL RACE HOUSING ASSEMBLY	1	216195	L.H.D.
2	CLUTCH WITHDRAWAL RACE HOUSING ASSEMBLY	1	231071	R.H.D. Gearboxes numbered 06106829 onwards R.H.D and 06112987 onwards L.H.D
	CLUTCH WITHDRAWAL RACE HOUSING ASSEMBLY	1	232745	L.H.D.
3	Bush for cross shaft, large	1	214793	R.H.D.
	Bush for cross shaft, large	1	217214	L.H.D
4	Bush for cross shaft, small	2	214794	
5	Dowel locating housing	2	213700	
6	Oil drain ring	1	215843	Gearboxes numbered 860001 to 06106828 R.H.D. and 06112986 L.H.D.
	Clutch cross shaft cap	1	216161	L.H.D
7	Bush for withdrawal race sleeve	1	231075	Gearboxes numbered 06106829 onwards R.H.D. and 06112987 onwards L.H.D.
8	CLUTCH WITHDRAWAL SLEEVE ASSEMBLY	1	231298	Gearboxes numbered 860001 to 06100200
9	Bush for sleeve	1	213410	
10	Thrust ring for bearing	1	230077	
11	CLUTCH WITHDRAWAL SLEEVE ASSEMBLY	1	219590	Gearboxes numbered 06100201 to 06106828 R.H.D and 06112986 L.H.D.
12	Bush for sleeve	2	213410	
13	Thrust ring for bearing	1	230077	
14	Clutch withdrawal sleeve	1	231074	Gearboxes numbered 06106829 onwards R.H.D. and 06112987 onwards L.H.D
15	Outer cup for race (For clutch withdrawal sleeve)	1	213413	Gearboxes numbered 860001 to 06100200
16	Spring for cup (For clutch withdrawal sleeve)	1	213418	
17	Retaining washer (For spring) (For clutch withdrawal sleeve)	1	213414	
18	Circlip (For spring) (For clutch withdrawal sleeve)	1	214795	
19	Withdrawal race thrust bearing	1	214797	
20	Circlip fixing bearing to sleeve	1	214796	Gearboxes numbered 860001 to 860913
21	Operating fork for clutch, splined	1	213659	
22	Cross shaft for clutch operation	1	218008	R.H.D. Gearboxes numbered 860001 to 06106828 R.H.D and 06112986 L.H.D
	Cross shaft for clutch operation	1	218028	L.H.D.
23	Operating fork for clutch, serrated	1	264807	
24	Cross shaft for clutch operation	1	231943	R.H.D. Gearboxes numbered 06106329 onwards R.H.D. and 06112987 onwards L.H.D.
	Cross shaft for clutch operation	1	231942	L.H.D
	Woodruff key for cross shaft	1	1664	L.H.D
25	Thrust washer (For cross shaft)	1	213660	
	Thrust washer, outer (For cross shaft)	1	217216	L.H.D
26	Oil seal for cross shaft	1	214787	R.H.D.
	Oil seal for cross shaft	1	219988	L.H.D.
27	Cover plate for cross shaft	1	213661	R.H.D.
	Housing for cross shaft oil seal	1	216160	L.H.D.
28	Joint washer for cover plate or housing	As required	213662	
29	Spring washer (Fixing cover plate or oil seal housing)	2	3074	
30	Set bolt ($\frac{1}{4}$" Whit. x $\frac{21}{32}$" long) (Fixing cover plate or oil seal housing)	2	215593	R.H.D
	Set bolt ($\frac{1}{4}$" Whit x $1\frac{1}{4}$" long) (Fixing cover plate or oil seal housing)	2	215599	L.H.D.
31	Joint washer for clutch withdrawal housing	1	213663	
32	Self-locking nut ($\frac{1}{4}$") (Fixing withdrawal housing to bell housing)	3	50524	
33	Self-locking nut ($\frac{5}{16}$") (Fixing withdrawal housing to bell housing)	4	50525	

cardiagn.com

MAIN GEAR LEVER

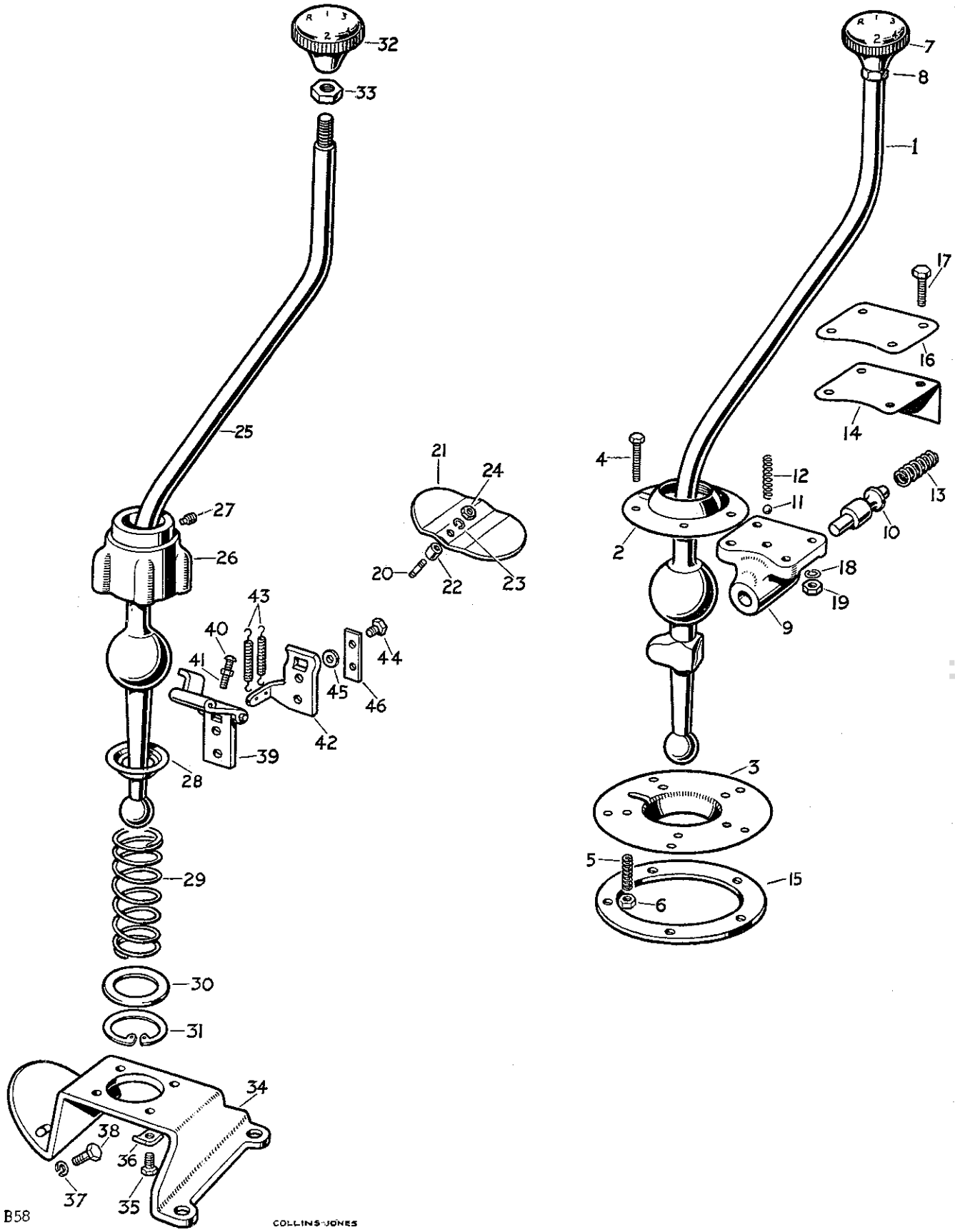

cardiagn.com

MAIN GEAR LEVER

PLATE REF.	1 2 3 4 DESCRIPTION		Qty.	Part No.		REMARKS
	MAIN GEAR CHANGE LEVER ASSEMBLY		1	219656	R.H.D.	
	MAIN GEAR CHANGE LEVER ASSEMBLY		1	219657	L.H.D.	
1	Gear change lever		1	219603	R.H.D.	
	Gear change lever		1	219604	L.H.D.	
2	Ball retainer, upper		1	217732		
3	Ball retainer, lower		1	217736		
4	Special bolt	Fixing retainers together	5	217739		
5	Anti-rattle spring		5	213461		
6	Nut (2 B.A.)		10	2247		
7	Knob for change lever		1	217735		
8	Locknut ($\frac{1}{2}$") for knob		1	3905		
9	Housing for reverse stop		1	219802		
10	Plunger for reverse stop		1	219801		
11	Dedent ball		1	3050		
12	Spring for dedent ball		1	211382		Vehicles numbered 860001 to 861500
13	Spring for plunger		1	213994		
14	Spring retainer		1	219798		
15	Packing plate .036"	Ball retainers	As required	217737		
	Packing plate .128"	to tunnel	As required	217738		
16	Packing plate .036"	Reverse stop	As required	217741		
	Packing plate .128"	housing to tunnel	As required	217742		
17	Special bolt	Fixing ball retainers, reverse	7	217740		
18	Spring washer	stop housing and spring	7	3073		
19	Nut (2 B.A.)	retainer to gearbox cover	7	2247		
20	Stud in bell housing for inspection cover		2	05938		
21	Inspection cover for bell housing		1	212719		
22	Distance piece	Fixing cover to bell housing	2	07635		
23	Spring washer		2	3074		
24	Nut ($\frac{1}{4}$")		2	2823		
	MAIN GEAR CHANGE LEVER ASSEMBLY		1	239927	R.H.D.	
	MAIN GEAR CHANGE LEVER ASSEMBLY		1	239928	L.H.D.	
25	Gear change lever		1	239925	R.H.D.	
	Gear change lever		1	239926	L.H.D.	
26	Housing for lever		1	219714		
27	Locating pin for lever ball		1	237423		
28	Spherical seat for gear lever		1	219721		
29	Retaining spring for lever		1	219723		
30	Retaining plate for spring		1	219722		
31	Circlip fixing retaining plate		1	219797		
32	Knob for lever		1	217735		
33	Locknut ($\frac{1}{2}$") for knob		1	3237		
34	Mounting plate for gear change		1	232608		Vehicles numbered 861501 onwards
35	Set bolt ($\frac{5}{16}$" Whit. x $\frac{13}{16}$" long)	Fixing housing to	4	215648		
36	Locker	mounting plate	4	2499		
37	Spring washer	Fixing mounting	2	3074		
38	Set bolt ($\frac{1}{4}$" Whit x $\frac{21}{32}$" long)	plate to bell housing	2	215593		
39	Reverse stop hinge complete		1	219717		
40	Adjusting screw	For	1	76653		
41	Locknut (2 B.A.)	hinge	1	2247		
42	Bracket for reverse stop spring		1	231115		
43	Spring for reverse stop		1	231116		
44	Set bolt (2 B.A x $\frac{13}{32}$" long)	Fixing hinge and	2	215755		
45	Plain washer	bracket to reverse	2	2260		
46	Locker	selector shaft	1	3421		

cardiagn.com

FREEWHEEL SELECTORS & TRANSFER GEAR LEVER

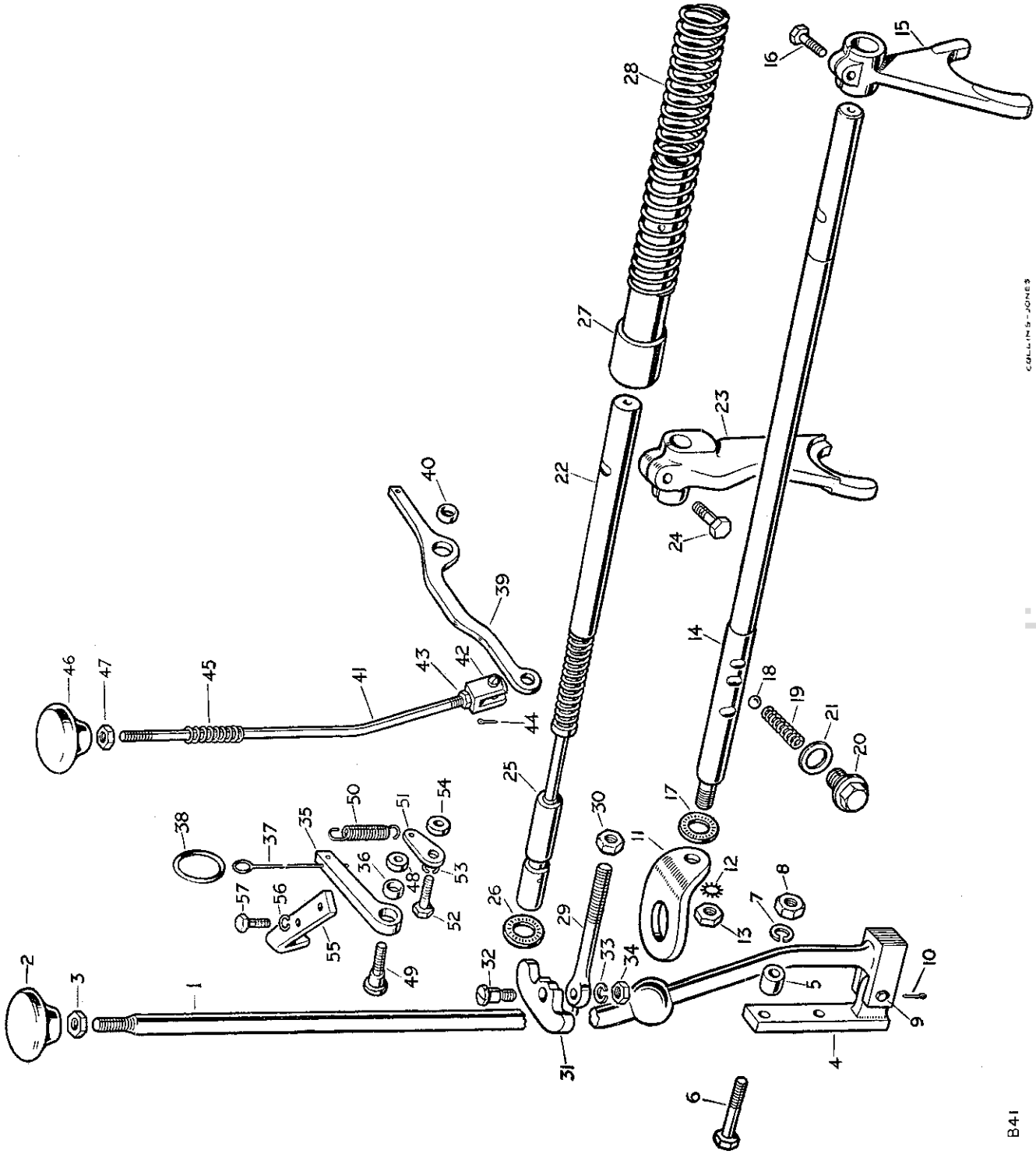

cardiagn.com

FREEWHEEL SELECTORS & TRANSFER GEAR LEVER

PLATE REF. 1 2 3 4	DESCRIPTION	Qty.	Part No.	REMARKS
1	Transfer gear change lever complete	1	219729	Gearboxes numbered 860001 to 16102313 and 16131687
2	Knob for gear change lever	1	219521	
3	Locknut for knob	1	3764	
4	Bracket for gear change lever	1	219709	
5	Distance piece for bracket	2	266955	
6	Bolt ($\frac{5}{16}$" x $1\frac{19}{32}$" long) Fixing bracket to bell housing	2	215170	
7	Spring washer	2	3075	
8	Nut ($\frac{5}{16}$")	2	2828	
9	Clevis pin Fixing gear lever to bracket	1	216421	
10	Split pin	1	2392	
	Link for selector shaft	1	219730	Gearboxes numbered 860001 to 06104000
11	Link for selector shaft	1	232944	Gearboxes numbered 06104001 to 16102313 and 16131687
12	Shakeproof washer Fixing link to selector shaft	1	77626	
13	Special nut	1	3764	
14	Shaft for fork For transfer gear change	1	217587	
15	Selector fork	1	217584	
16	Set bolt ($\frac{5}{16}$" x 1" long) fixing fork to shaft	1	237160	
17	Oil seal for selector shaft	1	211502	
18	Steel ball For selector shaft	1	1643	
19	Selector spring	1	56102	
20	Plug for spring	1	217763	
21	Joint washer for plug	1	213960	
22	Operating shaft complete	1	217682	Gearboxes numbered 860001 to 16102313 and 16131687
23	Fork for operating shaft	1	217429	
24	Set bolt ($\frac{5}{16}$" x 1" long) fixing fork to shaft	1	237160	
25	Operating rod for freewheel	1	219781	
26	Oil seal for operating rod	1	211502	
27	Guide for freewheel engaging spring	1	217446	
28	Spring operating freewheel	1	217445	
29	Eyebolt for freewheel pivot	1	219775	
30	Locknut ($\frac{3}{8}$" Whit.) for eyebolt	1	2464	
31	Pivot complete for freewheel control	1	219857	
32	Special screw Fixing pivot to eyebolt	1	219777	
33	Spring washer	1	3075	
34	Nut ($\frac{5}{16}$")	1	2828	
35	FREEWHEEL LEVER ASSEMBLY	1	230087	Gearboxes numbered 860001 to 06104014
36	Bush for lever	1	230086	
37	Operating wire for lever	1	219878	
38	Ring for operating wire	1	219880	
39	FREEWHEEL LEVER ASSEMBLY	1	232822	Gearboxes numbered 06104015 to 16102313 and 16131687
40	Bush for lever	1	230086	
41	Operating rod for lever	1	232808	
42	Clevis complete fixing rod to lever	1	215808	
43	Locknut ($\frac{1}{4}$") for clevis	1	2823	
44	Split pin for clevis	1	2389	
45	Spring for operating rod	1	232807	
46	Control knob for rod	1	232813	
47	Locknut ($\frac{1}{4}$") for control knob	1	2823	

cardiagn.com

FREEWHEEL SELECTORS & TRANSFER GEAR LEVER

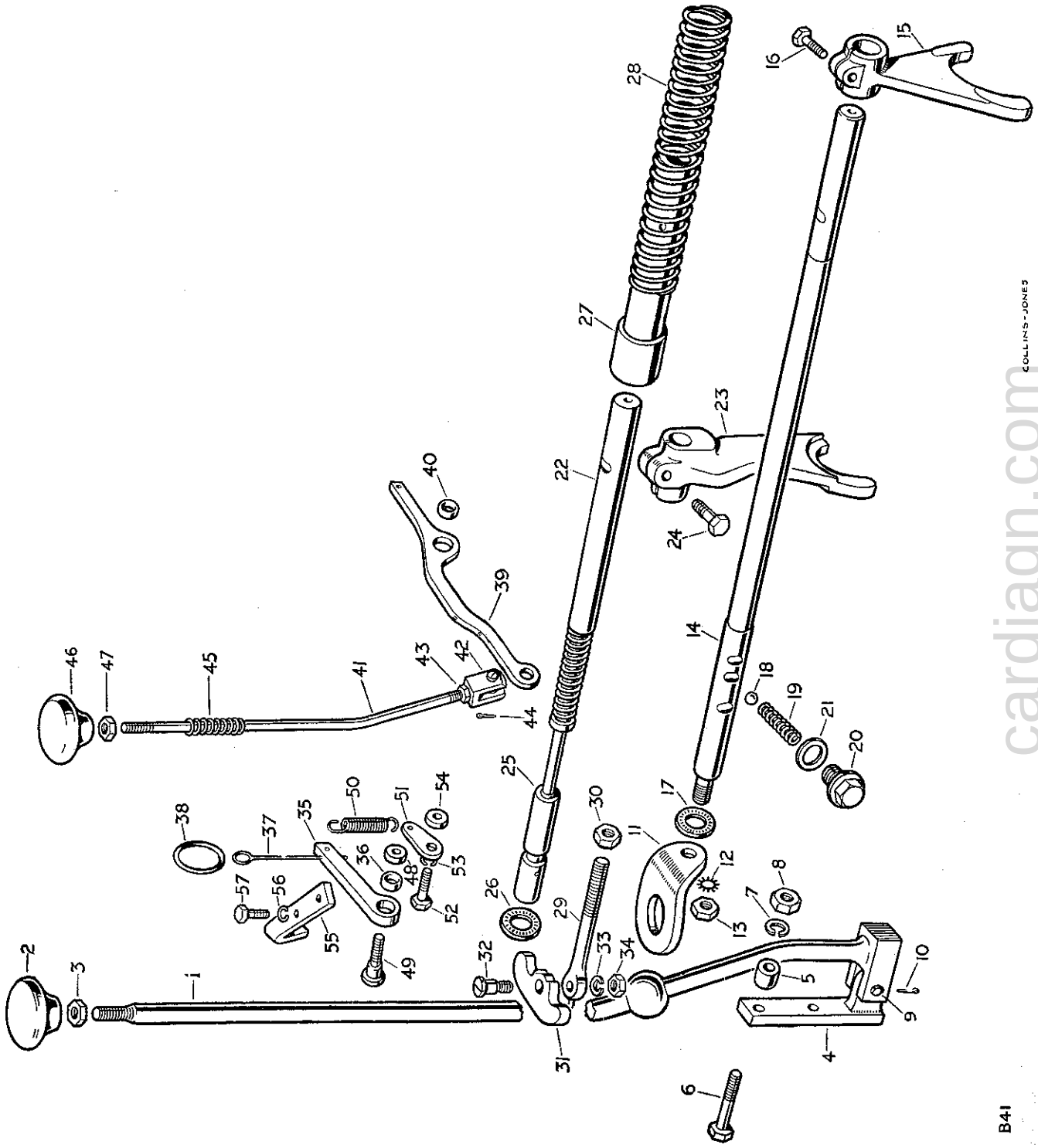

cardiagn.com

FREEWHEEL SELECTORS & TRANSFER GEAR LEVER

PLATE REF.	1 2 3 4 DESCRIPTION		Qty.	Part No.	REMARKS
48	Distance piece	Fixing lever	1	219779	Gearboxes numbered 860001 to 16102313 and 16131687
49	Special screw	to housing	1	219776	
50	Return spring for lever		1	219883	
51	Anchor for spring		1	214301	
52	Bolt (¼″ Whit. x 21/32″ long)	Fixing anchor	1	215593	
53	Spring washer		1	3074	
54	Distance piece		1	219779	
55	Guide for freewheel lever		1	230242	
56	Spring washer	Fixing guide	2	3073	
57	Set bolt (2 B.A. x ½″ long)	to housing	2	234603	

cardiagn.com

FOUR WHEEL DRIVE SELECTORS AND TRANSFER GEAR LEVER

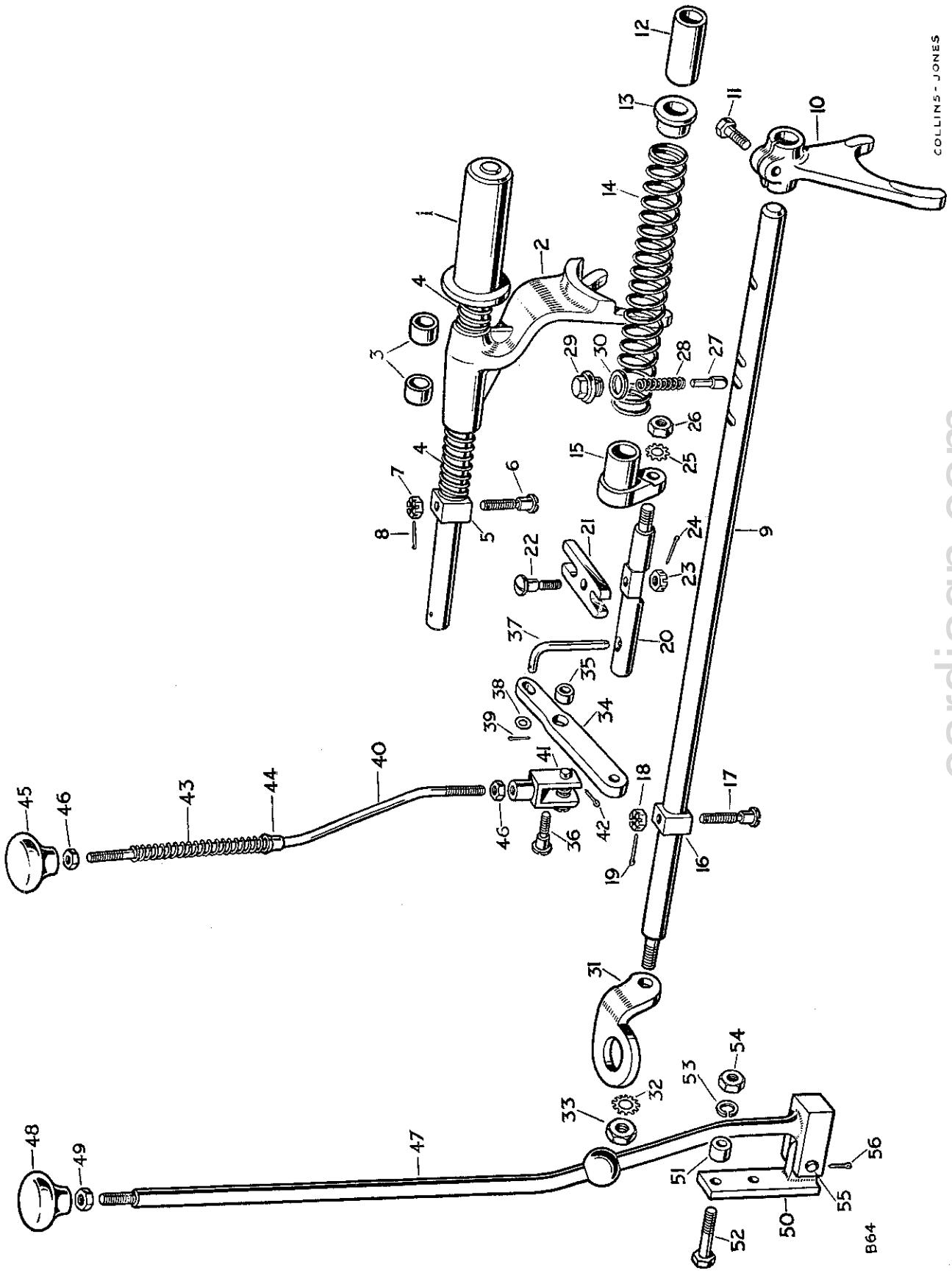

cardiagn.com

FOUR WHEEL DRIVE SELECTORS AND TRANSFER GEAR LEVER

PLATE REF.	1 2 3 4 DESCRIPTION	Qty.	Part No.	REMARKS
1	Selector shaft, four wheel drive	1	233416	
2	Selector fork complete, four wheel drive	1	233397	
3	Bush for selector fork	2	217521	
4	Spring for selector fork	2	233449	
5	Block for selector shaft	1	233406	
6	Special screw } Fixing block	1	233409	
7	Castle nut ($\frac{5}{16}$") } to selector	1	251601	
8	Split pin } shaft	1	2422	
9	Selector shaft, transfer gear change	1	233398	
10	Selector fork, transfer gear change	1	217584	
11	Set bolt ($\frac{5}{16}$" x 1" long) fixing fork	1	237160	
12	Distance tube for transfer selector shaft	1	233438	
13	Locating bush for selector shaft spring	1	233437	
14	Spring for gear change selector shaft	1	217445	
15	Connector, gear change to pivot shaft	1	233436	
16	Block for selector shaft	1	233406	
17	Special screw } Fixing block	1	233409	
18	Castle nut ($\frac{5}{16}$") } to selector	1	251601	
19	Split pin } shaft	1	2422	
20	Pivot shaft for selector shafts	1	233408	
21	Coupling, selector shafts to pivot	1	233407	
22	Special screw } Fixing coupling	1	234252	
23	Castle nut ($\frac{5}{16}$") } to	1	251601	
24	Split pin } pivot shaft	1	2422	Gearboxes numbered 16102314 and 16131688 onwards
25	Shakeproof washer } Fixing pivot shaft	1	73352	
26	Nut ($\frac{3}{8}$") } to connector	1	2827	
27	Plunger for transfer selector shaft	1	235416	
28	Spring for plunger	1	56102	
29	Plug } Retaining	1	233441	
30	Joint washer for plug } plunger	1	213960	
31	Link for selector shaft	1	232944	
32	Shakeproof washer } Fixing link to	1	77626	
33	Special nut } selector shaft	1	3764	
34	LEVER ASSEMBLY, FOUR WHEEL DRIVE	1	233414	
35	Bush for lever	1	230086	
36	Special bolt, lever to housing	1	233410	
37	Locking pin, four wheel drive lever	1	232464	
38	Plain washer } Fixing locking	1	2876	
39	Split pin } pin to lever	1	2389	
40	Selector rod, four wheel drive	1	233442	
41	Clevis complete for rod	1	215808	
42	Split pin for clevis	1	2389	
43	Spring for selector rod	1	233450	
44	Special bush for spring	1	234658	
45	Control knob for rod	1	232813	
46	Locknut ($\frac{1}{4}$") for knob and clevis	2	2823	
47	Transfer gear change lever complete	1	219729	
48	Knob for gear change lever	1	219521	
49	Locknut for knob	1	3764	

COLLINS - JONES

cardiagn.com

FOUR WHEEL DRIVE SELECTORS AND TRANSFER GEAR LEVER

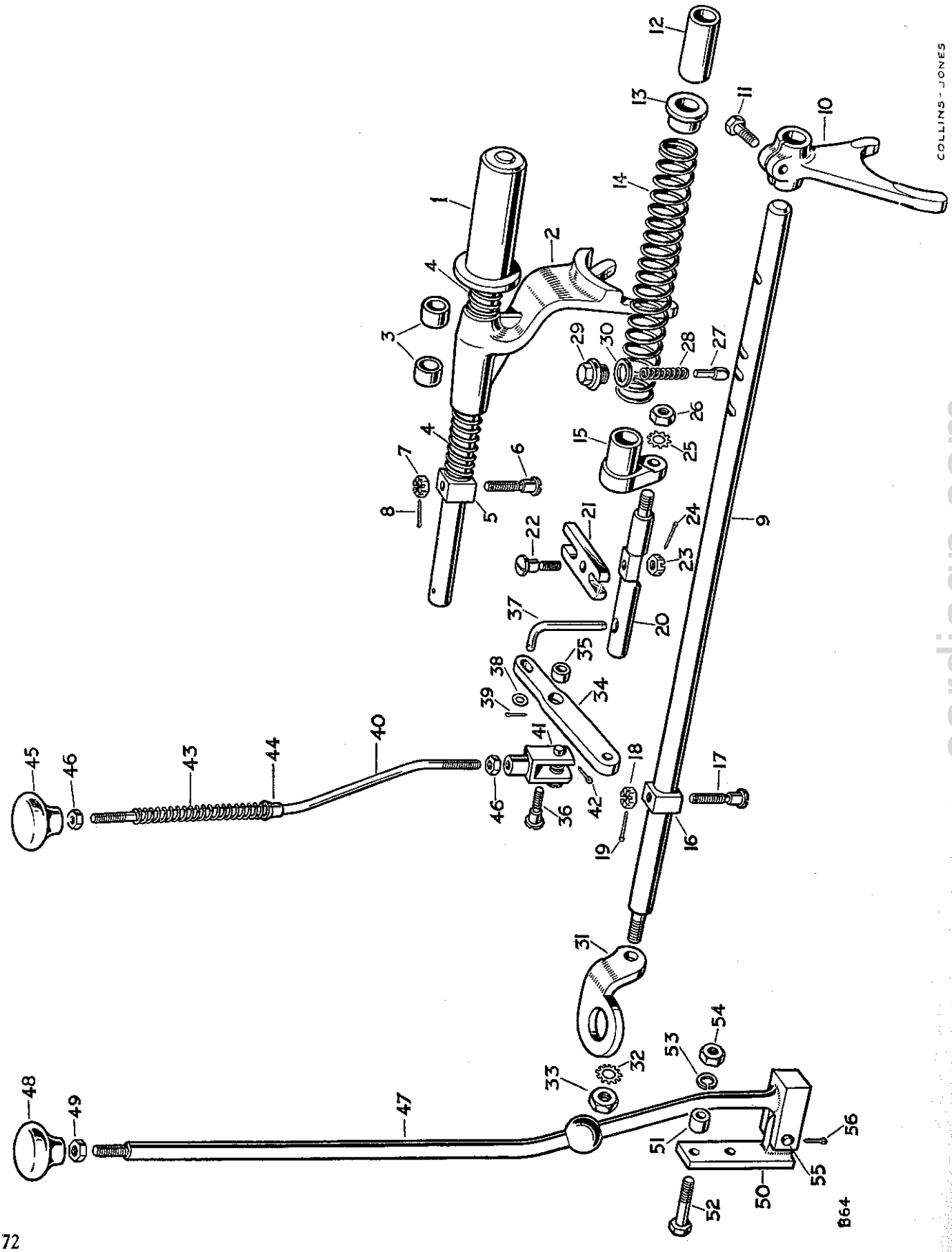

cardiagn.com

FOUR WHEEL DRIVE SELECTORS AND TRANSFER GEAR LEVER

PLATE REF.	1 2 3 4 DESCRIPTION	Qty.	Part No.	REMARKS
50	Bracket for gear change lever	1	219709	Gearboxes numbered 16102314 and 16131688 onwards
51	Distance piece for bracket	2	219804	
52	Bolt ($\frac{5}{16}$" x $1\frac{19}{32}$" long) Fixing bracket	2	215170	
53	Spring washer to	2	3075	
54	Nut ($\frac{5}{16}$") bell housing	2	2828	
55	Clevis pin Fixing gear lever	1	216421	
56	Split pin to bracket	1	2392	

COLLINS-JONES

cardiagn.com

REAR AXLE AND PROPELLER SHAFT

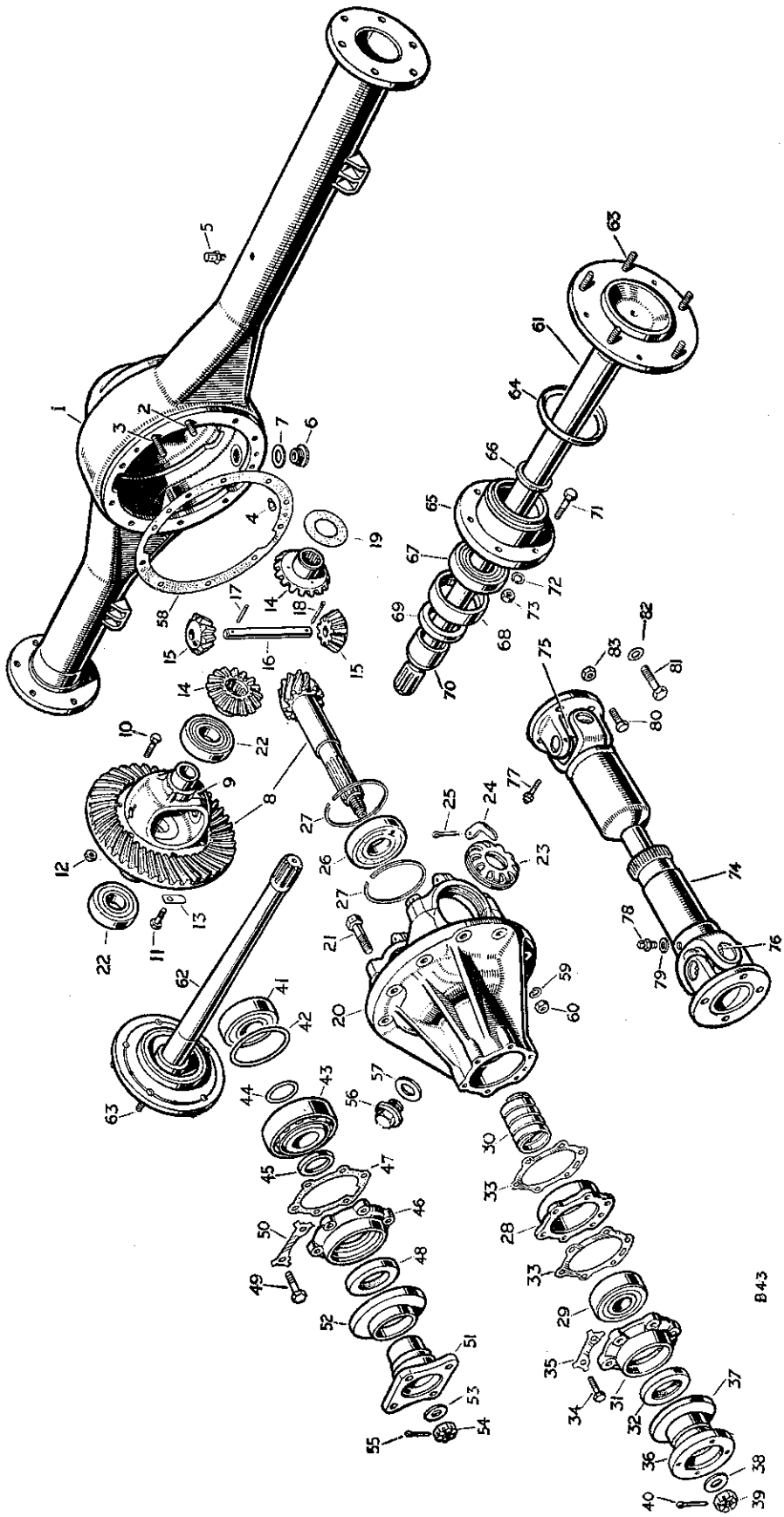

cardiagn.com

REAR AXLE AND PROPELLER SHAFT

PLATE REF. 1 2 3 4	DESCRIPTION	Qty.	Part No.	REMARKS
	REAR AXLE ASSEMBLY 4.88 ratio	1	218160	*Rear axles numberd 860001 to 861319
	REAR AXLE ASSEMBLY 4.7 ratio	1	217413	*Rear axles numbered 861320 to 867720
	REAR AXLE ASSEMBLY 4.7 ratio	1	233079	*Rear axles numbered 867721 to 06106000
	REAR AXLE ASSEMBLY 4.7 ratio	1	234027	*Rear axles numbered 06106001 onwards
1	Rear axle casing complete	1	232470	
2	Special bolt, short } Fixing	4	01565	
3	Special bolt, long } differential housing	6	01564	
	Plain washer for special bolt } to axle casing	10	2208	1951 models
4	Dowel locating differential housing	2	55705	
5	Breather, complete, for rear axle	1	42431	
6	Drain plug for rear axle casing	1	235592	
7	Joint washer for drain plug	1	230509	
	DIFFERENTIAL ASSEMBLY 4.88 ratio	1	214982	Rear axles numbered 860001 to 861319
	DIFFERENTIAL ASSEMBLY 4.7 ratio	1	214803	Rear axles numbered 861320 to 06106000
	DIFFERENTIAL ASSEMBLY 4.7 ratio	1	231345	Rear axles numbered 06106001 onwards
	Crown wheel and bevel pinion	1	260006	Rear axles numbered 860001 to 861319
8	Crown wheel and bevel pinion	1	260007	Rear axles numbered 861320 to 06106000
	Crown wheel and bevel pinion	1	233199	Rear axles numbered 06106001 onwards
9	Differential casing	1	07663	
10	Special fitting bolt	2	07691	
11	Set bolt (3/8" x 1 1/8" long) } Fixing crown	8	237179	} Rear axles numbered 860001 to 06106000
12	Nut (3/8") } wheel to	2	2827	
	Set bolt (3/8" x 1 1/8" long) } differential casing	10	237179	Rear axles numbered 06106001 onwards
13	Locker	10	2863	
14	Differential wheel	2	06735	
15	Differential pinion	2	40760	
16	Spindle for pinion	1	11378	
17	Plain pin } For	1	11379	
18	Split pin } spindle	1	2396	
	Thrust washer .040" } For	2	07902	
19	Thrust washer .045" } differential	2	07904	} As required
	Thrust washer .050" } wheels	2	50139	
	Bevel pinion housing complete	1	214983	Rear axles numbered 860001 to 861319
20	Bevel pinion housing complete	1	214802	Rear axles numbered 861320 to 06106000
	Bevel pinion housing complete	1	219635	Rear axles numbered 06106001 onwards
21	Special set bolt fixing bearing cap	4	40742	
22	Taper roller bearing for differential	2	41045	
23	Serrated nut } For bearing	2	40756	
24	Lock tab } adjustment	2	40758	
25	Split pin fixing lock tab	2	2766	
26	Roller bearing for bevel pinion	1	05369	
27	Circlip fixing bearing to housing	2	05367	} Rear axles numbered 860001 to 06106000
28	Housing for pinion ball bearing	1	03534	
29	Ball bearing for bevel pinion	1	41856	

* Rear axle assemblies include brakes.

cardiagn.com

REAR AXLE AND PROPELLER SHAFT

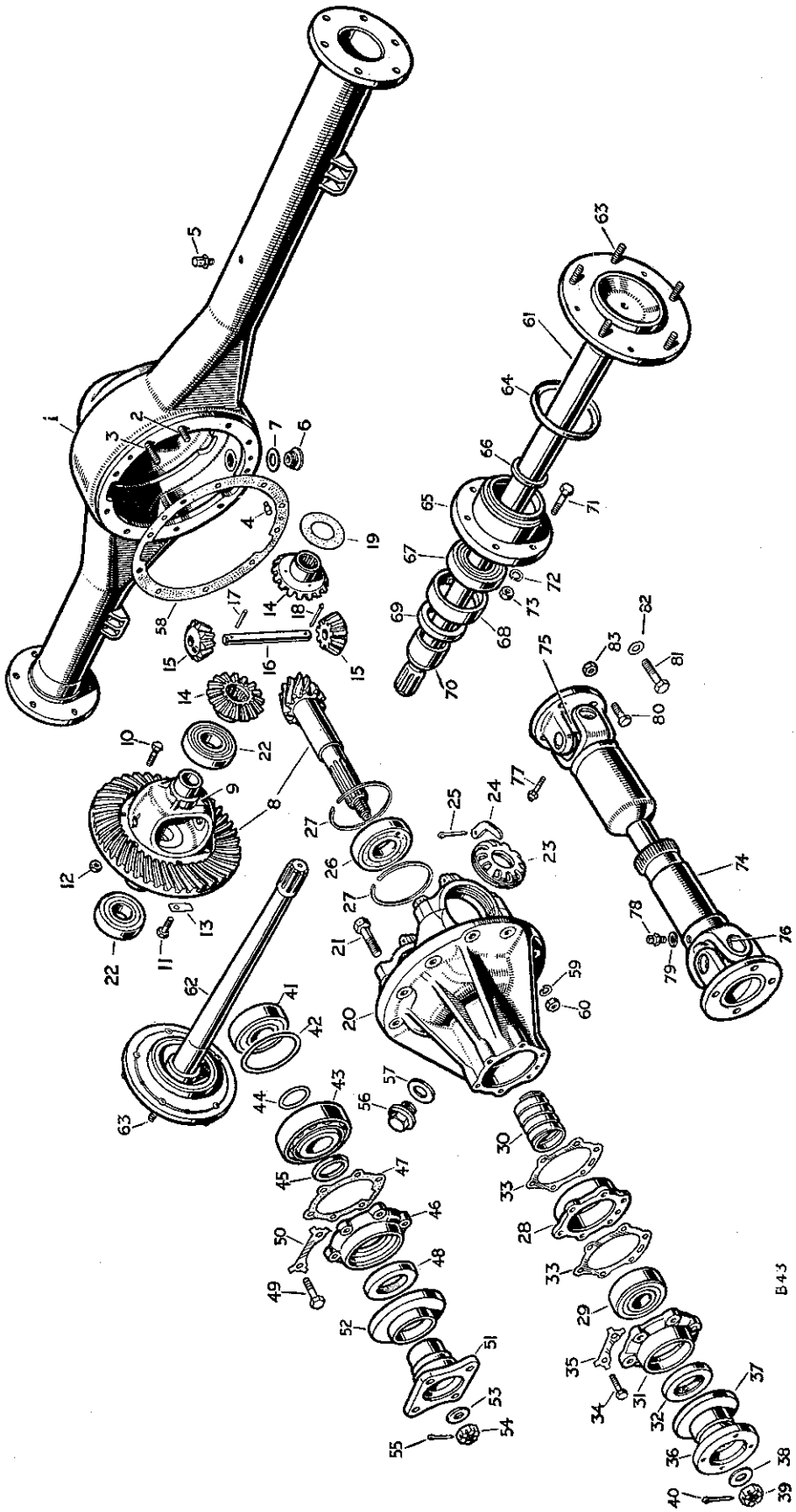

cardiagn.com

REAR AXLE AND PROPELLER SHAFT

PLATE REF.	1 2 3 4 DESCRIPTION	Qty.	Part No.	REMARKS
	Distance tube for bearing	1	06748	Rear axles numbered 860001 to 861319
30	Distance tube for bearing	1	06719	Rear axles numbered 861320 to 06106000
31	Retainer for oil seal	1	06717	
32	Oil seal for pinion	1	236417	
33	Brass shim .003″ } Adjusting	As required	41050	
	Brass shim .005″ } pinion bearing	As required	41131	
34	Special set bolt } Fixing oil	6	41048	
35	Locker } seal retainer	3	41049	Rear axles numbered 860001 to 06106000
36	Driving flange for bevel pinion	1	06718	
37	Dust shield for driving flange	1	232669	
38	Plain washer } Fixing	1	3300	
39	Special nut } driving flange to	1	3259	
40	Split pin } bevel pinion	1	2428	
41	Bearing for bevel pinion, rear	1	219544	
	Shim .003″	As required	230438	
42	Shim .005″ } For rear bearing	As required	230439	
	Shim .010″ } adjustment	As required	230440	
	Shim .020″	As required	233678	
43	Bearing for bevel pinion, front	1	219550	
	Shim .003″	As required	219547	
44	Shim .005″ } For front bearing	As required	219548	
	Shim .010″ } adjustment	As required	219549	
	Shim .020″	As required	233677	
45	Washer for pinion bearing	1	231242	Rear axles numbered 06106001 onwards
46	Retainer for oil seal	1	231241	
47	Joint washer for oil seal retainer	1	233473	
48	Oil seal for pinion	1	217507	
49	Set bolt ($\frac{5}{16}$″ x $\frac{29}{32}$″ long) } Fixing oil	6	215163	
50	Locker } seal retainer	3	41049	
51	Driving flange for bevel pinion	1	236632	
52	Dust shield for driving flange	1	232811	
53	Plain washer } Fixing	1	2264	
54	Special nut } driving flange	1	3259	
55	Split pin } bevel pinion	1	2428	
56	Oil filler plug	1	05366	
57	Joint washer for plug	1	06009	
58	Joint washer, differential to axle casing	1	07316	
59	Spring washer } Fixing differential	10	3076	
60	Nut ($\frac{3}{8}$″) } to axle casing	10	2827	

cardiagn.com

REAR AXLE AND PROPELLER SHAFT

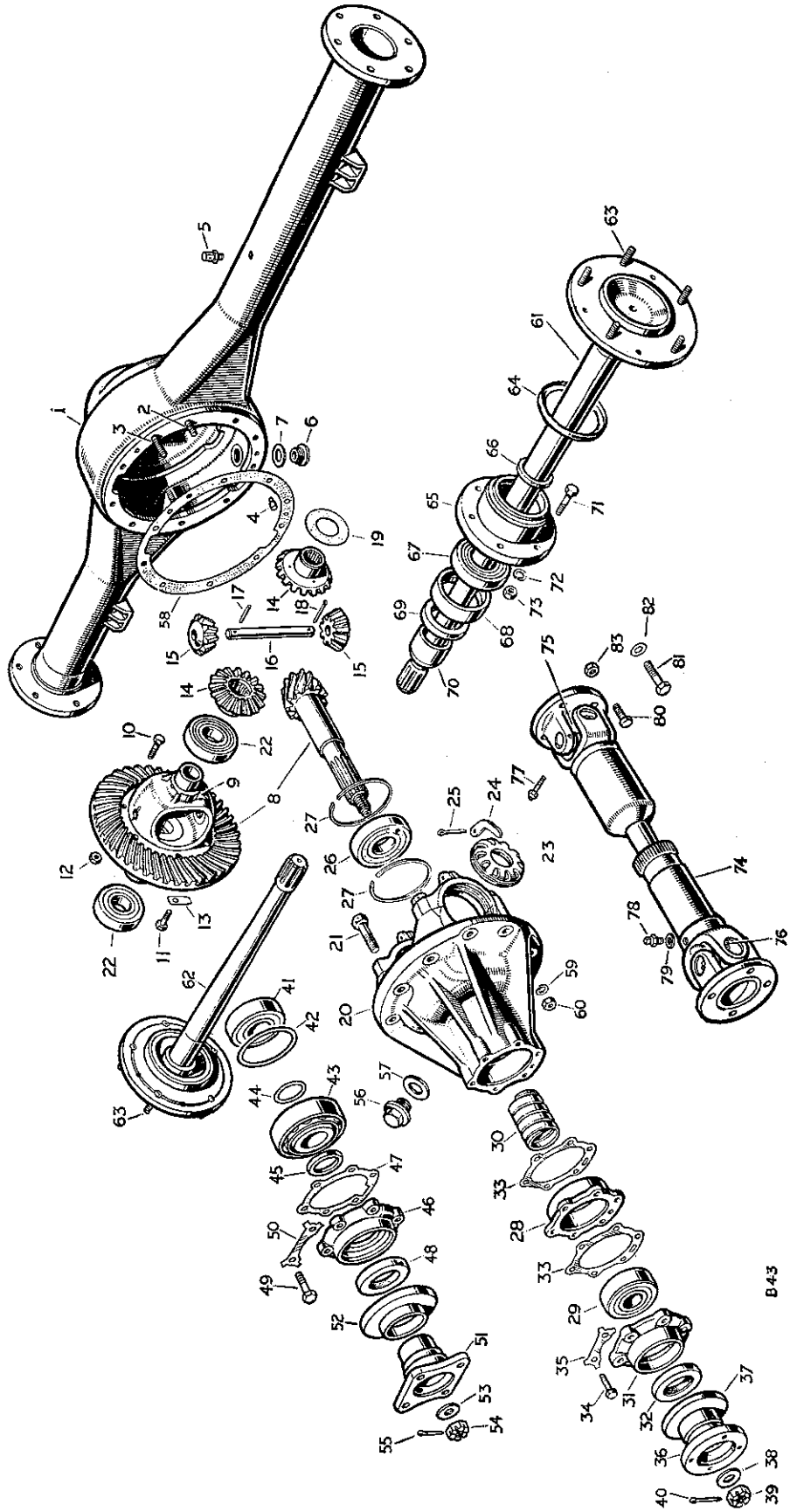

cardiagn.com

REAR AXLE AND PROPELLER SHAFT

PLATE REF.	1 2 3 4 DESCRIPTION	Qty.	Part No.	REMARKS
	REAR AXLE SHAFT COMPLETE ASSEMBLY L.H.	1	231179	Rear axles numbered 860001 to 867720 — These assemblies include the brake anchor plate
	REAR AXLE SHAFT COMPLETE ASSEMBLY R.H.	1	231180	
	REAR AXLE SHAFT COMPLETE ASSEMBLY L.H.	1	244337	Rear axles numbered 867721 onwards — These assemblies include the brake anchor plate
	REAR AXLE SHAFT COMPLETE ASSEMBLY R.H.	1	244338	
61	REAR AXLE SHAFT ASSEMBLY L.H	1	231266	
62	REAR AXLE SHAFT ASSEMBLY R.H	1	231265	
63	Stud for road wheel	10	217360	
64	Oil retainer for axle shaft	2	217372	
65	Bearing housing for rear hub	2	08276	
66	Distance washer for hub bearing	2	07317	
67	Bearing for rear hub	2	07296	
68	Sleeve for oil seal	2	07295	
69	Oil seal for rear hub	2	236923	
70	Hub retaining collar	2	07297	
71	Bolt ($\frac{3}{8}$" x $1\frac{13}{32}$" long) — Fixing bearing housing to axle case	12	250542	
72	Spring washer — Fixing bearing housing to axle case	12	3076	
73	Nut ($\frac{3}{8}$") — Fixing bearing housing to axle case	12	2827	
	PROPELLER SHAFT ASSEMBLY, REAR	1	217572	Rear axles numbered 860001 to 06106000
74	PROPELLER SHAFT ASSEMBLY, REAR	1	231272	Rear axles numbered 06106001 onwards
	Splined end — For propeller shaft	1	262468	
	Flange — For propeller shaft	2	262469	
75	Journal complete for propeller shaft	2	43023	
76	Circlip for journal	8	242522	
77	Grease nipple for journal	2	232557	
	Grease nipple, .383" dia. thread — For propeller shaft sleeve	1	219696	Alternative type check before ordering
78	Grease nipple, .250" dia thread — For propeller shaft sleeve	1	234532	
79	Washer for nipple	1	261428	
80	Special bolt — Fixing propeller shaft	4	214871	Alternative fixing, check carefully before ordering
81	Bolt ($\frac{3}{8}$" x $1\frac{1}{8}$" long) — Fixing propeller shaft	4	237341	
82	Plain washer — Fixing propeller shaft	8	2208	
83	Self-locking nut ($\frac{3}{8}$")	8	50526	

cardiagn.com

FRONT AXLE AND PROPELLER SHAFT

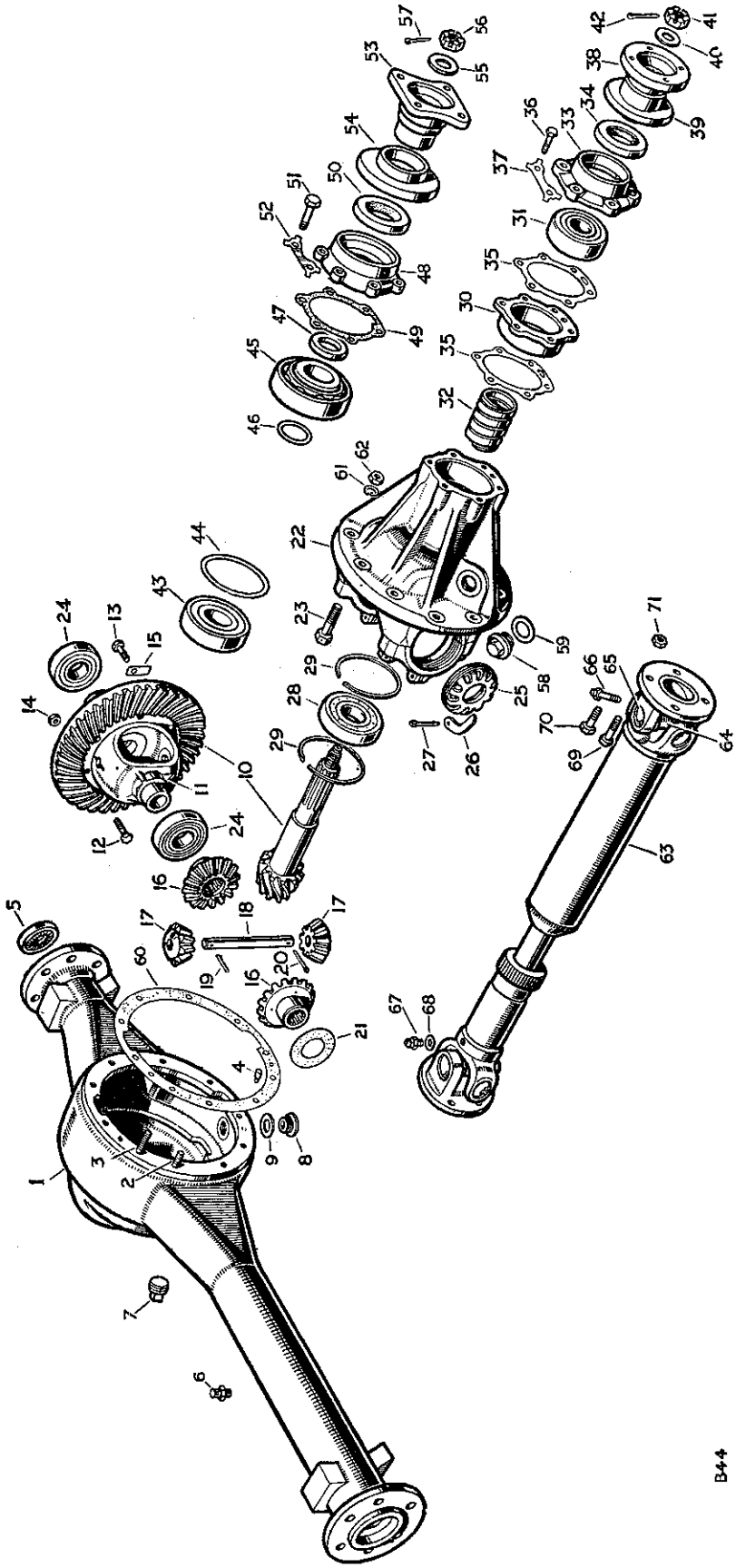

cardiagn.com

FRONT AXLE AND PROPELLER SHAFT

PLATE REF. 1 2 3 4	DESCRIPTION	Qty.	Part No.	REMARKS
	FRONT AXLE ASSEMBLY 4.88 ratio	1	218161	*R.H.D. Front axles numbered 860001 to 861319
	FRONT AXLE ASSEMBLY 4.88 ratio	1	218193	*L.H.D. Front axles numbered 860001 to 861319
	FRONT AXLE ASSEMBLY 4.7 ratio	1	217425	*R.H.D. Front axles numbered 861320 to 867720
	FRONT AXLE ASSEMBLY 4.7 ratio	1	217748	*L.H.D. Front axles numbered 861320 to 867720
	FRONT AXLE ASSEMBLY 4.7 ratio	1	233077	*R.H.D. Front axles numbered 867721 to 06106000
	FRONT AXLE ASSEMBLY 4.7 ratio	1	233078	*L.H.D. Front axles numbered 867721 to 06106000
	FRONT AXLE ASSEMBLY 4.7 ratio	1	234023	*R.H.D. Front axles numbered 06106001 to 06114000
	FRONT AXLE ASSEMBLY 4.7 ratio	1	234025	*L.H.D. Front axles numbered 06106001 to 06114000
	FRONT AXLE ASSEMBLY 4.7 ratio	1	237990	*R.H.D. Front axles numbered 06114001 onwards
	FRONT AXLE ASSEMBLY 4.7 ratio	1	237991	*L.H.D. Front axles numbered 06114001 onwards
1	Front axle casing complete, 1½" spring seat	1	232469	Front axles numbered 860001 to 06114000
1	Front axle casing complete, 2¼" spring seat	1	234565	Front axles numbered 06114001 onwards
2	Special bolt, short } Fixing differential housing to axle casing	4	01565	
3	Special bolt, long } Fixing differential housing to axle casing	6	01564	
	Plain washer for special bolt } Fixing differential housing to axle casing	10	2208	1951 models
4	Dowel locating differential housing	2	55705	
5	Oil seal in axle casing	2	217400	
6	Breather complete for front axle	1	42431	
7	Oil filler plug, front, for axle casing	1	3294	
8	Drain plug for front axle casing	1	235592	
9	Joint washer for drain plug	1	230509	
	DIFFERENTIAL ASSEMBLY 4.88 ratio	1	214982	Front axles numbered 860001 to 861319
	DIFFERENTIAL ASSEMBLY 4.7 ratio	1	214803	Front axles numbered 861320 to 06106000
	DIFFERENTIAL ASSEMBLY 4.7 ratio	1	231345	Front axles numbered 06106001 onwards
	Crown wheel and bevel pinion	1	260006	Front axles numbered 860001 to 861319
10	Crown wheel and bevel pinion	1	260007	Front axles numbered 861320 to 06106000
	Crown wheel and bevel pinion	1	233199	Front axles numbered 06106001 onwards
11	Differential casing	1	07663	
12	Special fitting bolt } Fixing crown wheel to differential casing	2	07691	} Front axles numbered 860001 to 06106000
13	Set bolt (⅜" x 1⅛" long) } Fixing crown wheel to differential casing	8	237179	} Front axles numbered 860001 to 06106000
14	Nut (⅜") } Fixing crown wheel to differential casing	2	2827	} Front axles numbered 860001 to 06106000
	Set bolt (⅜" x 1⅛" long) } Fixing crown wheel to differential casing	10	237179	Front axles numbered 06106001 onwards
15	Locker } Fixing crown wheel to differential casing	10	2863	
16	Differential wheel	2	06735	
17	Differential pinion	2	40760	
18	Spindle for pinion	1	11378	
19	Plain pin } For spindle	1	11379	
20	Split pin } For spindle	1	2396	
	Thrust washer .040" } For differential wheels	2	07902	} As required
21	Thrust washer .045" } For differential wheels	2	07904	} As required
	Thrust washer .050" } For differential wheels	2	50139	} As required
	Bevel pinion housing complete	1	214983	Front axles numbered 860001 to 861319
22	Bevel pinion housing complete	1	214802	Front axles numbered 861320 to 06106000
	Bevel pinion housing complete	1	219635	Front axles numbered 06106001 onwards
23	Special set bolt fixing bearing cap	4	40742	

* Front axle assemblies include brakes, tracta joints, front hubs and steering linkage.

cardiagn.com

FRONT AXLE AND PROPELLER SHAFT

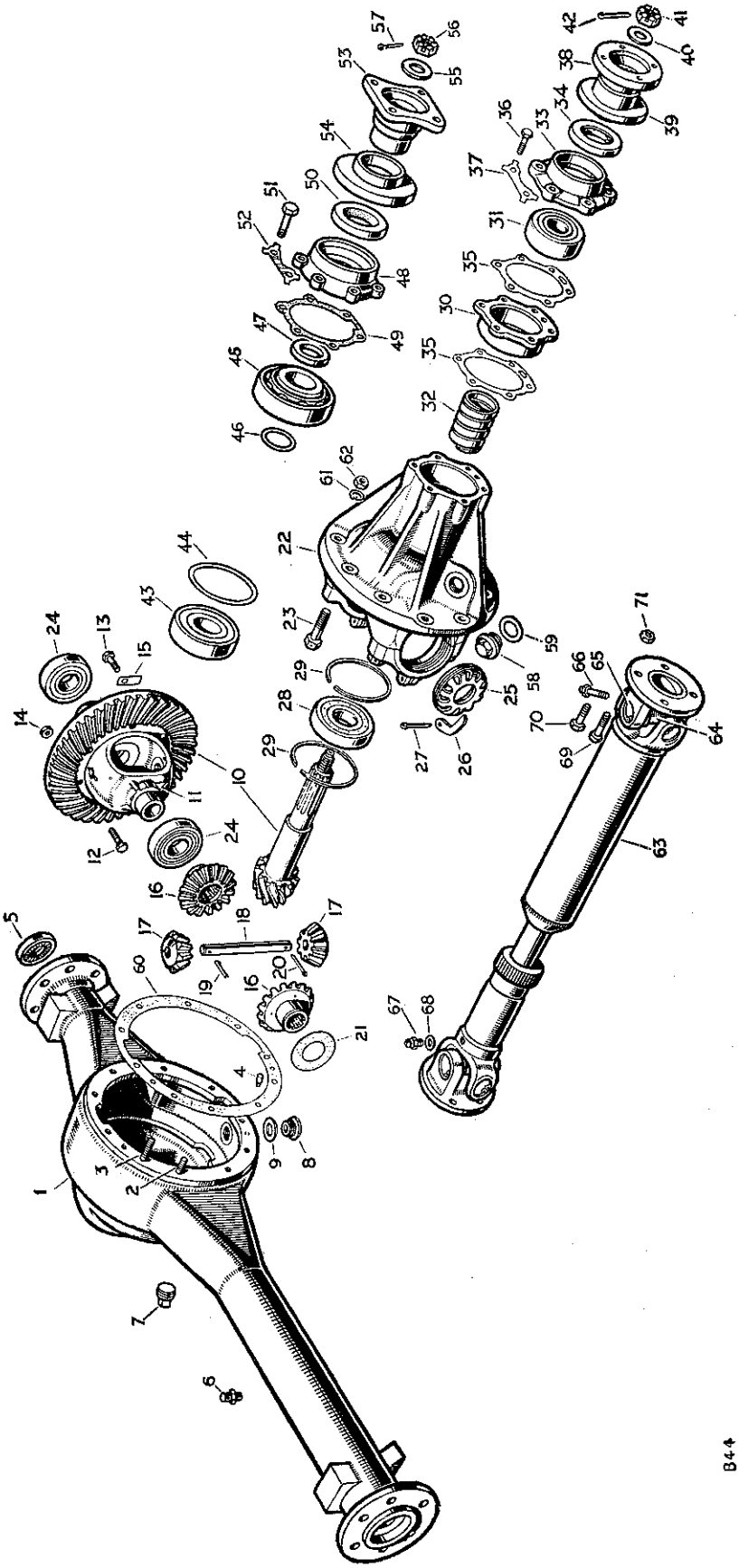

FRONT AXLE AND PROPELLER SHAFT

PLATE REF.	1 2 3 4 DESCRIPTION	Qty.	Part No.	REMARKS
24	Taper roller bearing for differential	2	41045	
25	Serrated nut } For bearing	2	40756	
26	Lock tab } adjustment	2	40758	
27	Split pin fixing lock tab	2	2766	
28	Roller bearing for bevel pinion	1	05369	
29	Circlip fixing bearing to housing	2	05367	Front axles numbered 860001 to 06106000
30	Housing for pinion ball bearing	1	03534	
31	Ball bearing for bevel pinion	1	41856	
	Distance tube for bearing	1	06748	Front axles numbered 860001 to 861319
32	Distance tube for bearing	1	06719	Front axles numbered 861320 to 06106000
33	Retainer for oil seal	1	06717	
34	Oil seal for pinion	1	236417	
35	Brass shim .003″ } Adjusting pinion	As required	41050	
	Brass shim .005″ } bearing and pinion	As required	41131	
36	Special set bolt } Fixing oil seal	6	41048	
37	Locker } retainer	3	41049	Front axles numbered 860001 to 06106000
38	Driving flange for bevel pinion	1	06718	
39	Dust shield for driving flange	1	232669	
40	Plain washer } Fixing	1	3300	
41	Special nut } driving flange to	1	3259	
42	Split pin } bevel pinion	1	2428	
43	Bearing for bevel pinion, rear	1	219544	
	Shim .003″	As required	230438	
44	Shim .005″ } For rear bearing	As required	230439	
	Shim .010″ } adjustment	As required	230440	
	Shim .020″	As required	233678	
45	Bearing for bevel pinion, front	1	219550	
	Shim .003″	As required	219547	
46	Shim .005″ } For front bearing	As required	219548	
	Shim .010″ } adjustment	As required	219549	
	Shim .020″	As required	233677	
47	Washer for pinion bearing	1	231242	Front axles numbered 06106001 onwards
48	Retainer for oil seal	1	231241	
49	Joint washer for oil seal retainer	1	233473	
50	Oil seal for pinion	1	217507	
51	Set bolt ($\frac{5}{16}$″ x $\frac{29}{32}$″ long) } Fixing oil	6	215163	
52	Locker } seal retainer	3	41049	
53	Driving flange for bevel pinion	1	236632	
54	Dust shield for driving flange	1	232811	
55	Plain washer } Fixing	1	2264	
56	Special nut } driving flange	1	3259	
57	Split pin } to bevel pinion	1	2428	
58	Oil filler plug } In differential	1	05366	
59	Joint washer for plug } casing	1	06009	
60	Joint washer, differential to axle casing	1	07316	
61	Spring washer } Fixing differential	10	3076	
62	Nut ($\frac{3}{8}$″) } to axle casing	10	2827	

cardiagn.com

FRONT AXLE AND PROPELLER SHAFT

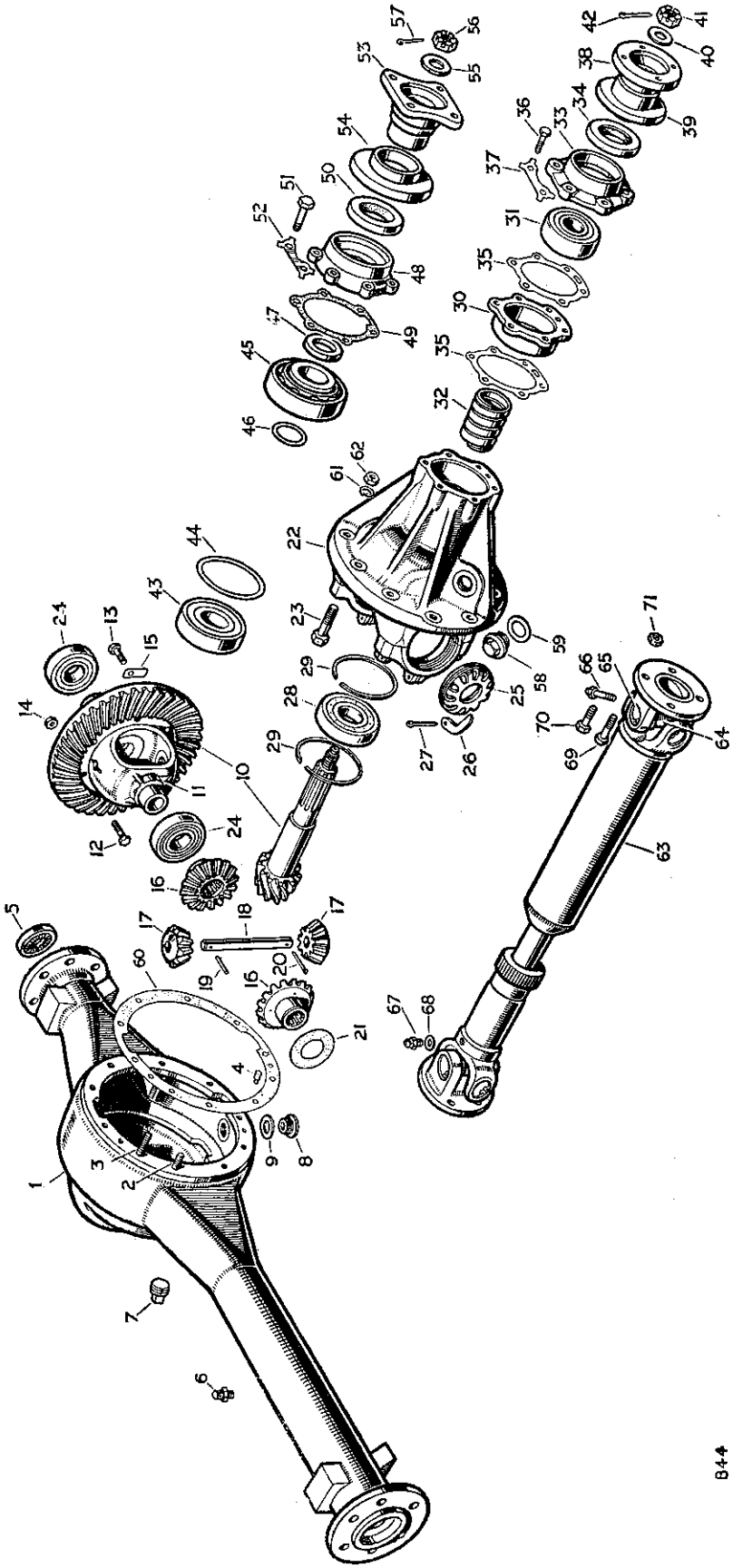

FRONT AXLE AND PROPELLER SHAFT

PLATE REF.	1 2 3 4 DESCRIPTION	Qty.	Part No.	REMARKS
	PROPELLER SHAFT ASSEMBLY, FRONT	1	217571	Front axles numbered 860001 to 06106000
63	PROPELLER SHAFT ASSEMBLY, FRONT	1	236398	Front axles numbered 06106001 onwards
	Splined end } For	1	262468	
	Flange } propeller shaft	2	262469	
64	Journal complete for propeller shaft	2	43023	
65	Circlip for journal	8	242522	
66	Grease nipple for journal	2	232557	
	Grease nipple, 383″ dia thread } For propeller	1	219696	} Alternative type, check before ordering
67	Grease nipple, 250″ dia thread } shaft sleeve	1	234532	
68	Washer for nipple	1	261428	
69	Special bolt }	8	214871	Front axles numbered 860001 to 06106000
70	Bolt (⅜″ x 1⅛″ long) } Fixing propeller shaft	8	237341	Front axles numbered 06106001 onwards
71	Self-locking nut (⅜″) }	8	50526	

cardiagn.com

TRACTA JOINTS AND FRONT HUBS

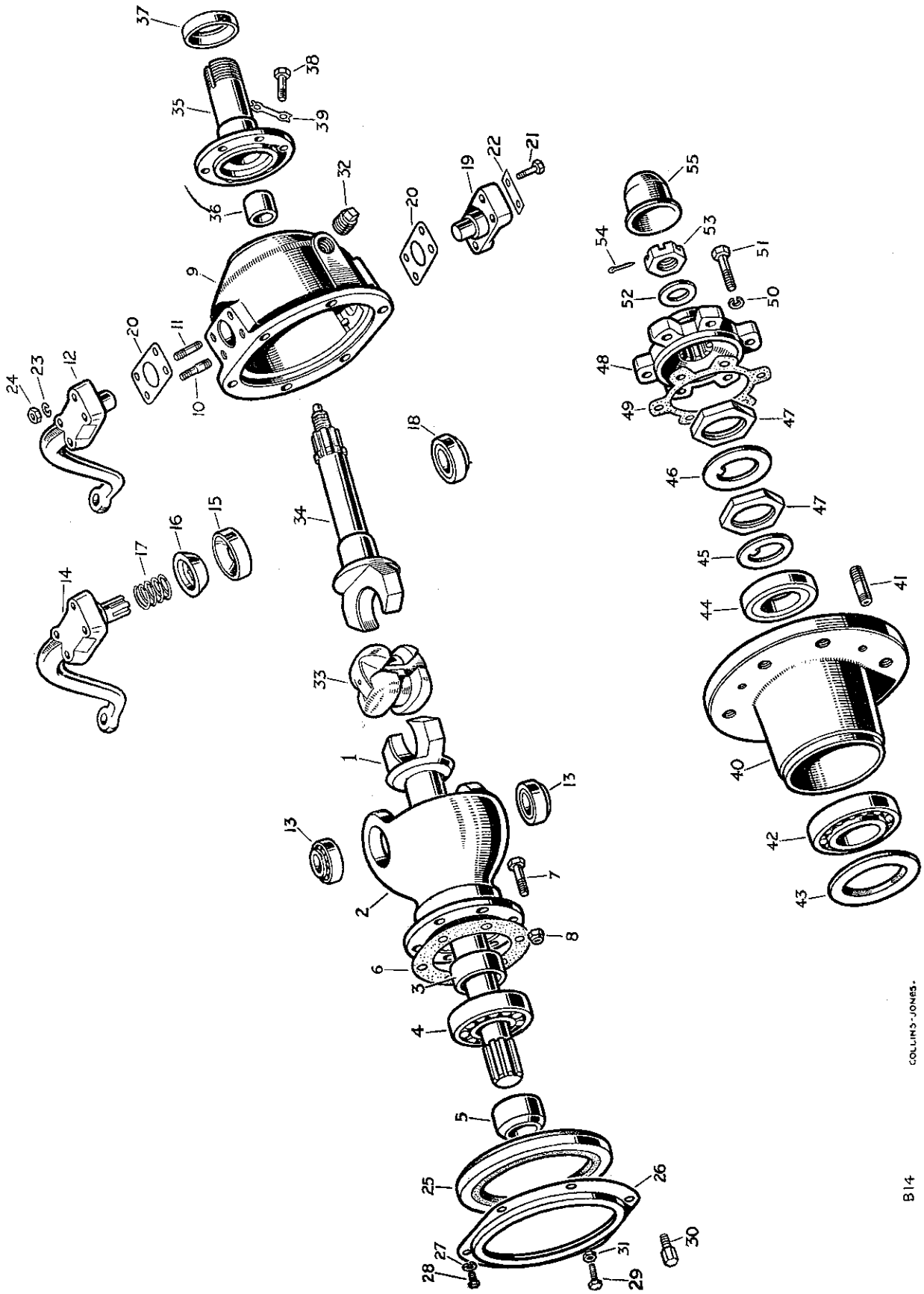

TRACTA JOINTS AND FRONT HUBS

PLATE REF.	1 2 3 4 DESCRIPTION	Qty.	Part No.	REMARKS
	HALF SHAFT ASSEMBLY FOR FRONT AXLE L.H.	1	231181	
	HALF SHAFT ASSEMBLY FOR FRONT AXLE R.H.	1	231182	
	Half shaft for front axle L.H.	1	217289	
1	Half shaft for front axle R.H.	1	217288	
2	Housing for swivel pin bearing	2	217282	
3	Distance piece for bearing	2	217399	
4	Bearing for half shaft	2	55713	
5	Retaining collar for bearing	2	217398	
6	Joint washer for housing	2	232413	
7	Bolt ($\frac{3}{8}$" x $1\frac{3}{16}$" long) } Fixing housing to	12	237341	
8	Self-locking nut ($\frac{3}{8}$") } front axle casing	12	50526	
	HOUSING ASSEMBLY FOR SWIVEL PIN L.H.	1	236534	
9	HOUSING ASSEMBLY FOR SWIVEL PIN R.H.	1	236535	
	Drain plug for housing	2	236070	
	Joint washer for drain plug	2	230511	
10	Special stud for steering lever and bracket	2	217468	
11	Stud for steering lever	6	217469	
	Swivel pin and steering lever complete L.H.	1	217419	R.H.D. } Plain type top swivel pin. Front axles numbered 860001 to 06113204 R.H.D. and 860001 to 06113115 L.H.D.
12	Swivel pin and steering lever complete R.H.	1	217420	R.H.D.
	Swivel pin and steering lever complete L.H.	1	217749	L.H.D.
	Swivel pin and steering lever complete R.H.	1	217750	L.H.D.
13	Bearing for swivel pin	4	217268	
	Swivel pin and steering lever complete L.H.	1	237236	R.H.D. } Splined type top swivel pin. Front axles numbered 06113205 onwards R.H.D. and 06113116 onwards L.H.D.
14	Swivel pin and steering lever complete R.H.	1	237237	R.H.D.
	Swivel pin and steering lever complete L.H.	1	237238	L.H.D.
	Swivel pin and steering lever complete R.H.	1	237239	L.H.D.
	Swivel pin only, splined	2	230900	
	Grooved pin fixing swivel pin	2	50453	
15	Cone seat for swivel pin, top	2	230858	
16	Cone bearing for swivel pin, top	2	237240	
17	Spring for cone bearing	2	242742	
18	Bearing for swivel pin, bottom	2	217268	
19	Swivel pin and bracket complete	2	267379	
	Shim .003" } For swivel pin bearing	As required	230007	
20	Shim .005"	As required	217453	
	Shim .010"	As required	217454	
	Shim .030"	As required	217455	
21	Set bolt ($\frac{3}{8}$" x $1\frac{1}{4}$" long) } Fixing swivel pin to swivel pin housing	8	250542	
22	Locker	4	270287	
23	Spring washer	8	3076	
24	Nut ($\frac{3}{8}$")	8	2827	
25	Oil seal for swivel pin bearing housing	2	217334	
	Swivel pin and steering lever overhaul kit	1	266750	Comprises swivel pins, cone bearings, cone seats, ball bearings and springs

cardiagn.com

TRACTA JOINTS AND FRONT HUBS

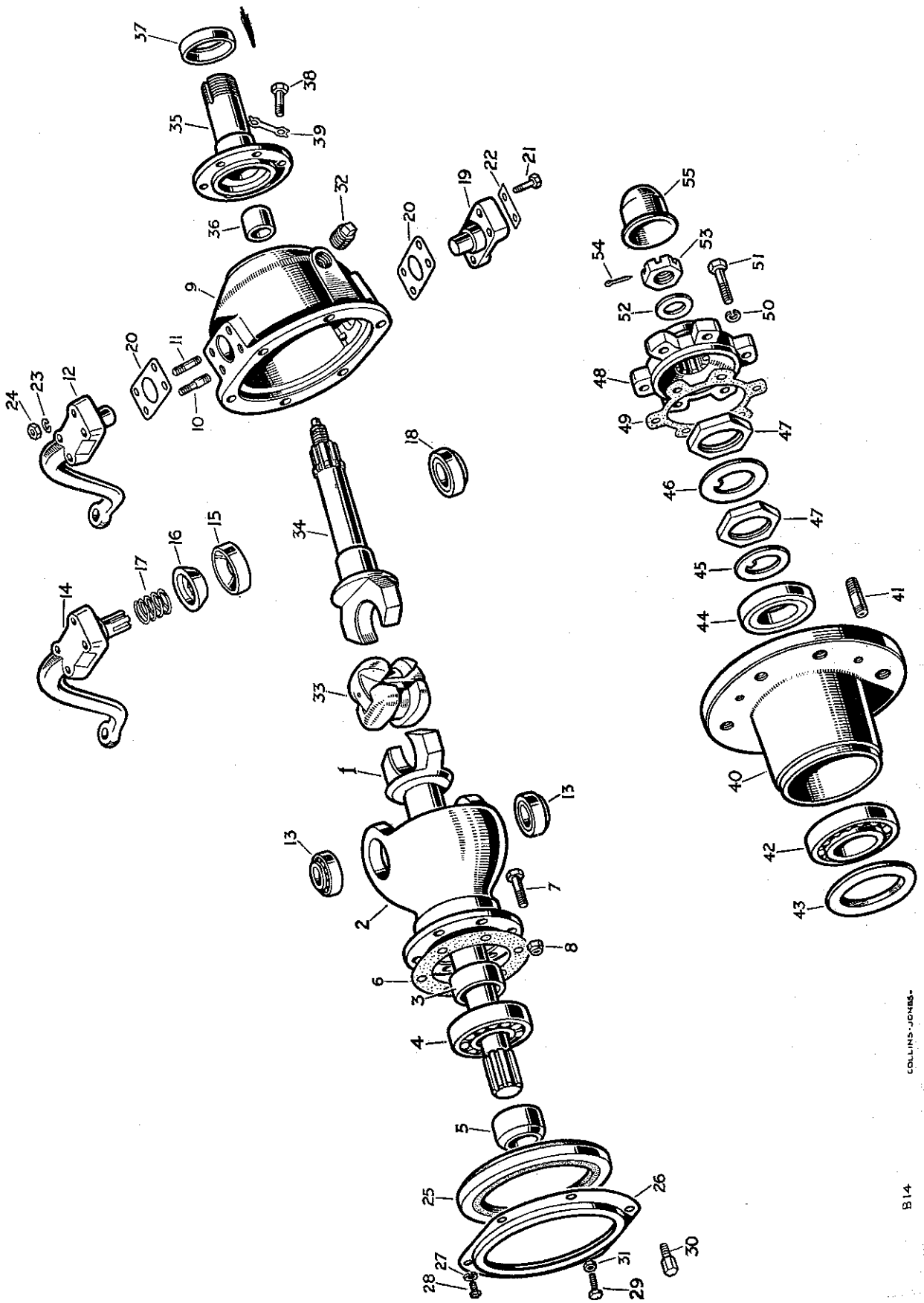

cardiagn.com

TRACTA JOINTS AND FRONT HUBS

PLATE REF.	1 2 3 4 DESCRIPTION		Qty.	Part No.	REMARKS
26	Retainer for oil seal		2	235968	
27	Spring washer	Fixing retainer to swivel pin housing	10	3074	
28	Set bolt ($\frac{1}{4}$" x $\frac{3}{8}$" long)		10	237138	
29	Adjustable lock stop bolt		2	231918	6" tyres
30	Lock stop bolt		2	233175	7" tyres
31	Locknut ($\frac{1}{4}$") for stop bolt		2	2823	
32	Oil filler plug for swivel pin housing		2	3292	
33	Tracta joint complete		2	217333	
34	Driving shaft for front hub		2	217290	
35	STUB AXLE ASSEMBLY		2	217422	
36	Bush for driving shaft		2	217354	
37	Distance piece for inner bearing		2	217351	
38	Set bolt ($\frac{3}{8}$" x 1" long)	Fixing stub axle to swivel pin housing	12	237339	
39	Locker		6	277311	
40	FRONT HUB ASSEMBLY		2	217423	
41	Stud for road wheel		10	217360	
42	Bearing for front hub, inner		2	217269	
43	Oil seal for inner bearing		2	239422	
44	Bearing for front hub, outer		2	217270	
45	Key washer	Fixing front hub bearing	2	217352	
46	Locker		2	217353	
47	Special nut		4	217355	
48	Driving member for front hub		2	217378	
49	Joint washer for driving member		2	231505	
50	Spring washer	Fixing driving member to front hub	12	3076	
51	Set bolt ($\frac{3}{8}$" x $1\frac{19}{32}$" long)		12	215331	
52	Plain washer	Fixing driving member to driving shaft	2	3300	
53	Slotted nut		2	3259	
54	Split pin		2	2428	
55	Hub cap, front		2	219098	

cardiagn.com

STEERING COLUMN

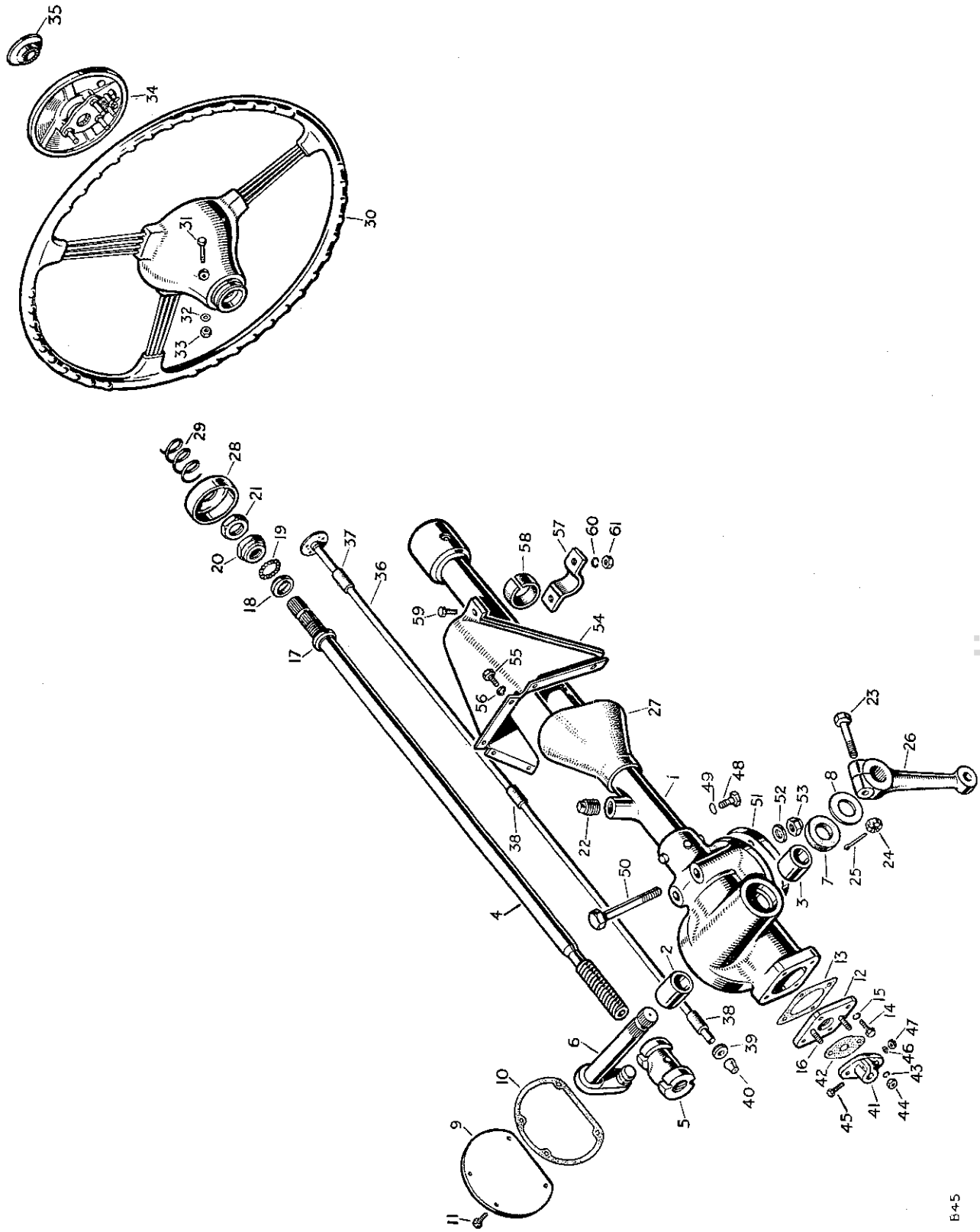

cardiagn.com

STEERING COLUMN

PLATE REF.	1 2 3 4 DESCRIPTION	Qty.	Part No.	REMARKS
	STEERING COLUMN ASSEMBLY	1	242294	R.H.D.
	STEERING COLUMN ASSEMBLY	1	242295	L.H.D.
1	STEERING BOX ASSEMBLY	1	261422	R.H.D.
	STEERING BOX ASSEMBLY	1	261423	L.H.D.
2	Bush for rocker shaft, inner, grooved	1	42709	
3	Bush for rocker shaft, outer, plain	1	42705	
4	Inner column and nut	1	242302	R.H.D.
	Inner column and nut	1	242303	L.H.D.
5	Main nut only	1	50682	R.H.D.
	Main nut only, .010" O.S.	1	262153	R.H.D.
	Main nut only	1	260031	L.H.D.
	Main nut only, .010" O.S.	1	261619	L.H.D.
6	Rocker shaft for steering box	1	261434	
7	Cork washer for rocker shaft	2	239773	
8	Retaining washer for cork	1	42257	
9	Side cover plate for steering box	1	261426	
10	Joint washer for cover plate	1	42250	
11	Bolt ($\frac{1}{4}$" x $\frac{5}{8}$" long) fixing cover plate	4	215053	
12	Bottom cover plate for steering box	1	42699	
13	Joint washer for cover plate	1	40394	
14	Bolt ($\frac{1}{4}$" x $\frac{11}{16}$" long) } Fixing	4	6936	
15	Spring washer } bottom cover	4	3074	
16	Stud for control tube clamp	2	40405	
17	Fixed ball race	1	42707	
18	Ball race ring	1	42708	
19	Steel ball ($\frac{7}{32}$" dia.) } At top of steering	18	40797	
20	Adjustable ball race } column	1	40396	
21	Locknut for ball race	1	40397	
22	Oil filler plug	1	42255	
23	Special bolt	1	40401	
24	Special castle nut } Fixing drop arm	1	251618	
25	Split pin	1	2425	
26	Drop arm	1	242259	
27	Rubber grommet for steering column	1	301283	
28	Dust shield for steering column	1	219689	
29	Spring for dust shield	1	219690	
30	Steering wheel	1	232174	
31	Bolt ($\frac{5}{16}$" x 1$\frac{29}{32}$" long) } Fixing	1	250530	
32	Plain washer } steering	2	2550	
33	Nut ($\frac{5}{16}$") } wheel	1	2828	
34	Horn button and dipper switch complete	1	272094	
35	Horn button only	1	245227	
	Contact set for horn	1	245228	
36	Control tube complete	1	217349	
37	Felt bush, top of control tube	1	08832	
38	Rubber tube, intermediate	3	07657	
39	Oil retaining washer, bottom of tube	1	07676	
40	Grommet for control tube wires	1	56169	
41	Clamp for control tube	1	07142	
42	Joint washer for clamp	1	07343	
43	Spring washer } Fixing clamp to steering	2	3074	
44	Nut ($\frac{1}{4}$") } box bottom cover	2	2823	

cardiagn.com

STEERING COLUMN

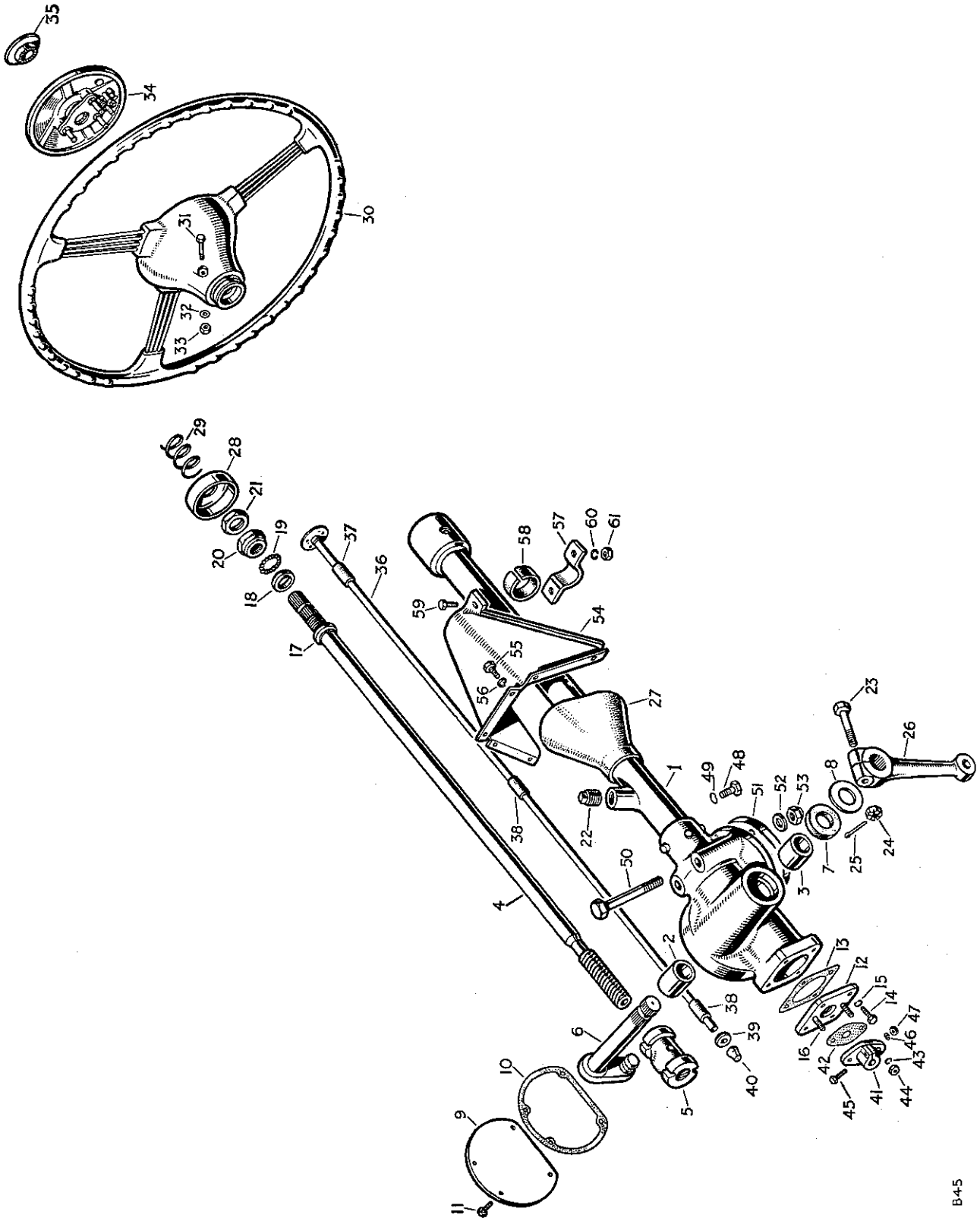

cardiagn.com

STEERING COLUMN

PLATE REF.	1 2 3 4 DESCRIPTION		Qty.	Part No.	REMARKS
45	Bolt ($\frac{1}{4}$" x $1\frac{5}{32}$" long)	Fixing control tube to clamp	1	237144	
46	Spring washer		1	3074	
47	Nut ($\frac{1}{4}$")		1	2823	
48	Set bolt ($\frac{5}{16}$" x $\frac{11}{16}$" long)	Fixing steering box to dash	1	237158	Vehicles numbered 860001 to 861500
49	Spring washer		1	3075	
50	Bolt ($\frac{7}{16}$" x $3\frac{9}{16}$" long)		2	215404	
51	Packing plate, tapered		1	302575	
52	Plain washer		2	3680	
53	Self-locking nut ($\frac{7}{16}$")		2	50527	
54	Support bracket for steering column		1	300713	
55	Set bolt ($\frac{1}{4}$" x $\frac{9}{16}$" long)	Fixing bracket to dash	6	237139	
56	Spring washer		6	3074	
57	Clip for steering column		1	300715	
58	Rubber strip for clip		1	300716	
59	Bolt ($\frac{1}{4}$" x $\frac{21}{32}$" long)	Fixing clip to support bracket	2	218552	
60	Spring washer		2	3074	
61	Nut ($\frac{1}{4}$")		2	3819	

cardiagn.com

STEERING RELAY AND LINKAGE

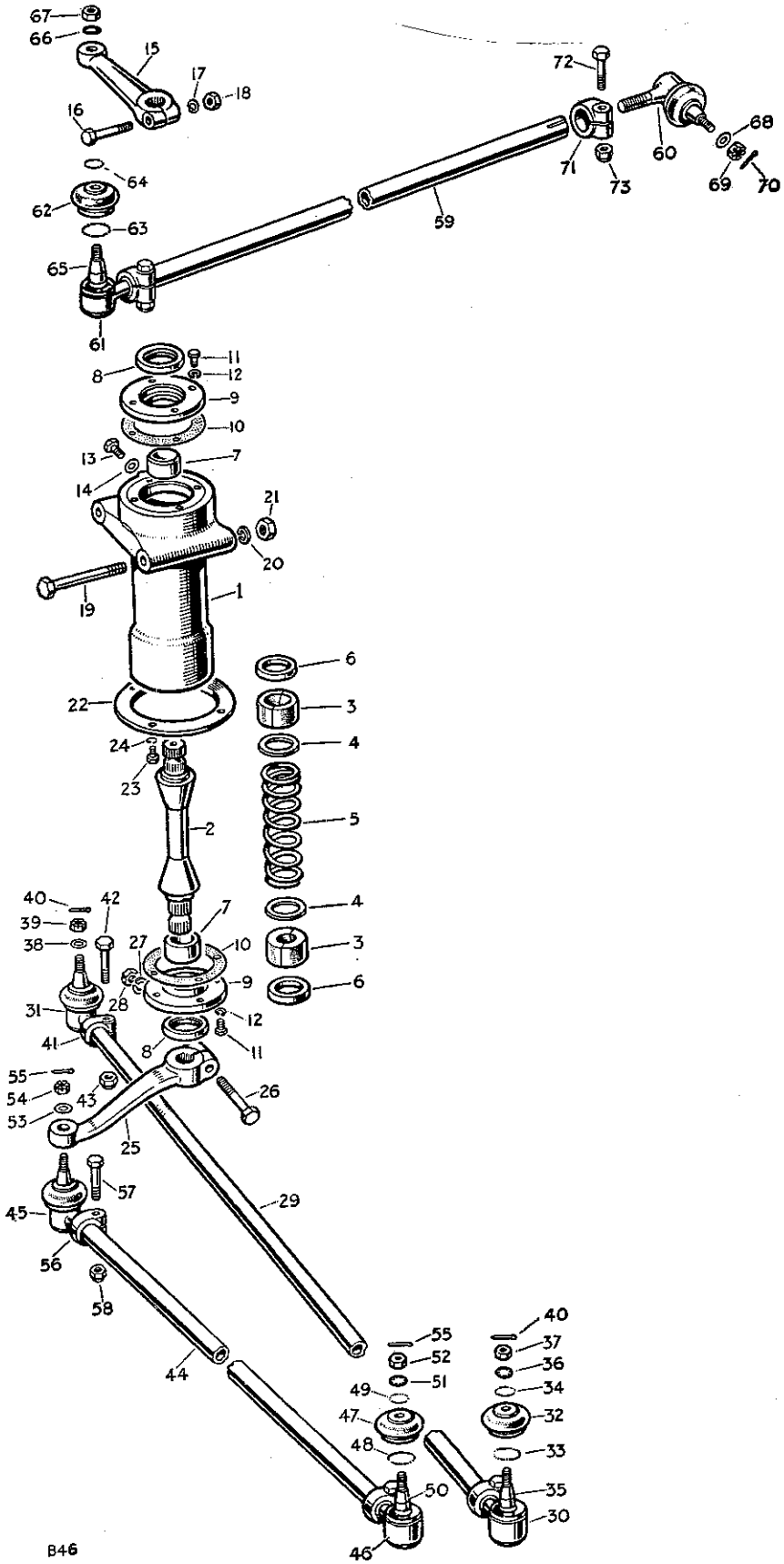

PLAT REF.

1 2 3 4 5 6 7 8 9 10 11 12 13 14 15 16 17 18 19 20 21 22 23 24 25 26 27 28 29 30 31 32 33 34 35 36 37 38 39 40 41 42 43 44 45 46 47 48 49 50

www.landroverspares.com

STEERING RELAY AND LINKAGE

PLATE REF.	1 2 3 4 DESCRIPTION	Qty.	Part No.	REMARKS
	STEERING RELAY COMPLETE ASSEMBLY	1	232693	
1	Housing for relay shaft	1	230757	
2	Shaft for steering relay levers	1	230762	
3	Split bush for housing	2	230758	
4	Washer for spring	2	230760	
5	Spring for bushes	1	230759	
6	Thrust washer for shaft	2	241388	
7	Distance piece for shaft	2	230184	
8	Oil seal for shaft	2	213340	
9	Retainer for oil seal	2	230294	
10	Joint washer for retainer	2	230295	
11	Special bolt } Fixing retainer	8	231299	
12	Spring washer } to housing	8	3074	
13	Plug for oil hole	1	217510	
14	Joint washer for plug	1	3052	
15	Relay lever, upper	1	242180	
16	Bolt ($\frac{7}{16}$" x $2\frac{5}{32}$" long) }	1	215390	
17	Spring washer } Fixing lever to shaft	1	3077	
18	Nut ($\frac{7}{16}$") }	1	2836	
19	Bolt ($\frac{5}{16}$" x $3\frac{13}{32}$" long) } Fixing	2	237336	
20	Spring washer } housing to	2	3075	
21	Nut ($\frac{5}{16}$") } chassis frame	2	2828	
22	Flange plate for relay mounting	1	217694	
23	Set bolt ($\frac{1}{4}$" x $\frac{5}{8}$" long) } Fixing flange plate	4	215053	
24	Spring washer } to chassis frame	4	3074	
25	Relay lever, lower	1	217365	
26	Bolt ($\frac{7}{16}$" x $2\frac{5}{32}$" long) }	1	215390	
27	Spring washer } Fixing lever to shaft	1	3077	
28	Nut ($\frac{7}{16}$") }	1	2836	
29	STEERING TRACK ROD ASSEMBLY	1	240185	
	Steering track rod only	1	217315	
30	BALL JOINT ASSEMBLY R.H. THREAD	1	231183	
31	BALL JOINT ASSEMBLY L.H. THREAD	1	231184	
32	Rubber cover for ball joint	2	214649	
33	Spring ring, cover to body	2	214685	
34	Spring ring } Cover	2	214684	
35	Retainer } to ball	2	214662	
36	Shakeproof washer }	2	77626	} Alternative type, check before ordering
37	Special nut ($\frac{7}{16}$")	2	230865	
38	Plain washer } Fixing ball joints to	2	3680	
39	Castle nut } lever	2	2822	
40	Split pin }	2	2393	
41	Clip for ball joint	2	03437	
42	Bolt ($\frac{3}{8}$" x $1\frac{29}{32}$" long) } Fixing ball	2	215280	
43	Self-locking nut ($\frac{3}{8}$") } joint clips	2	50526	
44	STEERING DRAG LINK ASSEMBLY	1	240186	
	Steering drag link only	1	217316	
45	BALL JOINT ASSEMBLY R.H. THREAD	1	231183	
46	BALL JOINT ASSEMBLY L.H. THREAD	1	231184	
47	Rubber cover for ball joint	2	214649	
48	Spring ring, cover to body	2	214685	
49	Spring ring } Cover	2	214684	
50	Retainer } to ball	2	214662	

cardiagn.com

STEERING RELAY AND LINKAGE

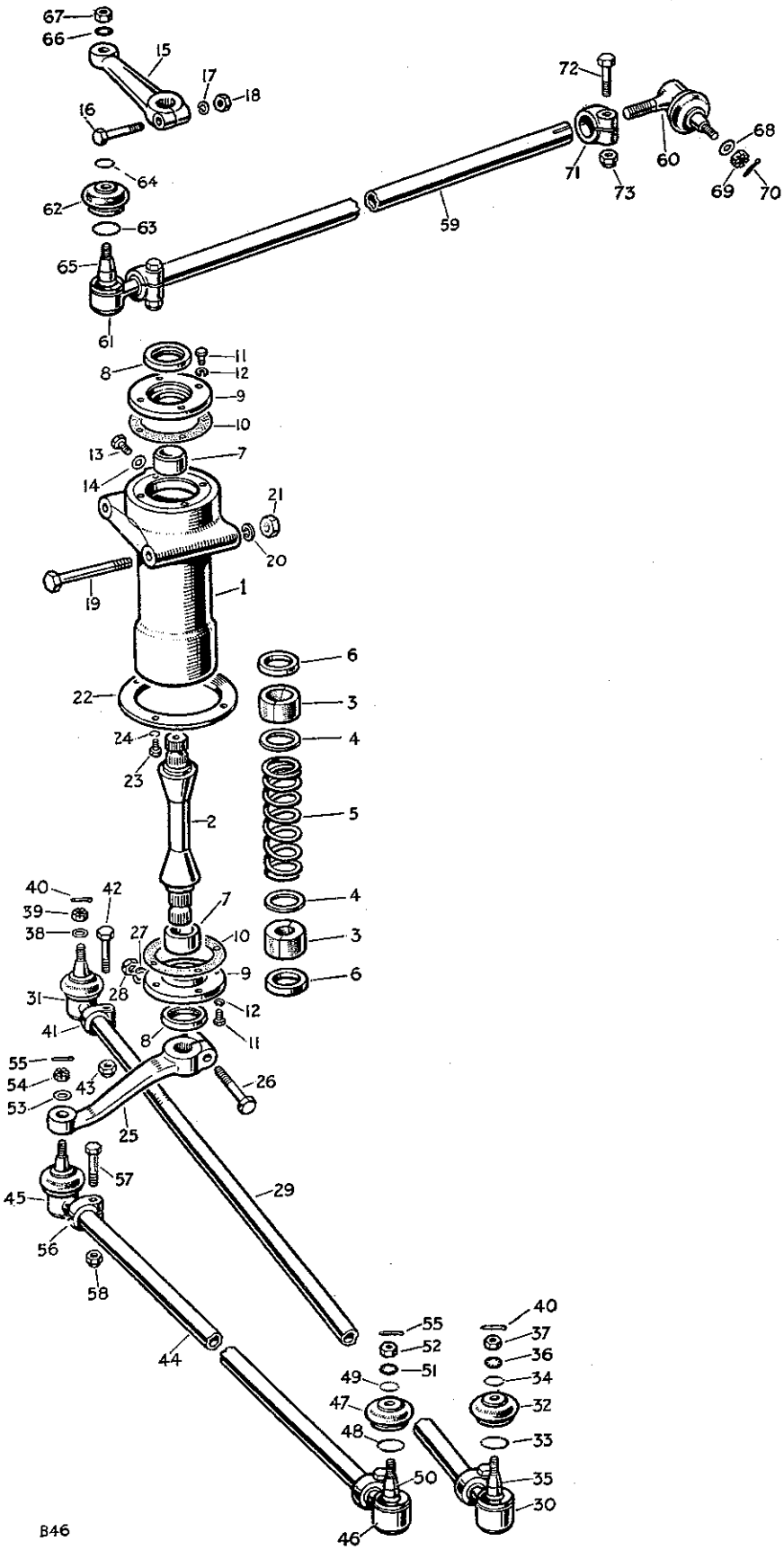

cardiagn.com

STEERING RELAY AND LINKAGE

PLATE REF.	1 2 3 4 DESCRIPTION		Qty.	Part No.	REMARKS
51	Shakeproof washer	Fixing ball joints to levers	2	77626	Alternative type, check before ordering
52	Special nut ($\frac{7}{16}$")		2	230865	
53	Plain washer		2	3680	
54	Castle nut		2	2822	
55	Split pin		2	2393	
56	Clip for ball joint	Fixing ball joint clips	2	03437	
57	Bolt ($\frac{3}{8}$" x $1\frac{29}{32}$" long)		2	215280	
58	Self-locking nut ($\frac{3}{8}$")		2	50526	
59	LONGITUDINAL STEERING TUBE ASSEMBLY		1	240187	
	Longitudinal steering tube only		1	217317	
60	BALL JOINT ASSEMBLY R.H. THREAD		1	231183	
61	BALL JOINT ASSEMBLY L.H. THREAD		1	231184	
62	Rubber cover for ball joint		2	214649	
63	Spring ring, cover to body		2	214685	
64	Spring ring	Cover to ball	2	214684	
65	Retainer		2	214662	
66	Shakeproof washer	Fixing ball joints to levers	2	77626	Alternative type, check before ordering
67	Special nut ($\frac{7}{16}$")		2	230865	
68	Plain washer		2	3680	
69	Castle nut		2	2822	
70	Split pin		2	2393	
71	Clip for ball joint	Fixing ball joint clips	2	03437	
72	Bolt ($\frac{3}{8}$" x $1\frac{29}{32}$" long)		2	215280	
73	Self-locking nut ($\frac{3}{8}$")		2	50526	

cardiagn.com

BRAKES, FOOT

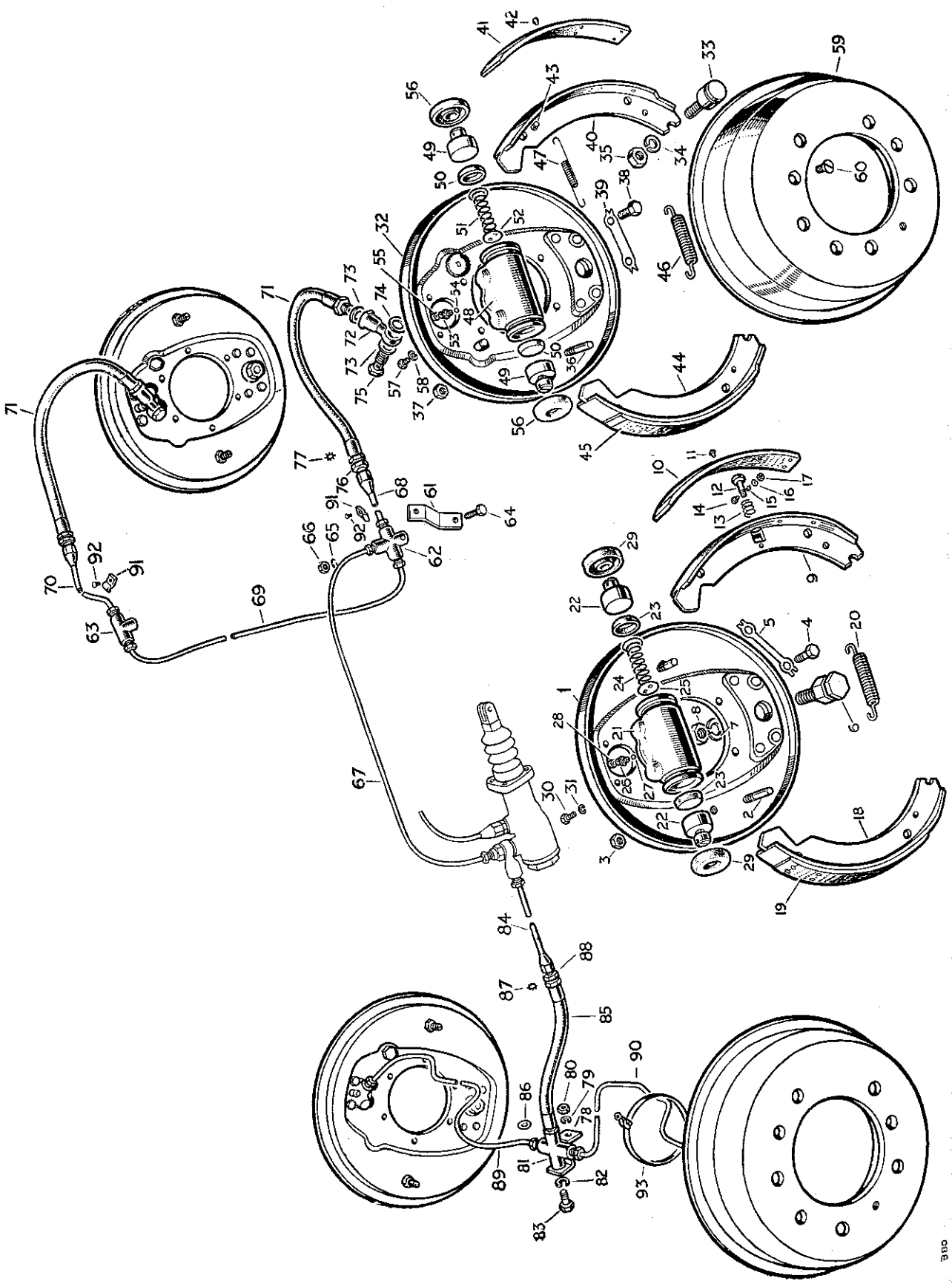

BRAKES, FOOT

PLATE REF.	1 2 3 4	DESCRIPTION	Qty.	Part No.	REMARKS
1		BRAKE ANCHOR PLATE ASSEMBLY	4	218963	
2		Steady post for brake shoe	4	219620	
3		Locknut for steady post	4	212835	
4		Set bolt (3/8" x 1" long) } Fixing front anchor	12	237339	
5		Locker } plate to axle case	6	232416	
		Bolt (3/8" x 1 13/32" long) } Fixing	12	215329	
		Spring washer } rear anchor plate	12	3076	
		Nut (3/8") } to axle case	12	2827	
6		Anchor pin for brake shoe	4	218969	
7		Spring washer } Fixing	4	218970	
8		Special nut } anchor pin	4	218971	
9		BRAKE SHOE ASSEMBLY, BOXED PAIR	4	264498	
10		Lining for brake shoe	8	231438	
11		Rivet fixing lining	80	218975	
12		Pressure plunger	4	218976	
13		Spring for pressure plunger	4	218977	
14		Special screw	4	230501	
15		Spring washer } Fixing pressure plunger	4	230213	
16		Plain washer } to brake shoe	4	230503	} Axles numbered 860001 to 867720
17		Special nut	4	230502	
20		Pull-off spring for brake shoe	4	218983	
		WHEEL CYLINDER ASSEMBLY, L.H. FRONT	1	218982	
		WHEEL CYLINDER ASSEMBLY, R.H. FRONT	1	218981	
		WHEEL CYLINDER ASSEMBLY, L.H. REAR	1	212936	
		WHEEL CYLINDER ASSEMBLY, R.H. REAR	1	212937	
24		Spring for piston, front	2	212919	
		Spring for piston, rear	2	212943	
25		Washer for spring, front	4	218990	
		Washer for spring, rear	4	212942	
26		Bleed screw	4	212921	
		Repair kit, front	1	266681	
		Repair kit, rear	1	266679	
30		Special set screw } Fixing wheel	8	218984	
31		Spring washer } cylinder	8	219025	

cardiagn.com

BRAKES, FOOT

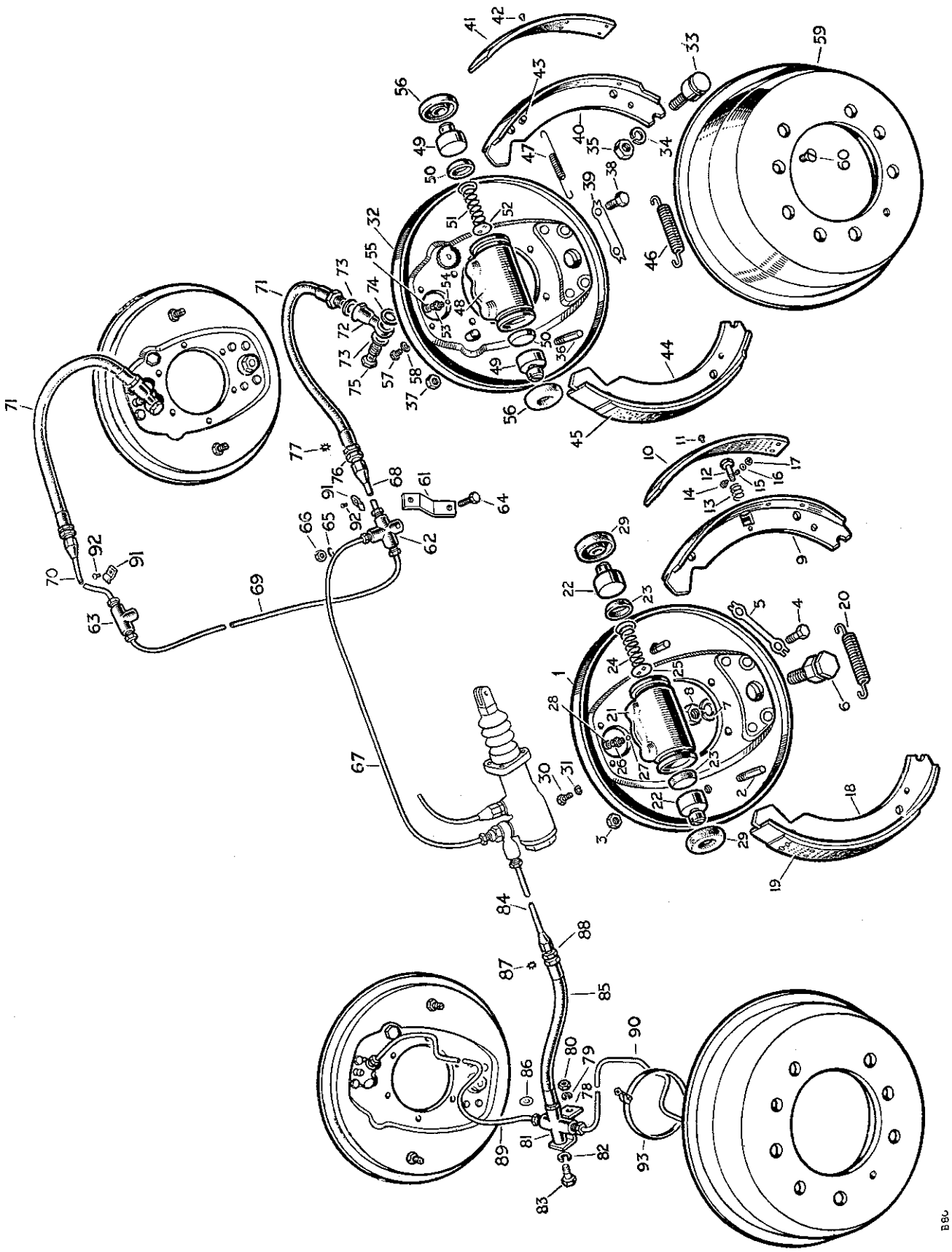

cardiagn.com

BRAKES, FOOT

PLATE REF.	1 2 3 4 DESCRIPTION	Qty.	Part No.	REMARKS
	BRAKE ANCHOR PLATE ASSEMBLY, L.H.	2	243287	
32	BRAKE ANCHOR PLATE ASSEMBLY, R.H.	2	243288	
33	Anchor pin for brake shoe	4	218969	
34	Spring washer } Fixing	4	218970	
35	Special nut } anchor pin	4	218971	
36	Shoe steady post	8	219620	
37	Locknut for steady post	8	212835	
38	Set bolt (3/8" x 1" long) } Fixing front anchor	12	237339	
39	Locker } plate to axle case	6	277311	
	Bolt (3/8" x 1 13/32" long) } Fixing	12	215329	
	Spring washer } rear anchor plate	12	3076	
	Nut (3/8") } to axle case	12	2827	
	BRAKE SHOE ASSEMBLY L.H., BOXED PAIR	2	264039	
40	BRAKE SHOE ASSEMBLY R.H., BOXED PAIR	2	264040	
41	Lining for brake shoe	8	231438	
42	Rivet fixing lining	80	218975	
43	Spring post for brake shoe	2	232074	
46	Pull-off spring for brake shoe	4	218983	Axles numbered 867721 onwards
47	Pull-off spring for leading shoe	4	232098	
	WHEEL CYLINDER ASSEMBLY L.H., FRONT	1	212913	
	WHEEL CYLINDER ASSEMBLY R.H., FRONT	1	212912	
	WHEEL CYLINDER ASSEMBLY L.H., REAR	1	232077	
	WHEEL CYLINDER ASSEMBLY R.H., REAR	1	232078	
51	Spring for piston, front	2	212919	
	Spring for piston, rear	2	212943	
52	Washer for spring, front	4	232107	
	Washer for spring, rear	4	242117	
53	Bleed screw	4	212921	
	Repair kit, front	1	275744	
	Repair kit, rear	1	266687	
57	Special set screw } Fixing	8	218984	
58	Spring washer } wheel cylinder	8	219025	
59	Brake drum	4	218149	
60	Set screw fixing brake drum	12	1510	

cardiagn.com

BRAKES, FOOT

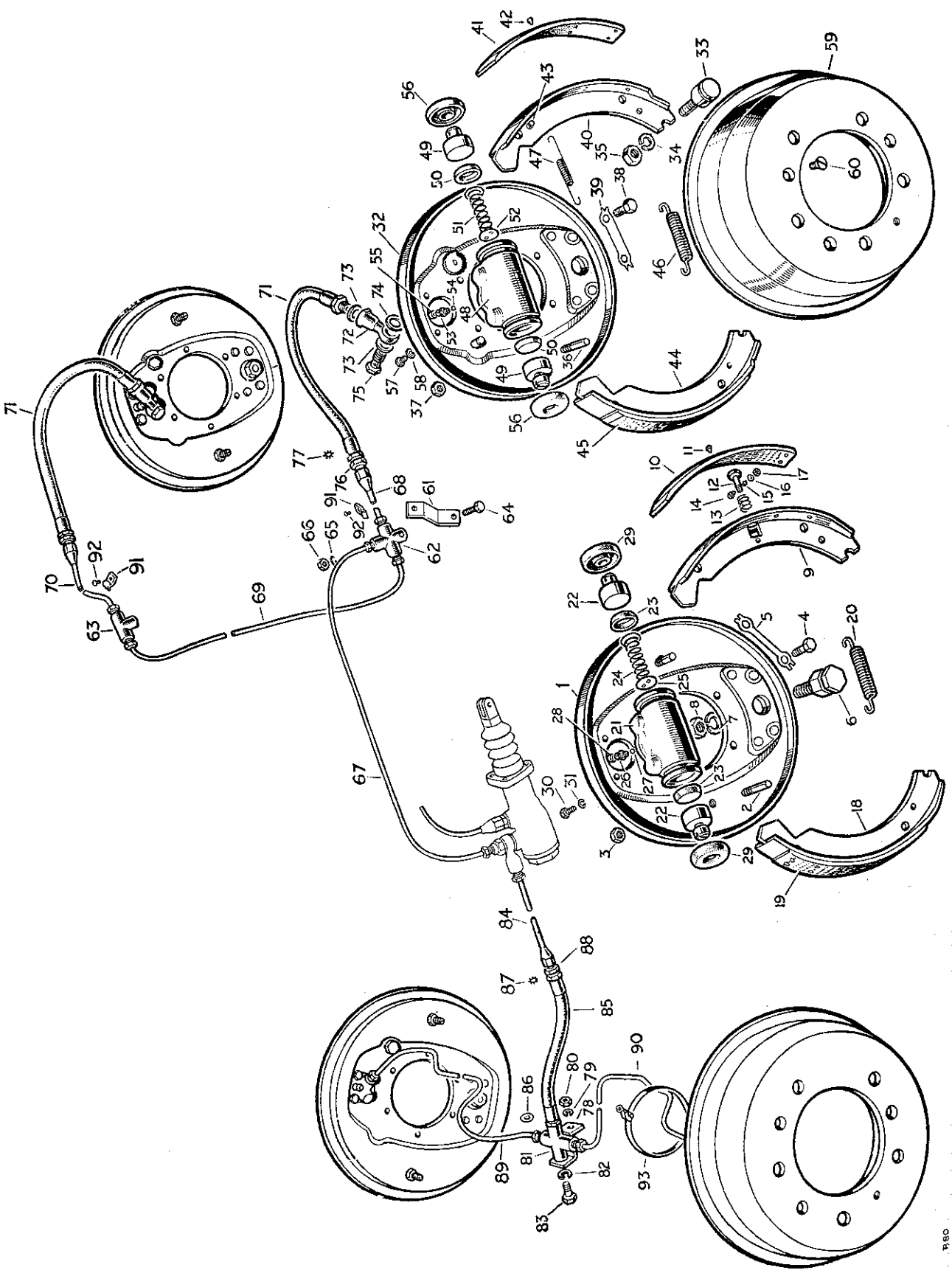

BRAKES, FOOT

PLATE REF.	1 2 3 4 DESCRIPTION	Qty.	Part No.	REMARKS
61	Bracket for "T" piece and union	2	235278	
62	"T" piece } For front	1	219827	
63	Double-ended union } brake pipes	1	219828	
64	Bolt ($\frac{1}{4}''$ x $1\frac{1}{4}''$ long) } Fixing	2	235569	
65	Spring washer } "T" piece and	2	3074	
66	Nut ($\frac{1}{4}''$) } union to brackets	2	2823	
67	Brake pipe complete, master cylinder to "T" piece	1	219813	
68	Brake pipe complete, "T" piece to hose	1	219816	
69	Brake pipe complete, "T" piece to union	1	219814	
70	Brake pipe complete, union to hose	1	219816	
71	Hose complete for front wheels	2	219824	
72	Angle banjo }	2	219825	
73	Joint washer, small } Fixing hoses to front	4	216914	
74	Joint washer, large } wheel cylinders	2	216915	
75	Banjo bolt }	2	216910	
76	Special nut } Fixing hoses to brackets	2	216912	
77	Shakeproof washer } on chassis frame	2	216913	
78	Bracket for hose on rear axle	1	219571	
79	Spring washer } Fixing bracket	1	3076	
80	Nut ($\frac{3}{8}''$) } to rear axle	1	2827	
81	"T" piece on rear axle	1	219826	
82	Spring washer } Fixing "T" piece	1	3075	
83	Set bolt ($\frac{5}{16}''$ x $\frac{19}{32}''$ long) } to bracket	1	215759	
84	Brake pipe complete, master cylinder to rear hose	1	219817	R.H.D.
	Brake pipe complete, master cylinder to rear hose	1	219822	L.H.D.
85	Hose complete to rear axle	1	219824	
86	Joint washer, hose to "T" piece	1	216914	
87	Shakeproof washer } Fixing hose	1	216913	
88	Special nut } to bracket	1	216912	
89	Brake pipe complete on rear axle L.H.	1	219818	
90	Brake pipe complete on rear axle R.H.	1	219819	
91	Clip, brake pipes to chassis frame	4	216708	R.H.D.
	Clip, brake pipes to chassis frame	6	216708	L.H.D.
92	Drive screw fixing clips	3	72626	R.H.D.
	Drive screw fixing clips	5	72626	L.H.D.
93	Clip on rear axle	2	11820	

cardiagn.com

BRAKE MASTER CYLINDER AND BRAKE LEVER

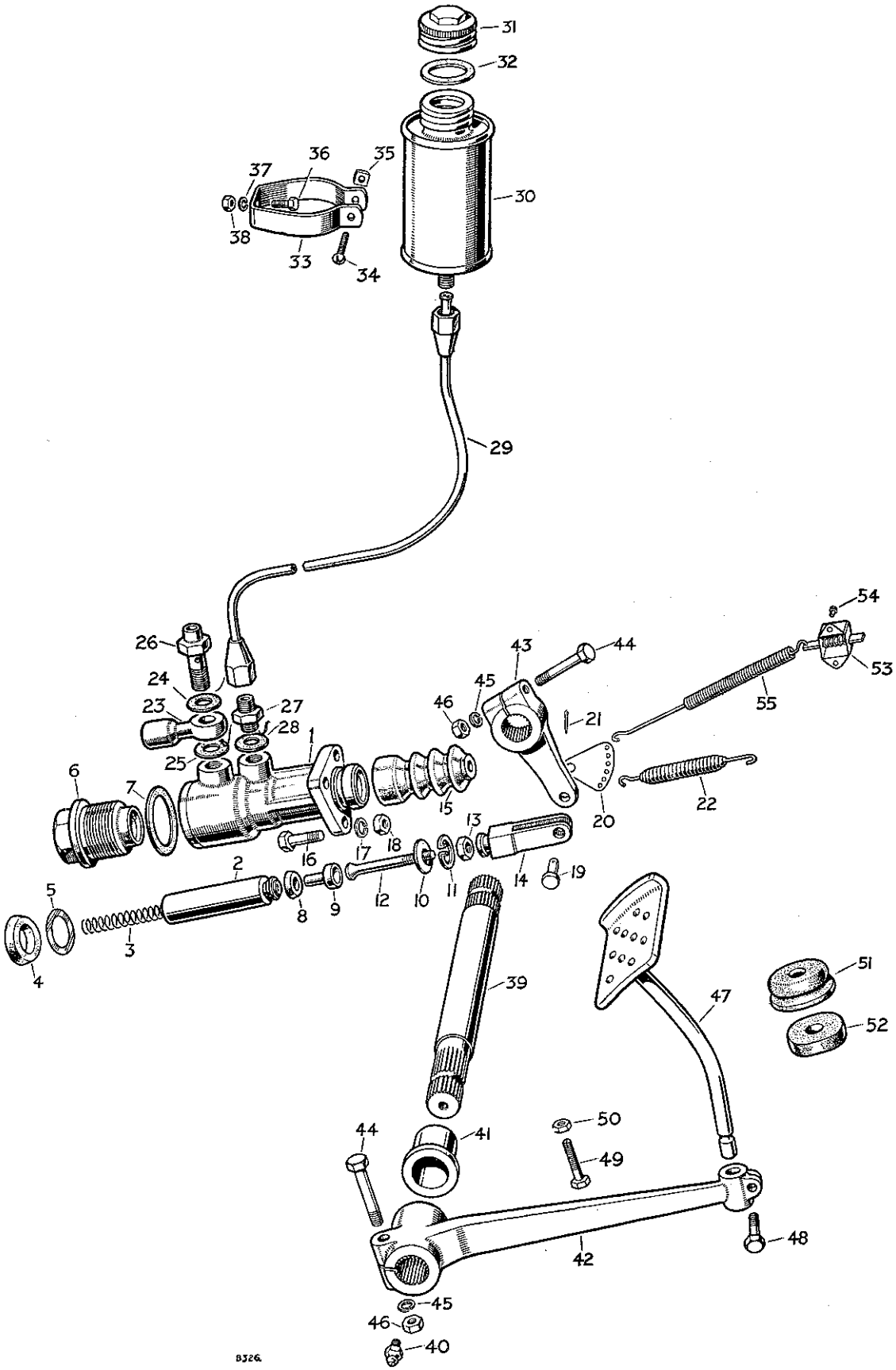

PLATE REF.
1
3
10
16
17
18
19
20
21
22
23
24
25
26
27
28
29
30
31
32
33
34
35
36
37
38
39
40
41
42
43

carpdiagn.com

BRAKE MASTER CYLINDER AND BRAKE LEVER

PLATE REF.	1 2 3 4 DESCRIPTION	Qty.	Part No.	REMARKS
1	BRAKE MASTER CYLINDER ASSEMBLY	1	235006	
3	Return spring for piston	1	217698	
10	Retaining washer for piston	1	217701	
	Repair kit	1	278524	
16	Bolt ($\frac{5}{16}$" x $\frac{29}{32}$" long) } Fixing master	3	215163	
17	Spring washer } cylinder to	3	3075	
18	Nut ($\frac{5}{16}$") } chassis frame	3	2828	
19	Pin for fork end }	1	218070	
	Spring anchor, 1 hole type } Fixing fork end to	1	9775 }	Alternative type, check before ordering
20	Spring anchor, 6 hole type } brake operating lever	1	235010 }	
21	Split pin }	1	2422	
22	Pull-off spring for master cylinder	1	07048	
23	Banjo }	1	216909	
24	Joint washer, small } On master cylinder for	1	216914	
25	Joint washer, large } front and rear pipes	1	216915	
26	Banjo bolt }	1	219829	
27	Union } In master cylinder	1	216911	
28	Joint washer } for supply pipe	1	216915	
	Brake pipe complete, for supply tank, 26" long	1	230284	R.H.D. Vehicles numbered 860001 to 861000
29	Brake pipe complete, for supply tank, 15" long	1	230894	R.H.D. Vehicles numbered 861001 onwards
	Brake pipe complete, for supply tank, 52" long	1	230285	L.H.D. Vehicles numbered 860001 to 861000
	Brake pipe complete, for supply tank, 57½" long	1	230895	L.H.D. Vehicles numbered 861001 onwards
30	SUPPLY TANK ASSEMBLY FOR MASTER CYLINDER	1	216905	
31	Filler cap for tank	1	260819	
32	Joint washer for cap	1	260820	
33	Clip for tank	1	271636	
34	Special bolt } Fixing clip	1	217637	
35	Special nut } to tank	1	217638	
36	Bolt ($\frac{1}{4}$" x $\frac{9}{16}$" long) }	1	237139	
37	Spring washer } Fixing clip to dash	1	3074	
38	Nut ($\frac{1}{4}$") }	1	2823	
39	Spindle for brake pedal	1	271819	
40	Grease nipple for spindle	1	218073	R.H.D.
	Grease nipple for spindle	1	219697	L.H.D.
41	Bush for spindle	2	218014	
42	Lever for brake pedal	1	217816	
43	Operating lever, brake master cylinder	1	218068	

cardiagn.com

BRAKE MASTER CYLINDER AND BRAKE LEVER

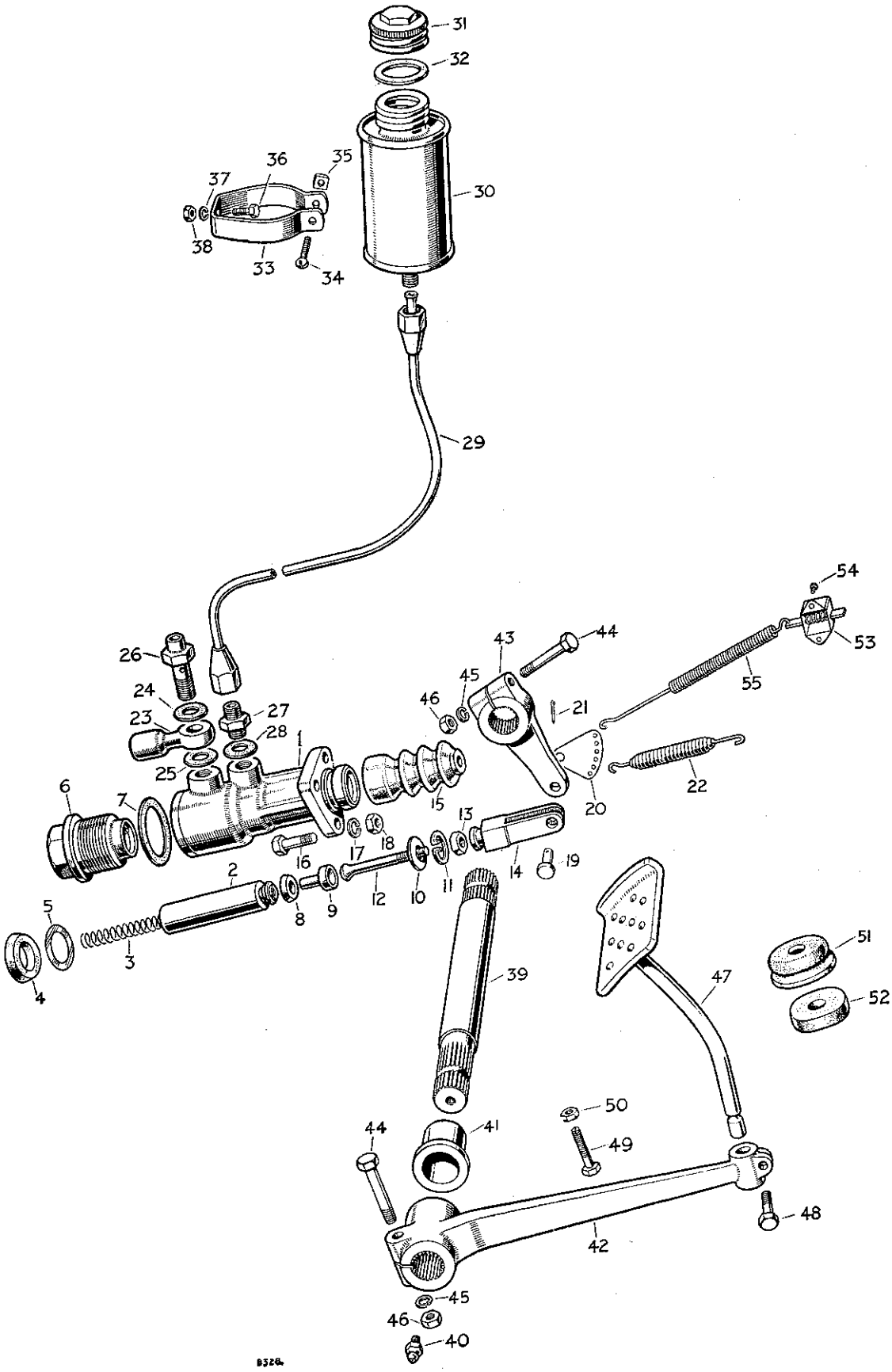

PLATE REF.
44
45
46
47
48
49
50
51
52
53
54
55

cardiagn.com

BRAKE MASTER CYLINDER AND BRAKE LEVER

PLATE REF.	1 2 3 4 DESCRIPTION	Qty.	Part No.	REMARKS
44	Bolt ($\frac{5}{16}$" x $1\frac{13}{16}$" long) } Fixing levers to spindle	2	215172	
45	Spring washer } Fixing levers to spindle	2	3075	
46	Nut ($\frac{5}{16}$") } Fixing levers to spindle	2	2828	
47	Rod and pad complete for brake pedal	1	240136	R H D
	Rod and pad complete for brake pedal	1	219527	L H D
	Rod and pad complete for brake pedal	1	240137	Swiss vehicles
48	Bolt ($\frac{5}{16}$" x $\frac{29}{32}$" long) fixing brake rod to lever	1	215163	
49	Special stop bolt for brakes	1	218052	
50	Locknut ($\frac{1}{4}$") for stop bolt	1	2823	
51	Rubber grommet } For brake pedal rod	1	70620	
52	Felt washer } For brake pedal rod	1	70621	
53	Switch for stop lamp	1	07160	
54	Drive screw fixing switch	2	72626	
	Spring connecting switch to brake lever, 6" long	1	230196	} Alternative type, check before ordering
55	Spring connecting switch to brake lever, $5\frac{1}{4}$" long	1	243225	} Alternative type, check before ordering

cardiagn.com

HAND BRAKE LEVER, R.H.D.

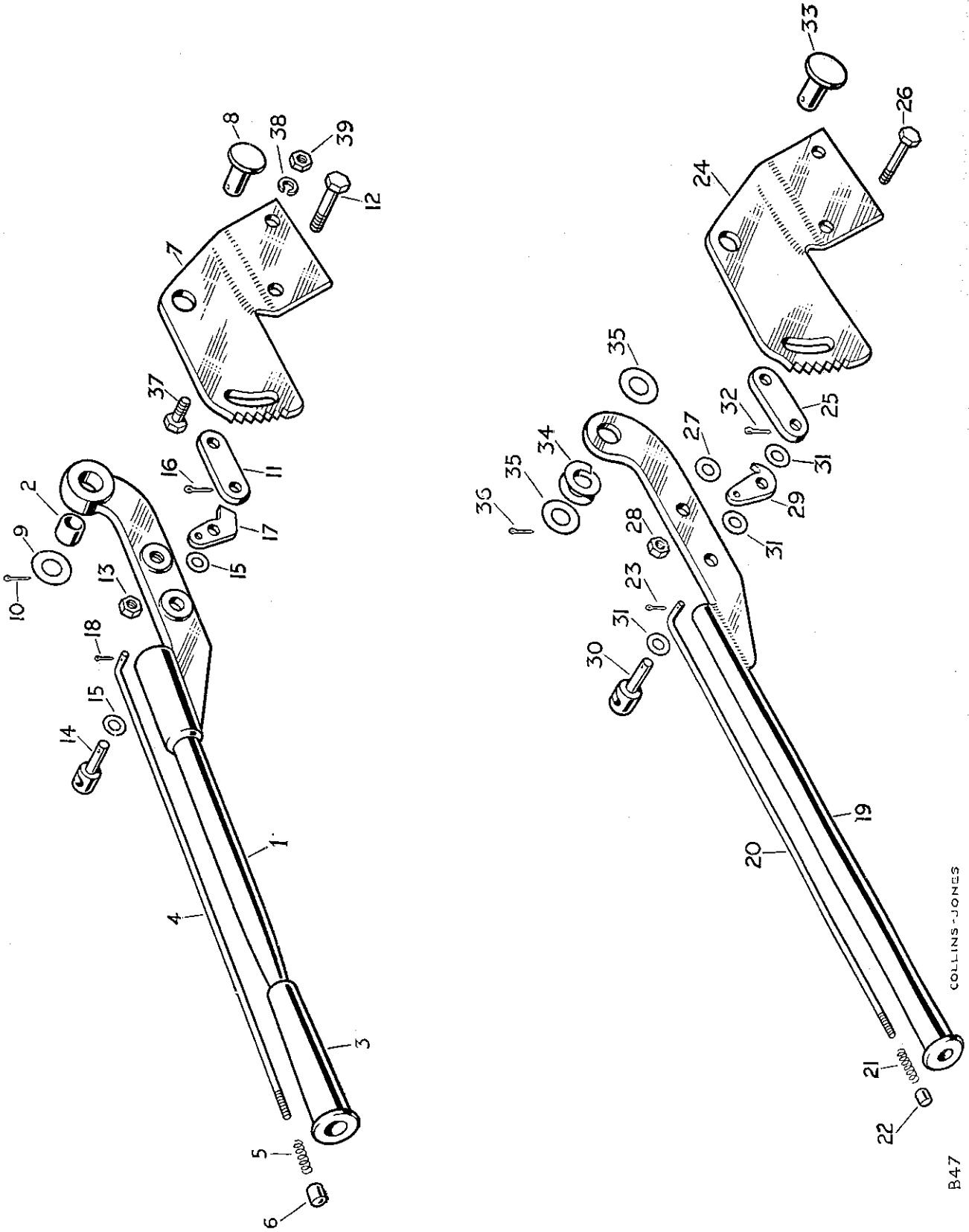

PLATE REF.
1
2
3
4
5
6
7
8
9
10
11
12
13
14
15
16
17
18
19
20
21
22
23
24
25
26
27
28
29
30
31
32
33
34
35
36
37
38
39

carsdatabase.com

HAND BRAKE LEVER, R.H.D.

PLATE REF.	1 2 3 4 DESCRIPTION	Qty.	Part No.	REMARKS
	HAND BRAKE LEVER ASSEMBLY	1	218379	
1	Hand brake lever and bush	1	218380	
2	Bush for fulcrum pin	1	01379	
3	Grip for hand brake	1	01387	
4	Plunger rod	1	218381	
5	Spring for rod	1	58702	
6	Plunger	1	01624	
7	Ratchet for hand brake	1	218382	
8	Fulcrum pin	1	01380	
9	Plain washer } Fixing ratchet to lever	1	2218	Vehicles numbered 860001 to 06105378, 8670001 to 06200120, 8680001 to 06300027
10	Split pin	1	2974	
11	Locating plate	1	01384	
12	Bolt ($\frac{3}{8}$″x1$\frac{5}{16}$″ long) } Fixing plate through quad-	1	250541	
13	Nut ($\frac{3}{8}$″) } rant to hand brake lever	1	2827	
14	Pin for hand brake adjuster on brake lever	1	219208	
15	Plain washer for pin	2	3833	
16	Split pin, adjuster pin to catch	1	2392	
17	Brake catch	1	50235	
18	Split pin, catch to plunger rod	1	2388	
	HAND BRAKE LEVER ASSEMBLY	1	242133	
19	Hand brake lever	1	231321	
20	Plunger rod	1	218381	
21	Spring for plunger rod	1	58702	
22	Plunger	1	231319	
23	Split pin fixing rod to catch	1	2388	
24	Ratchet for hand brake	1	218382	
25	Locating plate	1	01384	
26	Bolt ($\frac{3}{8}$″ x 1$\frac{1}{8}$″ long) } Fixing	1	215272	
27	Plain washer } locating plate and	1	2210	Vehicles numbered 06105379, 06200121 and 06300028 onwards
28	Nut ($\frac{3}{8}$″) } lever to ratchet	1	2827	
29	Brake catch	1	50235	
30	Pin	1	07164	
31	Plain washer } Fixing catch to lever	3	2210	
32	Split pin	1	2392	
33	Fulcrum pin for hand brake	1	231318	
34	Spring washer } Fixing	1	2290	
35	Plain washer } pin to ratchet	1	2218	
36	Split pin } and lever	1	2974	
37	Bolt ($\frac{3}{8}$″ x $\frac{29}{32}$″ long)	2	215270	
38	Spring washer } Fixing hand brake lever	2	3076	
39	Nut ($\frac{3}{8}$″)	2	2827	

cardiagn.com

HAND BRAKE LEVER, L.H.D.

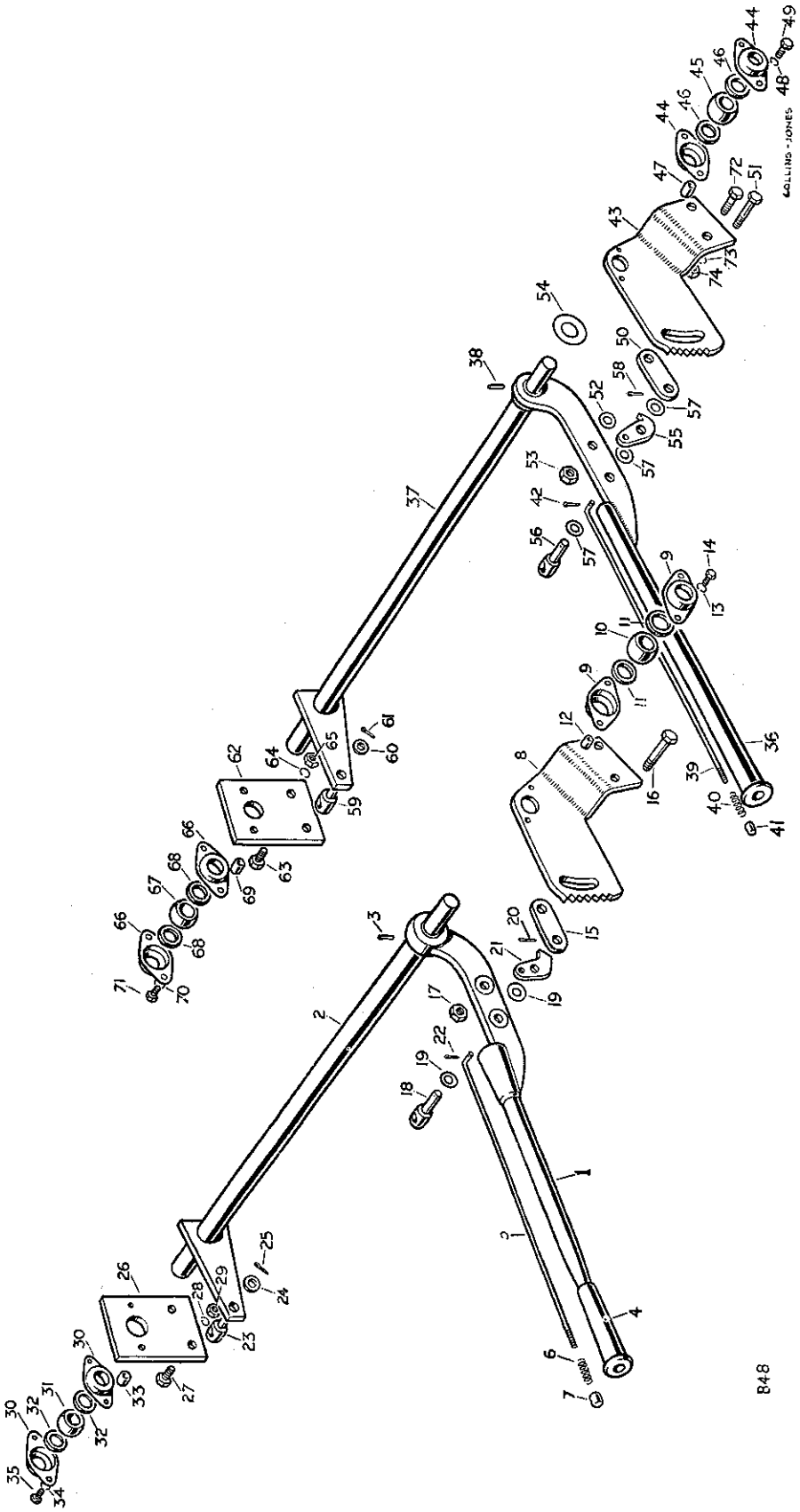

HAND BRAKE LEVER, L.H.D.

PLATE REF. 1 2 3 4	DESCRIPTION	Qty.	Part No.	REMARKS
	HAND BRAKE LEVER ASSEMBLY	1	218400	
	Hand brake lever and cross shaft	1	218403	
1	Hand brake lever	1	218383	
2	Hand brake cross shaft	1	218402	
3	Pin fixing lever to shaft	1	50472	
4	Grip for hand brake	1	01387	
5	Plunger rod	1	218381	
6	Spring for rod	1	58702	
7	Plunger	1	01624	
8	Ratchet for hand brake	1	218407	
9	Housing for cross shaft bearing	2	217983	
10	Spherical bearing for cross shaft	1	217984	
11	Felt ring for bearing	2	217985	
12	Distance piece } Fixing	2	218410	
13	Spring washer } housings to	2	3075	
14	Set bolt ($\frac{5}{16}$" x $\frac{29}{32}$" long) } ratchet	2	215163	
15	Locating plate	1	01384	
16	Bolt ($\frac{3}{8}$"x 1$\frac{5}{16}$" long) } Fixing plate through quad-	1	250541	
17	Nut ($\frac{3}{8}$") } rant to hand brake lever	1	2827	Vehicles numbered 860001 to 06111806, 8670001 to 06200325, 8680001 to 06300030
18	Pin for hand brake adjuster on brake lever	1	219208	
19	Plain washer for pin	2	3833	
20	Split pin, adjuster pin to catch	1	2392	
21	Brake catch	1	50235	
22	Split pin, catch to plunger rod	1	2388	
23	Pin for hand brake adjuster on cross shaft lever	1	218408	
24	Plain washer } Fixing pin to	1	2208	
25	Split pin } cross shaft lever	1	2392	
26	Support plate for hand brake bearing housing	1	218409	
27	Bolt ($\frac{3}{8}$" x $\frac{29}{32}$" long) } Fixing	2	215270	
28	Spring washer } support plate to	2	3076	
29	Nut ($\frac{3}{8}$") } chassis frame	2	2827	
30	Housing for cross shaft bearing	2	217983	
31	Spherical bearing for cross shaft	1	217984	
32	Felt ring for bearing	2	217985	
33	Distance piece } Fixing	2	218410	
34	Spring washer } housing to	2	3075	
35	Set bolt ($\frac{5}{16}$" x $\frac{29}{32}$" long) } support plate	2	215163	
	HAND BRAKE LEVER ASSEMBLY	1	242126	
	Hand brake lever and cross shaft	1	232171	
36	Hand brake lever	1	232165	
37	Cross shaft for hand brake	1	218402	
38	Pin fixing lever to shaft	1	50472	Vehicles numbered 06111807, 06200326 and 06300031 onwards
39	Plunger rod	1	218381	
40	Spring for plunger rod	1	58702	
41	Plunger	1	231319	
42	Split pin fixing rod to catch	1	2388	
43	Ratchet for hand brake	1	218407	

cardiagn.com

HAND BRAKE LEVER, L.H.D.

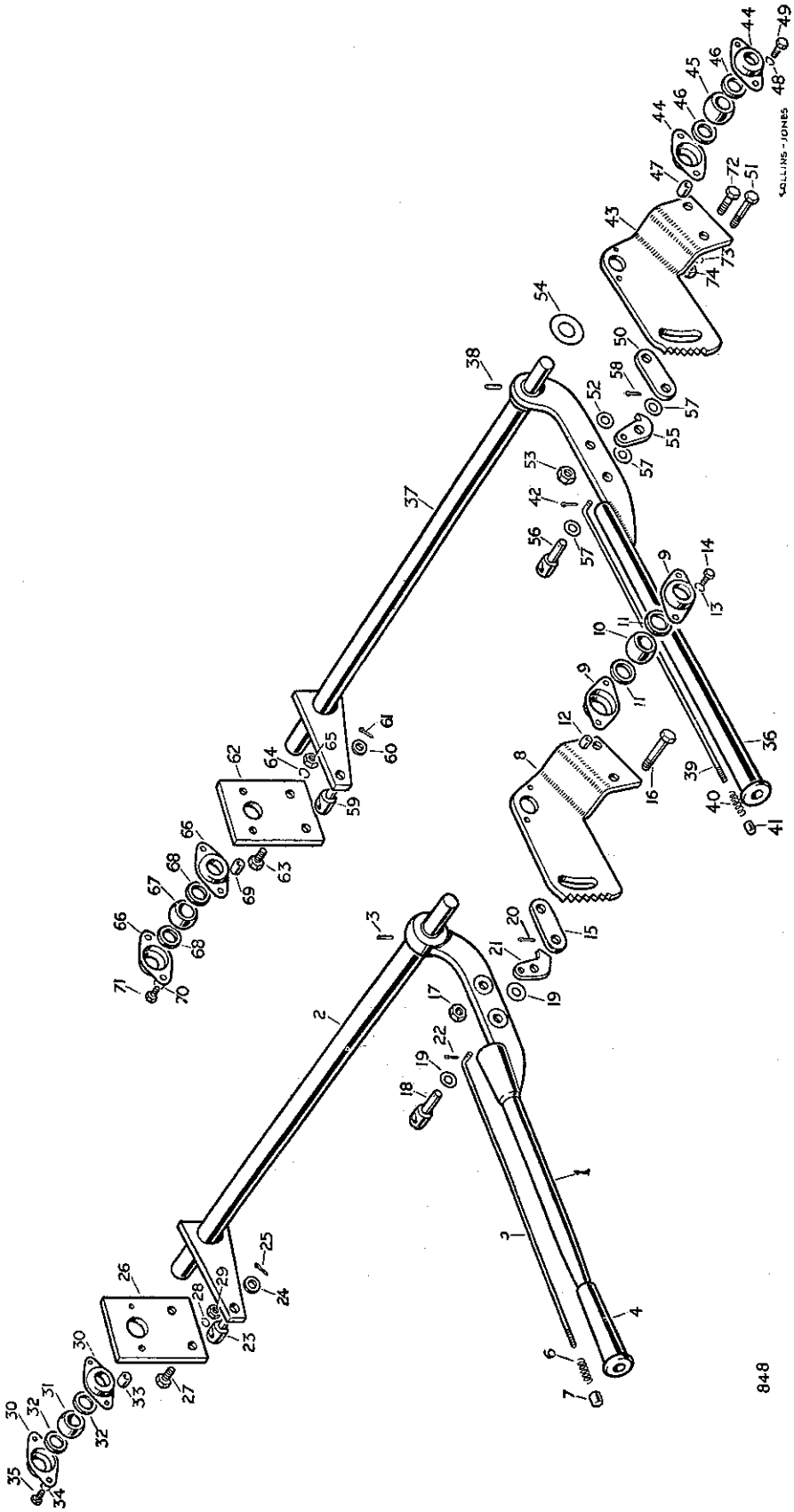

PLATE REF.
44
45
46
47
48
49
50
51
52
53
54
55
56
57
58
59
60
61
62
63
64
65
66
67
68
69
70
71
72
73
74

cardiagn.com

HAND BRAKE LEVER, L.H.D.

PLATE REF.	1 2 3 4 DESCRIPTION		Qty.	Part No.	REMARKS
44	Housing for cross shaft bearing		2	217983	Vehicles numbered 06111807, 06200326 and 06300031 onwards
45	Spherical bearing for cross shaft		1	217984	
46	Felt ring for bearing		2	217985	
47	Distance piece	Fixing bearing and housing to ratchet	2	218410	
48	Spring washer		2	3075	
49	Set bolt ($\frac{5}{16}''$ x $\frac{29}{32}''$ long)		2	215163	
50	Locating plate		1	01384	
51	Bolt ($\frac{3}{8}''$ x $1\frac{1}{8}''$)	Fixing locating plate and lever to ratchet	1	215272	
52	Plain washer		1	2210	
53	Nut ($\frac{3}{8}''$)		1	2827	
54	Plain washer between lever and ratchet		1	2218	
55	Brake catch		1	50235	
56	Pin	Fixing catch to lever	1	07164	
57	Plain washer		3	2210	
58	Split pin		1	2392	
59	Pin for hand brake adjuster rod		1	218408	
60	Plain washer	Fixing pin to cross shaft lever	1	2208	
61	Split pin		1	2392	
62	Support plate for hand brake bearing housing		1	218409	
63	Bolt ($\frac{3}{8}''$ x $\frac{29}{32}''$ long)	Fixing support plate to chassis frame	2	215270	
64	Spring washer		2	3076	
65	Nut ($\frac{3}{8}''$)		2	2827	
66	Housing for cross shaft bearing		2	217983	
67	Spherical bearing for cross shaft		1	217984	
68	Felt ring for bearing		2	217985	
69	Distance piece	Fixing housing and bearing to support plate	2	218410	
70	Spring washer		2	3075	
71	Set bolt ($\frac{5}{16}''$ x $\frac{29}{32}''$ long)		2	215163	
72	Bolt ($\frac{3}{8}''$ x $\frac{29}{32}''$ long)	Fixing hand brake lever	2	215270	
73	Spring washer		2	3076	
74	Nut ($\frac{3}{8}''$)		2	2827	

cardiagn.com

HAND BRAKE, TRANSMISSION

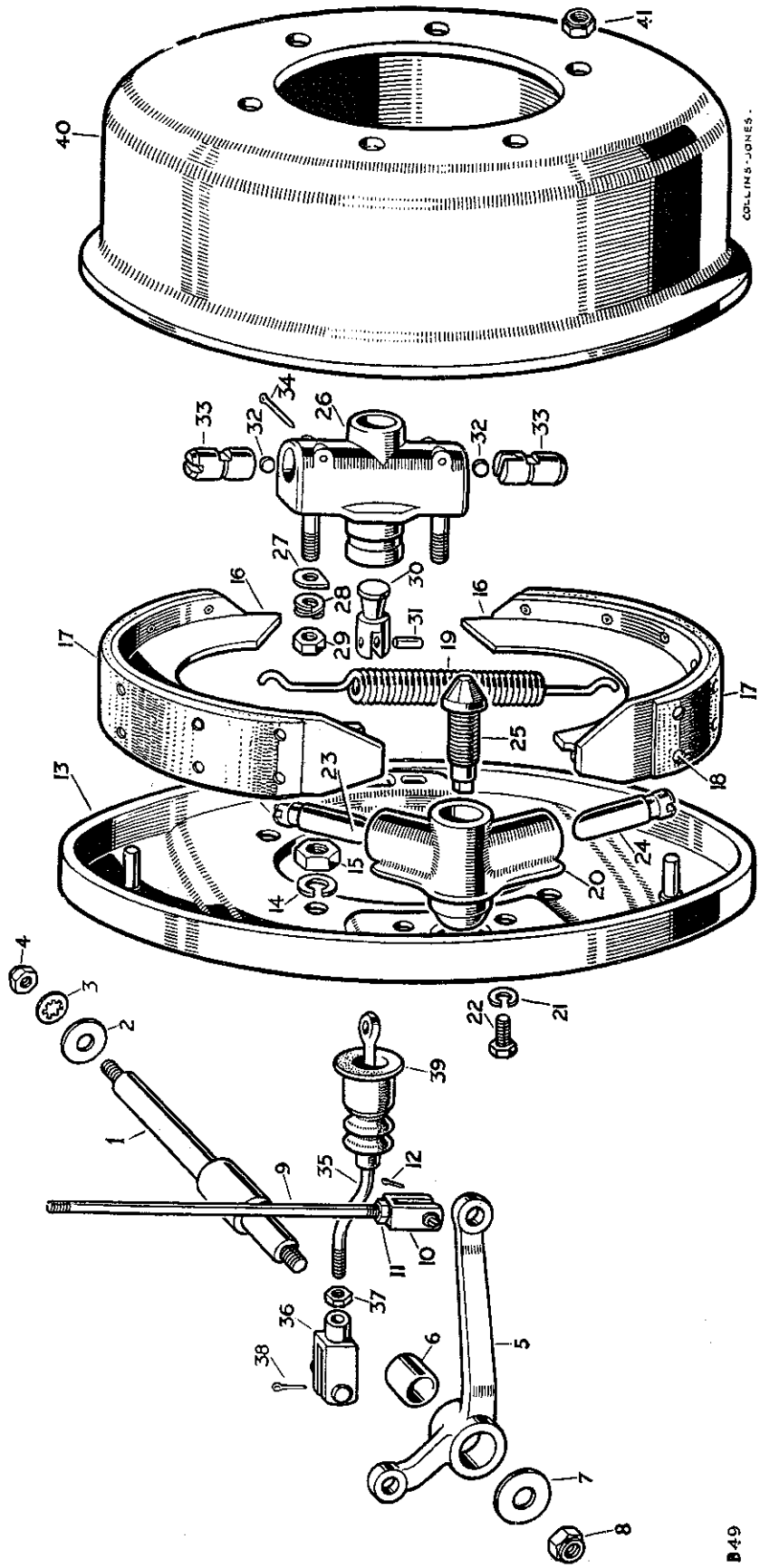

cardiagn.com

HAND BRAKE, TRANSMISSION

PLATE REF.	1 2 3 4 DESCRIPTION	Qty.	Part No.	REMARKS
1	Spindle for hand brake relay lever	1	218388	
2	Plain washer } Fixing	1	2441	
3	Shakeproof washer } spindle to	1	72001	
4	Nut ($\frac{7}{16}$") } chassis frame	1	2836	
5	RELAY LEVER ASSEMBLY FOR HAND BRAKE	1	218414	
6	Bush for relay lever	1	218386	
7	Plain washer } Fixing lever	1	2441	
8	Self-locking nut ($\frac{7}{16}$") } to spindle	1	251323	
9	Brake rod, relay to hand brake lever	1	218387	
10	Clevis complete } Fixing brake rod	1	215809	
11	Locknut ($\frac{5}{16}$") } to relay and	3	2828	
12	Split pin } hand brake lever	1	2392	
13	Anchor plate, transmission brake	1	219002	
14	Spring washer } Fixing anchor plate to	4	3076	
15	Nut ($\frac{3}{8}$") } speedometer housing	4	2827	
16	BRAKE SHOE ASSEMBLY, BOXED PAIR	1	264374	
17	Lining for shoe	2	219007	
18	Rivet for lining	20	242467	
19	Pull-off spring for brake shoe	2	219023	
20	Adjuster housing	1	219010	
21	Spring washer } Fixing adjuster	2	219025	
22	Set bolt } housing	2	219024	
23	Plunger R.H.	1	219011	
24	Plunger L.H.	1	219012	
25	Adjuster cone	1	219013	
26	Expander housing	1	230741	
27	Special washer }	2	219022	
28	Spring washer } Fixing expander housing	2	219027	
29	Simmonds nut }	2	273080	
30	Expander cone	1	219021	
31	Pin fixing cone to brake rod	1	219017	
32	Roller for expander	2	219018	
33	Plunger for expander	2	219019	
34	Split pin fixing plunger	2	219020	
35	Brake rod, expander to relay lever	1	218391	
36	Clevis complete } Fixing	1	215809	
37	Locknut ($\frac{5}{16}$") } brake rod to	1	2828	
38	Split pin } relay lever	1	2392	
39	Dust cover for brake rod	1	219028	
40	Brake drum	1	217536	
41	Self-locking nut ($\frac{5}{16}$") fixing brake drum	6	50525	

cardiagn.com

CHASSIS FRAME, ROAD SPRINGS AND SHOCK ABSORBERS

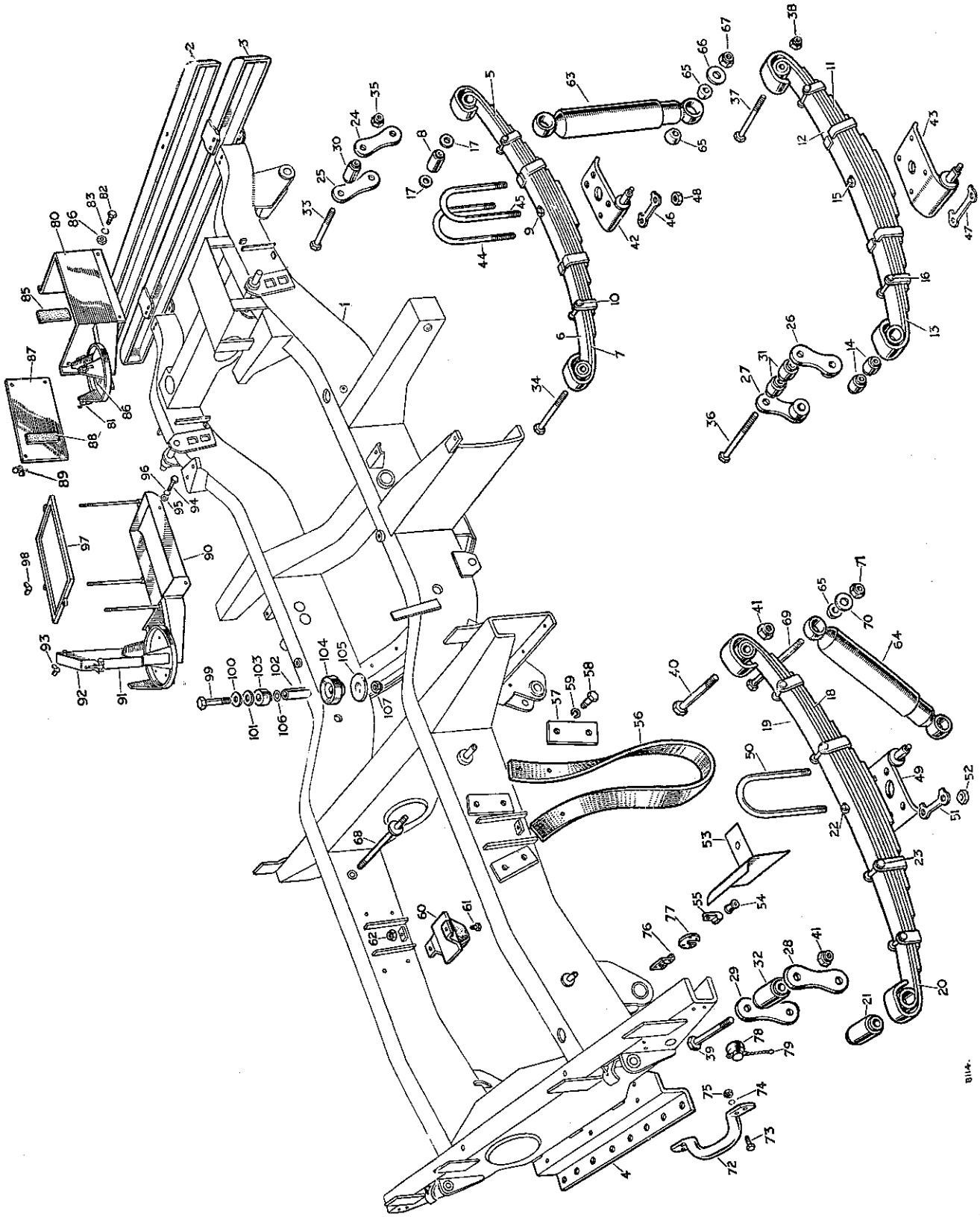

cardiagn.com

CHASSIS FRAME, ROAD SPRINGS AND SHOCK ABSORBERS

PLATE REF.	1 2 3 4	DESCRIPTION	Qty.	Part No.	REMARKS
		Chassis frame complete	1	233181**†††	
1		Chassis frame complete	1	236805††	
2		Front bumper	1	218485	
		Bolt (3/8" x 23/32" long) — Fixing front bumper to chassis frame	8	215269	Vehicles numbered 860001 to 06103840, 8670001 to 06200091, 8680001 to 06300021
		Plain washer	8	2219	
		Self-locking nut (3/8")	8	50526	
3		Front bumper	1	270522	
		Bolt (3/8" x 4" long) — Fixing front bumper to chassis frame	4	237194	
		Plain washer	8	3822	
		Self-locking nut (3/8")	4	251322	
4		Rear draw bar	1	232625	
		Set bolt (3/8" x 23/32" long) — Fixing bar to tapped plate	3	215269	Vehicles numbered 06103841 onwards
		Spring washer — Alternative	3	3076	06200092 onwards
		Locking plate — Alternative	3	235731	06300022 onwards
		Bolt (3/8" x 1" long — Fixing bar to chassis cross-member	4	250539	
		Plain washer, small	11	2219	
		Plain washer, large	4	3040	
		Spring washer — Alternative	4	3076	
		Locking plate — Alternative	8	235730	
		Nut (3/8")	4	2827	
		Road spring complete, front, 1 3/4" wide	2	217222	Vehicles numbered 860001 to 862114
5		Road spring complete, front, 1 3/4" wide	2	231196 †	
6		Main leaf — For front spring	2	261429	
7		2nd leaf	2	261624	
		3rd leaf	2	262391	
		4th leaf	2	262392	
		5th leaf	2	262393	
		6th leaf	2	262394	
		7th leaf	2	262395	Vehicles numbered 860001 to 06113529, 8670001 to 06200409, 8680001 to 06300030
		8th leaf	2	262396	
		9th leaf	2	262397	
8		Bush for front spring	4	230713	
9		Dowel for front spring	2	238799	
10		Bolt (1/4" x 2 9/16" long) — For spring clip	4	215072	
		Nut (1/4")	4	2823	
11		Road spring complete, front, 2 1/2" wide	2	233574	
12		Main leaf — For front spring	2	262065	
13		2nd leaf	2	262066	Vehicles numbered 06113530 onwards
		3rd leaf	2	262398	06200410 onwards
		4th leaf	2	262399	06300031 onwards

** Includes Front bumper, rear draw bar and fittings, and shock absorbers and exhaust pipe fixings.

† Vehicles numbered 862115 to 06113529
8670001 to 06200409
8680001 to 06300030

†† Vehicles numbered 06113530, 06200410 and 06300031 onwards

††† Vehicles numbered 860001 to 06113529
8670001 to 06200409
8680001 to 06300030

cardiagn.com

CHASSIS FRAME, ROAD SPRINGS AND SHOCK ABSORBERS

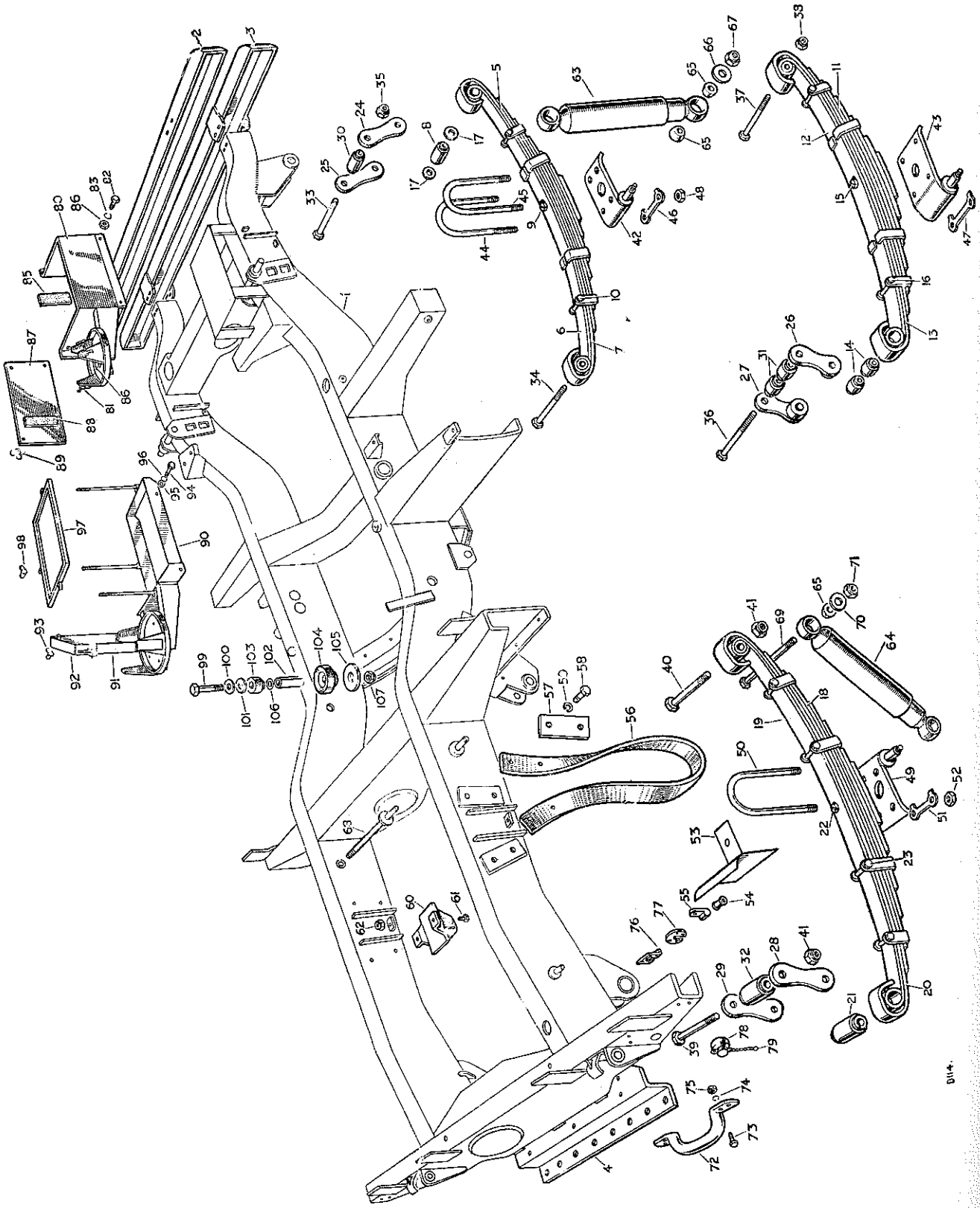

CHASSIS FRAME, ROAD SPRINGS AND SHOCK ABSORBERS

PLATE REF. 1 2 3 4	DESCRIPTION	Qty.	Part No.	REMARKS
	5th leaf (For front spring)	2	262400	Vehicles numbered 06113530 onwards
	6th leaf (For front spring)	2	262401	
	7th leaf (For front spring)	2	262402	
	8th leaf (For front spring)	2	262403	
	9th leaf (For front spring)	2	262404	
14	Bush for front spring	4	233573	06200410 onwards
15	Dowel for front spring	2	240255	06300031 onwards
	Special bolt and nut for spring clip	4	262341	
	Washer .090″ (For bush on front springs)	As required	230743	Vehicles numbered 860001 to 8665464
17	Washer .100″ (For bush on front springs)	As required	230709	
	Washer .110″ (For bush on front springs)	As required	230710	
	Washer .120″ (For bush on front springs)	As required	230711	
	Road spring complete, rear passenger's	1	217224	
18	Road spring complete, rear driver's	1	231224	
19	Main leaf (For rear spring)	2	261430	
20	2nd leaf (For rear spring)	2	261625	
	3rd leaf (For rear spring)	2	262405	
	4th leaf (For rear spring)	2	262406	
	5th leaf (For rear spring)	2	262407	
	6th leaf (For rear spring)	2	262408	
	7th leaf (For rear spring)	2	262409	
	8th leaf (For rear spring)	2	262410	
	9th leaf (For rear spring)	2	262411	
21	Bush for rear spring	4	210604	
22	Dowel for rear spring	2	238799	
23	Bolt ($\frac{1}{4}$″ x $2\frac{9}{16}$″ long) (For spring clip)	8	215072	
	Nut ($\frac{1}{4}$″) (For spring clip)	8	2823	
24	Shackle plate, tapped (For front springs)	2	230689	*
25	Shackle plate, plain (For front springs)	2	230690	*
26	Shackle plate, tapped (For front springs)	2	233630	†
27	Shackle plate, plain (For front springs)	2	233629	†
28	Shackle plate, tapped (For rear springs)	2	58192	
29	Shackle plate, plain (For rear springs)	2	210691	
30	Bush in chassis frame, front spring	2	230713	*
31	Bush in chassis frame, front spring	4	263354	†
32	Bush in chassis frame, rear	2	210604	
33	Shackle pin (Fixing springs and shackles)	12	210699	Vehicles numbered 860001 to 860647
	Shackle pin (Fixing springs and shackles)	8	210699	Vehicles numbered 860648 to 06113529, 8670001 to 06200409, 8680001 to 06300030
34	Shackle pin, springs to frame (Fixing springs and shackles)	4	230721	
35	Self-locking nut ($\frac{1}{2}$″) (Fixing springs and shackles)	12	50528	*
36	Shackle pin, front	4	233625	†
37	Shackle pin, springs to frame, front	2	270741	†
38	Self-locking nut ($\frac{1}{2}$″), front	6	251324	†
39	Shackle pin, rear	4	210699	†
40	Shackle pin, springs to frame, rear	2	230721	†
41	Self-locking nut ($\frac{1}{2}$″), rear	6	50528	†
	Bottom plate for front spring, L.H.	1	217247	*
42	Bottom plate for front spring, R.H.	1	217249	*
	Bottom plate for front spring, L.H.	1	233640	†
43	Bottom plate for front spring, R.H.	1	233642	†

* Vehicles numbered 860001 to 06113529
8670001 to 06200409
8680001 to 06300030

† Vehicles numbered 06113530 onwards
06200410 onwards
06300031 onwards

cardiagn.com

CHASSIS FRAME, ROAD SPRINGS AND SHOCK ABSORBERS

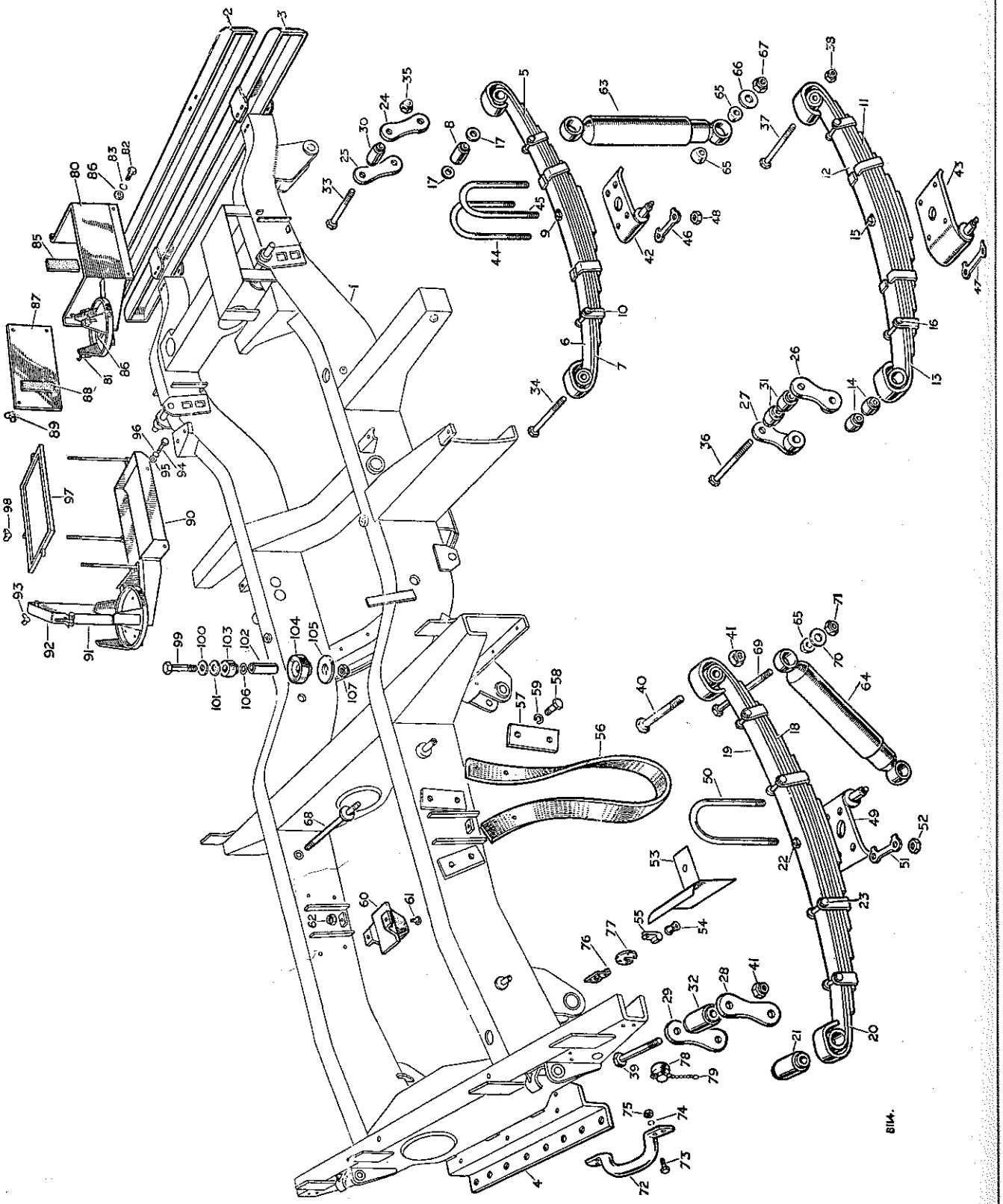

PLAT REF
44
45
46
47
48
49
50
51
52
53
54
55
56
57
58
59
60
61
62
63
64
65
66
67
68
69
70
71
72
73
74
75

carpdiagram.com

CHASSIS FRAME, ROAD SPRINGS AND SHOCK ABSORBERS

PLATE REF.	1 2 3 4 DESCRIPTION	Qty.	Part No.	REMARKS
44	"U" bolt, long } Fixing springs to axle	1	217259	
45	"U" bolt, short } Fixing springs to axle	1	06694	
	"U" bolt } Fixing springs to axle	2	03459	
46	Locker } Fixing springs to axle	4	217261	†
47	Locker } Fixing springs to axle	4	234734	***
48	Nut ($\frac{7}{16}$") } Fixing springs to axle	8	2096	
	Bottom plate for rear spring, L.H.	1	217253	
49	Bottom plate for rear spring, R.H.	1	217254	
50	"U" bolt } Fixing rear springs to axle	4	06694	
51	Locker } Fixing rear springs to axle	4	217261	
52	Nut ($\frac{7}{16}$") } Fixing rear springs to axle	8	2096	
	Shield for brake pipe, L.H.	1	232089	
53	Shield for brake pipe, R.H.	1	232088	
54	Rubber grommet for brake pipe	2	06860	
55	Clip for grommet	2	56666	
	Bolt (2 B.A. x $\frac{7}{16}$" long) } Fixing clip to shield	2	234603	
	Spring washer } Fixing clip to shield	2	3073	
	Nut (2 B.A.) } Fixing clip to shield	2	2247	
56	Check strap for rear axle	2	219573	
57	Plate for check strap	4	219574	
58	Set bolt ($\frac{3}{8}$" x $\frac{29}{32}$" long) } Fixing check strap to chassis frame	8	215270	
59	Spring washer } Fixing check strap to chassis frame	8	3076	
60	Rubber buffer for axle, rear	2	219583	
	Rubber buffer for axle, front	2	239718	
61	Bolt ($\frac{1}{4}$" x $\frac{5}{8}$" long) } Fixing buffers to chassis frame	8	215053	
62	Self-locking nut ($\frac{1}{4}$") } Fixing buffers to chassis frame	8	50524	
63	Shock absorber, front	2	217265	Vehicles numbered 860001 to 862114
	Shock absorber, front	2	241037	Vehicles numbered 862115 onwards
64	Shock absorber, rear	2	241038	
65	Rubber bush } Fixing shock absorbers	16	240796	
66	Plain washer } Fixing shock absorbers	8	217245	**
67	Self-locking nut ($\frac{7}{16}$") } Fixing shock absorbers	8	50527	**
68	Special pin for L.H. shock absorber and tail pipe	1	231784	††
69	Bolt ($\frac{7}{16}$" x $6\frac{5}{32}$" long) } Fixing shock absorbers	3	215430	††
70	Plain washer } Fixing shock absorbers	8	217245	††
71	Self-locking nut ($\frac{7}{16}$") } Fixing shock absorbers	8	251323	††
	Special stud for tail pipe mounting	2	236850	Supplied with 236805
72	Lifting handle, rear	2	300816	
73	Bolt ($\frac{5}{16}$" x $\frac{11}{16}$" long) } Fixing handle to chassis frame	8	237158	
74	Spring washer } Fixing handle to chassis frame	8	3075	
75	Nut ($\frac{5}{16}$") } Fixing handle to chassis frame	8	3490	

† Vehicles numbered 860001 to 06113529
8670001 to 06200409
8680001 to 06300030

†† Vehicles numbered 06100156 onwards
06200010 onwards
06300001 onwards

*** Vehicles numbered 06113530 onwards
06200410 onwards
06300031 onwards

** Vehicles numbered 860001 to 06100155
8670001 to 06200009
8680001 to 8688000

cardiagn.com

CHASSIS FRAME, ROAD SPRINGS AND SHOCK ABSORBERS

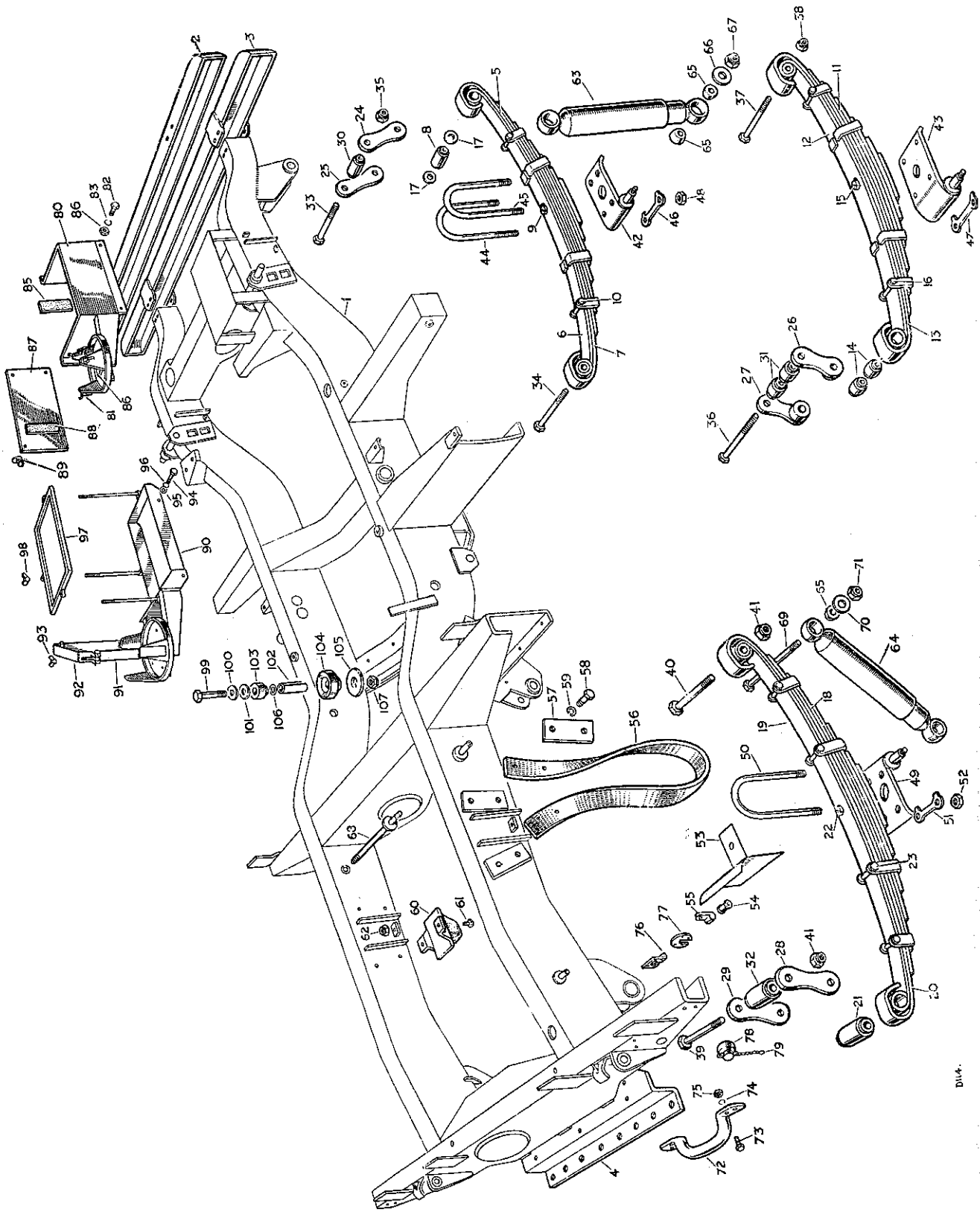

CHASSIS FRAME, ROAD SPRINGS AND SHOCK ABSORBERS

PLATE REF.	1 2 3 4 DESCRIPTION		Qty.	Part No.	REMARKS
76	Bracket for trailer plug		1	219575	Vehicles numbered 860001 to 8666067
	Bolt (2 B.A. x ½″ long)	Fixing bracket to chassis frame	2	234603	
	Spring washer		2	3073	
	Nut (2 B.A.)		2	2247	
77	Retainer plate for trailer plug		1	231952	
	Screw (5 B.A.)	Fixing plate and plug to chassis frame	4	3279	
	Nut (5 B.A.)		4	3280	
78	Splashproof cap for trailer plug		1	231772	
79	Retaining chain for cap		1	231995	Vehicles numbered 8666068 onwards
	Screw (2 B.A. x ½″ long)	Fixing chain to chassis frame	1	77700	
	Plain washer		1	3851	
	Spring washer		1	3073	
	Nut (2 B.A.)		1	3823	
80	Battery casing and air cleaner support		1	218036	
81	Toggle clip for air cleaner support		3	218056	
82	Bolt (¼″ x ⅝″ long)	Fixing casing and support to chassis frame	3	215053	
	Bolt (¼″ x ¾″ long)		1	215054	
	Plain washer		1	2213	
83	Spring washer		4	3074	Vehicles numbered:
84	Nut (¼″)		4	2823	860001 to 16100602, 16131572 and 16160908
85	Sponge rubber strip for casing		2	77630	8670001 to 16230080 and 16260020
86	Sponge rubber pad for air cleaner		1	219640	8680001 to 16300002, 16330001 and 16360006
87	Side plate for battery casing		1	218037	16630001 to 16630024
88	Sponge rubber strip for side plate		2	77630	16660001 to 16660786
89	Wing nut fixing side plate		4	3580	
90	Battery casing and air cleaner support complete		1	232550	
91	Air cleaner clamp, side		1	232539	
92	Air cleaner clamp, top		1	232548	
93	Wing nut for clamp		1	3580	
94	Bolt (¼″ x ⅝″ long)	Fixing battery casing and support to chassis frame	1	218552	Vehicles numbered 16100603, 16131573, 16160909, 16200001, 16230081, 16260021, 16300003, 16330002, 16360007, 16630025 and 16660787 onwards
	Bolt (¼″ x 9/16″ long)		3	215756	
95	Shakeproof washer		2	78114	
96	Spring washer		3	3074	
	Nut (¼″)		4	3819	
97	Battery support, top		1	232682	
98	Wing nut fixing battery		3	250431	
	Set bolt (7/16″ x 2 15/16″ long), front	Fixing engine unit to chassis frame at front and rear	2	215452	
	Spring washer, front		2	3077	
99	Special bolt		2	239656	
100	Plain washer, top		4	04799	
101	Rubber washer		4	50052	
102	Distance tube		4	04802	
103	Top rubber		4	07091	
104	Bottom rubber		4	04788	
105	Plain washer, bottom		4	04801	
106	Shim		As required	04800	
107	Self-locking nut (7/16″) rear		2	251323	

cardiagn.com

CHASSIS FRAME, ROAD SPRINGS AND SHOCK ABSORBERS

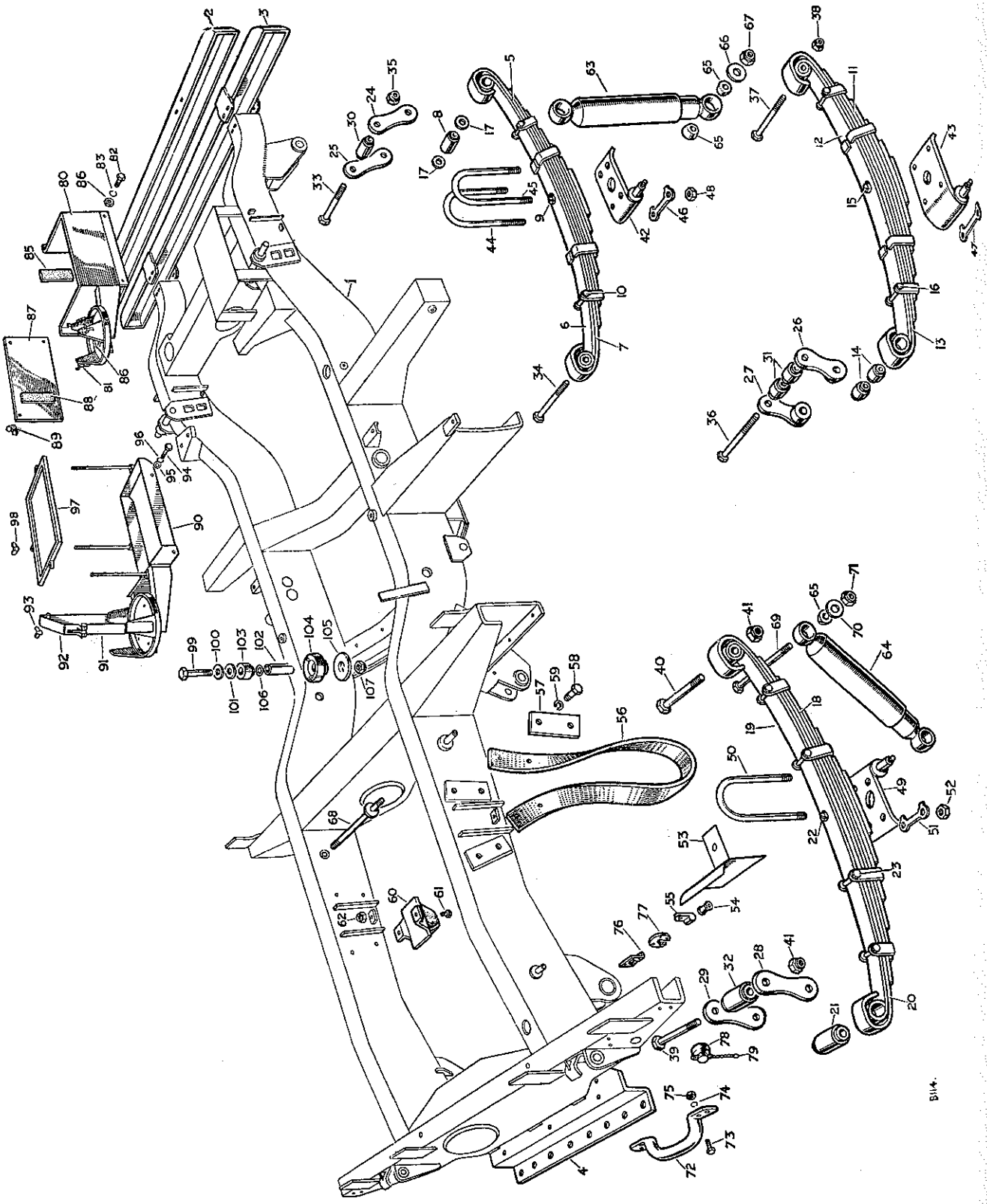

cardiagn.com

CHASSIS FRAME, ROAD SPRINGS AND SHOCK ABSORBERS

PLATE REF. 1 2 3 4	DESCRIPTION	Qty.	Part No.	REMARKS
	Road wheel, well base rim type	5	231601	Alternative types Check carefully before ordering
	Road wheel detachable rim type	5	217267	
	Special bolt and nut for detachable rim type wheel	8	243471	
	Tyre 6.00″ x 16″ Dunlop	5	239742	
	Tyre 7.00″ x 16″ Dunlop	5	232123	
	Inner tube 6.00″ x 16″ Dunlop	5	232122	
	Inner tube 7.00″ x 16″ Dunlop	5	233042	
	Tyre 7.00″ x 16″ Dunlop Standard	5	236615	Alternative to "Fort"
	Tyre 7.00″ x 16″ Dunlop "Fort"	5	233041	Supplied as extra equipment for desert conditions
	Inner tube 7.00″ x 16″ Dunlop "Fort"	5	233042	
	Rim band, for detachable rim type wheel	5	232053	
	Balance weight for road wheel — For well base rim type road wheel	As required	263142	
	Bolt ($\frac{1}{4}$″ x $\frac{3}{8}$″ long) fixing balance weight — For well base rim type road wheel	As required	77808	
	Nut for road wheel	20	217361	

cardiagn.com

CLUTCH PEDAL AND LINKAGE

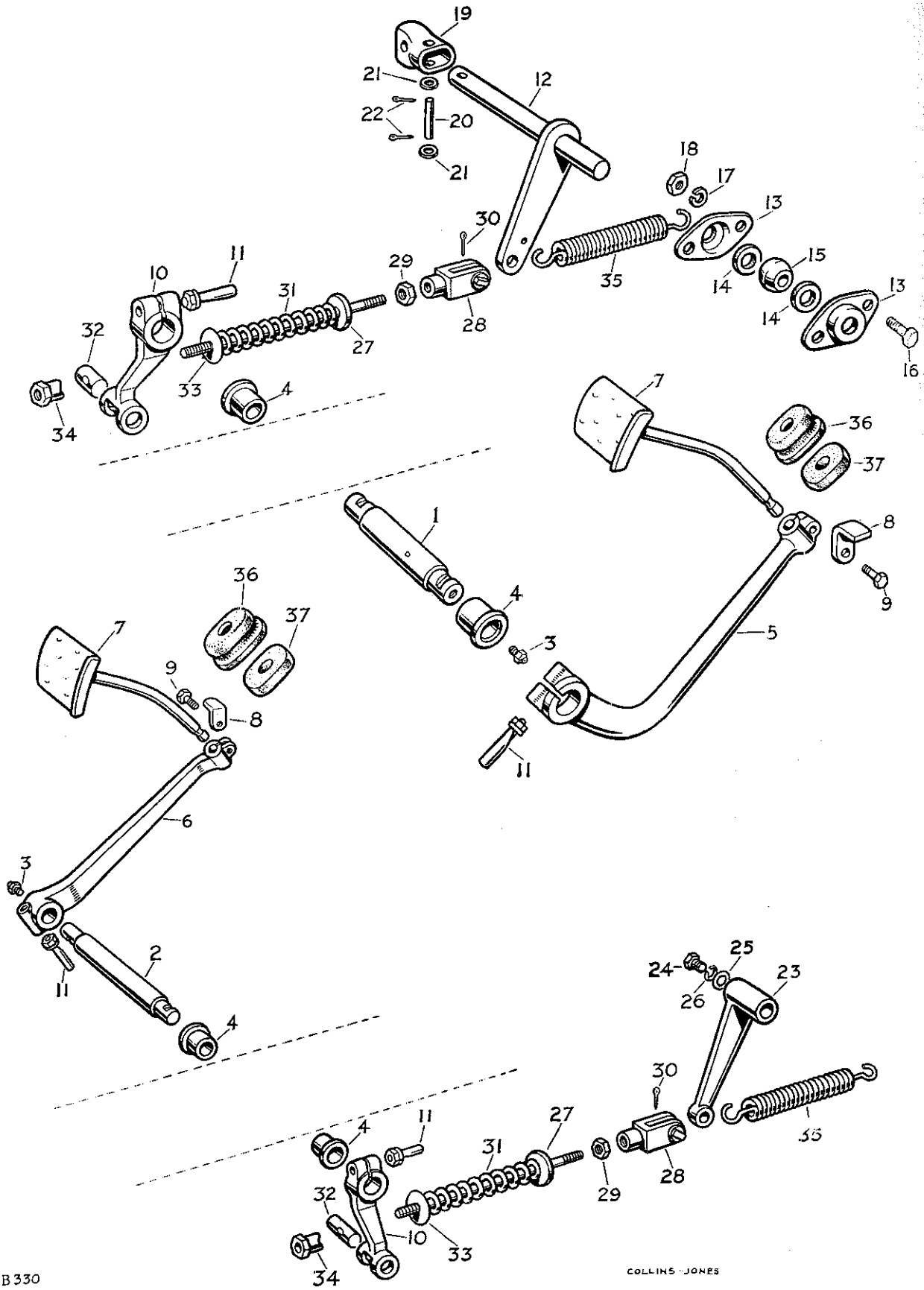

B 330

COLLINS-JONES

PLATE REF.
1
2
3
4
5
6
7
8
9
10
11
12
13
14
15
16
17
18
19
20
21
22
23
24
25
26
27
28
29
30
31
32
33
34
35
36
37

carsdiagram

CLUTCH PEDAL AND LINKAGE

PLATE REF.	1 2 3 4	DESCRIPTION	Qty.	Part No.	REMARKS
1		Shaft for clutch pedal	1	217829	R.H.D.
2		Shaft for clutch pedal	1	218025	L.H.D.
3		Grease nipple for shaft	1	218073	
4		Bush for pedal shaft	2	218014	
5		Pedal lever for clutch	1	217817	R.H.D.
6		Pedal lever for clutch	1	218026	L.H.D.
7		Clutch pedal rod and pad	1	218072	
8		Stop for clutch pedal	1	219213	
9		Set bolt ($\frac{5}{16}$" x 1" long) fixing rod and stop to lever	1	237160	
10		Operating lever for clutch	1	217828	
11		Cotter complete fixing levers	2	41508	
12		Cross-shaft and lever for clutch	1	217982	R.H.D.
13		Housing for cross-shaft bearing	2	217983	R.H.D.
14		Felt ring for bearing housing	2	217985	R.H.D.
15		Spherical bearing for cross-shaft	1	217984	R.H.D.
16		Bolt ($\frac{5}{16}$" x $\frac{5}{8}$" long) Fixing	2	237158	R.H.D.
17		Spring washer bearing housing	2	3075	R.H.D.
18		Nut ($\frac{5}{16}$") to chassis frame	2	2828	R.H.D.
19		Connecting tube for clutch cross-shaft	1	217979	R.H.D.
20		Pin Fixing connecting tube	2	240191	R.H.D.
21		Plain washer to cross-shaft and	4	10882	R.H.D.
22		Split pin clutch shaft	4	3359	R.H.D.
23		Operating lever for clutch shaft	1	237037	L.H.D.
24		Set bolt ($\frac{5}{16}$" x 1$\frac{3}{16}$" long) Fixing	1	237327	L.H.D.
25		Plain washer lever to	1	3522	L.H.D.
26		Spring washer clutch shaft	1	3075	L.H.D.
27		Operating rod for clutch	1	217986	
28		Clevis complete Fixing	1	215809	
29		Locknut ($\frac{5}{16}$") rod to cross-	1	2828	
30		Split pin shaft lever	1	2392	
31		Spring	1	2358	
32		Trunnion Fixing rod to	1	217988	
33		Plain washer operating lever	1	2223	
34		Adjusting nut	1	231574	
35		Return spring for clutch	1	218051	
36		Rubber grommet For clutch	1	70620	
37		Felt washer pedal rod	1	70621	

cardiagn.com

ACCELERATOR LEVER AND RODS

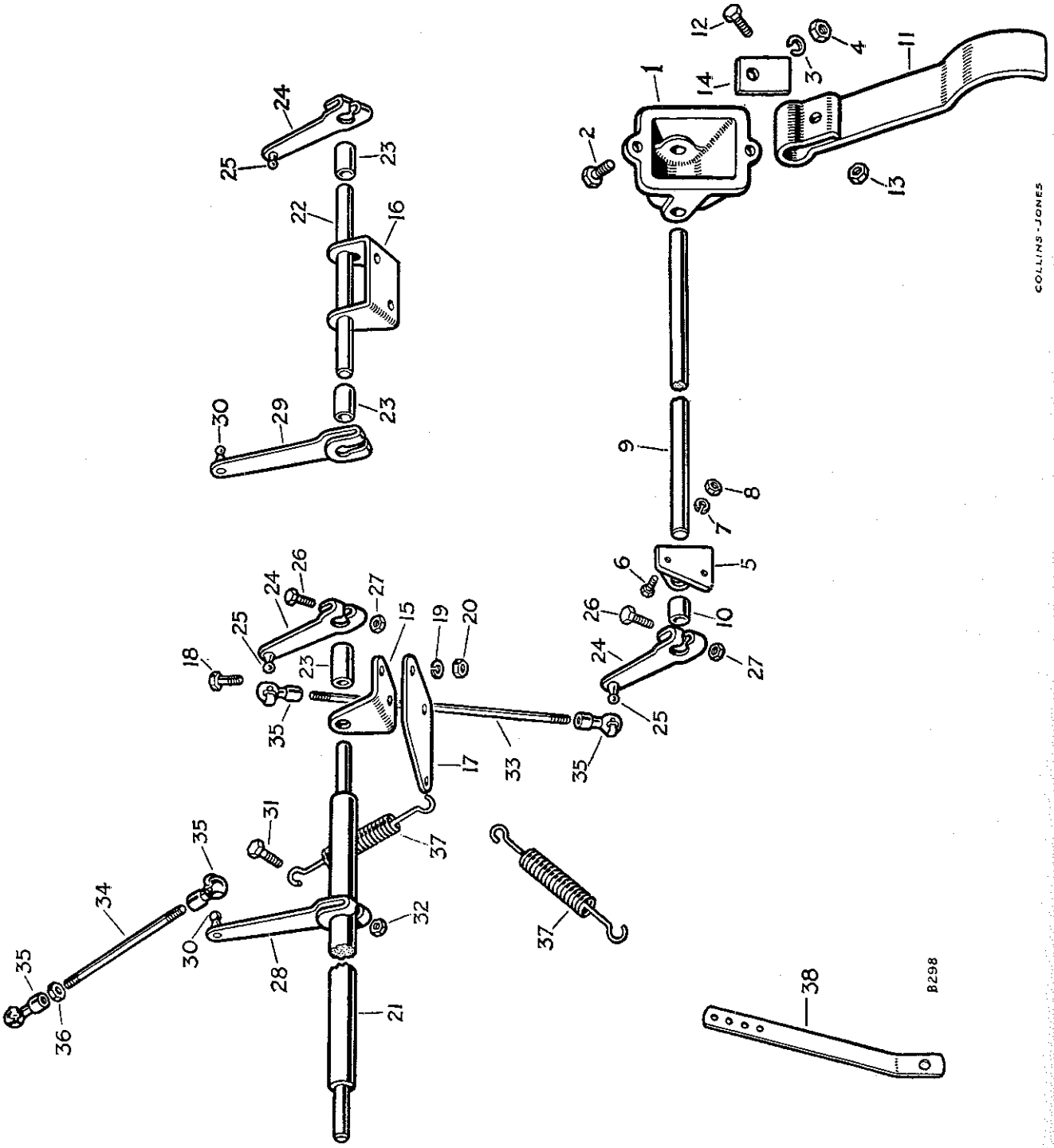

ACCELERATOR LEVER AND RODS

PLATE REF.	1 2 3 4 DESCRIPTION	Qty.	Part No.	REMARKS
1	Housing for accelerator pedal shaft	1	218294	
2	Bolt ($\frac{1}{4}$" x $\frac{5}{8}$" long) } Fixing housing to dash	1	215053	
	Bolt ($\frac{1}{4}$" x $\frac{3}{4}$" long) } Fixing housing to dash	1	215054	
3	Spring washer } Fixing housing to dash	2	3074	
4	Nut ($\frac{1}{4}$") } Fixing housing to dash	2	2823	
5	Bracket for accelerator pedal shaft	1	218372	R.H.D.
6	Bolt ($\frac{1}{4}$" x $\frac{5}{8}$" long) } Fixing bracket to dash	2	215053	R.H.D.
7	Spring washer } Fixing bracket to dash	2	3074	R.H.D.
8	Nut ($\frac{1}{4}$") } Fixing bracket to dash	2	2823	R.H.D.
9	Shaft for accelerator pedal	1	218374	R.H.D.*
	Shaft for accelerator pedal	1	234636	R.H.D.†
	Shaft for accelerator pedal	1	218375	L.H.D.*
	Shaft for accelerator pedal	1	234630	L.H.D.†
10	Distance piece for pedal shaft	1	234635	†
11	Accelerator pedal	1	218398	
12	Bolt ($\frac{5}{16}$" x $\frac{29}{32}$" long) } Fixing pedal to shaft	1	215163	
13	Nut ($\frac{5}{16}$") } Fixing pedal to shaft	1	2828	
14	Stop for accelerator pedal	1	231175	
15	Bracket for accelerator cross-shaft	2	218372	*
16	Bracket for accelerator shaft	1	234633	R.H.D.†
	Bracket for accelerator shaft	2	218372	L.H.D.†
17	Anchor for throttle return spring	1	231557	
18	Bolt ($\frac{1}{4}$" x $\frac{5}{8}$" long) } Fixing brackets and anchor to dash	4	215053	2 off on R.H.D. from vehicles numbered †
19	Spring washer } Fixing brackets and anchor to dash	4	3074	2 off on R.H.D. from vehicles numbered †
20	Nut ($\frac{1}{4}$") } Fixing brackets and anchor to dash	4	2823	2 off on R.H.D. from vehicles numbered †
21	Cross-shaft for accelerator	1	219061	*
22	Cross-shaft for accelerator	1	234632	R.H.D.†
	Cross-shaft for accelerator	1	234628	L.H.D.†
23	Distance piece for cross-shaft	1	230204	R.H.D. 2 off from vehicles numbered †
	Distance piece, long } For cross-shaft	1	234634	L.H.D.†
	Distance piece, short } For cross-shaft	1	234635	L.H.D.†
24	LEVER ASSEMBLY FOR ACCELERATOR	2	218378	
25	Ball end for lever	2	1481	
26	Bolt ($\frac{1}{4}$" x 1$\frac{5}{32}$" long) } Fixing levers to shaft	2	237144	
27	Nut ($\frac{1}{4}$") } Fixing levers to shaft	2	2823	
28	LEVER ASSEMBLY FOR CROSS-SHAFT	1	219482	*
29	LEVER ASSEMBLY FOR CROSS-SHAFT	1	248091	†
30	Ball end for lever	1	1481	
31	Bolt ($\frac{1}{4}$" x 1$\frac{1}{2}$" long) } Fixing lever to cross-shaft	1	250517	*
	Bolt ($\frac{1}{4}$" x 1$\frac{5}{32}$" long) } Fixing lever to cross-shaft	1	237144	†
32	Nut ($\frac{1}{4}$") } Fixing lever to cross-shaft	1	2823	
33	Control rod, accelerator to cross-shaft	1	218392	
34	Control rod, cross-shaft to engine	1	219509	
35	Ball joint socket for rods	4	1659	
36	Locknut for socket	4	2247	
37	Return spring for throttle	2	235649	1 off when Engine Governor is fitted
38	Anchor for spring on flywheel housing	1	231573	

* Vehicles numbered 860001 to 16102848, 16134921, 16162140, 16230080, 16260020, 16300003, 16330006, 16360008, 16630078 and 16661896

† Vehicles numbered 16102849, 16134922, 16162141, 16200001, 16230081, 16260021, 16300004, 16330007, 16360009, 16630079 and 16661897

cardiagn.com

EXHAUST SYSTEM

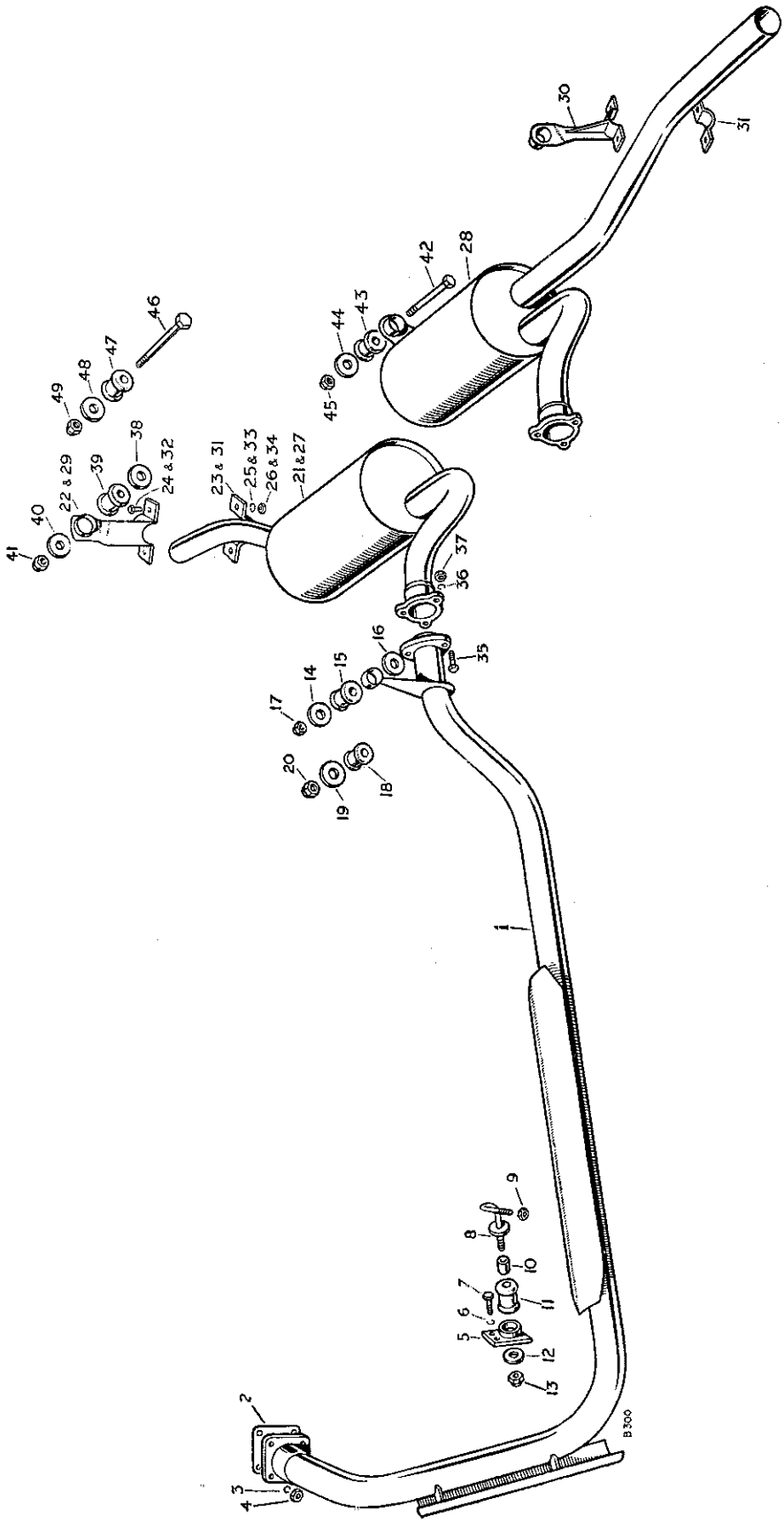

PLATE REF.

1
2
3
4
14
15
16
17
18
19
20
21
22
23
24
25
26
27
28
29
30
31
32
33
34
35
36
37
38
39
40
41
42
43
44
45
46
47
48
49

cardiagn.com

EXHAUST SYSTEM

PLATE REF.	1 2 3 4 DESCRIPTION	Qty.	Part No.	REMARKS
1	Front exhaust pipe complete	1	234668	
2	Joint washer for exhaust pipe	1	213358	
3	Spring washer } Fixing exhaust pipe	4	3075	
4	Nut ($\frac{5}{16}$") } to manifold	4	3771	
14	Plain washer, large } Fixing rear end	1	2255	Vehicles numbered 860001 to 06100155
15	Rubber bush } of front exhaust	1	217608	8670001 to 06200009
16	Plain washer, small } pipe to	1	3663	8680001 to 8688000
17	Self-locking nut ($\frac{5}{16}$") } chassis frame	1	50525	
18	Rubber bush } Fixing rear end of	1	217608	Vehicles numbered 06100156 onwards
19	Plain washer } front exhaust pipe	1	217245	06200010 onwards
20	Self-locking nut ($\frac{7}{16}$") } to chassis frame	1	251323	06300001 onwards
	Exhaust silencer complete assembly	1	233931	††
21	Exhaust silencer complete	1	219198	Vehicles numbered :
	Support bracket complete for tail pipe	1	233662	06111064 to 16100602, 16131572 and 16160908
22	Support bracket only	1	233618	06200287 to 16230080 and 16260020
23	Saddle for bracket	1	233619	06300030 to 16300002, 16330001 and 16360006
24	Bolt ($\frac{5}{16}$" x $\frac{13}{16}$" long) } Fixing bracket	2	218566	16630001 to 16630024, 16660001 to 16660786
25	Spring washer } and	2	3075	
26	Nut ($\frac{5}{16}$") } saddle together	2	3490	
27	Exhaust silencer complete	1	219198	R.H.D. } Vehicles numbered 16100603, 16131573, 16160909, 16200001, 16230081, 16260021, 16300003, 16330002, 16360007, 16630025 and 16660787 onwards
28	Exhaust silencer complete	1	234672	L.H.D.
29	Support bracket for tail pipe	1	233618	R.H.D.
30	Support bracket for tail pipe	1	236356	L.H.D.
31	Saddle for support bracket	1	233619	
32	Bolt ($\frac{5}{16}$" x $\frac{13}{16}$" long) } Fixing bracket	2	218566	
33	Spring washer } and saddle	2	3075	
34	Nut ($\frac{5}{16}$") } to tail pipe	2	3490	
35	Bolt ($\frac{5}{16}$" x $1\frac{3}{16}$" long) } Fixing silencer	3	237163	
36	Spring washer } to front	3	3075	
37	Nut ($\frac{5}{16}$") } exhaust pipe	3	3490	
38	Plain washer, large }	1	2255	Vehicles numbered 860001 to 06100155
39	Rubber bush } Fixing silencer pipe	1	217608	8670001 to 06200009
40	Plain washer, small } to chassis frame	1	3663	8680001 to 8688000
41	Self-locking nut ($\frac{5}{16}$") }	1	50525	
42	Bolt ($\frac{5}{16}$" x $5\frac{5}{16}$" long) }	1	215207	
43	Rubber bush } Fixing silencer pipe	1	217608	
44	Plain washer } to chassis frame	1	3663	*
45	Self-locking nut ($\frac{5}{16}$") }	1	251321	
46	Bolt ($\frac{5}{16}$" x $5\frac{5}{16}$" long) }	1	215207	R.H.D. } †
	Bolt ($\frac{5}{16}$" x $5\frac{11}{16}$" long) }	2	215211	L.H.D.
47	Rubber bush } Fixing silencer	1	217608	2 off } †
48	Plain washer } to chassis frame	1	3663	on
49	Self-locking nut ($\frac{5}{16}$") }	1	251321	L.H.D. } †

* Vehicles numbered
860001 to 16100602, 16131572 and 16160908
8670001 to 16230080 and 16260020
8680001 to 16300002, 16330001 and 16360006
16630001 to 16630024 16660001 to 16660786

† Vehicles numbered
16100603, 16131173, 16160909
16200001, 16230081, 16260021
16300003, 16330002, 16360007
16630025 and 16660787 onwards

†† Only supply complete assembly for vehicles numbered
860001 to 06111063
8670001 to 06200286
8680001 to 06300029

cardiagn.com

RADIATOR AND FITTINGS

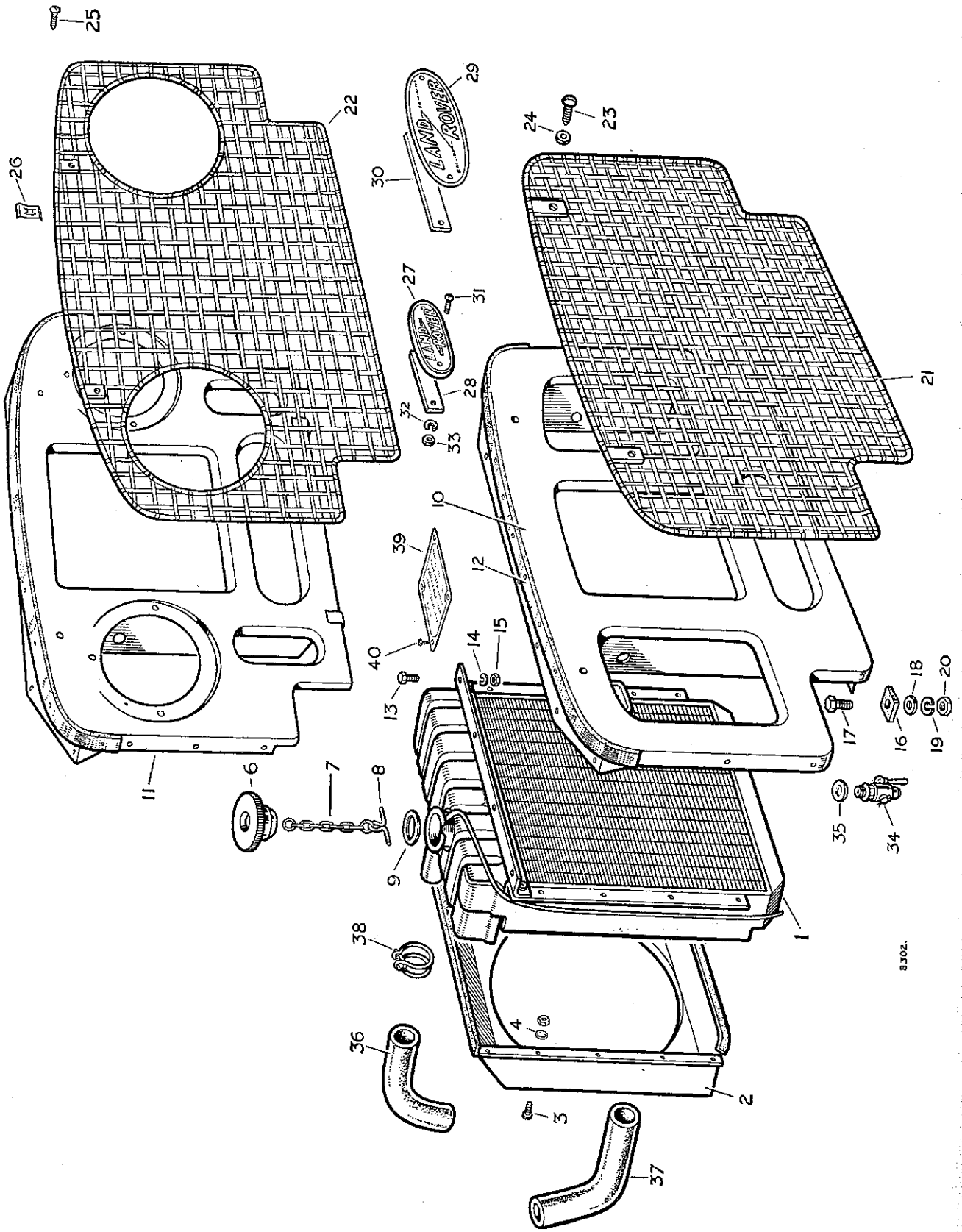

RADIATOR AND FITTINGS

PLATE REF.	1 2 3 4 DESCRIPTION	Qty.	Part No.	REMARKS
1	RADIATOR BLOCK ASSEMBLY	1	219245	
2	Cowl for fan	1	243373	
3	Screw (2 B.A. x $\frac{3}{8}''$ long) Fixing	10	73408	
4	Shakeproof washer cowl to	10	69402	
5	Nut (2 B.A.) radiator block	10	2247	
6	Filler cap for radiator (4 lb.)	1	217437	
7	Chain for filler cap	1	230328	
8	Retainer for chain	1	230329	
9	Joint washer for filler cap	1	217438	
10	RADIATOR GRILLE PANEL ASSEMBLY	1	300840	*
11	RADIATOR GRILLE PANEL ASSEMBLY	1	236019	†
12	Bonnet rest strip	1	300824	
	Bifurcated rivet fixing strip	12	68087	
13	Bolt ($\frac{1}{4}''$ x $\frac{21}{32}''$ long) Fixing	11	218552	
14	Spring washer radiator block	11	3074	
15	Nut ($\frac{1}{4}''$) to grille panel	11	3819	
16	Rubber buffer	6	306465	
17	Bolt ($\frac{5}{16}''$ x $1\frac{3}{16}''$ long)	3	214924	
18	Plain washer Fixing grille panel	6	2249	
19	Spring washer to chassis frame	3	3075	
20	Nut ($\frac{5}{16}''$)	3	3490	
21	Grille for radiator	1	300854	*
22	Grille for radiator	1	301900	†
23	Special screw Fixing grille and chaff	2	300853	
24	Plain washer guard to grille panel	4	3831	
25	Special screw Fixing grille and	2	78109	Alternative type. Check carefully before ordering
	Plain washer chaff guard to	2	3831	
26	Special nut grille panel	2	311970	
27	"Land-Rover" nameplate, small—$5\frac{1}{2}''$ overall	1	300999	
28	Backing washer for small plate	1	301142	Alternative type, check before ordering
29	"Land-Rover" nameplate, large—$7\frac{3}{16}''$ overall	1	302361	
30	Backing washer for large plate	1	302362	
31	Screw (2 B.A. x $\frac{1}{2}''$ long) Fixing	2	77700	
32	Spring washer nameplate	2	3073	
33	Nut (2 B.A.) to grille	2	3823	
34	Drain tap for radiator	1	243237	
35	Joint washer for drain tap	1	2347	
36	Hose for radiator, top	1	217273	
37	Hose for radiator, bottom	1	217274	
38	Clip for raditor hoses	4	50315	
39	Oil recommendation plate	1	235634	
40	Drive screw fixing plate	4	78001	

* Vehicles numbered 860004 to 06111546
8670001 to 06200311
8680001 to 06300030

† Vehicles numbered 06111547 onwards
06200312 onwards
06300031 onwards

cardiagn.com

FUEL SYSTEM

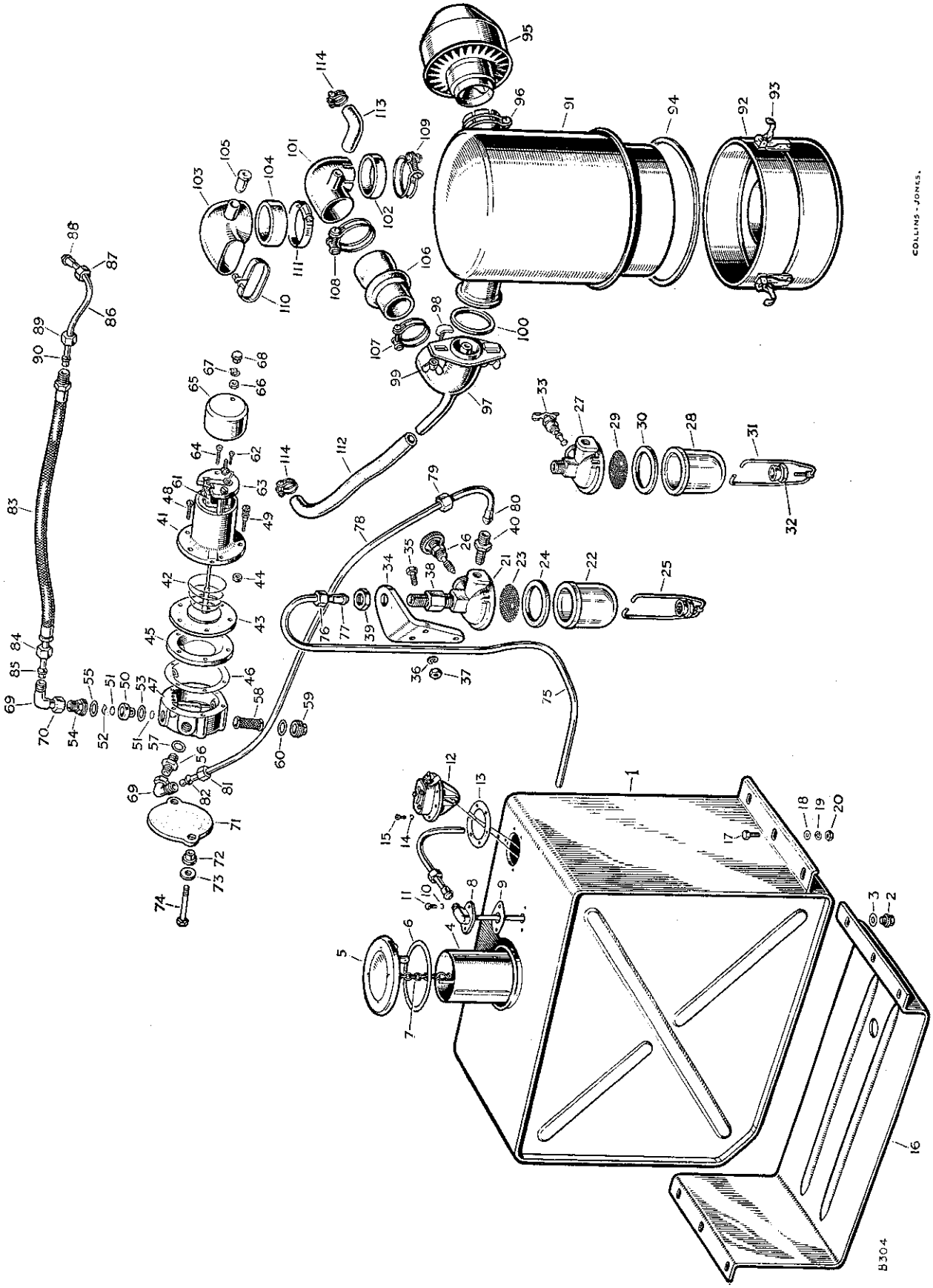

PLATE REF.
1
2
3
4
5
6
7
8
9
10
11
12
13
14
15
16
17
18
19
20
21
22
23
24
25
26
27
28
29
30
31
32
33
34
35
36
37
38
39
40
41
42
43
44
45
46
47
48
49

carbdiagram.com

FUEL SYSTEM

PLATE REF.	1 2 3 4 DESCRIPTION	Qty.	Part No.	REMARKS
1	Petrol tank complete	1	218020	
2	Drain plug for petrol tank	1	2885	
3	Joint washer for drain plug	1	2862	
4	Telescopic filler tube	1	231188	
5	Filler cap	1	231189	
6	Joint washer for cap	1	261509	
7	Chain for filler cap	1	231190	
8	Outlet elbow complete for tank	1	218024	
9	Joint washer for outlet elbow	1	267837	
10	Spring washer } Fixing elbow	2	3101	
11	Screw (3 B.A. x ½″ long) } to tank	2	3100	
12	Gauge unit for petrol tank	1	218021	
13	Joint washer for gauge unit	1	56398	
14	Spring washer } Fixing gauge	6	3101	
15	Screw (3 B.A. x ½″ long) } unit to tank	6	3100	
16	Undershield for petrol tank	1	230359	
17	Bolt (5/16″ x 29/32″ long) }	6	215163	
18	Plain washer } Fixing petrol tank and	6	2249	
19	Spring washer } undershield to	6	3075	
20	Nut (5/16″) } chassis frame	6	2828	
21	Petrol sediment bowl complete	1	274323	
22	Bowl only	1	236891	
23	Gauze for bowl	1	261418	Alternative to the 8 lines below. Check carefully before ordering
24	Joint washer for bowl	1	261417	
25	Retainer for bowl	1	261419	
26	Tap and gland complete	1	261415	
27	Petrol sediment bowl complete	1	235682	
	Body for sediment bowl	1	262278	
28	Bowl only	1	236896	
29	Gauze for bowl	1	236894	
30	Joint washer for bowl	1	236895	Alternative to the 6 lines above. Check carefully before ordering
31	Retainer for bowl	1	240234	
32	Screw cap for retainer	1	240235	
33	Tap and gland complete	1	240236	
34	Bracket for sediment bowl	1	218468	
35	Bolt (¼″ x ⅝″ long) }	3	215053	
36	Spring washer } Fixing bracket to to dash	3	3074	
37	Nut (¼″) }	3	2823	
38	Inlet adaptor for sediment bowl	1	218471	
39	Special nut fixing adaptor and bowl to bracket	1	218470	
40	Outlet union for sediment bowl	1	218469	
	Petrol pump complete	1	268374	
41	Coil complete	1	262286	
42	Spring for armature	1	262304	
43	Diaphragm complete	1	260550	
44	Roller for diaphragm	11	260583	
45	Plate body	1	262299	
46	Joint washer for plate body	1	262300	
47	Body	1	262287	
48	Screw fixing coil housing to body	5	262301	
49	Special screw for earth terminal	1	262302	
	Special spring washer } For earth	1	262303	
	Special nut } terminal screw	1	262309	

cardiagn.com

FUEL SYSTEM

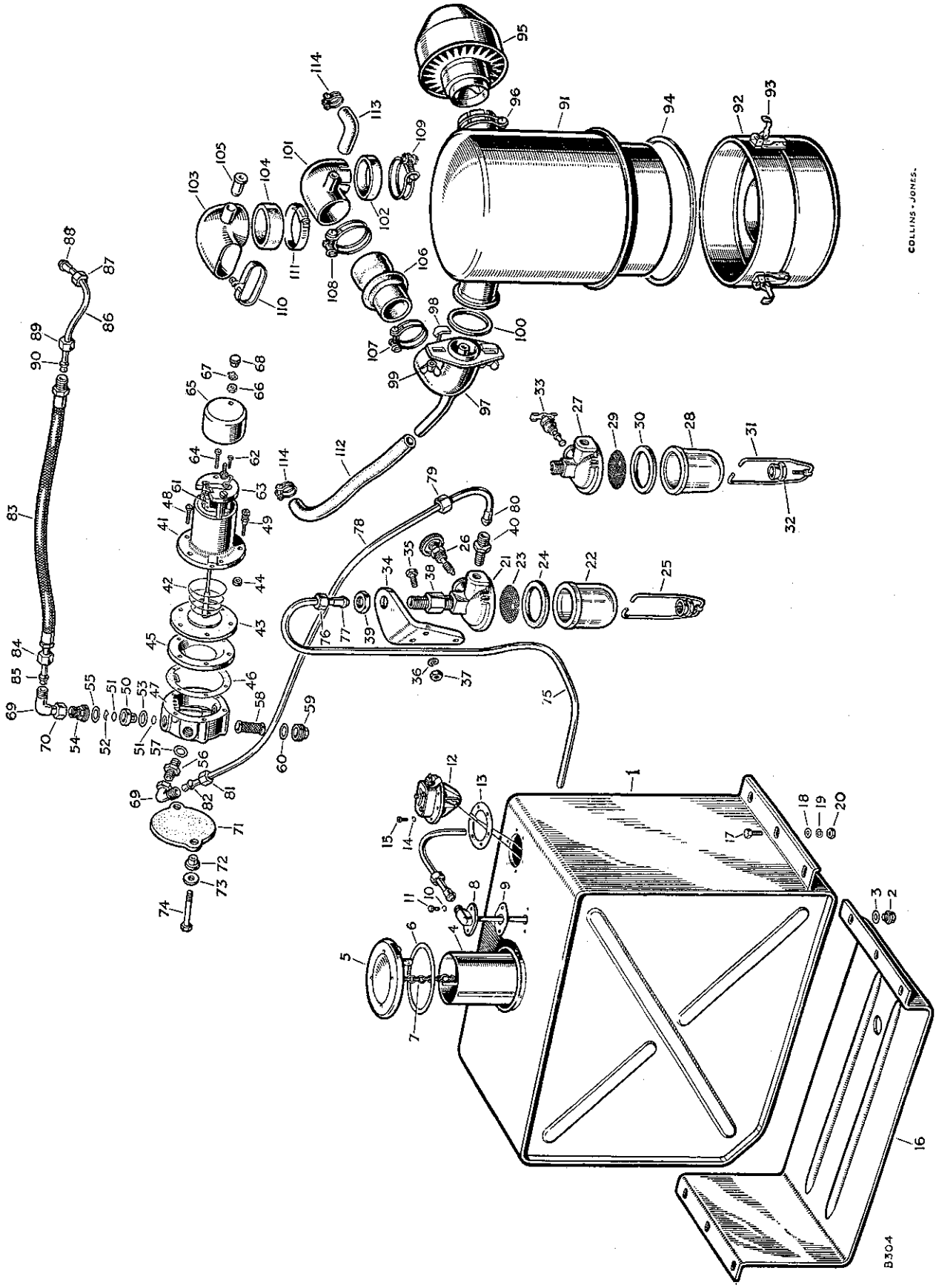

FUEL SYSTEM

PLATE REF.	1 2 3 4 DESCRIPTION	Qty.	Part No.	REMARKS
50	Valve cage	1	262288	
51	Disc for valve	2	262297	
52	Spring clip retaining valve disc	1	262289	
53	Washer for valve cage	1	262290	
54	Outlet union	1	262294	
55	Washer for outlet union	1	262293	
56	Inlet union	1	262296	
57	Washer for inlet union	1	262298	
58	Filter	1	262292	
59	Plug for filter	1	262295	
60	Washer for filter plug	1	262293	
61	Contact set complete	1	268674	
62	Special screw for contact blade	1	262310	
63	Moulding for end plate	1	260585	
64	Screw fixing moulding	2	262308	
	Terminal screw	1	262307	
	Special nut for terminal screw	1	262306	
65	Cover for end plate	1	234309	
66	Terminal nut	1	262306	
67	Tag for terminal	1	262305	
68	Knurled nut	1	262311	Alternative, check before ordering
	Spring washer	1	3073	
	Nut (2 B.A.)	1	3926	
69	Elbow for pump	2	50499	
	Olive — Fixing elbow to pump	2	3136	
70	Nut — Fixing elbow to pump	2	50421	
71	Mounting plate — Fixing electric petrol pump	1	212557	
72	Rubber bush — Fixing electric petrol pump	2	212558	
73	Plain washer — Fixing electric petrol pump	2	2228	
74	Special set bolt — Fixing electric petrol pump	2	212556	
	Petrol pipe complete, tank to bowl	1	218959	Vehicles numbered 860001 to 861500
75	Petrol pipe complete, tank to bowl	1	231277	Vehicles numbered 861501 onwards
76	Nut — Fixing pipe to tank and bowl	2	2729	
77	Nipple — Fixing pipe to tank and bowl	2	2728	
	Petrol pipe complete, bowl to pump	1	218957	Vehicles numbered 860001 to 861500
78	Petrol pipe complete, bowl to pump	1	230240	Vehicles numbered 861501 onwards
79	Nut — Fixing pipe to bowl and pump	1	2729	
80	Nipple — Fixing pipe to bowl and pump	1	2728	
81	Nut — Fixing pipe to bowl and pump	1	50421	
82	Olive — Fixing pipe to bowl and pump	1	3136	
83	Flexible petrol pipe complete	1	275376	
84	Nut — Fixing pipe to pump	1	50421	
85	Olive — Fixing pipe to pump	1	3136	
86	Petrol pipe complete, flex to carburettor	1	218955	
88	Nipple — Fixing pipe to flex and carburettor	1	2728	
87	Nut — Fixing pipe to flex and carburettor	1	2729	
89	Nut — Fixing pipe to flex and carburettor	1	50421	
90	Olive — Fixing pipe to flex and carburettor	1	3136	

cardiagn.com

FUEL SYSTEM

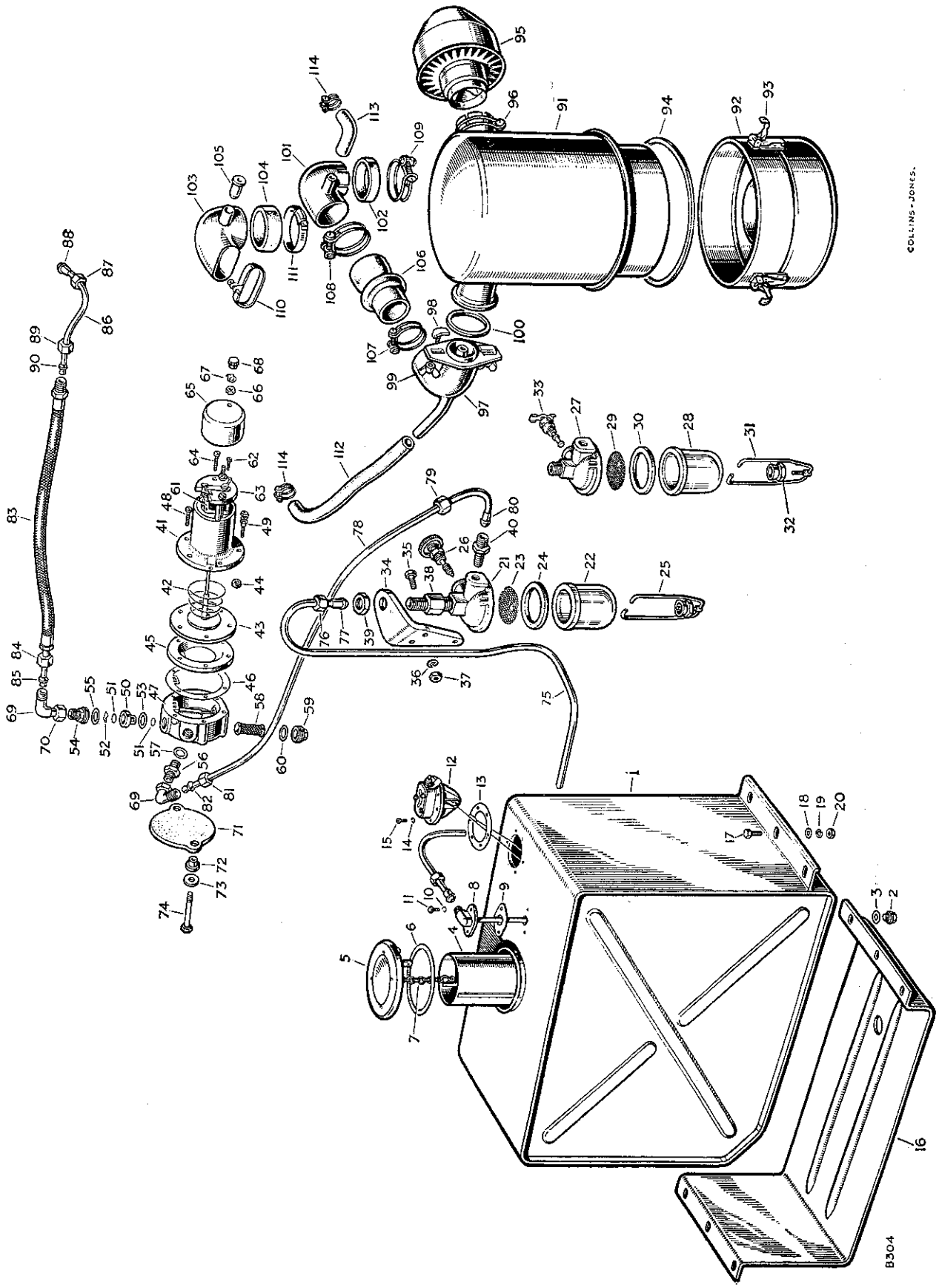

FUEL SYSTEM

PLATE REF.	1 2 3 4 DESCRIPTION	Qty.	Part No.	REMARKS
	Oil bath air cleaner complete	1	217397	
91	Filter and case	1	261412	
92	Oil container	1	261413	
93	Toggle clip for oil container	3	262068	
94	Cork washer for oil container	1	261414	
95	Centrifugal air cleaner	1	217396	
96	Clip fixing cleaners together	1	232992	
	CONNECTING TUBE ASSEMBLY FOR AIR CLEANER	1	231531	
97	Connecting tube	1	231515	
98	Clamp for connecting tube	2	231517	
99	Wing nut for clamp	2	3580	
100	Rubber sealing ring for connecting tube	1	217578	
101	Elbow for air cleaner, to carburettor	1	218182	Vehicles numbered 860001 to 06100279, 8670001 to 06200015 and 8680001 to 8688000
102	Air seal for elbow	1	230035	
103	Elbow for air cleaner, to carburettor	1	231494	Vehicles numbered 06100280, 06200016 and 06300001 onwards
104	Air seal for elbow	1	231594	
105	Restrictor for air cleaner elbow	1	232635	
106	Rubber connection, elbow to connecting tube	1	217575	
107	Clip fixing rubber connection to tube	1	50323	
108	Clip fixing rubber connection to elbow	1	50328	Vehicles numbered 860001 to 06100279, 8670001 to 06200015 and 8680001 to 8688000
109	Clip fixing elbow to carburettor	1	50330	
110	Clip fixing rubber connection to elbow	1	232451	Vehicles numbered 06100280, 06200016 and 06300001 onwards
111	Clip fixing elbow to carburettor	2	232992	
112	Rubber connection, tube to rocker cover	1	232651	
113	Rubber connection, elbow to crankcase breather	1	217577	
114	Clip for rubber connections	4	50303	

cardiagn.com

INSTRUMENTS

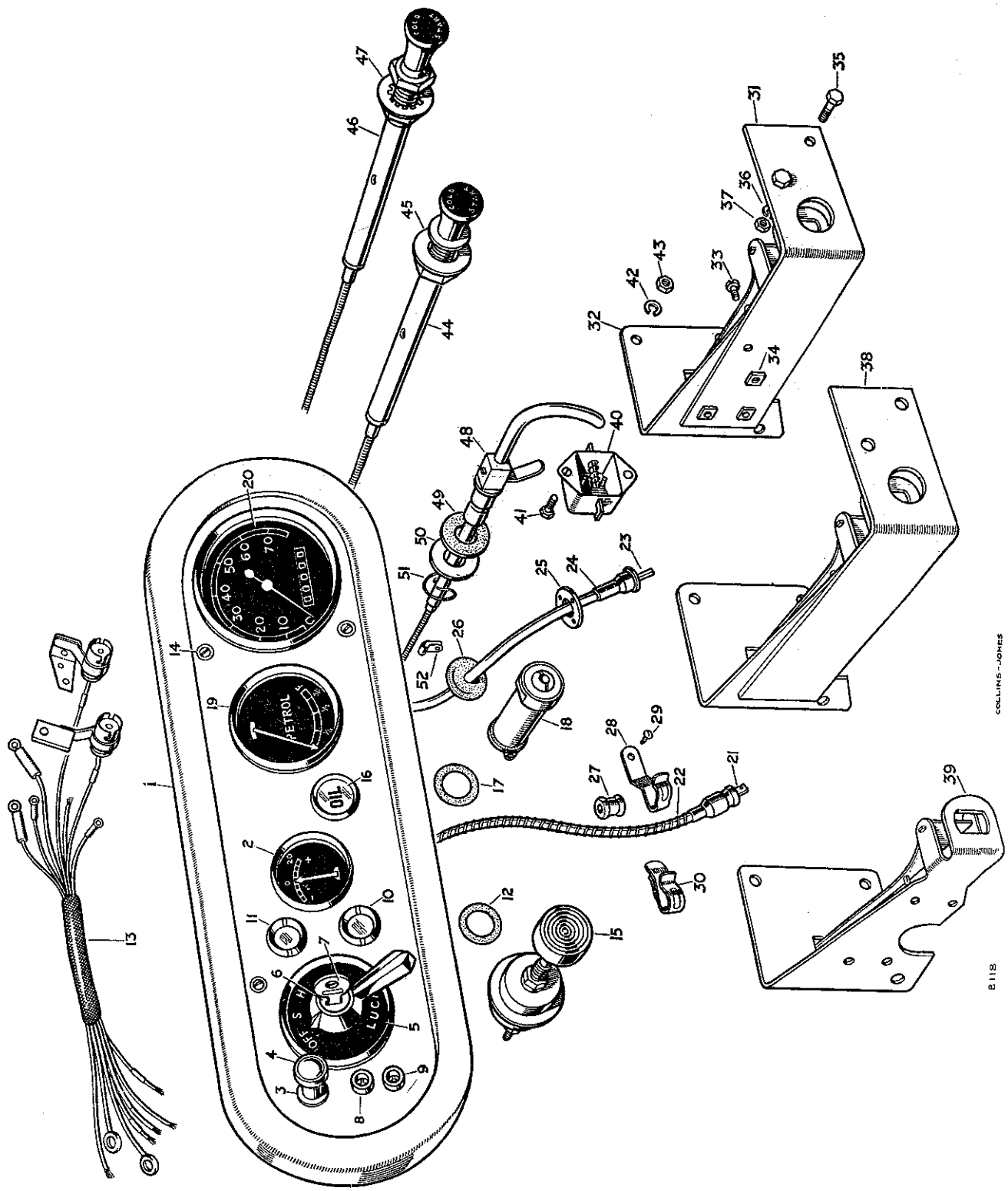

cardiagn.com

INSTRUMENTS

PLATE REF.	1 2 3 4 DESCRIPTION	Qty.	Part No.	REMARKS
	INSTRUMENT PANEL ASSEMBLY	1	218579	
1	Instrument panel only	1	302437	
	Instrument panel only	1	238028	North America only
2	Ammeter	1	234563	
3	Switch for panel lights	1	217764	
4	Knob for panel light switch	1	261969	
5	Switch for lamps and ignition	1	217589	
6	Barrel lock for ignition	1	59895	
7	Key for lock	1	29979	State key number when ordering
8	Socket for inspection lamp, black	1	273935	
9	Socket for inspection lamp, red	1	219654	
10	Warning light, ignition	1	238018	
11	Warning light, mixture	1	234996	†
	Warning light, mixture	1	238020	*
	Bulb for warning light—2.5 volt	2	10541	Alternative, check before ordering
	Bulb for warning light—12 volt	2	232590	Alternative, check before ordering
12	Washer for warning light	2	235556	
13	Panel harness	1	219670	*
	Panel harness	1	234922	†
	Bulb for panel light	2	10211	
14	Set screw (2 B.A. x ½″ long) — Fixing instrument panel	4	77700	
	Plain washer — Fixing instrument panel	4	3816	
	Spring washer — Fixing instrument panel	4	3073	
15	Starter switch	1	237540	
	Warning light, oil	1	234997	†
	Warning light, oil	1	238019	*
	Bulb for warning light	1	232590	
17	Washer for warning light	1	235556	
18	Warning light for headlamp beam	1	234401	America. Dollar area
19	Petrol level gauge	1	217630	
20	Speedometer, miles	1	231911	
	Speedometer, kilometres	1	231910	
	Cable complete for speedometer	1	08972	Vehicles numbered 860001 to 06105830
21	Cable, inner	1	42895	8670001 to 06200140
22	Cable, outer	1	42896	8680001 to 06300030
	Cable complete for speedometer	1	232570	Vehicles numbered 06105831, 06200141 and 06300031 onwards
23	Cable, inner	1	234536	Vehicles numbered 06105831, 06200141 and 06300031 onwards
24	Cable, outer	1	234537	Vehicles numbered 06105831, 06200141 and 06300031 onwards
25	Retaining plate for cable	1	232566	Vehicles numbered 06105831, 06200141 and 06300031 onwards
	Spring washer — Fixing retaining plate	3	3073	Vehicles numbered 06105831, 06200141 and 06300031 onwards
	Set bolt — Fixing retaining plate	3	3610	Vehicles numbered 06105831, 06200141 and 06300031 onwards
26	Rubber grommet, in dash — For speedometer cable	1	71734	
27	Rubber grommet, on cable — For speedometer cable	2	06860	
28	Clip for cable grommet	2	3618	1 off from vehicles numbered †
29	Drive screw fixing clip	2	72626	1 off from vehicles numbered †
	Clip — Fixing speedometer cable	1	56667	R H D
	Drive screw — Fixing speedometer cable	1	72627	R H D
	Rubber grommet — Fixing speedometer cable	1	06860	R H D

* Vehicles numbered 860001 to 16101655, 16133213, 16161501
8670001 to 16230080, 16260020
8680001 to 16300003, 16330003, 16360007
16630001 to 16630042 and 16660001 to 16661476

† Vehicles numbered 16101656, 16133214, 16161502, 16200001, 16230081, 16260021, 16300004, 16330004, 16360008, 16630043 and 16661477 onwards

cardiagn.com

INSTRUMENTS

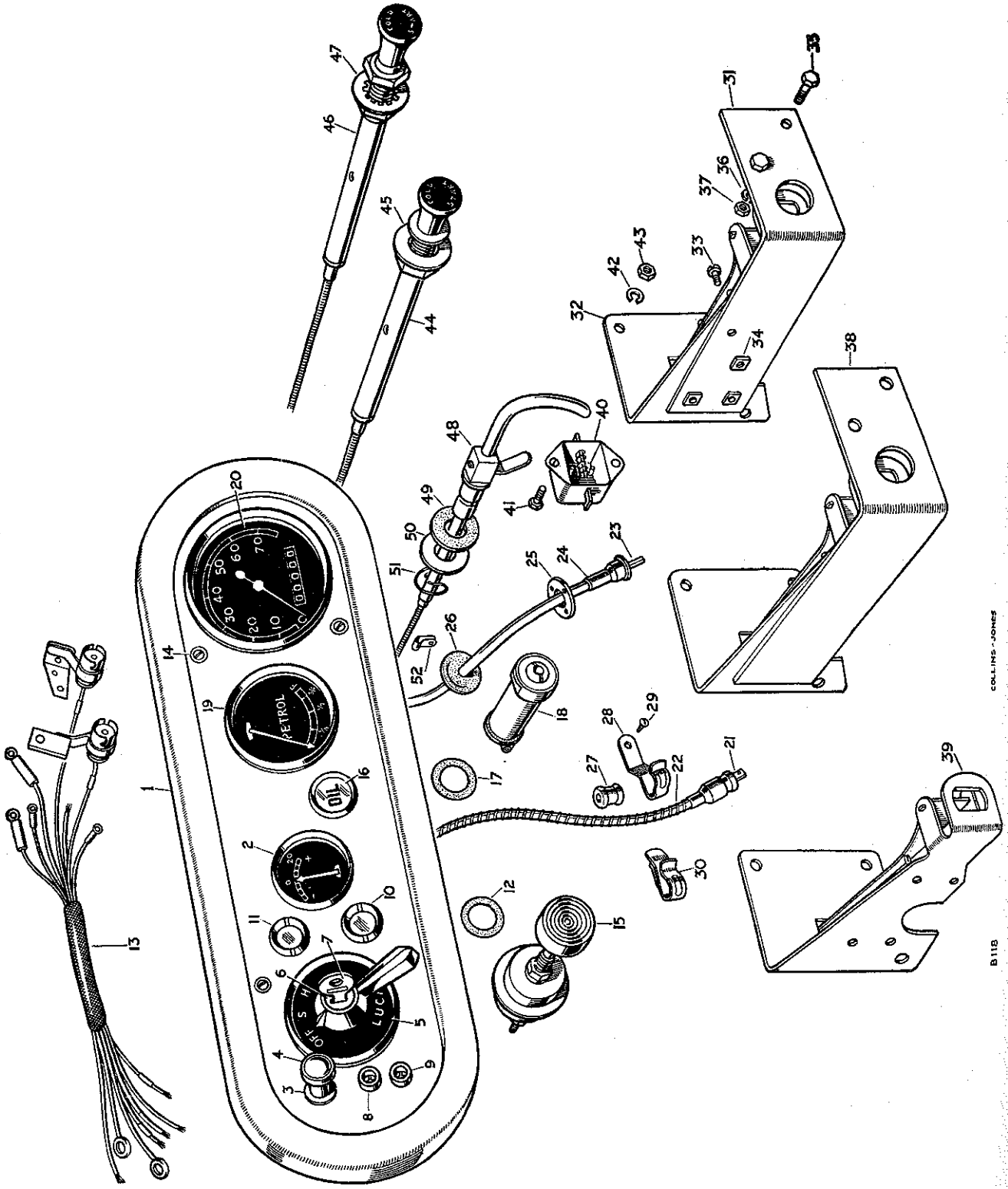

INSTRUMENTS

PLATE REF.	1 2 3 4	DESCRIPTION	Qty.	Part No.	REMARKS
31		Bracket for mixture control	1	216380	
32		Support for mixture control bracket	1	219745	
33		Screw (4 B.A. x $\frac{3}{8}$" long) Fixing support	3	77701	
34		Square nut (4 B.A.) to bracket	3	70904	Vehicles numbered 860001 to 06104682
35		Bolt ($\frac{1}{4}$" x $\frac{9}{16}$" long) Fixing	2	218556	8670001 to 06200106
36		Spring washer bracket	2	3074	8680001 to 06300021
37		Nut ($\frac{1}{4}$") to dash	2	2823	
38		Bracket for mixture control	1	233624	*
39		Bracket for mixture control	1	216380	†
40		Switch for mixture warning light	1	214223	
41		Bolt (2 B.A. x $\frac{7}{16}$" long) Fixing	2	234603	
42		Spring washer switch to	2	3073	
43		Nut (2 B.A.) bracket	2	2247	
44		Mixture control complete	1	233395	Vehicles numbered 860001 to 06111527, 8670001 to
45		Plain washer for mixture control	1	3310	06200311, 8680001 to 06300030
46		Mixture control complete	1	233638	Vehicles numbered 06111528, 06200312 and 06300031
47		Shakeproof washer for control	1	233017	onwards
48		Hand throttle control complete	1	239016	
49		Cork washer for hand throttle	1	232095	
50		Plain washer Fixing hand throttle	1	232096	
51		Circlip to dash	1	232097	
52		Cable clip for control cable	1	219501	
		Screw (2 B.A. x $\frac{1}{2}$" long) Fixing hand	1	71164	
		Spring washer throttle control	1	3073	
		Nut (2 B.A.) cable to bracket	1	2247	

* Vehicles numbered 06104683 to 06111527
06200107 to 06200311
06300022 to 06300030

† Vehicles numbered 06111528, 06200312 and 06300031 onwards

cardiagn.com

HEAD, SIDE AND TAIL LAMPS

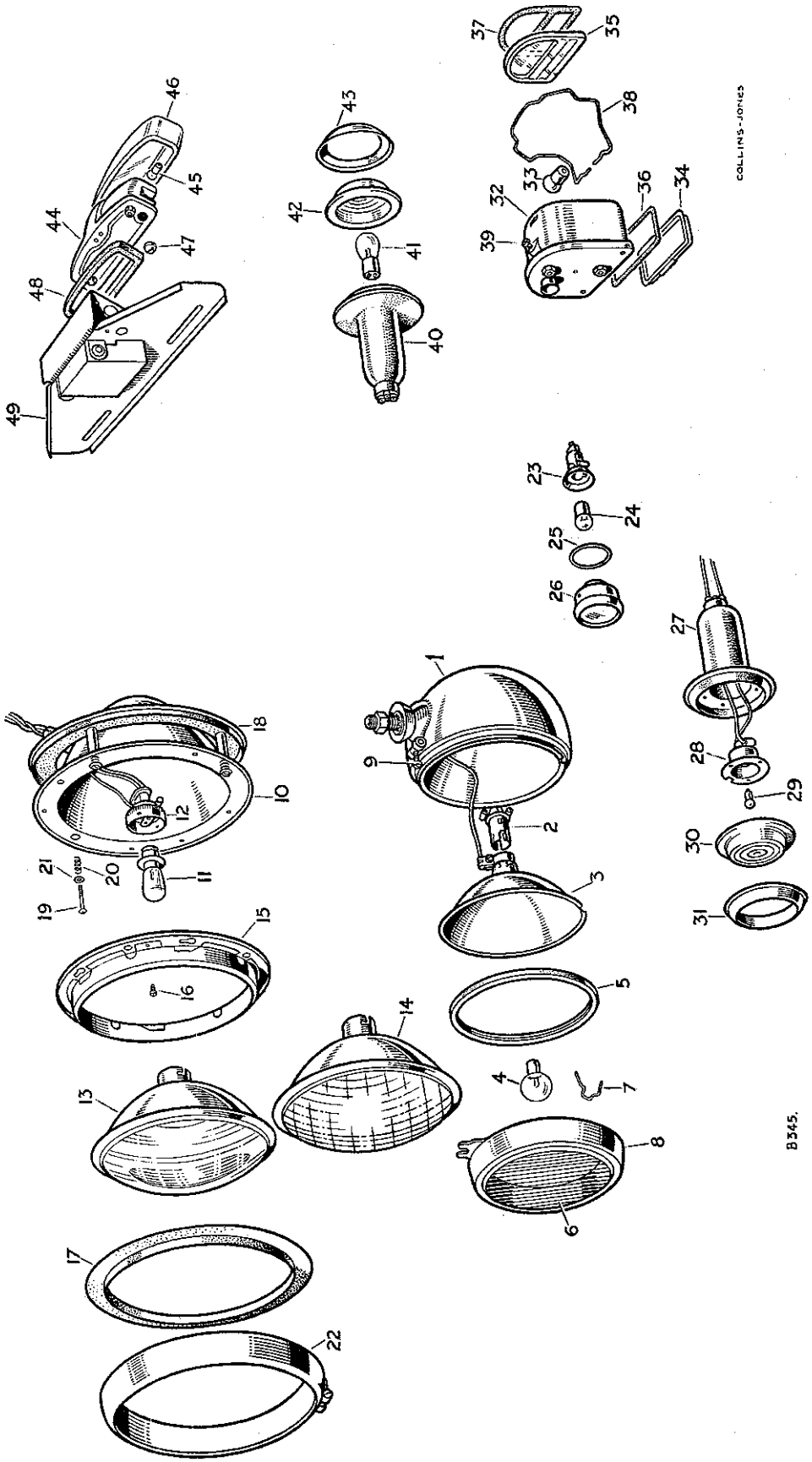

HEAD, SIDE AND TAIL LAMPS

PLATE REF.	1 2 3 4 DESCRIPTION	Qty.	No.	REMARKS
1	Headlamp complete	2	217271	Vehicles numbered 860001 to 06111546, 8670001 to 06210311, 8680001 to 06300030
2	Bulb holder	2	261494	
3	Reflector	2	261493	
4	Bulb (12 v. 36/36 w.) for headlamp	2	50298	
5	Bead for glass	2	261495	
6	Glass	2	261491	
7	Wire clips fixing glass, set	2	261492	
8	Rim assembly	2	261490	
9	Screw for headlamp rim	2	262063	
	Headlamp complete, R.H.	1	234086	Home Models *
	Headlamp complete, L.H.	1	233538	
	Headlamp complete	2	233538	R.H.D. Export *
	Headlamp complete	2	233539	L.H.D. Export *
	Headlamp complete	2	235663	R.H.D. †
	Headlamp complete	2	234664	L.H.D. Except Europe †
	Headlamp complete	2	235665	L.H.D. Europe except France †
	Headlamp complete	2	235666	France only †
	Headlamp shell and connector	2	234365	America Dollar area
10	Body for headlamp	2	261995	Vehicles numbered 06111547, 06200312 and 06300031 onwards
	Bulb for R.H. headlamp	1	232853	Home Models *
11	Bulb for L.H. headlamp	1	235232	
	Bulb for headlamp	2	235232	R.H.D. Export *
	Bulb for headlamp	2	235119	L.H.D. Export *
	Bulb for headlamp	2	235232	R.H.D. †
	Bulb for headlamp	2	232852	L.H.D. Except Europe †
	Bulb for headlamp	2	244128	L.H.D. Europe except France †
	Adaptor for bulb, single contact, R.H.	1	262064	Home Models Export France only Vehicle numbered 06111547, 06200312 and 06300031 onwards
12	Adaptor for bulb, double contact, L.H.	1	261792	
	Adaptor for bulb, double contact	2	261792	
	Adaptor for bulb, triple contact	2	261794	
14	Light unit "Block-pattern" lens	2	262268	R.H.D. †
	Light unit "Block-pattern" lens	2	262342	L.H.D. Except Europe †
	Light unit "Block-pattern" lens	2	262343	L.H.D. Europe except France †
	Light unit, triple contact "Block-pattern" lens	2	262269	France only †
15	Rim complete for light unit	2	261791	Vehicles numbered 06111547, 06200312 and 06300031 onwards
16	Special screw for light unit rim	6	262100	
17	Rubber gasket for headlamp rim	2	262101	
18	Gasket for body	2	261793	
19	Special screw Light unit adjustment	6	261940	
20	Spring for screw Light unit adjustment	6	261941	
21	Cup washer for screw Light unit adjustment	6	261943	
22	Rim for headlamp, chromium plated	2	262051	Alternative, check before ordering
	Rim for headlamp, vehicle colour	2	237896	
	Side lamp complete	2	217588	Vehicles numbered 860001 to 16103898, 16136865, 16163017, 16230080, 16260020, 16300004, 16330007, 16360009, 16630078 and 16662022
23	Interior assembly	2	261498	
24	Bulb (12 v. 6 w.) for side lamp	2	10211	
25	Bead for rim	2	261497	
26	Rim assembly	2	261496	

* Fluted lens type headlamp. Check carefully before ordering.

† "Block-pattern" lens type headlamp. Check carefully before ordering.

cardiagn.com

HEAD, SIDE AND TAIL LAMPS

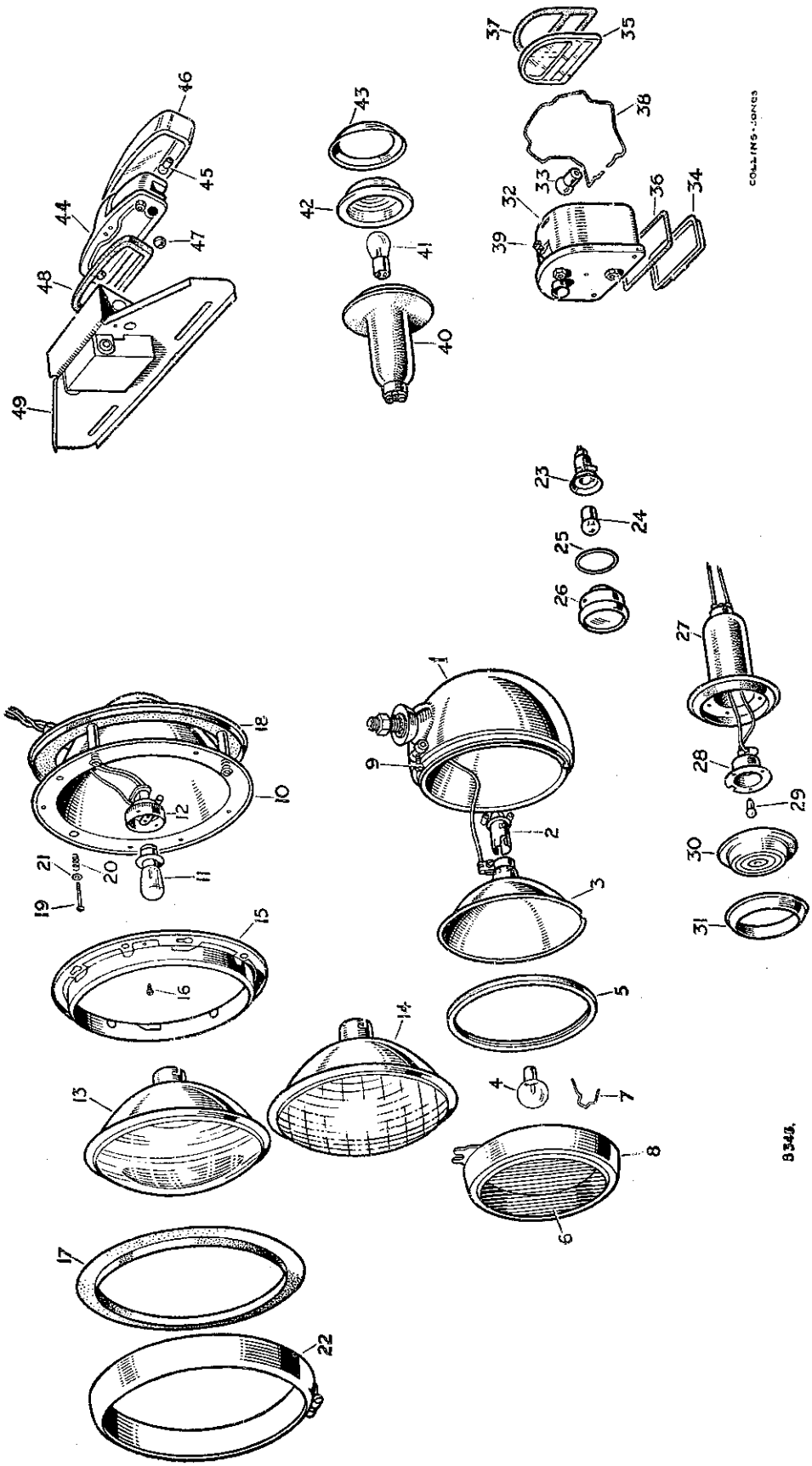

HEAD, SIDE AND TAIL LAMPS

PLATE REF.	1 2 3 4 DESCRIPTION	Qty.	Part No.	REMARKS
	Side lamp complete	2	236102	Vehicles numbered 16103899, 16136866, 16163018, 16200001, 16230081, 16260021, 16300005, 16330008, 16360010, 16630079, and 16662023 onwards
	Bulb for side lamp	2	242491	
	Rim complete	2	262631	
	Gasket for body	2	262632	
	Glass	2	237041	
	Bulb interior	2	244700	
	Body	2	262635	
	Screw (4 B.A x ⅜″ long) — Fixing side lamp to front wing	6	75804	
	Spring washer — Fixing side lamp to front wing	6	3072	
	Nut (4 B.A.) — Fixing side lamp to front wing	6	75805	
	Side lamp	2	232108	America. Dollar area. Up to Vehicles numbered 16136865
27	Rubber body	2	261638	
28	Bulb holder	2	261998	
29	Bulb for side lamp	2	242491	
30	Glass	2	261639	
31	Rim for glass	2	261640	
	Screw (4 B.A. x ⅜″ long) — Fixing side lamp to front wing	6	75084	
	Spring washer — Fixing side lamp to front wing	6	3072	
	Nut (4 B.A.) — Fixing side lamp to front wing	6	75805	
	Special screw fixing side lamp	2	77701	
32	Stop tail lamp complete	2	217618	
33	Bulb (12 v. 6 w.) for stop tail lamp	4	10211	
34	Glass for number plate illumination, white	2	261500	
35	Glass for stop and tail lights, red	2	260039	
36	Gasket for number plate illumination glass	2	260059	
37	Gasket for stop tail glass	2	260682	
38	Spring retaining glasses	2	261499	
39	Screw fixing body	2	261501	
	Stop tail lamp	2	234212	America. Dollar area
40	Rubber body	2	261638	
41	Bulb for stop tail lamp	2	233310	
42	Glass	2	261641	
43	Rim for glass	2	261640	
	Screw (4 B.A. x ⅜″ long) — Fixing tail lamp to body	6	75804	
	Spring washer — Fixing tail lamp to body	6	3072	
	Nut (4 B.A.) — Fixing tail lamp to body	6	75805	
44	Number plate lamp	1	234213	
45	Bulb for number plate lamp	1	242491	
46	Glass	1	261919	
47	Rubber grommet for wire	1	261252	
48	Rubber gasket for lamp	1	261253	
49	Support for lamp	1	302298	
	Screw (2 B.A x ⅜″ long) — Fixing support to tailboard	2	77846	
	Spring washer — Fixing support to tailboard	2	3073	
	Nut (2 B.A.) — Fixing support to tailboard	2	2247	

cardiagn.com

GENERAL ELECTRICAL EQUIPMENT

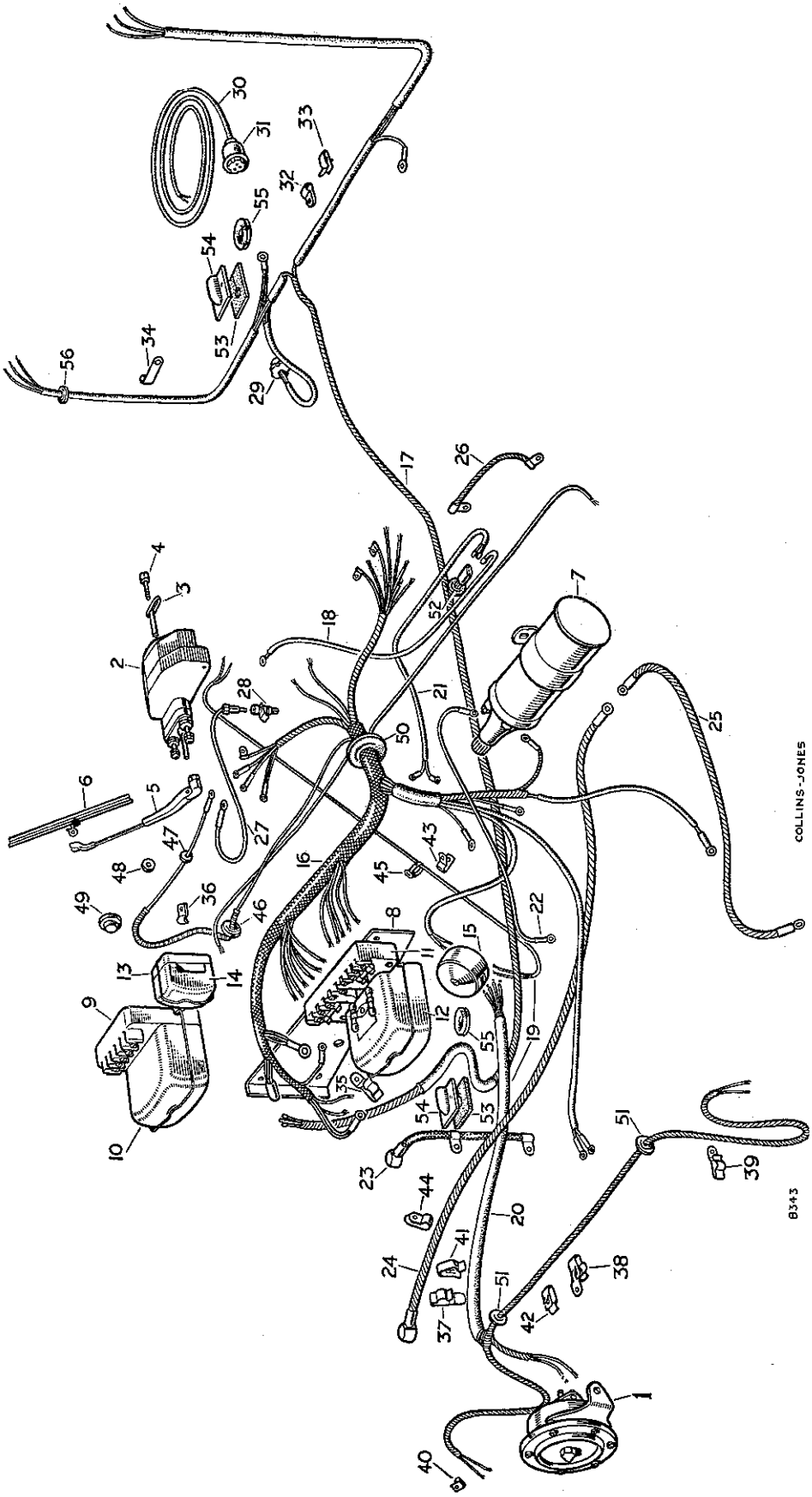

cardiagn.com

GENERAL ELECTRICAL EQUIPMENT

PLATE REF. 1 2 3 4	DESCRIPTION	Qty.	Part No.	REMARKS
1	Electric horn	1	237435	
	Contact set for horn	1	262636	
	Bolt ($\frac{3}{8}$" x $\frac{29}{32}$" long) } Fixing electric horn	1	214936	
	Spring washer } Fixing electric horn	1	3076	
	Nut ($\frac{3}{8}$") } Fixing electric horn	1	3485	
2	Windscreen wiper motor, complete	1	231553	
3	Chrome starter arm for wiper motor	1	261836	
4	Special screw fixing arm	1	261837	
5	Arm for wiper blade	1	261503	
6	Wiper blade	1	261504	
	Drive screw earthing wiper motor	1	72626	
	Battery, dry	1	270167	
7	Ignition coil	1	263732	
	Cable nut for coil	1	240102	
	Drive screw fixing coil	2	72628	
	Mounting plate for control box and fuse box	1	219891*	
8	Mounting plate for control box	1	232674†	
	Bolt ($\frac{1}{4}$" x $\frac{5}{8}$" long) } Fixing mounting plate to dash	3	215053	
	Spring washer } Fixing mounting plate to dash	3	3074	
	Nut ($\frac{1}{4}$") } Fixing mounting plate to dash	3	2823	
9	Voltage control box	1	217277	*
10	Cover for control box	1	262859	*
11	Voltage control box	1	216014	**
12	Cover for control box	1	261246	**
	Fuse, 35 amp.	2	12738	**
	Voltage control box	1	235553	††
	Cover for control box	1	262859	††
	Insulation plate for voltage control box	1	237243	††
	Screw (2 B.A x $1\frac{1}{4}$" long) } Fixing voltage control box	2	77992	
	Spring washer } Fixing voltage control box	2	3073	
	Nut (2 B A.) } Fixing voltage control box	2	2247	
13	Fuse box	1	219078	*
14	Cover for fuse box	1	261502	*
	Fuse 25 amp.	1	40167	*
	Special screw } Fixing fuse box	2	3279	*
	Special nut } Fixing fuse box	2	3280	*
	Fuse box	1	219078	††
	Cover for fuse box	1	261502	††
	Fuse 35 amp.	1	12738	††
	Special screw } Fixing fuse box	2	3279	††
	Special nut } Fixing fuse box	2	3280	††
15	Junction box	1	03971	
	Screw (2 B.A. x $\frac{1}{2}$" long) } Fixing junction box	2	71164	
	Spring washer } Fixing junction box	2	3073	
	Nut (2 B.A.) } Fixing junction box	2	2247	
	Main cable harness complete	1	219484	Vehicles numbered 860001 to 06105830, 8670001 to 06200140, 8680001 to 06300030
16	Dash harness	1	231404	Vehicles numbered 860001 to 06105830, 8670001 to 06200140, 8680001 to 06300030
17	Frame harness	1	231405	Vehicles numbered 860001 to 06105830, 8670001 to 06200140, 8680001 to 06300030
18	Cable, petrol tank to frame harness	1	231406	Vehicles numbered 860001 to 06105830, 8670001 to 06200140, 8680001 to 06300030
	Main cable harness complete	1	232672	Vehicles numbered 0610583 to 06111546, 06200141 to 06200311
	Dash harness	1	232673	Vehicles numbered 0610583 to 06111546, 06200141 to 06200311
	Frame harness	1	231405	Vehicles numbered 0610583 to 06111546, 06200141 to 06200311
	Cable, petrol tank to frame harness	1	231406	Vehicles numbered 0610583 to 06111546, 06200141 to 06200311

* Vehicles numbered 860001 to 06106034, 8670001 to 06200139 8680001 to 06300030

** Vehicles numbered 06106035 to 16103898, 16136865 and 16163017, 06200140 to 16230080 and 16260020, 06300031 to 16300004, 16330007, 16360009, 16630078 and 16662022

† Vehicles numbered 06106035, 06200140 and 06300031 onwards

†† Vehicles numbered 16103899, 16136866, 16163018, 16200001, 16230081, 162600021, 16300005, 16330008, 16360010, 16630079 and 16662023 onwards

cardiagn.com

GENERAL ELECTRICAL EQUIPMENT

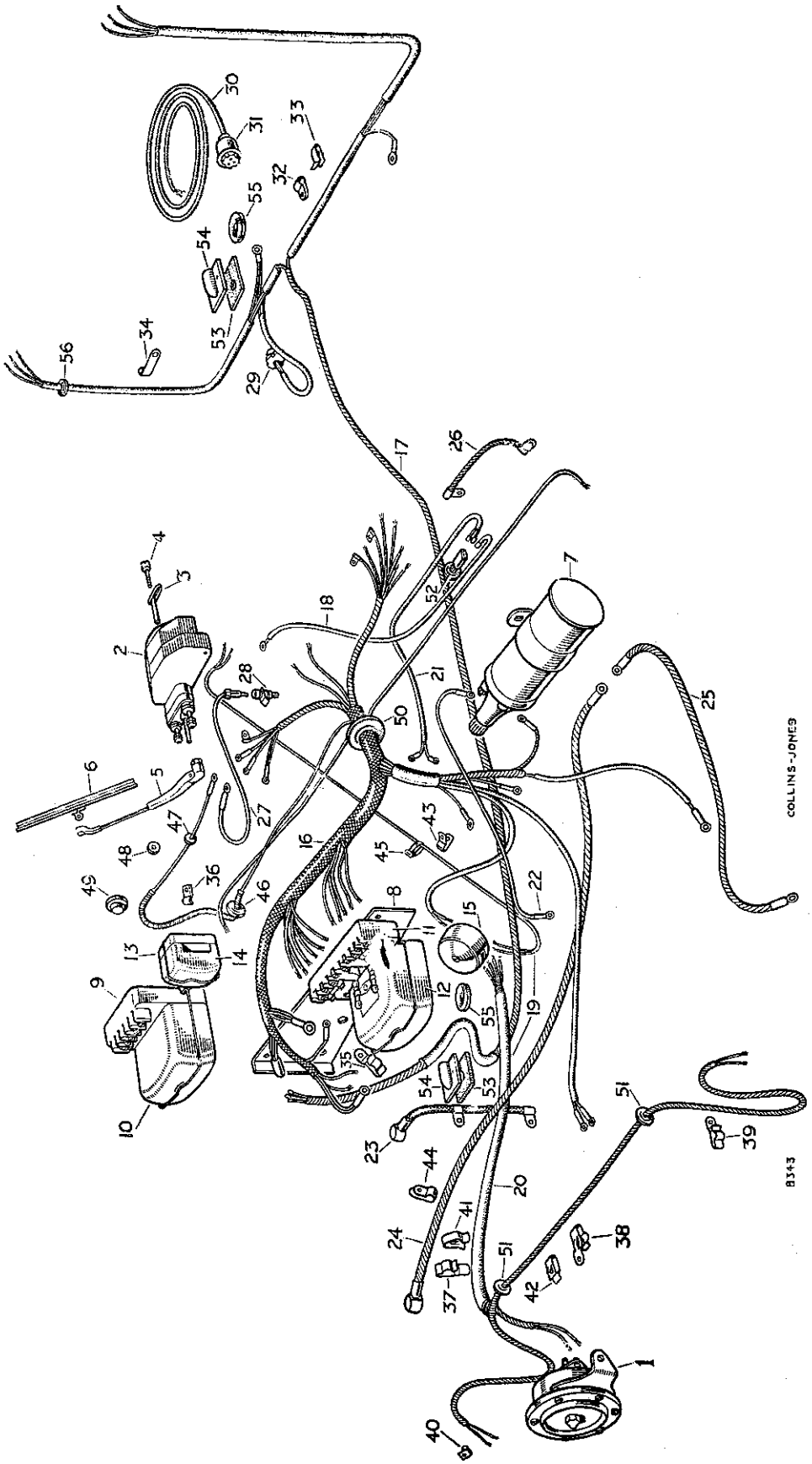

GENERAL ELECTRICAL EQUIPMENT

PLATE REF. 1 2 3 4	DESCRIPTION	Qty.	Part No.	REMARKS
	Main cable harness complete	1	236062	Vehicles numbered 06111547 onwards
	Dash harness	1	236063	
	Frame harness	1	231405	06200312 onwards
	Cable, petrol tank to frame harness	1	231406	06300031 onwards
	Main harness complete	1	236064	America. Dollar area up to Vehicle numbered 16136865
	Dash harness	1	236065	
	Frame harness	1	234303	
19	Headlamp and horn cable harness	1	219646	*
	Headlamp and horn cable harness	1	233281	R.H.D. **
	Headlamp and horn cable harness	1	233280	L.H.D. **
20	Sheath for headlamp and horn harness	1	233528	R.H.D.
	Harness, headlamp, side lamp and horn	1	234304	America. Dollar area up to Vehicle numbered 16136865
	Sheath for side lamp leads	1	233463	
	Rubber grommet } For side lamp leads	2	233243	
	Clip } For side lamp leads	4	50642	
	Harness for number plate	1	243508	America. Dollar area
	Cable clip ($\frac{3}{16}''$ hole) } For number plate harness	4	8885	
	Cable clip ($\frac{1}{4}''$ hole) } For number plate harness	3	50637	
	Drive screw } Fixing clip 8885	3	78006	
	Bolt (2 B.A. x $\frac{1}{2}''$ long) } Fixing clip 8885	1	234603	
	Spring washer } Fixing clip 8885	1	3073	
	Nut (2 B.A.) } Fixing clip 8885	1	2247	
	Cable clip for tail lamp lead	1	8136	
	Dash harness	1	238032	Vehicles numbered 16103899, 16136866, 16163018, 16200001, 16230081, 16260021, 16300005, 16330008, 16360010, 16630079 and 16662023 onwards
	Headlamp, sidelamp and horn harness	1	236042	R.H.D.
	Headlamp, sidelamp and horn harness	1	236043	L.H.D.
	Sheath for side lamp lead	2	233463	
	Frame harness	1	236136	
	Rear cross-member harness	1	236137	
	Trailer plug and lead	1	236138	
	Stop tail leads	2	236139	
	Stop tail leads	2	243507	America.
	Cable for main beam warning light	1	236421	Dollar area
	Extension lead for stop light switch	1	236141	L.H.D.
	Earthing clip on rear cross-member	2	236366	
	Screw (2 B.A. x $\frac{1}{2}''$ long) } Fixing earthing clip to rear cross-member	2	77700	
	Spring washer } Fixing earthing clip to rear cross-member	2	3073	
	Nut (2 B.A.) } Fixing earthing clip to rear cross-member	2	2247	
21	Cable, stop lamp switch	1	219645	††
22	Cable, coil to distributor	1	219648	
23	Cable, battery to earth	1	235716	
	Cable, battery to switch	1	219651	Vehicles numbered 860001 to 8666587
24	Cable, battery to switch	1	231774	Vehicles numbered 8666588 onwards
	Drive screw fixing battery cables	2	50552	
25	Cable, switch to starter	1	216773	
26	Cable, gearbox to earth	1	219649	
27	Leads for wiper motor	1	233533	†
28	Plug socket for leads on steering bracket	1	233531	†
29	Plug for trailer light cable	1	261511	
	Special screw } Fixing plug to bracket on chassis frame	4	77701	Vehicles numbered 860001 to 8666069
	Square nut (4 B.A.) } Fixing plug to bracket on chassis frame	4	70904	
	Screw (5 B.A.) } Fixing plug and retainer plate to chassis frame	4	3279	Vehicles numbered 8666070 onwards
	Nut (5 B.A.) } Fixing plug and retainer plate to chassis frame	4	3280	

* Vehicles numbered 860001 to 06111546, 8670001 to 06200311, 8680001 to 06300030

** Vehicles numbered 06111547, 06200312, 06300031 to 16103898, 16136865, 16163017, 16230080, 16260020, 16300004, 16330007, 16360009, 16630078 and 16662022

† Vehicles numbered 06111547, 06200312 and 06300031 onwards

†† Vehicles numbered 860001 to 16103898, 16136865, 16163017, 16230080, 16260020, 16300004, 16330007, 16360009, 16630078 and 16662022

cardiagn.com

GENERAL ELECTRICAL EQUIPMENT

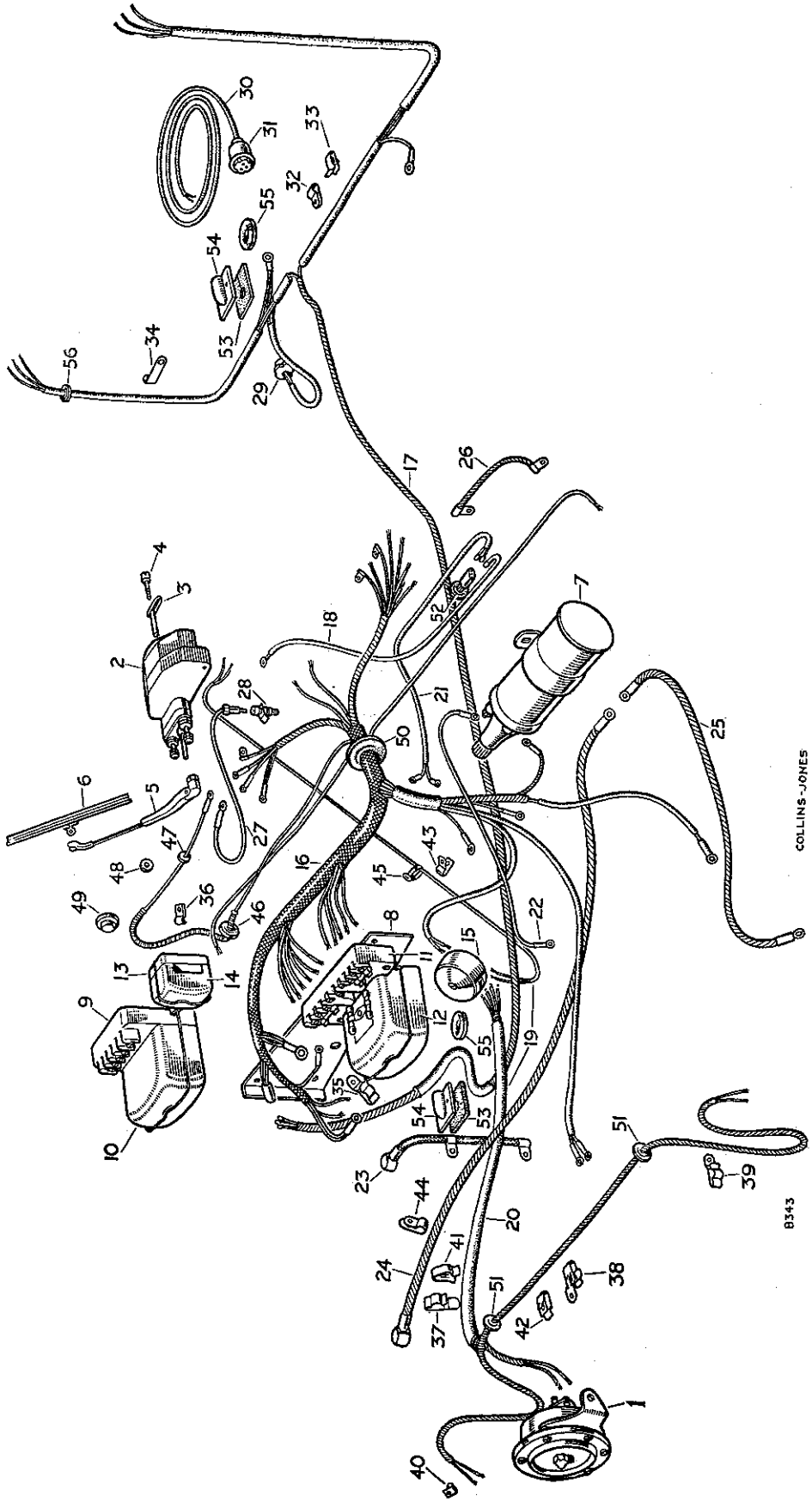

cardiagn.com

GENERAL ELECTRICAL EQUIPMENT

PLATE REF.	1 2 3 4 DESCRIPTION	Qty.	Part No.	REMARKS
30	Socket and cable for trailer light	1	230441	
31	Socket for trailer light cable	1	234117	
	Bolt ($\frac{5}{16}$" x $\frac{11}{16}$" long) } Fixing	1	237158	L.H.D
	Spring washer } battery earth	1	3075	L.H.D.
	Nut ($\frac{5}{16}$") } cable	1	2828	L.H.D.
32	Cable clip for tail lamp lead, on chassis	3	50639	} Alternative type. Check before ordering
	Drive screw fixing clip	3	72626	
33	Clip for tail lamp harness on chassis	3	233770	**
34	Cable clip for tail lamp lead, on body	2	219678	††
	Cable clip for stop lamp cable	1	219676	L.H.D.
35	Cable clip for frame harness, R.H. dash	1	3619	R.H.D.
	Cable clip for frame harness, R.H. dash	1	3618	L.H.D.
	Screw (2 B.A. x $\frac{1}{2}$" long) } Fixing clip to dash	1	71164	L.H.D.
	Spring washer	1	3073	L.H.D.
	Nut (2 B.A.)	1	2247	L.H.D.
36	Cable clip for armoured wiper cable	2	50183	*
	Drive screw fixing clip	2	72626	
37	Cable clip } For headlamp	1	3616	
38	Cable clip } and horn cable	5	3618	
	Screw (2 B.A. x $\frac{1}{2}$" long) } Fixing clips	6	71164	
	Spring washer	6	3073	
	Nut (2 B.A.)	6	2247	
39	Cable clip at L.H. headlamp	1	3619	†
40	Earthing clip for headlamp	1	234523	
41	Cable clip, large } For headlamp and	1	233771	
42	Cable clip, small } horn cable harness	6	233770	
43	Cable clip for horn leads	1	50637	
44	Cable clip at battery box	1	219677	
45	Bowden clip at steering box	1	50647	
	Clip for rear cross-member harness	3	236365	**
	Bowden clip fixing stop light leads	2	41409	
	Bowden clip fixing extension leads	3	41409	L.H.D
	Rubber grommet for frame harness	2	233245	
	Rubber grommet for tail lamp lead	2	233243	
	Rubber plug for tail lamp lead hole	2	301346	America Dollar area. Vehicles numbered 16136866 onwards
	Rubber grommet } For side-	2	233243	**
	Clip } lamp lead	2	233247	
46	Rubber grommet, windscreen lower rail } For wiper	2	219679	*
47	Rubber grommet, in dash } cable	1	70742	
48	Rubber grommet in dash for wiper motor lead	1	233244	†
49	Rubber grommet for wiper feed lead hole	1	301347	
50	Rubber grommet, main harness, in dash	2	219681	
51	Rubber grommet, headlamp cable } At fan	2	219680	R.H.D
	Rubber grommet, headlamp cable } cowl	3	219680	L.H.D.
52	Rubber grommet, chassis side member, R.H.	1	219680	
53	Rubber grommet } For frame	2	77213	} Alternative type, check carefully before ordering
54	Retainer for grommet } harness	2	77212	
	Drive screw fixing retainer } on chassis	4	311483	
55	Rubber grommet for frame harness on chassis	2	233246	
56	Rubber grommet, tail lamp lead	2	22066	

* Vehicles numbered 860001 to 06111546, 8670001 to 06200311, 8680001 to 06300030

** Vehicles numbered 860001 to 16103898, 16136865, 16163017, 16230080, 16260020, 16300004, 16330007, 16360009, 16630078 and 16662022

† Vehicles numbered 06111547, 06200312 and 06300031 onwards

†† Vehicles numbered 16103899, 16136866, 16163018, 16200001, 16230081, 16260021, 16300005, 16330008, 16360010, 16630079 and 16662023 onwards

cardiagn.com

BODY, CAPPINGS AND SOCKETS

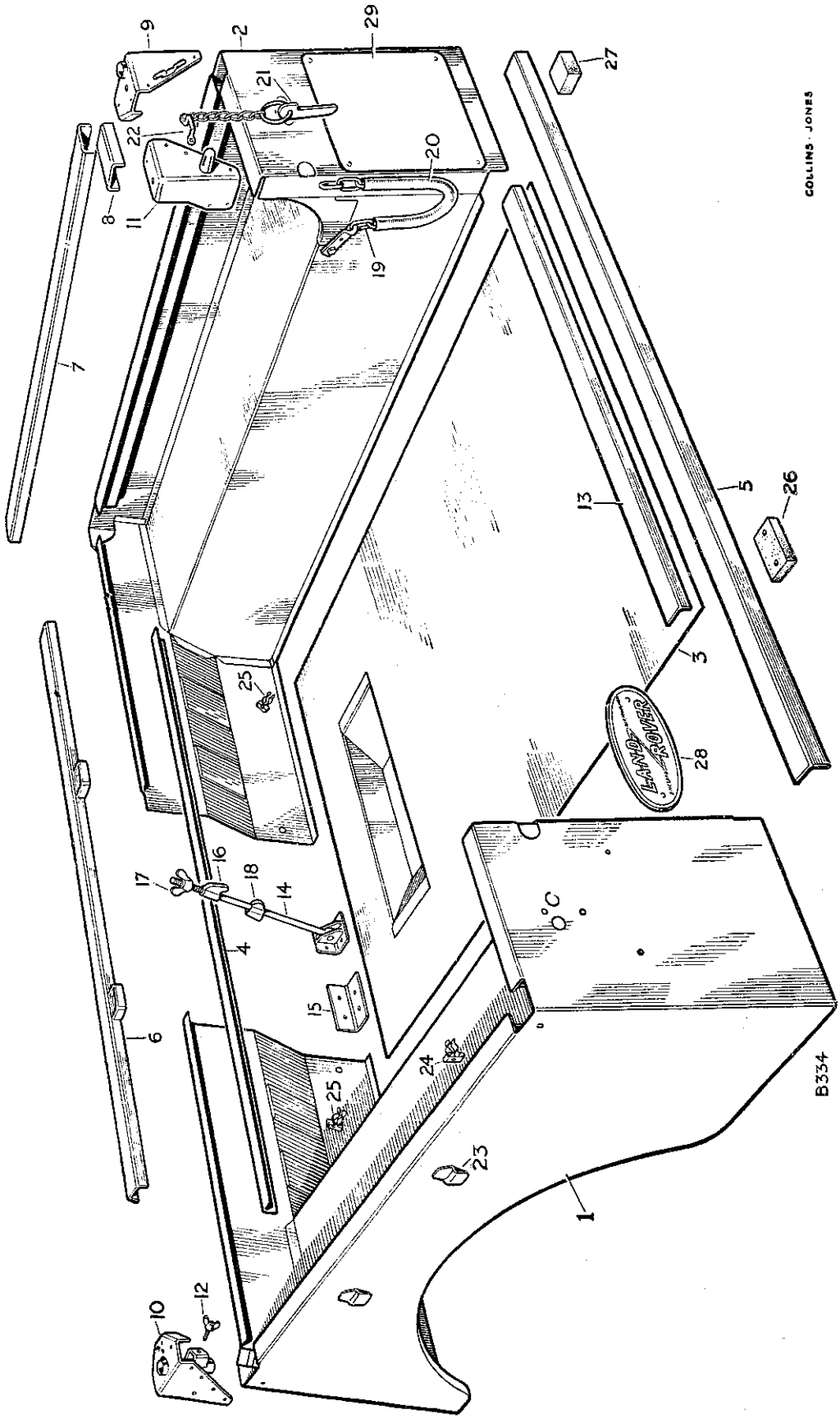

Cardiagn.com

BODY, CAPPINGS AND SOCKETS

PLATE REF. 1 2 3 4	DESCRIPTION	Qty.	Part No.	REMARKS
	BODY FLOOR AND SIDES ASSEMBLY	1	300808	*
	BODY FLOOR AND SIDES ASSEMBLY	1	304035	†
	Side and wheelarch complete L.H.	1	300805	*
1	Side and wheelarch complete L.H.	1	305274	†
	Side and wheelarch complete R.H.	1	300804	*
2	Side and wheelarch complete R.H.	1	305273	†
	Cover plate for tail lamp holes	2	302230	North America only
	Rivet fixing cover plate	4	302222	North America only
3	Rear floor complete	1	300933	
	Stiffener for back rest panel	1	301963	†
4	Stiffener for back rest panel	1	300559	*
5	Angle for rear body mounting	1	301131	
6	Capping for body back rest panel	1	301964	†
	Capping for body back rest panel	1	300865	*
7	Capping for body top, sides	2	300573	
8	Capping for body top, rear end panel	2	300659	
	Rivet — Fixing cappings	42	300784	
	Pop rivet — Fixing cappings	42	300781	
	Hood socket complete, rear corner	2	300574	Vehicles numbered 860001 to 8666000
	Rope cleat	2	300987	Vehicles numbered 860001 to 8666000
	Screw (2 B.A. x ½" long) — Fixing rope cleat	4	77700	Vehicles numbered 860001 to 8666000
	Spring washer — Fixing rope cleat	4	3073	Vehicles numbered 860001 to 8666000
	Nut (2 B.A.) — Fixing rope cleat	4	3823	Vehicles numbered 860001 to 8666000
	Hood socket complete rear corner, L.H.	1	302381	Vehicles numbered 8666001 onwards
9	Hood socket complete rear corner, R.H.	1	301335	Vehicles numbered 8666001 onwards
	Hood socket complete front corner, L.H.	1	301338	Vehicles numbered 860001 to 06110304; 8680001 to 06300030
	Hood socket complete front corner, R.H.	1	301337	Vehicles numbered 860001 to 06110304; 8680001 to 06300030
10	Hood socket complete front corner, L.H.	1	302250	Vehicles numbered 06110305 and 06300031 onwards
	Hood socket complete front corner, R.H.	1	302249	Vehicles numbered 06110305 and 06300031 onwards
	Rivet — Fixing rear sockets	20	300784	
	Pop rivet — Fixing rear sockets	4	300781	
	Rivet, short — Fixing front sockets	2	300783	
	Rivet, long — Fixing front sockets	8	300784	
	Pop rivet — Fixing front sockets	4	300781	
	Corner bracket and tailboard dowel, L.H.	1	300661	
11	Corner bracket and tailboard dowel R.H.	1	300660	
	Rivet, short — Fixing corner brackets	2	300783	
	Rivet, long — Fixing corner brackets	10	300784	
	Pop rivet — Fixing corner brackets	4	300781	
12	Wing bolt for hood socket	4	301267	
	Split pin for wing bolt	4	2388	
13	Protecting strip at rear of floor	1	300825	
	Drive screw fixing strip	14	77707	
14	Clamp for spare wheel	1	300754	
15	Reinforcement bracket for clamp	1	300764	
	Bolt (¼" x ¾" long) — Fixing bracket and clamp to floor and back rest	4	237141	
	Spring washer — Fixing bracket and clamp to floor and back rest	4	3074	
	Nut (¼") — Fixing bracket and clamp to floor and back rest	4	3819	

* Vehicles numbered 860001 to 06110304
8680001 to 06300030
† Vehicles numbered 06110305 and 06300031 onwards

cardiagn.com

BODY, CAPPINGS AND SOCKETS

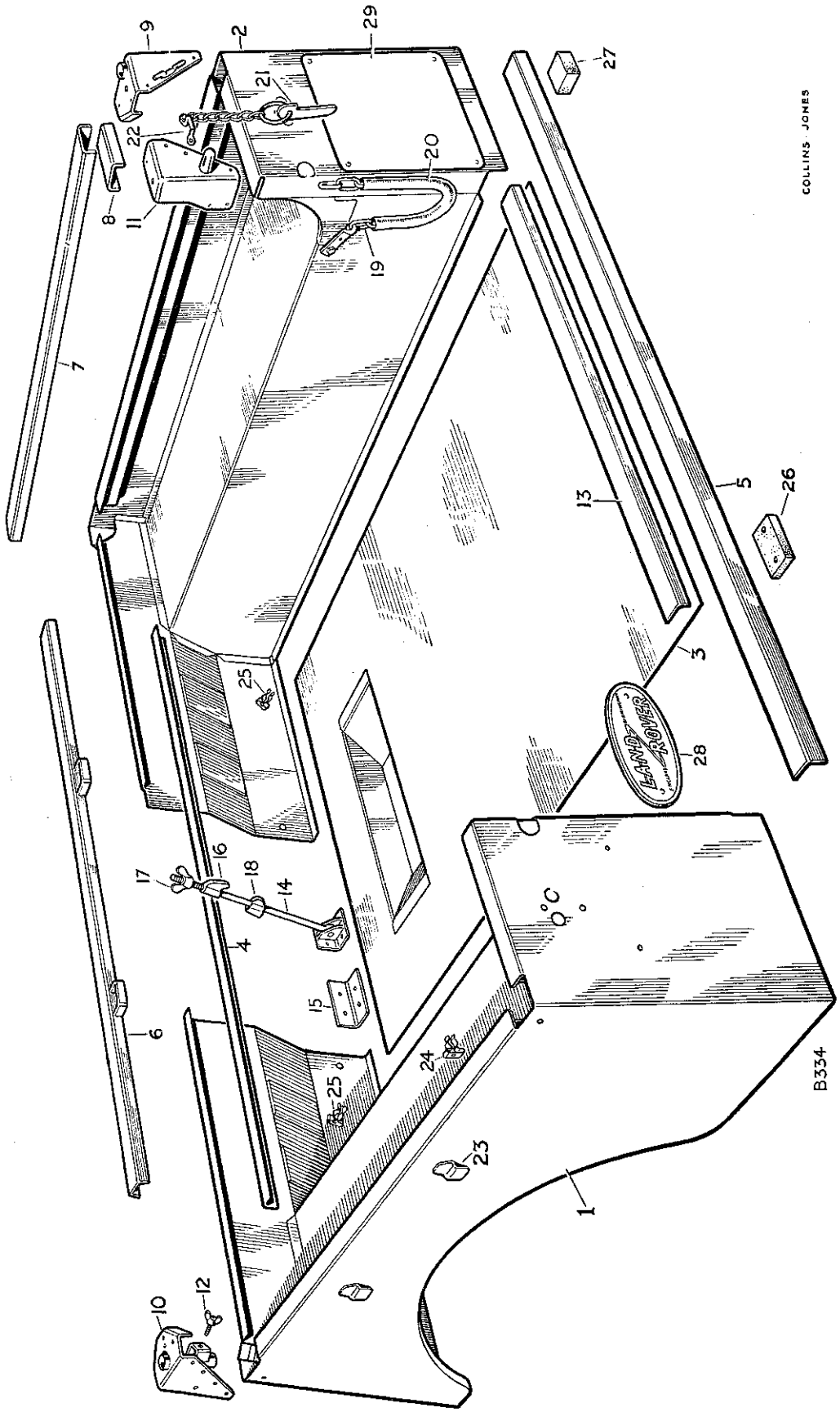

PLATE REF.
16
17
18
19
20
21
22
23
24
25
28
29
cardiagn.com

BODY, CAPPINGS AND SOCKETS

PLATE REF.	1 2 3 4 DESCRIPTION	Qty.	Part No.	REMARKS
16	Hook for spare wheel	1	301930	
17	Wing nut for hook	1	300765	
	Split pin for wing nut	2	2392	
18	Spring clip for spare wheel clamp	1	300766	Vehicles numbered 860001 to 06110304 8680001 to 06300030
	Screw (2 B.A. x $\frac{1}{2}$" long) Fixing spring clip to back rest panel	2	77700	
	Spring washer	2	3073	
	Tapped plate	1	301092	
	Spring clip for spare wheel clamp	1	301985	Vehicles numbered 06110305 and 06300031 onwards
	Screw (2 B.A. x $\frac{3}{8}$" long) Fixing spring clip	6	77846	
	Nut (2 B.A.)	2	2247	
19	Chain for tailboard	2	300837	
20	Sleeve for chain	2	301109	
	Bolt ($\frac{1}{4}$" x $\frac{3}{4}$" long) Fixing chain to wheelarch box	4	237141	
	Spring washer	4	3074	
	Nut ($\frac{1}{4}$")	4	3819	
21	Key and chain for tail board	2	300674	
	Screw (2 B.A. x $\frac{3}{4}$" long) Fixing chain to body	4	77887	
	Spring washer	4	3073	
	Nut (2 B.A.)	4	2247	
22	Staple for hood strap	10	300924	2 off from vehicles numbered 8666001 onwards
23	Retaining plate for hood rope	6	301328	
	Screw (2 B.A. x $\frac{1}{2}$" long)	12	77700	Vehicles numbered 860001 to 8666000
	Spring washer	12	3073	
	Nut (2 B.A.)	12	3823	
24	Clip for jack handle	2	05555	
	Screw (2 B.A. x $\frac{3}{4}$" long) Fixing staples and spring clips to body	4	77861	2 off from vehicles numbered 8666001 onwards
	Screw (2 B.A. x $\frac{1}{2}$" long)	16	77700	
	Spring washer	20	3073	4 off from vehicles numbered 8666001 onwards
	Plain washer	4	3851	
	Nut (2 B.A.)	20	3823	
25	Clip for starting handle	2	05555	
	Screw (2 B.A. x $\frac{1}{2}$" long) Fixing clips to back rest panel	2	77700	
	Spring washer	2	3073	
	Nut (2 B.A.)	2	3823	
	Land-Rover nameplate, small—5$\frac{1}{2}$" overall	1	300999	Alternative type, check before ordering
28	Land-Rover nameplate, large—7$\frac{3}{16}$" overall	1	302361	
	Screw (2 B.A. x $\frac{1}{2}$" long) Fixing nameplate to body	2	77700	
	Nut (2 B.A.)	2	2247	
29	Registration plate	1	230368	
	Bolt ($\frac{5}{16}$" x $\frac{13}{16}$" long) Fixing body to chassis	12	218566	
	Spring washer	12	3075	
	Shim washer	As required	3841	
	Nut ($\frac{5}{16}$")	12	3490	

cardiagn.com

SEAT BASE, SEATS, FRONT FLOOR AND FRONT WINGS

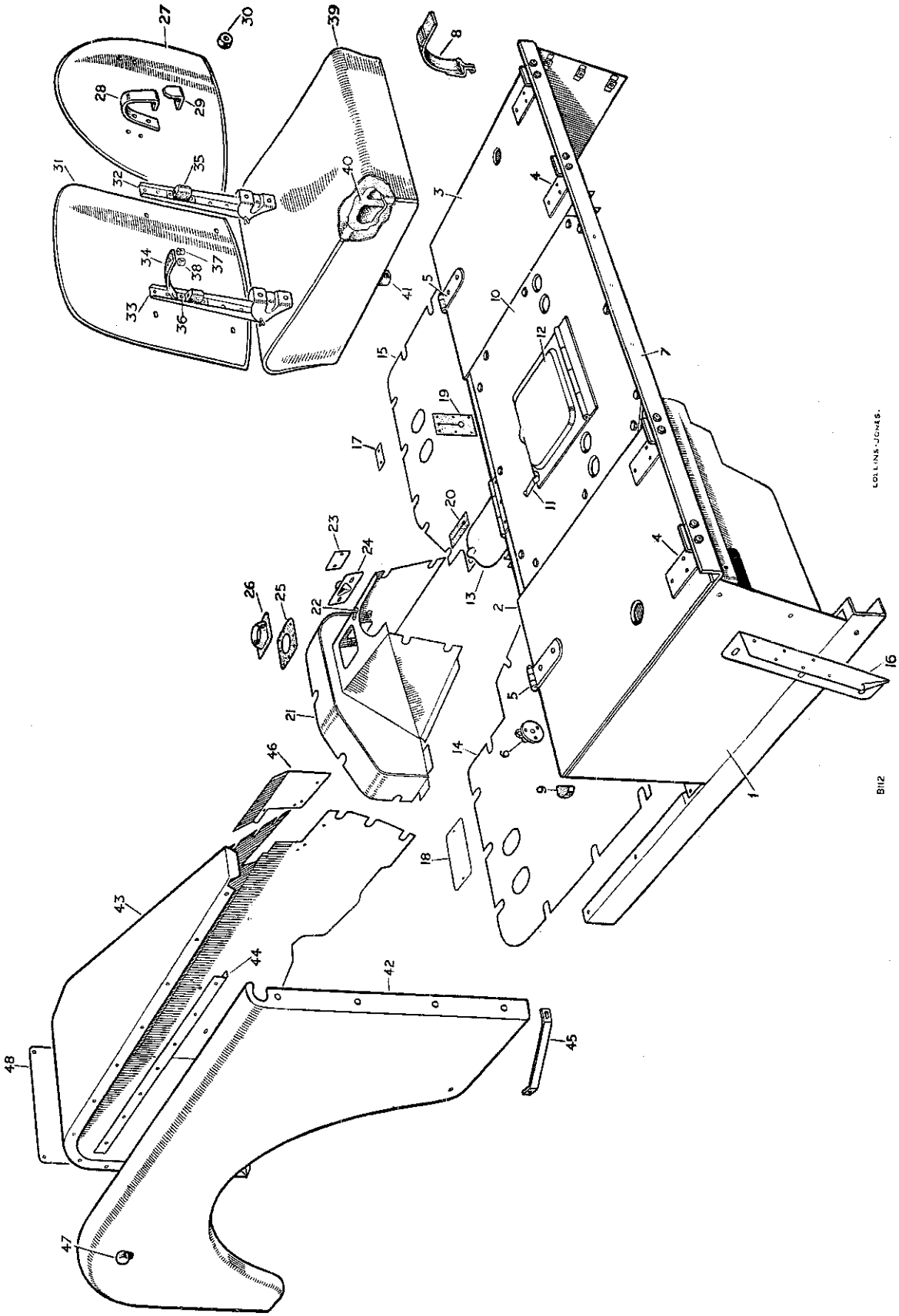

SEAT BASE, SEATS, FRONT FLOOR AND FRONT WINGS

PLATE REF.	1 2 3 4 DESCRIPTION	Qty.	Part No.	REMARKS
	SEAT BASE AND FLOOR ASSEMBLY	1	300912	Vehicles numbered 860001 to 861500
1	SEAT BASE AND FLOOR ASSEMBLY	1	301217	Vehicles numbered 861501 onwards
2	Lid for tool locker	1	300845	
3	Lid for petrol tank	1	301075	
4	Hinge for lids	4	300849	
	Rivet fixing hinges to lids	12	300783	
	Bolt ($\frac{1}{4}$" x $\frac{9}{16}$" long) } Fixing locker lid hinges to back rest	8	237139	
	Spring washer	8	3074	
	Nut ($\frac{1}{4}$")	8	3819	
5	Hasp for locker lids	2	300850	
	Screw ($\frac{1}{4}$" x $\frac{1}{2}$" long) } Fixing hasps to locker lids	2	77833	
	Bolt ($\frac{1}{4}$" x $\frac{9}{16}$" long)	2	237139	
	Spring washer	4	3074	
	Nut ($\frac{1}{4}$")	4	3819	
6	Turnbuckle for locker lids	2	300851	
	Screw (2 B.A. x $\frac{1}{2}$" long) } Fixing turnbuckle to heel board	6	77784	
	Spring washer	6	3073	
	Nut (2 B.A.)	6	3823	
7	Angle plate, body to seat base	1	301153	
	Screw ($\frac{1}{4}$" x $\frac{1}{2}$" long) } Fixing angle to seat base	2	77833	
	Bolt ($\frac{1}{4}$" x $\frac{9}{16}$" long)	2	237139	
	Plain washer	4	2760	
	Spring washer	4	3074	
	Nut ($\frac{1}{4}$")	4	3819	
	Bolt ($\frac{1}{4}$" x $\frac{9}{16}$" long) } Fixing angle to body	5	237139	
	Spring washer	5	3074	
	Nut ($\frac{1}{4}$")	5	3819	
8	Retaining strap for petrol tank lid	1	301261	
	Drive screw } Fixing strap to back rest	1	77704	
	Plain washer	1	3852	
9	Rubber corner piece for locker lids	2	302036	Supplied as extra equipment
	Plain washer } Fixing corner pieces	2	2226	
	Bifurcated rivet	2	77904	
10	Centre cover panel complete	1	301988	
11	Spring clip for P T O selector cover plate	1	301139	
	Rivet } Fixing spring clip	1	300783	
	Washer	1	2869	
12	Cover for P.T.O. knob	1	301957	†
	Set bolt ($\frac{1}{4}$" x $\frac{9}{16}$" long) } Fixing centre panel to seat base	12	237139	Alternative type, check before ordering
	Set screw ($\frac{1}{4}$" x $\frac{5}{8}$" long cone pointed)	3	78097	
	Special bolt	9	301503	
	Plain washer	3	3831	
	Inspection cover for gearbox	1	300897	Vehicles numbered 860001 to 861500
13	Inspection cover for gearbox, hinged } Alternative type	1	301177	Vehicles numbered 861501 onwards
	Inspection cover for gearbox, pronged	1	302460	
	Toe plate L H.	1	300878	Vehicles numbered 860001 to 861500
	Toe plate R H.	1	300875	
14	Toe plate L H.	1	301174	Vehicles numbered 861501 onwards
	Toe plate R H.	1	301170	**
15	Toe plate R.H.	1	301875	†

* Vehicles numbered 860001 to 06103884
8670001 to 06200094
8680001 to 06300021

† Vehicles numbered 06103885 onwards
06200094 onwards
06300022 onwards

** Vehicles numbered 861501 to 06103884
8670001 to 06200094
8680001 to 06300021

cardiagn.com

SEAT BASE, SEATS, FRONT FLOOR AND FRONT WINGS

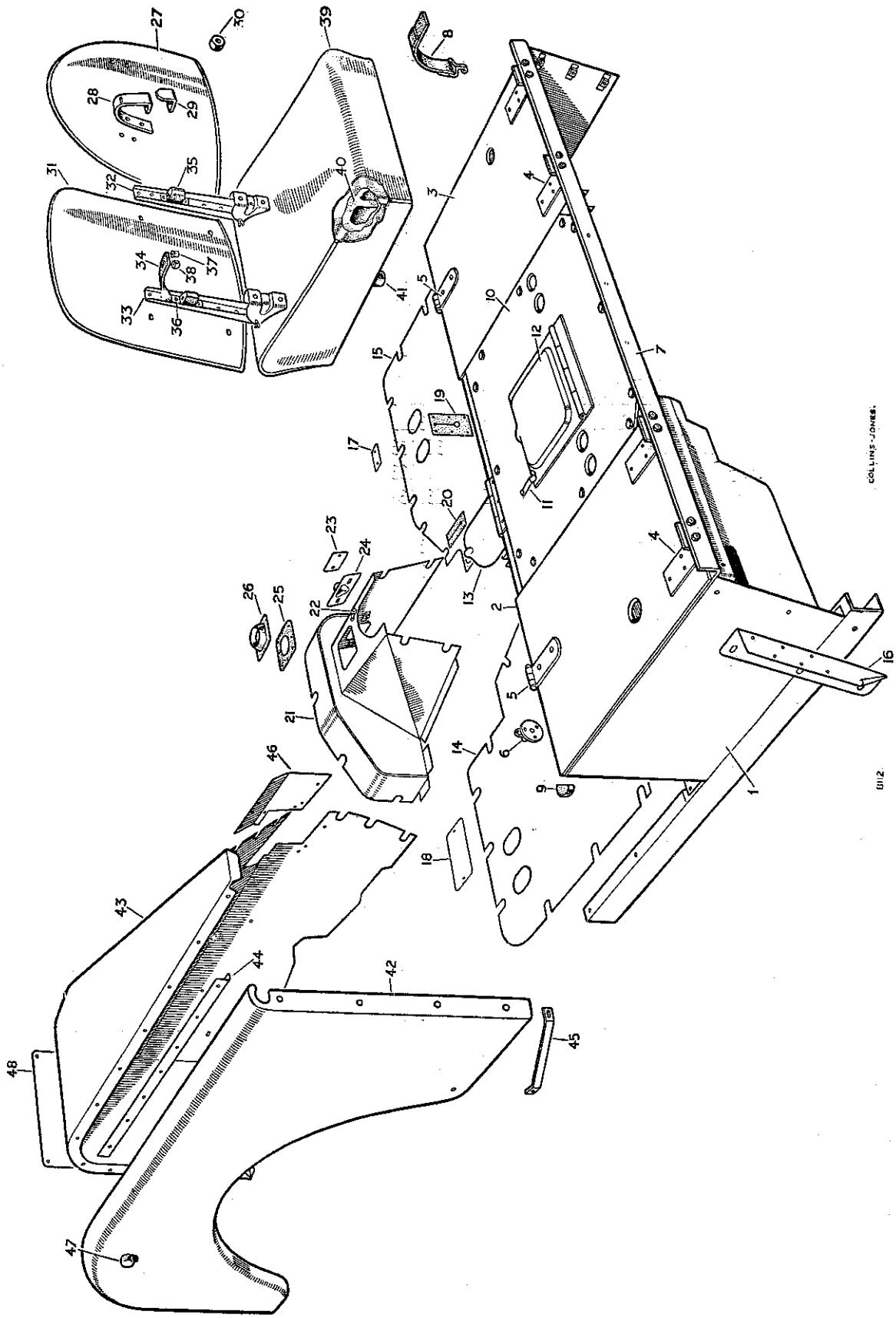

SEAT BASE, SEATS, FRONT FLOOR AND FRONT WINGS

PLATE REF.	1 2 3 4 DESCRIPTION		Qty.	Part No.	REMARKS
	Set bolt ($\frac{1}{4}$" x $\frac{9}{16}$" long)	Fixing	21	237139	
	Spring washer	toe plates to	21	3074	Vehicles numbered 860001 to 861500
	Plain washer	dash and sills	21	3821	
	Set bolt ($\frac{1}{4}$" x $\frac{5}{8}$" long)	Fixing toe plates	29	218552	Vehicles numbered 861501 onwards
	Plain washer	to dash and sills	29	3817	
	Set bolt ($\frac{5}{16}$" x $\frac{11}{16}$" long)	Fixing	2	237163	
	Spring washer	heel board	2	3075	
	Plain washer	to chassis	2	3830	
	Bolt ($\frac{5}{16}$" x 1$\frac{3}{16}$" long)	Fixing	1	214924	
	Spring washer	R.H. sill	1	3075	
	Nut ($\frac{5}{16}$")	to chassis	1	3490	
	Bolt ($\frac{5}{16}$" x $\frac{11}{16}$" long)	Fixing sills	2	214923	
	Spring washer	to bracket	2	3075	
	Nut ($\frac{5}{16}$")	on dash	2	3490	
	Set bolt ($\frac{1}{4}$" x $\frac{9}{16}$" long)		6	237139	
	Spring washer		6	3074	
	Plain washer	Fixing seat base	6	3831	
16	Corner bracket L.H	to body	1	300815	
	Corner bracket R.H		1	300814	
17	Cover plate for pedal adjuster		2	300882	Vehicles numbered 860001 to 860180
	Drive screw fixing cover plate		4	77704	
18	Cover plate for pedal holes		1	300881	
	Drive screw fixing cover plate		4	77704	
19	Rubber cover for hand brake		1	300914	
	Bifurcated rivet	Fixing cover	6	68087	
	Boss cap	to heel board	6	66299	
20	Rubber cover for transfer gear lever		1	301147	
	Bifurcated rivet	Fixing cover	6	68087	
	Boss cap	to floor	6	66299	
	Gearbox cover complete		1	301080	Vehicles numbered 860001 to 861500
	Gearbox cover complete		1	301166	*
21	Gearbox cover complete		1	301876	†
22	Spring clip for cover plate		1	301139	
	Rivet	Fixing	1	300783	
	Washer	spring clip	1	2869	
23	Cover plate for gearbox cover		1	301263	*
	Drive screw fixing cover plate		2	77704	
24	Cover plate for reverse stop		1	301871	†
	Plain washer		2	3821	
	Spring washer	Fixing cover plate	2	3074	
	Set bolt ($\frac{1}{4}$" x $\frac{9}{16}$" long)		2	237139	
25	Rubber seal for gear lever		1	301191	Vehicles numbered 861501 to 06101032
	Bifurcated rivet	Fixing seal	8	68087	
	Boss cap	to cover	8	66299	
26	Rubber seal for gear lever		1	301437	Vehicles numbered 06101033 onwards
	Set bolt ($\frac{1}{4}$" x $\frac{9}{16}$" long)	Fixing gear-	20	237139	Vehicles numbered 860001 to 861500
	Plain washer	box cover	20	3821	

* Vehicles numbered 861501 to 06103884
8670001 to 06200094
8680001 to 06300021

† Vehicles numbered 06103885 onwards
06200091 onwards
06300022 onwards

cardiagn.com

SEAT BASE, SEATS, FRONT FLOOR AND FRONT WINGS

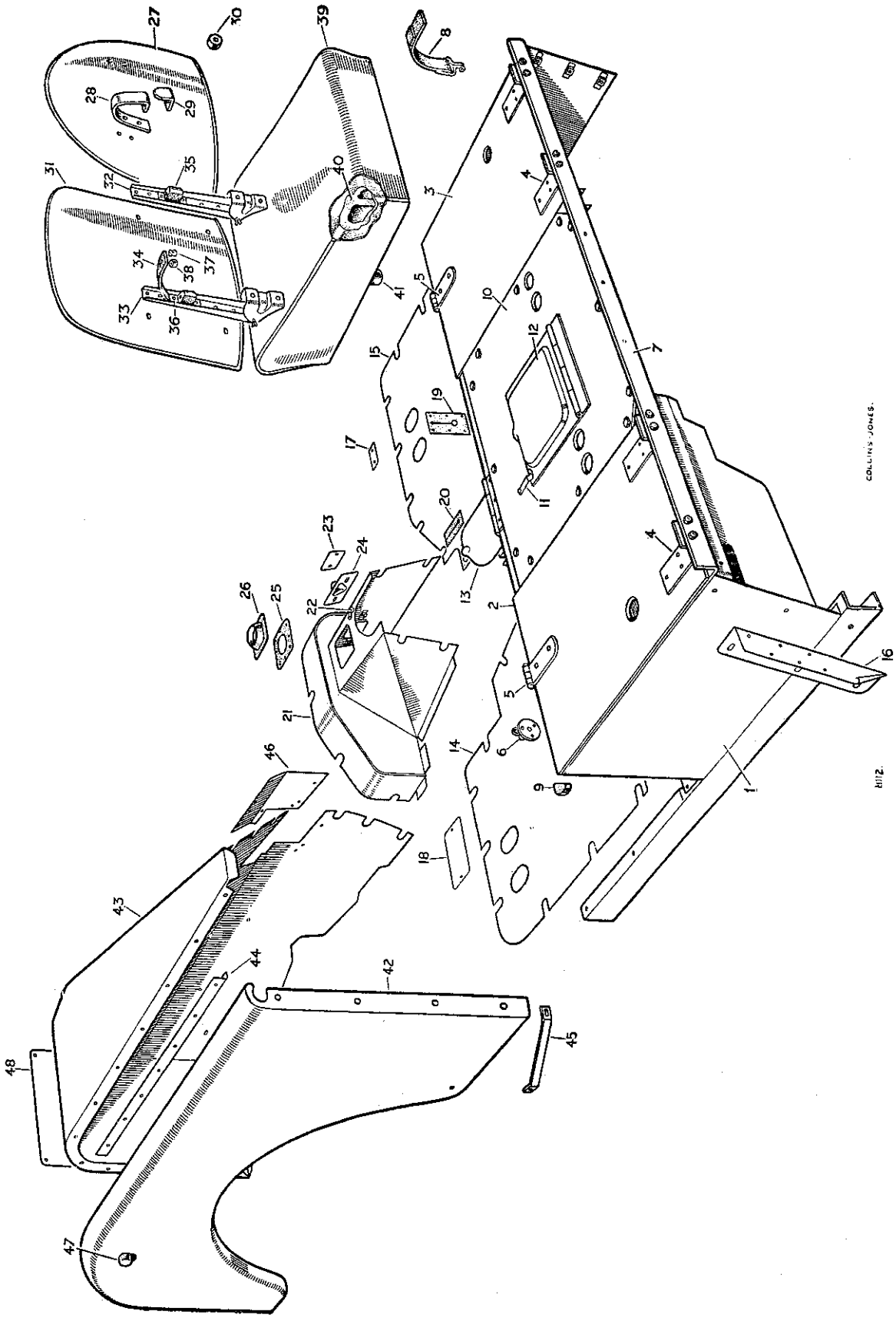

cardiagn.com

SEAT BASE, SEATS, FRONT FLOOR AND FRONT WINGS

PLATE REF.	1 2 3 4 DESCRIPTION	Qty.	Part No.	REMARKS
27	Seat back rest, trimmed	3	301111	
28	Bracket for back rest	6	301201	
29	Reinforcing bracket for back rest	6	301284	
	Bolt ($\frac{5}{16}$" x $\frac{29}{32}$" long) Fixing bracket	6	231647	
	Spring washer to back rest	6	3075	
	Nut ($\frac{5}{16}$") panel	6	3490	
	Set bolt ($\frac{1}{4}$" x $\frac{9}{16}$" long) Fixing back rest	12	237139	
	Spring washer to	12	3074	Vehicles numbered 860001 to 06110304
	Plain washer mounting brackets	12	2760	8680001 to 06300030
30	Rubber buffer for seat back rest	3	76356	
	Screw (2 B.A. x $\frac{3}{4}$" long)	3	71421	
	Spring washer Fixing buffer to	3	3073	
	Plain washer back rest panel	3	2869	
	Nut (2 B A)	3	2247	
31	Seat back rest, trimmed	3	301997	
32	Hinge complete for seat back rest, R.H.	3	301976	
33	Hinge complete for seat back rest, L.H.	3	302181	
34	Retaining strap for seat back rest	3	302180	
	Plain washer Fixing strap	3	3816	
	Rivet to L H hinge	3	300784	
	Spring washer Fixing	12	2284	
	Split pin hinge	6	3892	
35	Rubber buffer	6	301966	
36	Securing plate for buffer	6	301975	
	Rivet fixing plate	9	300789	Vehicles numbered 06110305 and 06300031 onwards
	Set bolt ($\frac{1}{4}$" x $\frac{3}{8}$" long) Fixing hinge to	12	237138	
	Shakeproof washer seat back rest	12	70884	
	Bolt ($\frac{1}{4}$" x $\frac{3}{4}$" long) Fixing	12	237141	
	Spring washer hinge to	12	3074	
	Nut ($\frac{1}{4}$") back rest panel	12	3819	
37	Eyelet For	3	302179	
38	Distance tube retaining Alternative types	3	302304	
	Stud strap	3	302463	
	Screw (2 B.A. x $\frac{3}{4}$" long) Alter- Fixing eyelet	3	77861	
	Screw (2 B.A. x $1\frac{1}{8}$" long) native or distance	3	77845	
	Plain washer tube to back	3	3816	
	Spring washer panel	3	3073	
	Nut (2 B.A.) capping	3	2247	
39	Seat cushion complete	3	304351	
40	Rubber interior for seat	3	300948	
41	Rubber dowel locating seat	6	302363	
	Screw ($\frac{1}{4}$" x 1" long) fixing dowel	6	68845	
42	Front wing side L H	1	307413	*
	Front wing side R H	1	307412	*
	Front wing top and valance L.H	1	300797	Vehicles numbered 860001 to 861500
	Front wing top and valance R H	1	300796	Vehicles numbered 860001 to 861500
43	Front wing top and valance L.H	1	301219	†
	Front wing top and valance R H	1	301218	†
	Front wing top and valance L H	1	302234	North America only up to Vehicle numbered 16136865
	Front wing top and valance R H.	1	302233	North America only up to Vehicle numbered 16136865
44	Seal for wing joint	2	301281	*

* Vehicles numbered 860001 to 16103898, 16136865, 16163017, 16230080 16260020 16300004 16330007, 16360009, 16630078 and 16662022

† Vehicles numbered 861501 to 16103898, 16136865, 16163017, 16230080, 16260020, 16300004, 16330007, 16360009, 16630078 and 16662022

cardiagn.com

SEAT BASE, SEATS, FRONT FLOOR AND FRONT WINGS

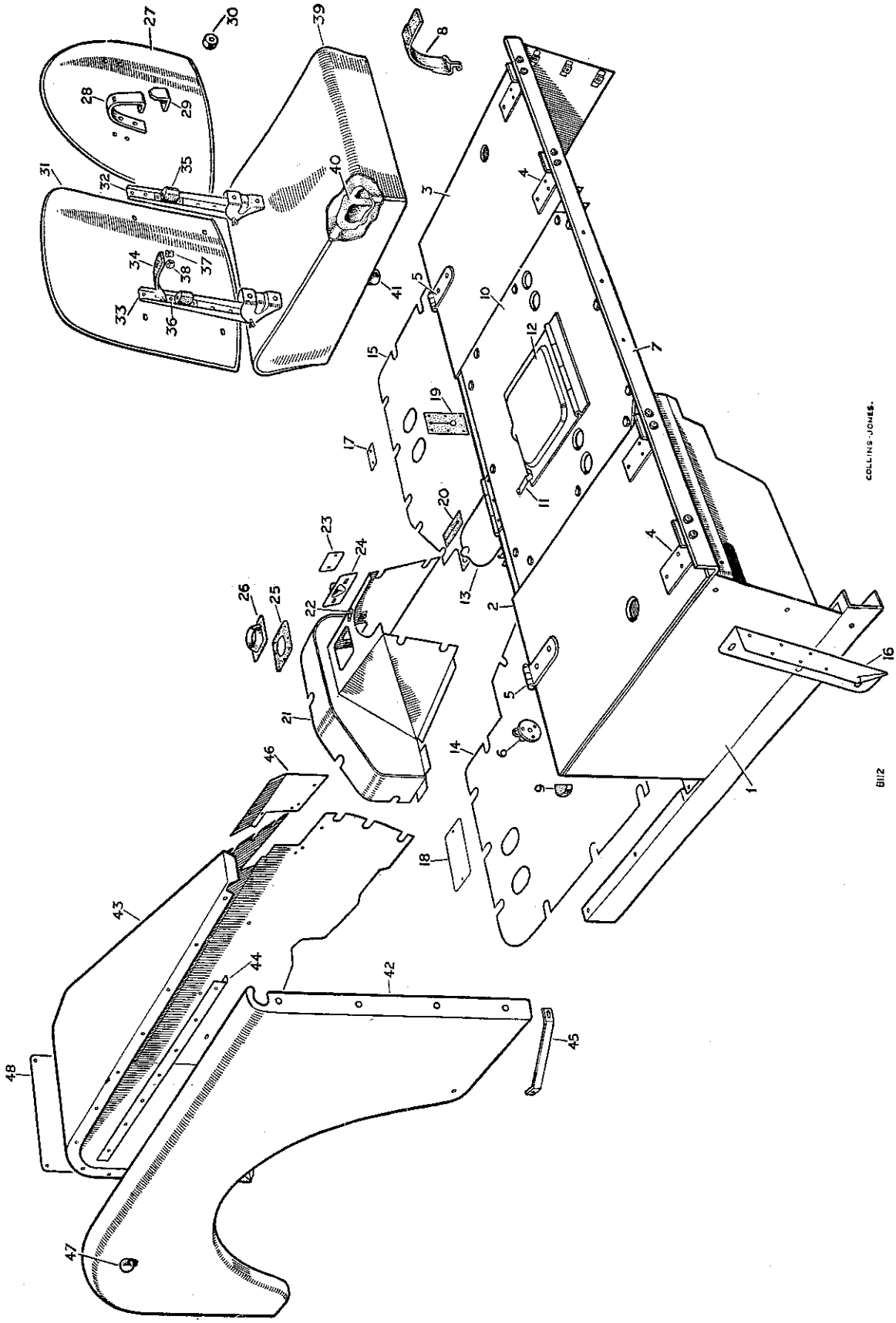

cardiagn.com

SEAT BASE, SEATS, FRONT FLOOR AND FRONT WINGS

PLATE REF. 1 2 3 4	DESCRIPTION	Qty.	Part No.	REMARKS
	Front wing complete R.H.	1	302550	Vehicles numbered 16103899, 16136866, 16163018, 16200001, 16230081, 16260021, 16300005, 16330008, 16360010, 16630079 and 16662023 onwards
	Front wing complete L.H.	1	302551	
	Rubber buffer in wing for door	2	302552	
	Bolt (¼″ x ⅝″ long) — Fixing wing side to wing top	20	218552	
	Plain washer — Fixing wing side to wing top	40	2213	
	Spring washer — Fixing wing side to wing top	20	3074	
	Nut (¼″) — Fixing wing side to wing top	20	3819	
	Set bolt (5/16″ x ⅞″ long) — Fixing wings to scuttle side pillar	8	237161	
	Plain washer — Fixing wings to scuttle side pillar	8	2249	
	Spring washer — Fixing wings to scuttle side pillar	8	3075	
	Bolt (¼″ x ⅝″ long) — Fixing wings to dash and grille frame	18	218552	
	Spring washer — Fixing wings to dash and grille frame	18	3074	
	Plain washer — Fixing wings to dash and grille frame	12	2215	
	Nut (¼″) — Fixing wings to dash and grille frame	18	3819	
45	Stay for front wing	2	301124	
	Screw (2 B.A. x ½″ long) — Fixing stay to wing and dash	4	77700	
	Spring washer — Fixing stay to wing and dash	4	3073	
	Plain washer — Fixing stay to wing and dash	2	2983	
	Nut (2 B.A.) — Fixing stay to wing and dash	4	3823	
46	Cover plate for wing valance L.H.	1	301208	R.H.D. — Vehicles numbered 860181 onwards
	Cover plate for wing valance R.H.	1	301209	R.H.D. — Vehicles numbered 860181 onwards
	Cover plate for wing valance	1	301207	L.H.D. — Vehicles numbered 860181 onwards
	Screw (2 B.A. x ⅜″ long) — Fixing cover plates to valances	8	77846	Vehicles numbered 860181 onwards
	Plain washer, small — Fixing cover plates to valances	4	2260	Vehicles numbered 860181 onwards
	Plain washer, large — Fixing cover plates to valances	4	3008	Vehicles numbered 860181 onwards
	Spring washer — Fixing cover plates to valances	8	3073	Vehicles numbered 860181 onwards
	Nut (2 B.A.) — Fixing cover plates to valances	8	3823	Vehicles numbered 860181 onwards
47	Rubber buffer for door in front wing	2	300962	
48	Registration plate	1	230368	

cardiagn.com

TAILBOARD, DOORS AND SIDE SCREENS

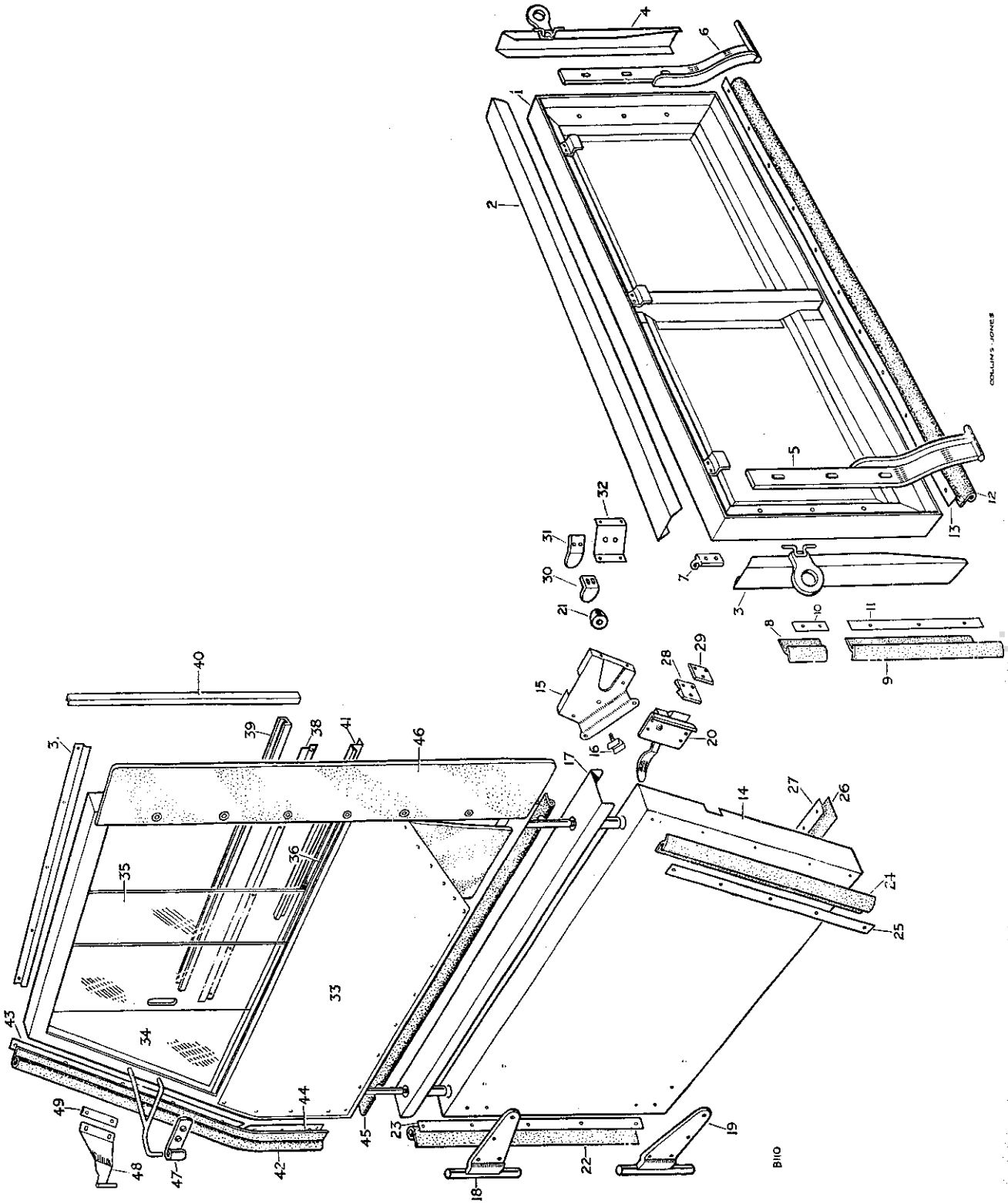

cardiagn.com

TAILBOARD, DOORS AND SIDE SCREENS

PLATE REF.	1 2 3 4 DESCRIPTION	Qty.	Part No.	REMARKS
1	TAILBOARD ASSEMBLY	1	300810	
	TAILBOARD ASSEMBLY	1	302303	
	Mounting bracket for number plate support	1	302240	America Dollar area
	Rivet } Fixing mounting	4	300789	
	Pop rivet } bracket to tailboard	2	300919	
	Tailboard complete, less hinges	1	262215	
2	Top capping for tailboard	1	300588	
3	Side capping for tailboard L.H.	1	300970	
4	Side capping for tailboard R.H.	1	300969	
	Rivet }	16	300783	
	Pop rivet, short } Fixing cappings	20	300919	
	Pop rivet, long }	4	300781	
5	Hinge for tailboard L.H.	1	302034	
6	Hinge for tailboard R.H.	1	302032	
	Spring washer }	1	2288	
	Plain washer } Retaining tailboard hinge	1	3895	
	Split pin }	1	3896	
	Set bolt ($\frac{1}{4}''$ x $\frac{3}{4}''$ long) } Fixing	6	237141	
	Plain washer } hinge to	6	3817	
	Spring washer } tailboard	6	3074	
7	Hook for tailboard chain	2	300838	
	Bolt ($\frac{1}{4}''$ x $\frac{3}{4}''$ long) } Fixing	4	237141	
	Spring washer } chain to	4	3074	
	Nut ($\frac{1}{4}''$) } tailboard	4	3819	
8	Weather strip, upper } For tail-	2	301432	
9	Weather strip, lower } board side	2	301416	
	Retainer, upper, R.H. }	1	301870	
10	Retainer, upper, L.H. } For side weather	1	301418	
	Retainer, lower, R.H. } strip	1	301419	
11	Retainer, lower, L.H. }	1	301420	
	Pop rivet, short } Fixing side retainers	10	300781	
	Pop rivet, long } to tailboard	2	300782	
12	Weather strip for tailboard bottom	1	301421	
13	Retainer for bottom strip	1	301422	
	Rivet fixing bottom retainer	12	300789	
14	FRONT DOOR ASSEMBLY L.H.	1	301270	
	FRONT DOOR ASSEMBLY R.H.	1	301269	
	DOOR CORNER GUSSET PLATE ASSEMBLY L.H.	1	302335	
	DOOR CORNER GUSSET PLATE ASSEMBLY R.H.	1	302334	
15	Door corner gusset plate L.H.	1	302328	
	Door corner gusset plate R.H.	1	302327	
	Bolt and plate complete	2	302332	Alternative, check before ordering
16	Bolt ($\frac{1}{4}''$ x $\frac{13}{16}''$ long)	2	218565	Alternative, check before ordering
	Spring washer }	2	3074	
	Plain washer } Fixing bolt and plate	2	3912	
	Nut ($\frac{1}{4}''$) }	2	3819	

cardiagn.com

TAILBOARD, DOORS AND SIDE SCREENS

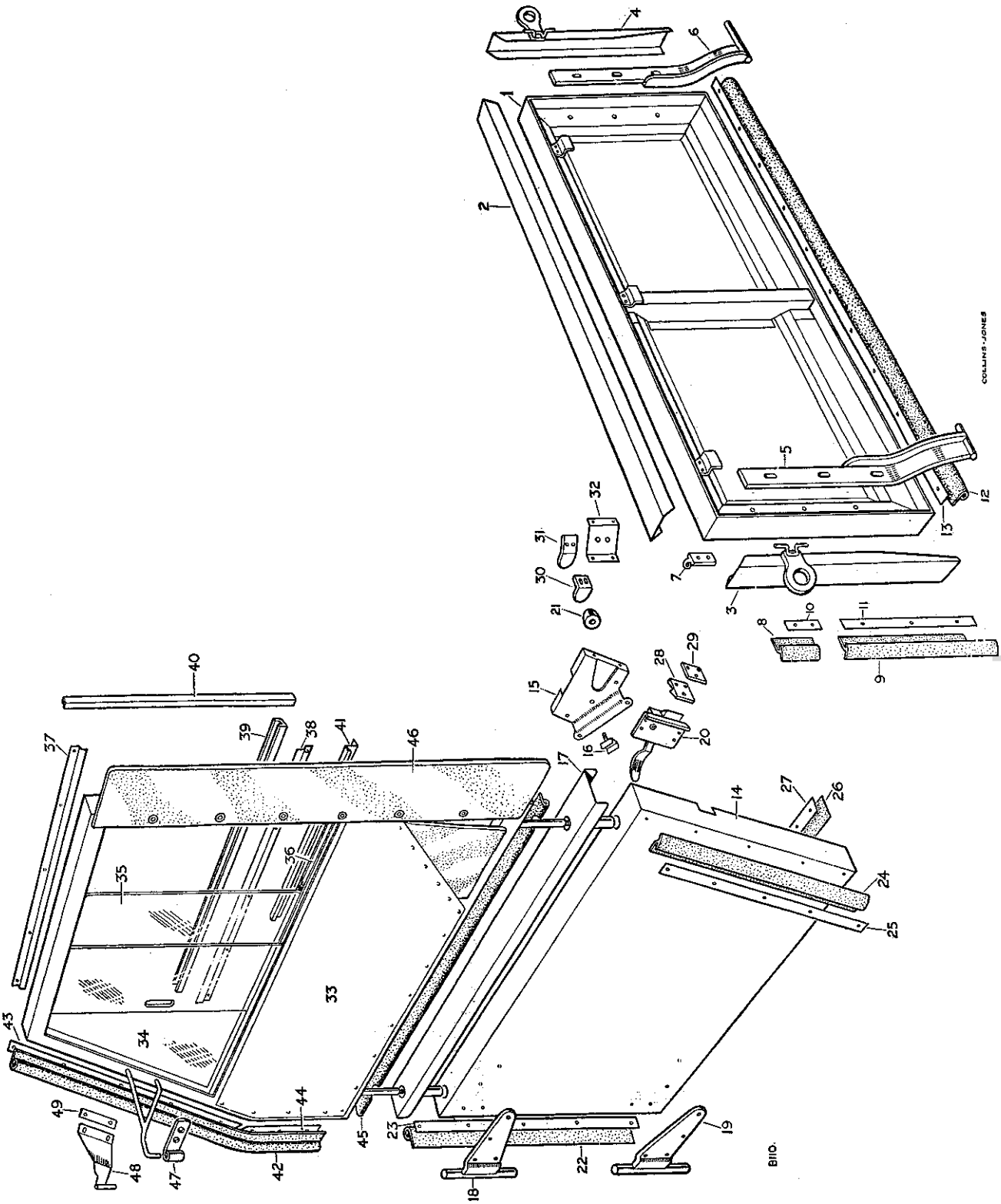

caradagn.com

TAILBOARD, DOORS AND SIDE SCREENS

PLATE REF.	1 2 3 4 DESCRIPTION		Qty.	Part No.	REMARKS
	Pop rivet	Fixing gusset plate to door	4	300919	
	Screw (2 B.A. x ½″ long)		4	77869	
	Spring washer		4	3073	
	Nut (2 B.A.)		4	3823	
	Special bolt		4	301502	
	Spring washer		4	3074	
	Nut (¼″)		4	3819	
17	Top capping for foor L.H.		1	300917	
	Top capping for door R.H.		1	300916	
	Rivet	Fixing cappings	20	300783	
	Pop rivet		20	300919	
18	Hinge complete, R.H. upper and L.H. lower		2	300630	
19	Hinge complete, L.H. upper and R.H. lower		2	300631	
	Bolt (¼″ x ¾″ long)	Fixing hinges to doors	16	237141	
	Plain washer		4	2760	
	Spring washer		16	3074	
	Nut (¼″)		16	3819	
20	Door lock complete L.H.		1	307976	
	Door lock complete R.H.		1	307975	
	Set screw (2 B.A. x ½″ long)	Fixing door locks	8	77700	
	Spring washer		8	3073	
21	Rubber buffer for doors		4	301141	
	Plain washer	Fixing rubber buffer	4	2869	
	Drive screw		4	64355	
22	Weather strip for door, front		2	301407	
23	Retainer for front weather strip		2	301409	
	Rivet fixing front retainer		14	300789	
24	Weather strip for door, rear		2	301411	
	Retainer R.H.	For rear weather strip	1	302554	
25	Retainer L.H.		1	302555	
	Pop rivet fixing rear retainers		12	300781	
26	Weather strip for door, bottom		2	301893	
27	Retainer for bottom weather strip		2	301415	
	Rivet fixing bottom retainer		18	300789	
28	Striking plate for door		2	300975	
	Screw (2 B.A. x ½″ long)	Fixing striking plate to body	6	77784	
	Spring washer		6	3073	Vehicles numbered 860001 to 06110304, 8680001 to 06300030
	Nut (2 B.A.)		6	3823	
29	Tapped plate		2	301967	Vehicles numbered 06110305 and 06300031 onwards
30	Stop for door buffer		2	301140	Vehicles numbered 860001 to 06110304, 8680001 to 06300030
	Stop for door buffer		2	302245	Vehicles numbered 06110305 to 06114760
31	Stop for door buffer		2	301965	Vehicles numbered 06114761 and 06300031 onwards
	Bolt (¼″ x ⅝″ long)	Fixing stop to corner bracket	4	218552	
	Plain washer		4	3842	
	Spring washer		4	3074	
	Nut (¼″)		4	3819	
32	Reinforcement plate L.H.	For door stop plate	1	302248	Vehicles numbered 06110305 to 06114760
	Reinforcement plate R.H.		1	302247	
	Rivet fixing plate		4	300789	

cardiagn.com

TAILBOARD, DOORS AND SIDE SCREENS

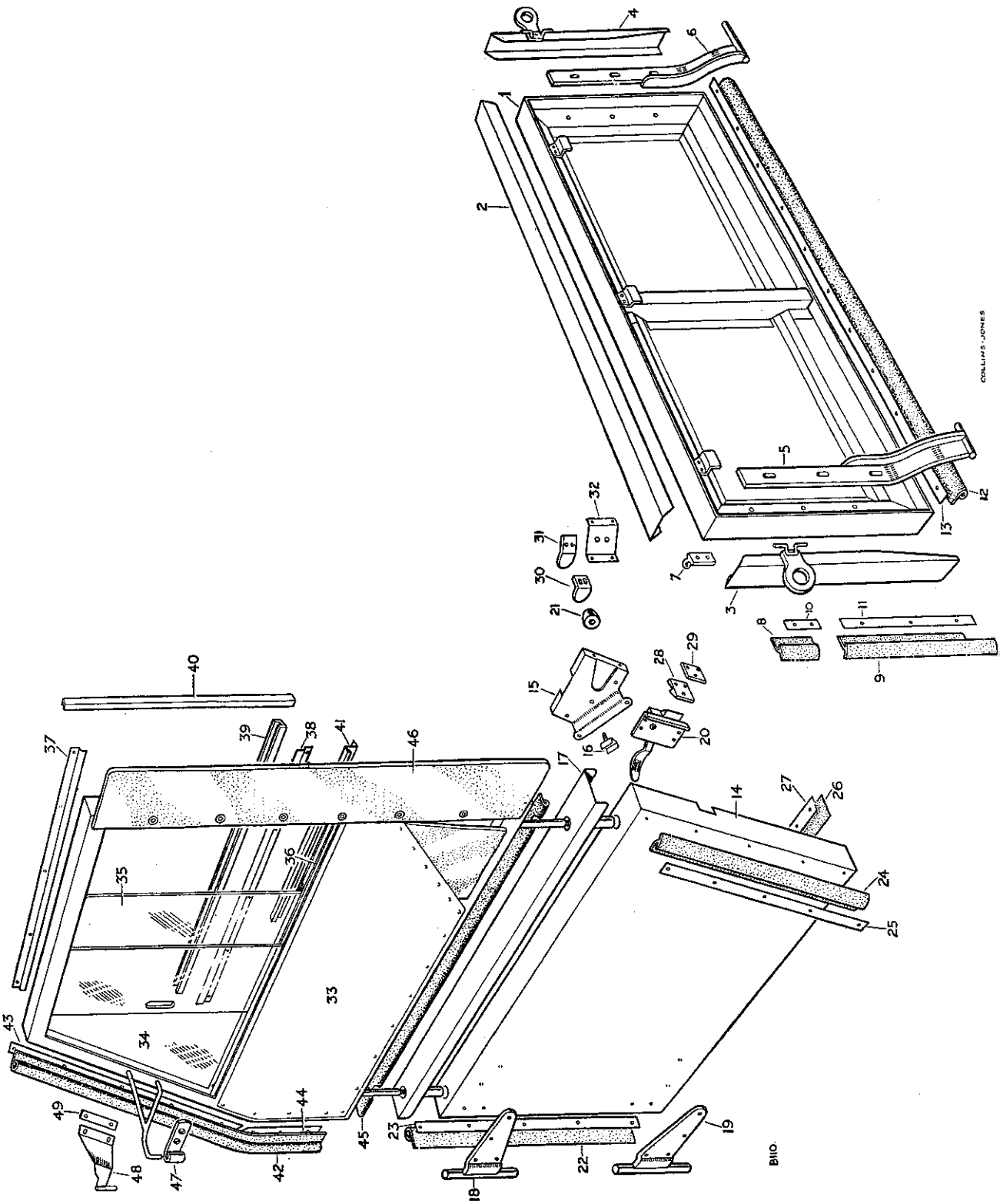

cardiagn.com

TAILBOARD, DOORS AND SIDE SCREENS

PLATE REF.	1 2 3 4 DESCRIPTION	Qty.	Part No.	REMARKS
33	SIDE SCREEN ASSEMBLY L.H.	1	301086	
	SIDE SCREEN ASSEMBLY R.H.	1	301085	
34	Fixed window, front	2	302619	
35	Sliding window, rear	2	300940	
	Channel for windows, top	2	300995	Vehicles numbered 860001 to 8666249
36	Channel for windows, bottom	2	300996	
	Filler for fixed window	4	300938	
37	Retainer for channel, top	2	300993	
38	Retainer for channel, bottom	2	300994	
	Drive screw fixing channel	20	77707	
	Channel for windows, top	2	301286	Vehicles numbered 8666250 onwards
39	Channel for windows, bottom	2	301287	
40	Channel for windows, rear	2	301285	
41	Filler for fixed window	2	301288	
	Drive screw fixing filler	6	77707	
	Drive screw fixing retainers	22	77789	
42	Rubber draught strip, front edge	2	301157	
43	Retainer, upper L.H. (For draught strip)	1	301160	
	Retainer, upper R.H. (For draught strip)	1	301159	
44	Retainer, lower L.H. (For draught strip)	1	301162	
	Retainer, lower R.H. (For draught strip)	1	301161	
	Drive screw fixing retainers and strip	20	77704	
45	Draught strip, lower edge	2	301158	
	Plain washer (Fixing draught strip)	22	2869	Vehicles numbered 860001 to 862500
	Drive screw (Fixing draught strip)	22	77704	
	Spring clip fixing draught strip	18	73037	Vehicles numbered 862501 onwards
46	Rear flap for side curtain L.H.	1	301096	
	Rear flap for side curtain R.H.	1	301097	
	Rivet fixing flap	16	300781	
	Hand flap L.H.	1	301093	
	Hand flap R.H.	1	301094	
47	Hinge for side screen	2	300984	
	Set bolt ($\frac{1}{4}$" x $\frac{21}{32}$" long) (Fixing hinge to windscreen)	2	218552	
	Bolt ($\frac{1}{4}$" x $\frac{13}{16}$" long) (Fixing hinge to windscreen)	2	218565	
	Plain washer (Fixing hinge to windscreen)	4	3840	
	Shakeproof washer (Fixing hinge to windscreen)	4	70884	
	Nut ($\frac{1}{4}$") (Fixing hinge to windscreen)	2	3819	
	Plain washer (Fixing side screen to door)	4	3843	
	Nut ($\frac{7}{16}$") (Fixing side screen to door)	4	3844	
48	Hinge plate, L.H. (For side screen hinge)	1	301917	Vehicles numbered 860001 to 16103310, 16135970, 16162550, 16300003, 16330006, 16360008, 16630077 and 16661973
	Hinge plate, R.H. (For side screen hinge)	1	301916	
49	Back plate (For side screen hinge)	2	301918	
	Bolt ($\frac{1}{4}$" x $1\frac{3}{4}$" long) (Fixing hinge plates to side screens)	4	215064	
	Spring washer (Fixing hinge plates to side screens)	4	3074	
	Nut ($\frac{1}{4}$") (Fixing hinge plates to side screens)	4	2823	
	Hinge plate, L.H. (For side screen)	1	304101	Vehicles numbered 16103311, 16135971, 16162551, 16300004, 16330007, 16360009, 16630078 and 16661974 onwards
	Hinge plate, R.H. (For side screen)	1	304100	
	Bolt ($\frac{1}{4}$" x $\frac{3}{4}$" long) (Fixing hinge plate)	4	237141	
	Plain washer (Fixing hinge plate)	4	3821	
	Spring washer (Fixing hinge plate)	4	3074	
	Nut ($\frac{1}{4}$") (Fixing hinge plate)	4	3819	

cardiagn.com

DASH, WINDSCREEN AND BONNET

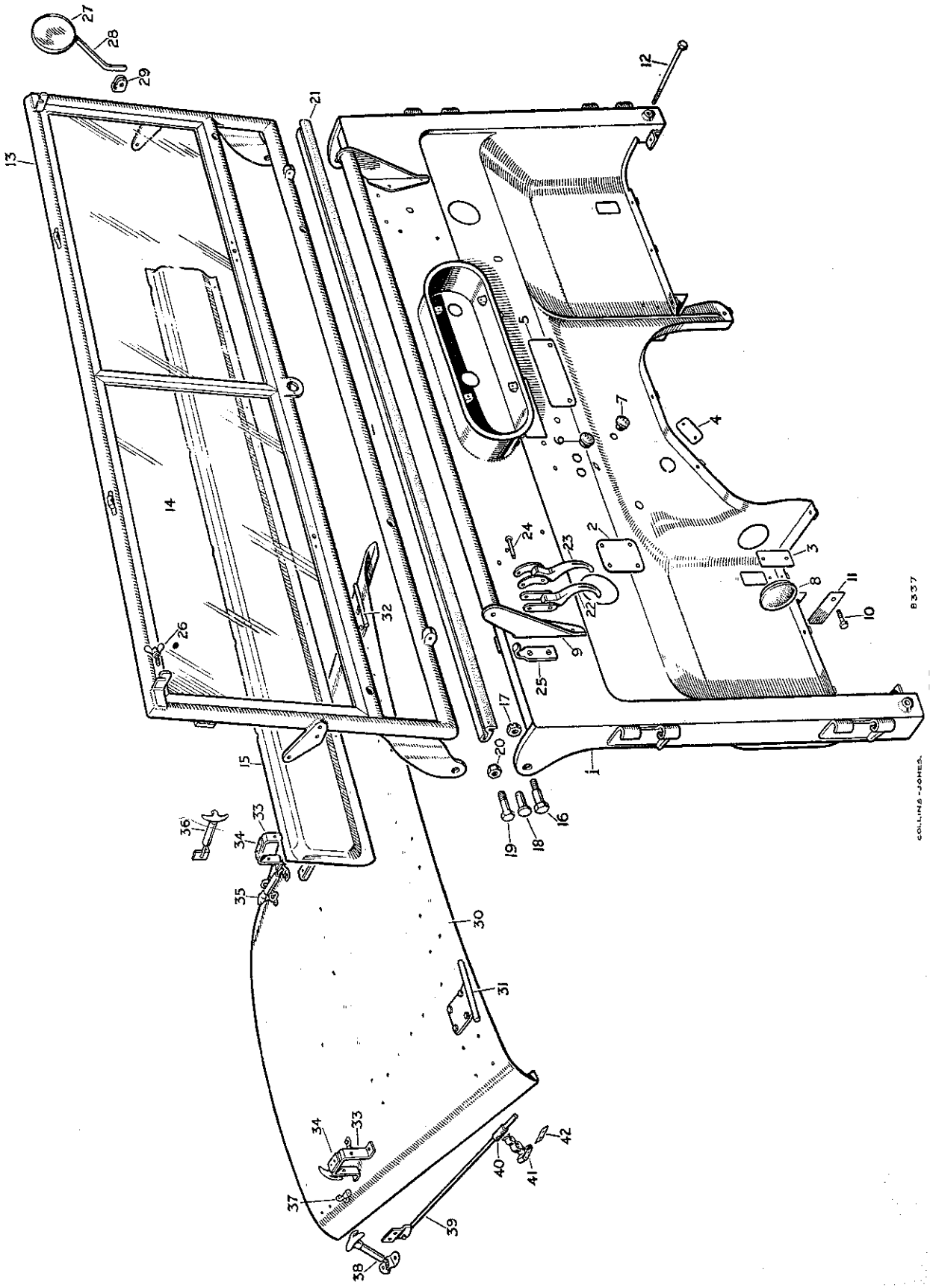

cardiagn.com

DASH, WINDSCREEN AND BONNET

PLATE REF.	1 2 3 4 DESCRIPTION	Qty.	Part No.	REMARKS
	Dash complete	1	300767	Vehicles numbered 860001 to 861500
1	Dash complete	1	301061	**
	Dash complete	1	302534	††
2	Cover panel for steering cutout	1	300918	
3	Cover plate for accelerator pedal hole	1	300901	
	Bolt (¼″ x 9/16″ long) } Fixing	2	237139	
	Spring washer } cover plate	2	3074	
	Nut (¼″) } to dash	2	3819	
4	Access plate for bottom rocker shaft	1	301091	
	Drive screw fixing plate	2	74133	
5	Cover panel for governor cutout in dash	1	301148	
	Bolt (¼″ x 9/16″ long) } Fixing cover panel	2	237139	
	Spring washer	2	3074	
	Nut (¼″)	2	2823	
	Cover for sidelamp hole	2	302242	America Dollar area.
	Drive screw fixing cover to dash	4	77789	Up to Vehicle numbered 16136865
6	Rubber plug, large } For holes	2	301346	
7	Rubber plug, small } in dash	4	301347	
8	Rubber plug for starter housing bolt hole	1	301389	
	Rubber plug, redundant accelerator bracket hole	2	307220	L.H.D.
9	Hand rail complete	1	301253	
	Set bolt (¼″ x 9/16″ long) } Fixing rail	2	237139	
	Spring washer } to dash	2	3074	
10	Bolt (⅜″ x 4″ long) }	4	215301	
11	Spacer	2	301282	
	Plain washer } Fixing dash to chassis at	2	3680	
	Spring washer } reinforcement brackets	4	3076	
	Nut (⅜″)	4	3485	
12	Tie bolt (½″ x 8⅛″ long) }	2	300827	
	Plain washer } Fixing dash to chassis	4	3829	
	Nut (½″)	4	3828	
	Windscreen complete assembly	1	300794	
	Windscreen complete assembly	1	302584	America Dollar area
13	Windscreen, less bottom panel	1	301872	
	Windscreen, less bottom panel	1	301922	America Dollar area
14	Glass for windscreen	2	300583	
	Glass for windscreen	2	301403	America Dollar area
	Glazing strip for glass	2	261618	
15	Bottom panel for windscreen	1	300566	
	Drive screw } Fixing	7	69310	
	Pop rivet } bottom panel	19	300781	
16	Special pivot bolt }	2	300896 }	
	Plain washer } Fixing windscreen	4	3829 } *	
17	Castle nut (⅜″) } to dash	2	3832 }	
	Split pin	2	3849 }	
18	Pivot pin } Fixing windscreen	2	302042 }	
	Split pin } to dash	2	3894 } †	
19	Special bolt (½″ x 1½″ long) } Fixing windscreen	2	234829 }	Vehicles numbered 06115323 and 06300031
20	Special self-locking nut } to dash	2	234824 }	onwards
	Rubber sealing strip for windscreen	1	300565	Vehicles numbered 860001 to 861500
21	Rubber sealing strip for windscreen	1	302300	Vehicles numbered 861501 onwards
	Plain washer } Fixing strip to	5	2869	
	Drive screw } windscreen	5	77704	

* Vehicles numbered 860001 to 06110748, 8680001 to 06300030

** Vehicles numbered 861501 to 16103898, 16136865, 16163017, 16230080, 16260020, 16300004, 16330007, 16360009, 16630078 and 16662022

† Vehicles numbered 06110749 and 06300031 onwards

** Vehicles numbered 16103899, 16136866, 16163018, 16200001, 16230081, 16260021, 16300005, 16330008, 16360010, 16630079 and 16662023 onwards

cardiagn.com

DASH, WINDSCREEN AND BONNET

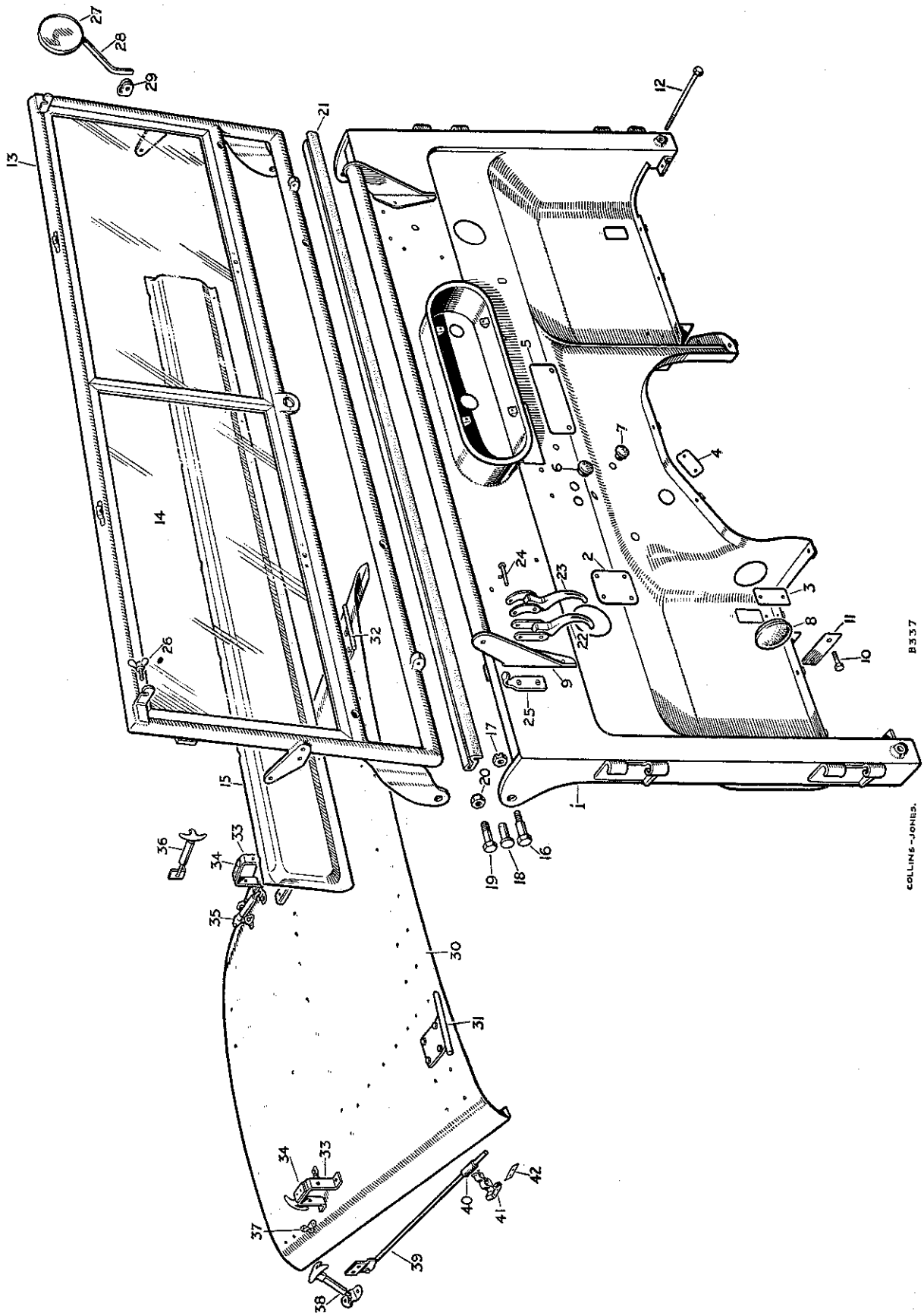

DASH, WINDSCREEN AND BONNET

PLATE REF.	1 2 3 4 DESCRIPTION	Qty.	Part No.	REMARKS
23	Fastener for windscreen	2	302337	
24	Joint pin } Fixing	2	300844	
	Plain washer } fastener to	4	3816	
	Split pin } windscreen frame	2	2388	
25	Catch for windscreen fastener	2	300611	**
	Catch for windscreen fastener	2	302338	††
	Set bolt (1/4" x 3/4" long) } Fixing	2	77697	
	Set screw (1/4" x 3/4" long) } catch to	2	77698	
	Spring washer } dash	2	3074	
26	Wing bolt } In top of windscreen	2	300690	
	Split pin } for hood fixing	2	2388	
	Licence holder	1	26470	
	Mirror complete	1	218132	
27	Mirror only	1	230674	
29	Clip and arm for mirror	1	262679	
	Bolt (5/16" x 1 5/16" long) }	1	230468	Vehicles numbered 860001 to 16103898, 16136865, 16163017, 16230080, 16260020, 16300004, 16330007, 16360009, 16630078 and 16662022
	Plain washer } Fixing mirror	1	3830	
	Shakeproof washer } to windscreen	1	70822	
	Nut (5/16") }	1	3490	
	Mirror complete	1	272244	
	Mirror only	1	279880	
	Arm for mirror	1	262658	Vehicles numbered 16103899, 16136866, 16163018, 16200001, 16230081, 16260021, 16300005, 16330008, 16360010, 16630079 and 16662023 onwards
	Plain washer, small } Fixing	1	2219	
	Plain washer, large } arm to	1	2851	
	Nut (3/8") } front wing	2	2827	
	BONNET ASSEMBLY	1	300809	
30	Bonnet top panel	1	300734	
31	Hinge for bonnet L.H.	1	300743	
32	Hinge for bonnet R.H.	1	300742	
	Bolt (1/4" x 3/4" long) } Fixing	8	237141	
	Spring washer } hinges to	8	3074	
	Nut (1/4") } bonnet panel	8	3819	
33	Support for windscreen	2	302325	
34	Tape for windscreen support	2	70916	
	Bifurcated rivets fixing tape	4	68087	
	Socket for bonnet prop rod	1	302440	
	Bolt (1/4" x 13/16" long) }	4	218565	
	Plain washer } Fixing supports and	2	2552	
	Spring washer } socket to bonnet top	4	3074	
	Nut (1/4") }	4	3819	
35	Fastener for windscreen	2	300692	
	Bolt (1/4" x 5/8" long) }	4	218552	
	Plain washer } Fixing fasteners	4	2215	*
	Spring washer } to bonnet top	4	3074	
	Nut (1/4") }	4	3819	

† Vehicles numbered 860001 to 16101482, 16132862, 16161317
8680001 to 16300003, 16330003, 16360007
16630001 to 16630042, 16660001 to 16661422

** Vehicles numbered 860001 to 16101419, 16132793, 16161309
8680001 to 16300003, 16330003, 16360007
16630001 to 16630042 and 16660001 to 16661506

†† Vehicles numbered 16101420, 16132794, 16161310, 16300004, 16330004, 16360008, 16630043 and 16661507 onwards

cardiagn.com

DASH, WINDSCREEN AND BONNET

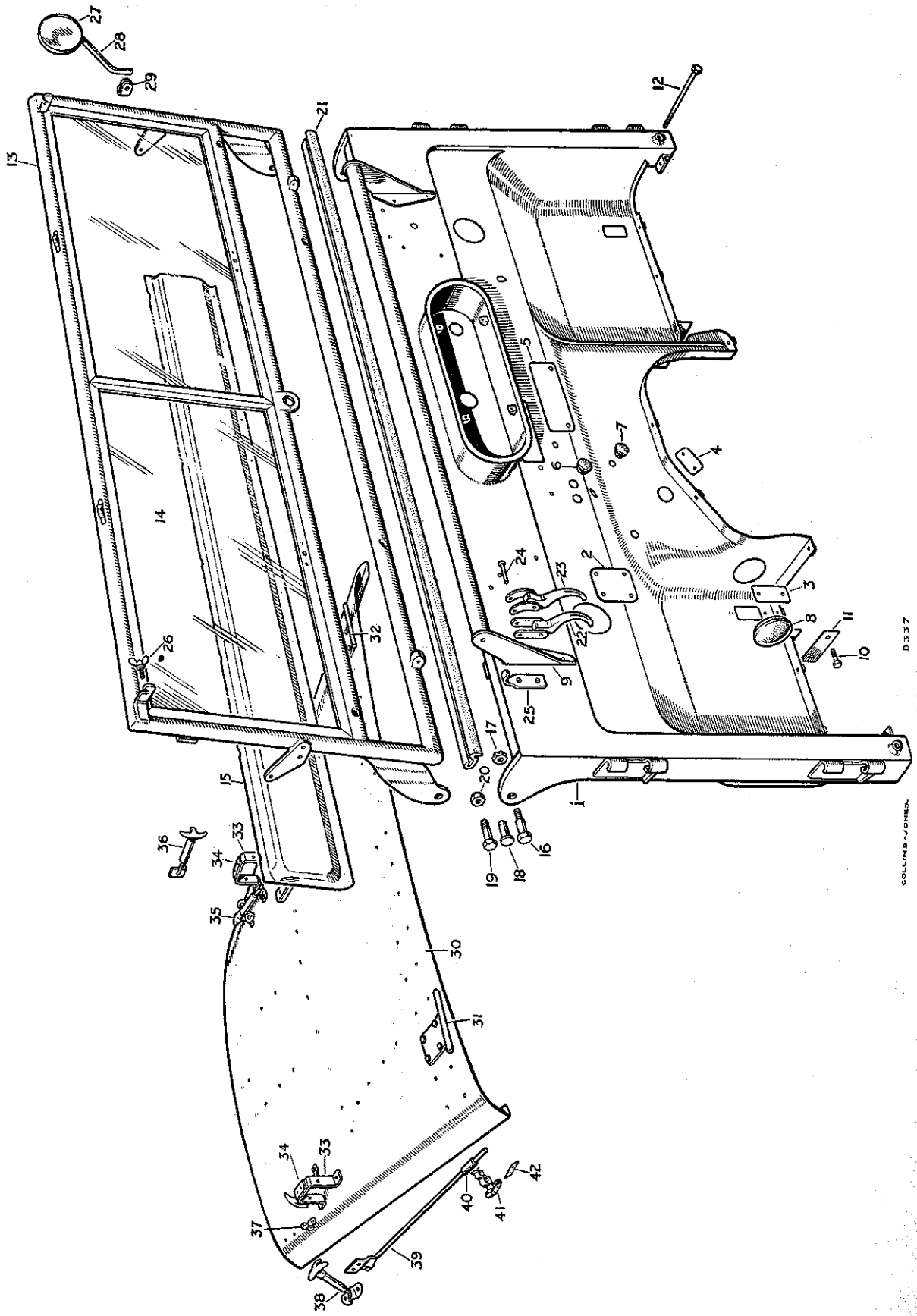

DASH, WINDSCREEN AND BONNET

PLATE REF.	1 2 3 4 DESCRIPTION		Qty.	Part No.	REMARKS
36	Fastener for windscreen		2	302326	†
37	Staple for bonnet and windscreen fastener		4	300693	2 off from vehicles numbered †
	Screw (2 B.A x ½″ long)	Fixing staples to bonnet top	12	77700	6 off from vehicles numbered †
	Plain washer		12	2678	
	Spring washer		12	3073	
	Nut (2 B.A.)		12	3823	
38	Bonnet fastener		2	300691	
	Bolt (¼″ x ⅝″ long)	Fixing fastener to wing	4	218552	
	Plain washer		4	2215	
	Spring washer		4	3074	
	Nut (¼″)		4	3819	
39	Prop rod for bonnet		1	300834	
40	Rubber tube for bonnet prop rod		1	301393	
	Bolt (¼″ x ⅝″ long)	Fixing prop rod to wing	2	218552	
	Spring washer		2	3074	
	Nut (¼″)		2	3819	
41	Spring clip for parking bonnet prop rod		1	300766	
	Screw (2 B.A. x ½″ long)	Fixing clip	2	77700	
	Spring washer		2	3073	
42	Tapped plate		1	301092	

† Vehicles numbered 16101483, 16132863 and 16161318 onwards
16300004, 16330004 and 16360008 onwards
16630043 and 16661423 onwards

cardiagn.com

TOOLS

PLATE REF. 1 2 3 4	DESCRIPTION	Qty.	Part No.	REMARKS
	Wheel brace	1	274433	
	Lifting jack	1	278345	
	Extension for jack	1	261512	
	Wooden handle for extension	1	261513	
	Tyre pump	1	233283	
	Connector for tyre pump	1	244934	
	Oil gun	1	233284	
	Starting handle	1	218508	
	Tool roll	1	219704	
	Combination pliers	1	2703	
	Screwdriver	1	234619	
	Spanner $\frac{3}{16}''$ x $\frac{1}{4}''$	1	2705	
	Spanner $\frac{5}{16}''$ x $\frac{7}{16}''$	1	230736	
	Spanner, single end $\frac{3}{8}''$	1	277320	
	Adjustable spanner	1	2707	
	Distributor screwdriver	1	3412	
	Sparking plug spanner	1	212735	
	Box spanner	1	52485	
	Tommy bar	1	1403	
	Tyre pressure gauge	1	05321	
	Tyre lever	2	233261	Export

cardiagn.com

TRIMMING RAW MATERIALS

PLATE REF. 1 2 3 4	DESCRIPTION	Qty.	Part No.	REMARKS
	Cotton duck 72″ wide	As required	91957	
	Sheet wadding	As required	91341	
	Cotton webbing $\frac{1}{32}$″ x 1″	As required	91878	
	Cotton webbing $\frac{1}{8}$″ x 1″	As required	91880	
	Cotton webbing $\frac{5}{64}$″ x $\frac{1}{2}$″	As required	91879	
	Seaming cord	As required	91171	
	Thin plain cloth 36″ wide	As required	91783	
	Black canvas 54″ wide	As required	91291	
	Black felt 50″ wide	As required	91819	
	Vynide, green 50″ wide	As required	91812	
	Piping, green	As required	91857	
	Thread, green No. 18	As required	91814	
	Thread, green No. 25	As required	91813	
	Thread, black No. 50	As required	91256	
	Fine fluted rubber matting 36″ wide	As required	261577	
	Special paint, Green 1 pint tin	As required	262069	
	Special paint, Green 1 gallon tin	As required	262072	
	Special paint, Ivory 1 pint tin	As required	261887	
	Special paint, Ivory 1 gallon tin	As required	261902	
	Special paint, Blue 1 pint tin	As required	244272	
	Special paint, Blue 1 gallon tin	As required	244275	
	Special paint, Red 1 pint tin	As required	244276	
	Special paint, Red, 1 gallon tin	As required	244279	
	Special paint, Beige 1 pint tin	As required	244280	
	Special pint, Beige 1 gallon tin	As required	244823	
	Special paint, Grey 1 pint tin	As required	244284	
	Special paint, Grey 1 gallon tin	As required	244287	
	Thinners 1 pint tin	As required	261906	
	Thinners 1 gallon tin	As required	261909	
	Aluminium paint 1 pint tin	As required	262091	
	Brake fluid 1 pint tin	As required	260681	
	Brake fluid 1 quart tin	As required	262079	
	$\frac{1}{8}$″ Welding rod (1 lb.)	As required	98018	

cardiagn.com

NUMERICAL INDEX

This list, in part number numerical order, gives the page on which the item will be found.

Part No	Page No	Part No	Page No	Part No	Page No	Part No	Page No	Part No	Page No
1403	178	2828	17	3674	41	02336	41	07160	107
1481	33	2836	51	3680	93	02585	41	07164	109
1510	101	2842	17	3697	57	02587	41	07289	45
1643	57	2851	175	3746	15	02589	41	07295	79
1645	53	2862	135	3764	67	02590	41	07296	79
1659	33	2863	75	3771	35	03017	9	07297	79
2069	19	2869	159	3779	23	03018	9	07316	77
2094	37	2876	71	3780	23	03020	9	07317	79
2096	121	2885	135	3783	33	03092	9	07343	91
2102	9	2890	7	3787	33	03093	9	07488	19
2104	7	2974	109	3792	23	03129	7	07635	65
2147	21	2980	53	3803	7	03170	11	07652	41
2208	75	2983	165	3816	141	03188	9	07657	91
2210	33	2995	7	3817	161	03437	95	07663	75
2213	45	3005	19	3819	93	03549	121	07675	59
2215	165	3008	165	3821	161	03534	75	07676	91
2218	109	3050	65	3822	117	03649	57	07691	75
2219	41	3052	95	3823	123	03971	149	07865	41
2220	21	3055	13	3828	173	04788	123	07877	7
2223	127	3057	23	3829	173	04799	123	07884	9
2226	45	3072	147	3830	161	04800	123	07902	75
2228	137	3073	21	3831	133	04801	123	07904	75
2247	21	3074	23	3832	173	04802	123	07925	7
2249	135	3075	13	3833	109	05321	178	08153	53
2255	131	3076	35	3836	125	05366	77	08185	53
2260	65	3077	13	3840	171	05367	83	08188	53
2264	77	3078	7	3841	157	05369	75	08250	53
2284	163	3088	17	3842	169	05555	157	08276	79
2288	167	3100	21	3843	171	05794	37	08566	41
2290	109	3101	21	3844	171	05847	55	08832	91
2347	7	3108	59	3849	173	05849	59	08972	141
2358	127	3136	137	3851	123	05852	57	09004	17
2388	109	3200	41	3852	159	05853	57	09005	17
2389	67	3236	45	3868	39	05854	57	09017	9
2392	9	3237	65	3892	163	05857	57	09023	15
2393	95	3238	45	3894	173	05891	41	09025	19
2395	41	3259	55	3895	167	05938	65	09027	19
2396	75	3279	123	3896	167	06009	77	09029	7
2422	19	3280	123	3905	65	06230	37	09034	7
2425	91	3289	33	3912	167	06395	53	09037	19
2428	55	3292	51	3926	137	06397	53	09038	19
2441	115	3294	81	3934	7	06402	53	09039	19
2464	67	3300	55	3936	21	06405	53	09049	19
2499	65	3310	143	6318	11	06417	45	09050	19
2500	9	3319	45	6395	9	06419	45	09052	19
2504	19	3359	31	6809	7	06421	57	09053	19
2529	55	3360	37	6936	91	06422	57	09065	7
2550	35	3412	178	8136	151	06424	55	09067	21
2552	175	3421	65	8885	151	06694	121	09071	21
2555	15	3485	149	9499	7	06717	77	09075	15
2678	21	3490	121	9775	105	06718	59	09084	37
2703	178	3522	127	01017	53	06719	77	09085	41
2705	178	3537	37	01035	19	06735	75	09089	9
2707	178	3551	37	01291	7	06748	77	09091	15
2712	178	3580	123	01379	109	06846	45	09092	15
2728	23	3604	11	01380	109	06860	121	09093	15
2729	23	3610	13	01384	109	07048	105	09101	7
2760	159	3616	153	01387	109	07091	123	09102	21
2766	75	3618	141	01564	75	07095	7	09118	25
2822	95	3619	39	01565	75	07096	7	09122	17
2823	9	3650	41	01624	109	07118	45	09126	15
2827	35	3651	41	01645	25	07142	91	09128	15

cardiagn.com

Part No	Page No	Part No	Page No	Part No	Page No	Part No	Page No	Part No	Page No
09129	15	42250	91	55779	49	77833	159	212322	13
09143	17	42255	91	56083	41	77845	163	212328	17
09144	17	42257	91	56102	57	77846	147	212329	17
09148	11	42431	75	56140	41	77861	157	212330	17
09156	15	42590	45	56169	91	77869	169	212332	7
09159	17	42699	91	56375	35	77887	157	212333	13
09161	35	42705	91	56398	21	77904	159	212334	13
09162	35	42707	91	56666	121	77992	149	212339	15
09170	25	42708	91	56667	141	78001	133	212340	15
09178	7	42709	91	56854	55	78006	151	212341	15
09179	33	42895	141	57126	7	78097	159	212345	25
09184	35	42896	141	58192	119	78109	133	212350	17
09187	23	43023	79	58395	59	78114	123	212360	23
09191	7	50052	123	58396	59	80603	37	212363	15
09197	25	50128	141	58397	59	81312	7	212364	15
09205	15	50139	81	58702	109	91171	179	212365	15
09207	7	50183	153	59050	19	91291	179	212366	9
09208	15	50216	41	59053	9	91774	179	212369	41
09209	9	50235	109	59054	9	91783	179	212373	19
09210	15	50298	145	59059	11	91812	179	212375	19
09225	19	50303	139	59155	21	91813	179	212381	41
09561	53	50315	133	59720	45	91814	179	212382	9
09906	15	50320	25	59895	141	91819	179	212383	9
09917	53	50323	139	64355	169	91856	179	212556	137
09920	53	50328	139	66299	161	91957	179	212557	137
09927	53	50330	139	68087	133	98018	179	212558	137
09931	53	50421	137	68845	163	210203	57	212702	13
09932	53	50472	111	69310	173	210204	57	212719	65
09960	53	50499	137	69402	133	210205	57	212735	178
09961	53	50524	63	70620	107	210206	57	212835	99
09962	53	50526	19	70621	107	210211	41	212912	101
10211	141	50528	45	70742	153	210372	13	212913	101
10541	141	50552	151	70822	37	210399	7	212919	99
10713	25	50637	153	70884	163	210404	7	212921	99
10841	37	50639	153	70886	45	210419	25	212936	99
10882	127	50642	151	70904	143	210447	33	212937	99
11378	75	50647	153	70916	175	210492	7	212942	99
11379	75	50682	91	71082	45	210515	15	212943	99
11820	103	50702	53	71164	143	210517	15	213172	37
11931	45	50703	53	71421	163	210566	39	213245	13
11932	45	52015	9	71734	141	210572	39	213251	15
12028	19	52124	7	72001	115	210604	119	213260	17
12455	17	52171	41	72626	103	210640	23	213340	95
12738	149	52177	7	72627	141	210679	15	213358	35
22066	153	52181	19	72628	45	210691	119	213408	41
26470	175	52182	19	73037	171	210699	119	213410	63
29979	141	52189	19	73350	13	211064	25	213413	63
40167	149	52246	45	73352	71	211382	65	213414	63
40394	91	52278	19	73408	133	211502	55	213416	53
40396	91	52485	178	74133	173	212023	23	213417	53
40397	91	52615	7	75804	147	212042	25	213418	63
40401	91	52710	19	75805	147	212098	13	213419	53
40405	91	55636	45	76356	163	212103	61	213461	65
40441	37	55638	57	76653	65	212104	25	213472	35
40742	75	55642	59	77212	153	212136	15	213574	13
40756	75	55697	57	77213	153	212137	15	213600	15
40758	75	55705	75	77626	67	212160	17	213601	15
40760	75	55706	59	77630	123	212161	17	213602	15
40797	91	55713	87	77697	175	212173	23	213636	57
41045	75	55714	53	77698	175	212207	11	213637	57
41048	77	55715	53	77700	123	212210	11	213655	63
41049	77	55726	59	77701	143	212232	33	213659	63
41050	77	55729	59	77704	159	212233	33	213660	63
41131	77	55738	59	77707	155	212277	11	213661	63
41409	153	55742	59	77784	159	212278	13	213662	47
41508	127	55775	57	77789	171	212308	19	213663	63
41856	75	55778	41	77808	125	212309	19	213666	53

cardiagn.com

Part No.	Page No.
213695	25
213698	25
213700	63
213724	25
213744	21
213810	13
213811	13
213887	13
213888	13
213889	13
213890	13
213960	67
213961	25
213966	23
213994	65
214019	33
214047	19
214054	33
214058	21
214090	53
214131	15
214173	55
214223	143
214228	33
214229	33
214231	33
214262	37
214278	37
214279	37
214301	69
214348	17
214350	17
214351	17
214649	95
214662	95
214684	95
214685	95
214766	21
214787	63
214789	25
214790	41
214792	53
214793	63
214794	63
214795	63
214796	63
214797	63
214802	75
214803	75
214867	7
214871	79
214924	131
214936	149
214967	7
214968	7
214970	23
214971	23
214982	75
214983	75
214989	19
214998	19
215053	7
215054	15
215072	117
215169	39
215170	51
215172	107

Part No	Page No.
215178	19
215180	25
215191	25
215207	131
215211	131
215269	117
215270	109
215272	41
215278	51
215280	95
215301	173
215331	89
215390	95
215404	93
215430	121
215452	123
215488	7
215494	45
215593	63
215594	49
215599	63
215647	25
215648	65
215758	37
215759	103
215761	21
215762	15
215769	45
215802	21
215808	67
215809	115
215843	59
215887	9
215935	9
215936	9
216014	149
216160	63
216161	63
216195	63
216322	23
216348	23
216350	23
216380	143
216421	67
216548	35
216600	41
216601	41
216627	21
216680	21
216708	103
216709	23
216773	151
216905	105
216909	105
216910	103
216911	105
216912	103
216913	103
216914	103
216915	103
216933	7
217179	41
217214	63
217216	63
217222	117
217224	119
217245	121

Part No.	Page No.
217247	119
217249	119
217253	121
217254	121
217259	121
217261	121
217265	121
217267	125
217268	87
217269	89
217270	89
217271	145
217272	25
217273	133
217274	133
217277	149
217282	87
217288	87
217289	87
217290	89
217315	95
217316	95
217317	97
217322	59
217324	59
217325	59
217326	59
217327	59
217328	59
217329	59
217330	59
217333	89
217334	87
217349	91
217351	89
217352	89
217353	89
217354	89
217355	89
217360	79
217361	125
217365	95
217372	79
217378	89
217387	53
217388	53
217389	55
217391	57
217396	139
217397	139
217398	87
217399	87
217400	81
217413	75
217419	87
217420	87
217422	89
217423	89
217425	81
217429	67
217437	133
217438	133
217445	67
217446	67
217447	49
217448	49
217453	87

Part No	Page No.
217454	87
217455	87
217468	87
217469	87
217474	55
217476	55
217477	55
217478	49
217484	55
217487	55
217488	55
217489	55
217490	55
217491	55
217493	59
217494	59
217507	77
217512	55
217521	59
217523	49
217525	49
217526	55
217530	37
217536	115
217546	55
217564	55
217565	55
217568	55
217571	85
217572	79
217575	139
217577	139
217578	139
217584	67
217587	67
217588	145
217589	141
217618	147
217620	49
217622	49
217623	49
217630	141
217636	105
217637	105
217638	105
217639	59
217678	59
217679	59
217680	49
217682	67
217694	95
217698	105
217701	105
217732	65
217735	65
217736	65
217737	65
217738	65
217739	65
217740	65
217741	65
217742	65
217748	81
217749	87
217750	87
217763	67
217764	141

Part No	Page No.
217766	59
217767	39
217778	49
217780	39
217781	39
217811	53
217816	105
217817	127
217819	105
217828	127
217829	127
217843	49
217844	49
217846	9
217870	11
217874	53
217910	11
217911	11
217912	11
217913	11
217926	11
217927	11
217930	9
217931	9
217932	9
217936	15
217937	9
217938	9
217939	9
217943	9
217944	9
217945	9
217949	9
217950	9
217951	9
217955	9
217956	9
217957	9
217968	51
217970	49
217973	49
217976	49
217978	49
217979	127
217982	127
217983	111
217984	111
217985	111
217986	127
217988	127
218008	63
218014	105
218020	135
218021	135
218024	135
218025	127
218026	127
218028	63
218036	123
218037	123
218046	23
218047	23
218051	127
218052	107
218056	123
218068	105
218070	105

No.	Part No.	Page No.	Part No.	Page No.	Part No.	Page No.	Part No.	Page No.	Part No.	Page No.
59	218072	127	218976	99	219641	33	219988	63	230760	95
39	218073	105	218977	99	219642	33	219995	49	230762	95
49	218132	175	218981	99	219643	33	230001	59	230845	7
39	218149	101	218982	99	219645	151	230007	87	230858	87
39	218160	75	218983	99	219646	151	230021	49	230865	95
53	218161	81	218984	99	219648	151	230035	139	230894	105
105	218182	139	218989	99	219649	151	230077	63	230895	105
127	218193	81	218990	99	219651	151	230086	67	231033	57
105	218203	27	218994	105	219654	141	230087	67	231057	17
127	218243	55	219002	115	219656	65	230140	49	231071	63
127	218244	55	219007	115	219657	65	230168	23	231074	63
49	218259	51	219010	115	219670	141	230169	23	231075	63
49	218270	51	219011	115	219676	153	230170	23	231115	65
9	218294	129	219012	115	219677	153	230171	23	231116	65
11	218372	129	219013	115	219678	153	230172	23	231143	25
53	218374	129	219017	115	219679	153	230173	23	231175	129
11	218375	129	219018	115	219680	153	230184	95	231179	79
11	218378	129	219019	115	219681	153	230196	107	231180	79
11	218379	109	219020	115	219689	91	230204	129	231181	87
11	218380	109	219021	115	219690	91	230213	99	231182	87
11	218381	109	219022	115	219696	79	230240	137	231183	95
11	218382	109	219023	115	219697	105	230242	69	231184	95
9	218383	111	219024	115	219704	178	230259	23	231188	135
9	218386	115	219025	99	219709	67	230262	23	231189	135
9	218387	115	219027	115	219714	65	230268	23	231190	135
15	218388	115	219028	115	219717	65	230284	105	231196	117
9	218391	115	219061	129	219721	65	230285	105	231224	119
9	218392	129	219078	149	219722	65	230288	195	231241	77
9	218398	129	219098	89	219723	65	230294	95	231242	77
9	218400	111	219198	131	219725	57	230295	95	231261	35
9	218402	111	219208	109	219729	67	230300	7	231265	79
9	218403	111	219213	127	219730	67	230304	43	231266	79
9	218407	111	219245	133	219745	143	230313	15	231267	35
9	218408	111	219466	55	219775	67	230328	133	231275	29
9	218409	111	219468	55	219776	69	230329	133	231272	79
9	218410	111	219469	55	219777	67	230353	45	231277	137
9	218414	115	219479	49	219779	69	230359	135	231289	35
9	218468	135	219482	129	219781	67	230368	157	231290	35
51	218469	135	219484	149	219797	65	230438	77	231291	35
49	218470	135	219489	15	219798	65	230439	77	231292	35
49	218471	135	219499	33	219801	65	230440	77	231298	63
49	218485	117	219500	33	219802	65	230441	153	231299	95
49	218498	21	219501	143	219813	103	230468	175	231318	109
127	218507	178	219502	33	219814	103	230492	27	231319	109
127	218508	178	219504	15	219816	103	230501	99	231321	109
111	218509	178	219507	35	219817	103	230502	99	231345	75
111	218517	7	219509	129	219818	103	230503	99	231387	59
111	218552	93	219521	67	219819	103	230507	21	231404	149
127	218563	25	219527	107	219822	103	230508	19	231405	149
127	218565	171	219544	77	219824	103	230509	45	231406	149
63	218566	131	219547	77	219825	103	230510	21	231437	99
105	218576	27	219548	77	219826	103	230511	87	231478	21
135	218579	141	219549	77	219827	103	230674	175	231479	21
135	218799	23	219550	77	219828	103	230689	119	231480	21
135	218828	23	219571	103	219829	105	230690	119	231481	21
127	218831	23	219573	121	219857	67	230696	49	231494	139
127	218832	21	219574	121	219878	67	230709	119	231505	89
63	218835	21	219575	123	219880	67	230710	119	231515	139
123	218913	21	219582	33	219881	59	230711	119	231517	139
123	218954	33	219583	121	219882	59	230713	117	231531	139
23	218955	137	219590	63	219883	69	230721	119	231553	149
23	218957	137	219603	65	219891	149	230736	178	231557	129
127	218959	137	219604	65	219894	45	230741	115	231573	129
107	218963	99	219620	99	219895	45	230743	119	231574	127
123	218969	99	219629	41	219913	15	230757	95	231575	23
105	218970	99	219635	75	219914	15	230758	95	231594	139
105	218971	99	219640	123	219928	59	230759	95	231601	125

cardiagn.com

Part No.	Page No.
231647	163
231737	53
231759	43
231772	123
231774	151
231784	121
231842	21
231844	21
231845	21
231848	21
231854	21
231879	43
231880	43
231881	43
231883	43
231884	43
231885	43
231886	43
231888	43
231910	141
231911	141
231918	89
231942	63
231943	63
231947	37
231952	123
231995	123
232053	125
232074	101
232077	101
232078	101
232088	121
232089	121
232095	143
232096	143
232097	143
232098	101
232107	101
232108	147
232122	125
232123	125
232165	111
232171	111
232174	91
232404	41
232413	87
232415	55
232451	139
232454	21
232464	71
232469	81
232470	75
232497	49
232539	123
232548	123
232550	123
232557	79
232565	55
232566	141
232570	141
232590	141
232604	45
232606	45
232608	65
232625	117
232627	47
232635	139
232647	45
232651	139
232669	59
232672	149
232673	149
232674	149
232682	123
232693	95
232745	63
232807	67
232808	67
232811	77
232813	67
232822	67
232840	39
232846	49
232853	145
232866	49
232867	55
232898	45
232930	45
232944	67
232955	25
232992	139
233017	143
233041	125
233042	125
233072	15
233077	81
233078	81
233079	75
233170	25
233175	89
233199	75
233241	61
233243	151
233244	153
233245	153
233246	153
233247	153
233261	178
233280	151
233281	151
233283	178
233284	178
233310	147
233379	47
233380	45
233395	143
233397	71
233398	71
233406	71
233407	71
233408	71
233409	71
233410	71
233414	71
233416	71
233419	11
233427	15
233430	11
233436	71
233437	71
233438	71
233440	25
233441	71
233442	71
233446	49
233448	61
233449	71
233450	71
233460	21
233463	151
233464	61
233465	61
233466	61
233468	61
233473	77
233520	23
233528	151
233531	151
233533	151
233538	145
233539	145
233555	45
233568	39
233573	119
233574	117
233575	45
233618	131
233619	131
233624	143
233625	119
233629	119
233630	119
233638	143
233640	119
233642	119
233662	131
233677	77
233678	77
233770	153
233771	153
233802	27
233931	131
234023	81
234027	75
234086	145
234089	23
234091	23
234117	153
234184	65
234212	147
234213	147
234252	71
234288	19
234291	19
234296	19
234303	151
234304	151
234309	137
234310	19
234312	19
234328	11
234329	11
234365	145
234401	141
234523	153
234524	61
234525	61
234532	85
234534	61
234536	141
234537	141
234538	45
234563	141
234565	81
234603	21
234613	13
234628	129
234630	129
234632	129
234633	129
234634	129
234635	129
234636	129
234643	51
234658	71
234668	131
234672	131
234718	45
234734	121
234749	45
234814	51
234824	173
234829	173
234832	11
234835	55
234922	141
234993	15
234996	141
234997	141
235006	105
235010	105
235013	11
235014	11
235015	11
235016	11
235034	11
235035	11
235036	11
235037	11
235043	11
235044	11
235045	11
235046	11
235083	19
235119	145
235232	145
235278	103
235365	7
235416	71
235438	55
235455	49
235493	137
235552	39
235553	149
235556	141
235569	27
235570	25
235592	75
235634	133
235649	129
235663	145
235664	145
235665	145
235666	145
235682	135
235716	151
235720	7
235730	117
235731	117
235968	89
235985	55
236011	21
236018	21
236019	133
236042	151
236043	151
236062	151
236063	151
236064	151
236065	151
236070	87
236102	147
236136	151
236137	151
236138	151
236139	151
236140	151
236141	151
236151	17
236305	55
236356	131
236360	39
236365	153
236366	151
236398	85
236417	55
236421	151
236534	87
236535	87
236615	125
236628	49
236630	55
236632	77
236805	117
236850	121
236891	135
236894	131
236895	131
236896	131
236923	79
236988	7
237037	127
237041	147
237119	13
237138	89
237139	93
237141	155
237142	9
237144	93
237150	25
237158	93
237159	21
237160	51
237161	13
237163	131
237179	75
237194	117
237236	87
237237	87
237238	87
237239	87
237240	87
237243	149
237272	9
237327	127

e No.	Part No.	Page No.	Part No.	Page No.	Part No.	Page No.	Part No.	Page No.	Part No.	Page No.
117	237329	39	241884	25	260079	37	260773	31	261611	41
89	237333	39	242117	101	260092	37	260819	105	261618	173
55	237336	95	242126	111	260133	53	260820	105	261619	91
21	237339	89	242133	109	260138	29	261238	39	261624	117
21	237341	79	242180	95	260139	29	261239	37	261625	119
133	237423	65	242259	91	260140	29	261240	37	261638	147
151	237435	149	242294	91	260141	29	261241	37	261639	147
151	237540	141	242295	91	260142	29	261242	37	261640	147
151	237637	57	242302	91	260143	29	261244	37	261641	147
151	237774	31	242303	91	260146	29	261246	149	261791	145
151	237896	145	242467	115	260148	29	261252	147	261792	145
151	237926	9	242491	147	260152	29	261253	147	261793	145
87	237928	9	242522	79	260155	29	261410	29	261794	145
147	237929	9	242672	39	260156	29	261411	31	261836	149
151	237990	81	242686	61	260157	29	261412	139	261837	149
151	237991	81	242742	87	260159	29	261413	139	261842	39
151	238018	141	242958	37	260163	29	261414	139	261846	73
151	238019	141	242988	21	260164	31	261415	135	261887	179
151	238020	141	242993	43	260165	31	261417	135	261902	179
151	238032	151	242996	43	260166	31	261418	135	261906	179
17	238339	53	243225	107	260167	31	261419	135	261909	179
55	238799	119	243237	7	260168	31	261420	29	261919	147
131	239016	143	243287	101	260169	31	261421	29	261921	43
39	239089	17	243288	101	260170	31	261422	91	261935	39
153	239160	53	243373	133	260175	31	261423	91	261940	145
151	239192	45	243394	29	260178	31	261426	91	261941	145
85	239422	89	243471	125	260179	31	261428	79	261943	145
55	239544	17	243508	151	260180	31	261429	117	261969	141
151	239545	17	243531	13	260181	31	261430	119	261995	145
87	239546	17	243611	61	260213	31	261434	91	261998	147
87	239547	17	243920	29	260261	31	261483	39	262051	145
125	239645	55	244128	145	260262	31	261487	37	262063	145
49	239656	123	244337	79	260275	31	261489	37	262064	145
55	239705	53	244338	79	260325	53	261490	145	262065	117
77	239718	121	244700	147	260550	135	261491	145	262066	117
117	239742	125	244706	37	260583	135	261492	145	262068	139
121	239773	91	244718	37	260585	137	261493	145	262069	179
135	239925	65	244934	178	260681	179	261494	145	262072	179
131	239926	65	245227	91	260682	147	261495	145	262079	179
131	239927	65	245228	91	260700	29	261496	145	262085	39
131	239928	65	248091	129	260702	29	261497	145	262089	87
79	240102	149	250431	123	260704	29	261498	145	262090	87
7	240136	107	250517	9	260705	29	261499	147	262091	179
127	240137	107	250530	21	260707	29	261500	147	262100	145
147	240138	37	250531	21	260708	29	261501	147	262101	145
13	240185	95	250532	19	260714	31	261502	149	262103	37
89	240186	95	250539	117	260719	31	261503	149	262153	91
93	240187	97	250541	109	260721	31	261504	149	262215	167
155	240191	127	250542	41	260723	29	261505	37	262268	145
9	240234	135	250573	45	260732	29	261506	37	262269	145
93	240235	135	251321	43	260734	29	261508	29	262278	135
25	240236	135	251322	117	260735	29	261509	135	262286	135
93	240255	119	251323	121	260737	29	261511	151	262287	135
21	240270	39	251324	119	260739	29	261512	178	262288	137
51	240271	39	251600	19	260741	29	261513	178	262289	137
13	240404	43	251601	71	260743	31	261562	29	262290	137
131	240485	53	251618	91	260745	31	261563	29	262292	137
75	240526	23	260006	75	260747	31	261564	31	262293	137
117	240789	21	260007	75	260749	31	261570	29	262294	137
87	240796	121	260029	37	260751	31	261577	179	262295	137
87	241037	121	260031	91	260752	31	261580	29	262296	137
87	241038	121	260039	147	260753	31	261581	29	262297	137
87	241110	45	260046	37	260754	29	261592	29	262298	137
87	241388	95	260055	37	260765	29	261583	29	262299	135
149	241649	53	260059	147	260767	29	261584	29	262300	135
9	241650	53	260070	37	260768	31	261594	29	262301	135
127	241651	53	260073	37	260771	31	261609	41	262302	135

cardiagn.com

Part No.	Page No.
262303	135
262304	135
262305	137
262306	137
262307	137
262308	137
262309	137
262310	137
262311	137
262312	31
262313	29
262341	119
262342	145
262343	145
262391	117
262392	117
262393	117
262394	117
262395	117
262396	117
262397	117
262398	117
262399	117
262400	119
262401	119
262402	119
262403	119
262404	119
262405	119
262406	119
262407	119
262408	119
262409	119
262410	119
262411	119
262468	79
262469	79
262631	147
262632	147
262635	147
262636	149
262658	175
262659	31
262662	7
262679	175
262687	31
262697	31
262796	37
262859	149
262860	39
262861	37
262926	37
262929	39
262969	37
263142	125
263354	119
263607	25
263630	25
263670	25
263695	25
263732	149
264039	101
264040	101
264374	115
264498	99
264639	45
264807	63

Part No.	Page No.
265047	23
265258	53
265331	15
265444	7
265495	29
266466	41
266679	99
266681	99
266687	101
266750	87
266900	19
266924	11
266955	67
267379	87
267572	53
267573	53
267574	53
267575	53
267779	21
267781	13
267794	55
267795	51
267981	23
267829	19
267837	135
268374	135
268598	25
268674	137
268791	55
269125	15
269413	45
269854	7
270167	149
270287	87
270522	117
270741	119
272094	91
272244	175
272789	25
273080	115
273935	141
274323	135
275376	137
275744	101
277311	89
278524	105
279880	175
300559	155
300565	173
300566	173
300573	155
300574	155
300583	173
300588	167
300611	175
300630	169
300631	169
300659	155
300660	155
300661	155
300674	157
300690	175
300691	177
300692	175
300693	177
300713	93
300715	93

Part No.	Page No.
300716	93
300734	175
300742	175
300743	175
300754	155
300764	155
300765	157
300766	157
300767	173
300781	155
300782	167
300783	155
300784	155
300789	163
300794	173
300796	163
300797	163
300797	163
300804	155
300805	155
300808	155
300809	175
300810	167
300814	161
300815	161
300816	121
300824	133
300825	155
300827	173
300834	177
300837	157
300838	167
300840	133
300844	175
300845	159
300849	159
300850	159
300851	159
300853	133
300854	133
300865	155
300875	159
300878	159
300881	161
300882	161
300896	173
300897	159
300901	173
300912	159
300914	161
300916	169
300917	169
300918	173
300919	167
300924	157
300933	155
300938	171
300940	171
300948	163
300962	165
300969	167
300970	167
300975	169
300984	171
300987	155
300993	171
300994	171

Part No.	Page No.
300995	171
300996	171
300999	133
301061	173
301075	159
301080	161
301085	171
301086	171
301091	173
301092	157
301093	171
301094	171
301096	171
301097	171
301109	157
301111	163
301124	165
301131	155
301136	181
301139	159
301140	169
301141	169
301142	133
301147	161
301148	173
301153	159
301157	171
301158	171
301159	171
301160	171
301161	171
301162	171
301166	161
301170	159
301174	159
310177	159
301191	161
301201	163
301207	165
301208	165
301209	165
301217	159
301218	163
301219	163
301253	173
301261	159
301263	161
301267	155
301269	167
301270	167
301281	163
301282	173
301283	91
301284	163
301285	171
301286	171
301287	171
301288	171
301328	157
301335	155
301337	155
301338	155
301346	173
301347	153
301389	173
301393	177
301403	173

Part No.	Page No.
301407	169
301409	169
301411	169
301415	169
301416	167
301418	167
301419	167
301420	167
301421	167
301422	167
301432	167
301437	161
301502	169
301503	159
301870	167
301871	161
301872	173
301875	159
301876	161
301893	169
301900	133
301916	171
301917	171
301918	171
301922	173
301930	157
301957	159
301963	155
301964	155
301965	169
301966	163
301967	169
301975	163
301976	163
301985	157
301988	159
301997	163
302032	167
302034	167
302036	159
302042	173
302179	163
302180	163
302181	163
302222	155
302230	155
302233	163
302234	163
302240	167
302242	173
302245	169
302247	169
302248	169
302249	155
302298	147
302300	173
302303	167
302304	163
302325	175
302326	177
302327	167
302328	167
302332	167
302334	167
302335	167
302337	175
302338	175

cardiagn.com

No.	Part No.	Page No.	Part No.	Page No.	Part No.	Page No.	Part No.	Page No.	Part No.	Page No.
169	302361	133								
169	302362	133								
169	302363	163								
169	302381	155								
167	302437	141								
167	302440	175								
167	302460	159								
167	302463	163								
167	302525	141								
167	302534	173								
167	302550	165								
161	302551	165								
169	302552	165								
159	302554	169								
167	302555	169								
161	302575	93								
173	302584	173								
159	302619	171								
161	304035	155								
169	304100	171								
133	304101	171								
171	304351	163								
171	305273	155								
171	306465	133								
173	307220	173								
157	307412	163								
159	307413	163								
155	307975	169								
155	307976	169								
169	311483	153								
163	311970	133								
169										
163										
163										
157										
159										
163										
167										
167										
159										
173										
163										
163										
163										
155										
155										
163										
163										
167										
173										
169										
169										
169										
155										
147										
173										
167										
163										
175										
177										
167										
167										
167										
167										
167										
175										
175										

cardiagn.com

cardiagn.com

LAND-ROVER

SECTION II

1952-53 MODELS

For vehicles numbered:

MODEL	YEAR 1952	YEAR 1953
Basic Vehicle Home	26100001 onwards	36100001 onwards
Basic Vehicle L.H.D. Export	26130001 onwards	36130001 onwards
Basic Vehicle R.H.D. Export	26160001 onwards	36160001 onwards
Welding Outfit Home	26300001 onwards	36300001 onwards
Welding Outfit L.H.D. Export	26330001 onwards	36330001 onwards
Welding Outfit R.H.D. Export	26360001 onwards	36360001 onwards
C.K.D. L.H.D. Export	26630001 onwards	36630001 onwards
C.K.D. R.H.D. Export	26660001 onwards	36660001 onwards

cardiagn.com

cardiagn.com

INDEX TO SECTIONS, 1952-53

Description	Page
A	
Accelerator lever and rods	102–103
B	
Body cappings and sockets	126–129
Brake master cylinder and brake lever	84– 87
Brakes, foot	80– 83
C	
Carburettor	26– 29
Chassis frame, road springs and shock absorbers	94– 99
Clutch pedal and linkage	100–101
Clutch withdrawal mechanism	52– 53
Crankshaft and cylinder head	8– 13
Cylinder block	6– 7
D	
Dash, windscreen and bonnet	142–147
Distributor and starter	32– 33
Dynamo and fixings	34– 35
E	
Exhaust system	104–105
F	
Flywheel and clutch	36– 37
Four-wheel drive selectors and transfer gear lever	56– 59
Front axle and propeller shaft	64– 67
Front cover, side cover and sump	20– 21
Front output shaft housing, four-wheel drive	50– 51
Fuel system	108–113
G	
Gearbox, main casing	38– 39
Gearbox, selectors and levers	48– 49
Gearbox, shafts and gears	44– 47
Gearbox, transfer casing	40– 43
General electrical equipment	122–125
H	
Handbrake lever, L.H.D.	90– 91
Handbrake lever, R.H.D.	88– 89
Handbrake, transmission	92– 93
Head, side and tail lamps	118–121
I	
Instruments	114–117
M	
Main gear lever	54– 55
Manifolds	30– 31
N	
Numerical index	150–156
O	
Oil filter, pipes and oil filler	22– 23
Oil pump	18– 19
R	
Radiator and fittings	106–107
Rear axle and propeller shaft	60– 63
S	
Seat base, seats, front floor and front wings	130–135
Steering column	72– 75
Steering relay and linkage	76– 79
T	
Tailboard, doors and side screens	136–141
Tools	148
Tracta joints and front hubs	68– 71
Trimming raw materials	149
V	
Valve gear	14– 17
W	
Water pump and thermostat	24– 25

cardiagn.com

INDEX

A	Description	Page
Air cleaner		113
Accelerator pedal		103
Accelerator pedal housing		103
Accelerator shaft		103
Adjuster timing chain		15
Ammeter		115
Anchor plate brake foot		81
Anchor plate, brake, hand		93
Axle, front		65
Axle, rear		61
Axle, stub		71

B		
Back rest, seat		133
Balance weight, road wheel		99
Battery		123
Battery casing		99
Bearing, camshaft		15
Bearing connecting rod		9
Bearing, gearbox		45
Bearing, main		9
Bearing, transfer box		47
Belt, fan		25
Bell housing		39
Board, floor		127
Board, tail		137
Body		127
Body mounting		129
Body sides		127
Bonnet		145
Bonnet fastener		147
Brake cylinder, master		85
Brake cylinder wheel		81
Brake drum foot		81
Brake drum hand		93
Brake, hand, L.H.D.		91
Brake, hand, R H D		89
Brake lever, hand		89
Brake pedal		87
Brake pipes		83
Brake shoe foot		81
Brake shoe hand		93
Brake supply tank		85
Brakes foot		81
Brake transmission		93
Breather pipe, engine		21
Bumper front		95

C		
Cable clips		125
Cable harness, dash		123
Cable harness frame		123
Cable harness, headlamp		123
Cable, speedometer		115

C	Description	Page
Camshaft		15
Camshaft bearing		15
Camshaft chain		15
Camshaft chain adjuster		15
Carburettor		27
Carburettor levers		31
Casing, transfer box		41
Centre cover panel		131
Chain, tailboard		129
Change speed lever, main		55
Change speed lever, transfer		57
Chassis frame		95
Cleaner, air		111
Clutch		37
Clutch pedal		101
Clutch shaft		101
Clutch withdrawal		53
Coil, ignition		123
Connecting rod		9
Connecting rod bearing		9
Control box, voltage		123
Control, mixture		117
Cover, front		21
Cover, gearbox		133
Cover plate, rear water pipe		7
Cover plate, wing valance		135
Cover, rocker side		21
Cover rocker top		13
Crankcase sump		21
Crankshaft		9
Cushion seat		135
Cylinder block		7
Cylinder brake, master		85
Cylinder, brake, wheel		81
Cylinder head		11

D		
Damper, vibration		9
Dash		143
Differential, front		65
Differential rear		61
Dipstick, gearbox		39
Dipstick, sump		21
Distributor		33
Distributor housing		19
Door hinge		139
Door lock		139
Doors and fittings		137
Drag link		77
Drawbar rear		95
Driving shaft, oil pump		19
Drop arm		73
Drum, foot brake		81
Drum hand brake		93
Dynamo		35

cardiagn.com

E	Description	Page
Engine		7
Engine breather pipe		21
Engine support, front		7
Engine support, rear		43
Exhaust manifold		31
Exhaust pipe, front		105
Exhaust silencer		105
Exhaust valve		15

F	
Fan	25
Fan belt	25
Fastener bonnet	147
Fastener, windscreen	145
Filler cap, petrol	109
Filter, oil, external	23
Floor board	127
Flywheel	37
Flywheel housing	37
Follower, inlet valve	17
Four-wheel drive selector	57
Frame harness	123
Front bumper	95
Front cover	21
Front exhaust pipe	105
Front shock absorber	97
Front wing	135
Fuse box	123

G	
Gallery pipe, oil	7
Gearbox	39
Gearbox bearings	45
Gearbox cover	133
Gears, main gearbox	45
Gears, transfer box	47
Glass, windscreen	143
Grille, radiator	107
Grommet, bell housing	39
Grommet rubber, electrical	125
Gudgeon pin	11

H	
Hand brake lever	89
Handle, lifting	97
Harness, dash	123
Harness, frame	123
Harness panel	115
Headlamp	119
Hinge, bonnet	145
Hinge, door	139
Hinge, locker lids	131

H	Description	Page
Hood socket		127
Horn		123
Horn button and dipper switch		73
Housing, accelerator pedal		103
Housing, clutch withdrawal		53
Housing, distributor		19
Housing, rear mainshaft bearing		41
Housing, swivel pin		69
Housing, thermostat		25
Housing, transfer shaft		51
Hub, front		71

I	
Inlet manifold	31
Inlet valve	15
Inner tube	99
Instruments	115

L	
Lamp, head	119
Lamp, number plate	121
Lamp rear	119
Lamp, side	119
Lamp, stop	119
Layshaft	45
Level unit, petrol tank	109
Lever, carburettor	31
Lever, change speed, main	55
Lever, change speed, transfer	57
Lever, clutch	101
Lever, hand brake	89
Lever, steering	69
Lever, steering relay	77
Lifting handle	97
Light, warning, instrument panel	115
Link, drag	77
Lock, door	139
Longitudinal tube, steering	79

M	
Main bearing	9
Mainshaft, bearing housing rear	41
Mainshaft, gearbox	45
Manifold, exhaust	31
Manifold, inlet	31
Master cylinder, brake	85
Mounting body	129
Mixture control	117

N	
Number plate lamp	121

cardiagn.com

O	Description	Page
Oil filter external		23
Oil strainer		19
Oil gallery pipe		7
Oil pressure switch		23
Oil pump		19
Oil pump driving shaft		19
Output shaft, four-wheel drive		51
P		
Paint		149
Panel harness		115
Pedal, accelerator		103
Pedal, brake		87
Pedal, clutch		101
Petrol pipe		111
Petrol pump		109
Petrol sediment bowl		109
Petrol tank		109
Petrol tank level unit		109
Pin, gudgeon		11
Pin, shackle		95
Pin, swivel		69
Pipe, brake		83
Pipe, engine breather		21
Pipe, oil gallery		7
Piston		11
Piston ring		11
Plate, toe		131
Plug, sparking		33
Propeller shaft front		67
Propeller shaft, rear		63
Pump, oil		19
Pump petrol		109
Pump, water		25
Push rod inlet		17
R		
Radiator		107
Rear axle		61
Rear axle casing		61
Rear axle shaft		63
Rear drawbar		95
Relay lever, steering		77
Release valve, oil		19
Ring, piston		11
Road spring, front		95
Road spring, rear		95
Road wheel		99
Rocker cover, side		21
Rocker cover, top		13
Rod hand brake		93
Rod, track		77
Rubber grommet, electrical		125
S		
Seat		133
Seat cushion		135
Sediment bowl, petrol		109
Selector, four-wheel drive		57

S	Description	Page
Selector shaft gear		49
Shackle pin		95
Shaft, brake lever		85
Shaft, clutch lever		101
Shaft front axle		69
Shaft, gearbox selector		49
Shaft, output, four-wheel drive		51
Shaft, propeller, front		67
Shaft propeller, rear		63
Shaft rear axle		63
Shock absorber, front		97
Shock absorber rear		97
Shoe foot brake		81
Shoe, hand brake		93
Side lamp		119
Side screen		141
Silencer, exhaust		105
Sleeve, clutch withdrawal		53
Sparking plug		33
Speedometer		115
Speedometer cable		115
Spring, road front		95
Spring, road rear		95
Starter motor		33
Steering column		73
Steering drag link		77
Steering, longitudinal tube		79
Steering, relay lever		77
Steering, track rod		77
Steering wheel		73
Stop lamp		119
Strainer, oil		19
Stub axle		71
Sump crankcase		21
Sump strainer		19
Supply tank, brake		85
Support bracket, steering column		75
Support, engine, front		7
Support, engine, rear		43
Switch, lamps		115
Switch, oil pressure		23
Switch, panel lights		115
Switch, starter		115
Switch, stop lamp		87
Swivel pin		69
Swivel pin housing		69
Synchronising clutch		45
T		
Tailboard		137
Tailboard chain		129
Tail lamp		119
Tank, brake supply		85
Tank, petrol		109
Tappet push rod		17
Thermostat		25
Thermostat housing		25
Timing chain		15
Toe plate		131
Tools		148
Track rod		77

cardiagn.com

T	Description	Page
Transfer box casing		41
Transfer shaft housing		51
Transmission brake		93
Trimming materials		149
Tyre, road wheel		99
V		
Valve guide, exhaust		7
Valve guide, inlet		11
Vibration damper		9
Voltage control box		123

W	Description	Page
Water pump		25
Wheel cylinder, brake		81
Wheel, road		99
Wheel, steering		73
Windscreen		143
Windscreen fastener		145
Windscreen wiper		123
Wing, front		135
Wing valance cover plate		135
Withdrawal clutch		53

cardiagn.com

CYLINDER BLOCK

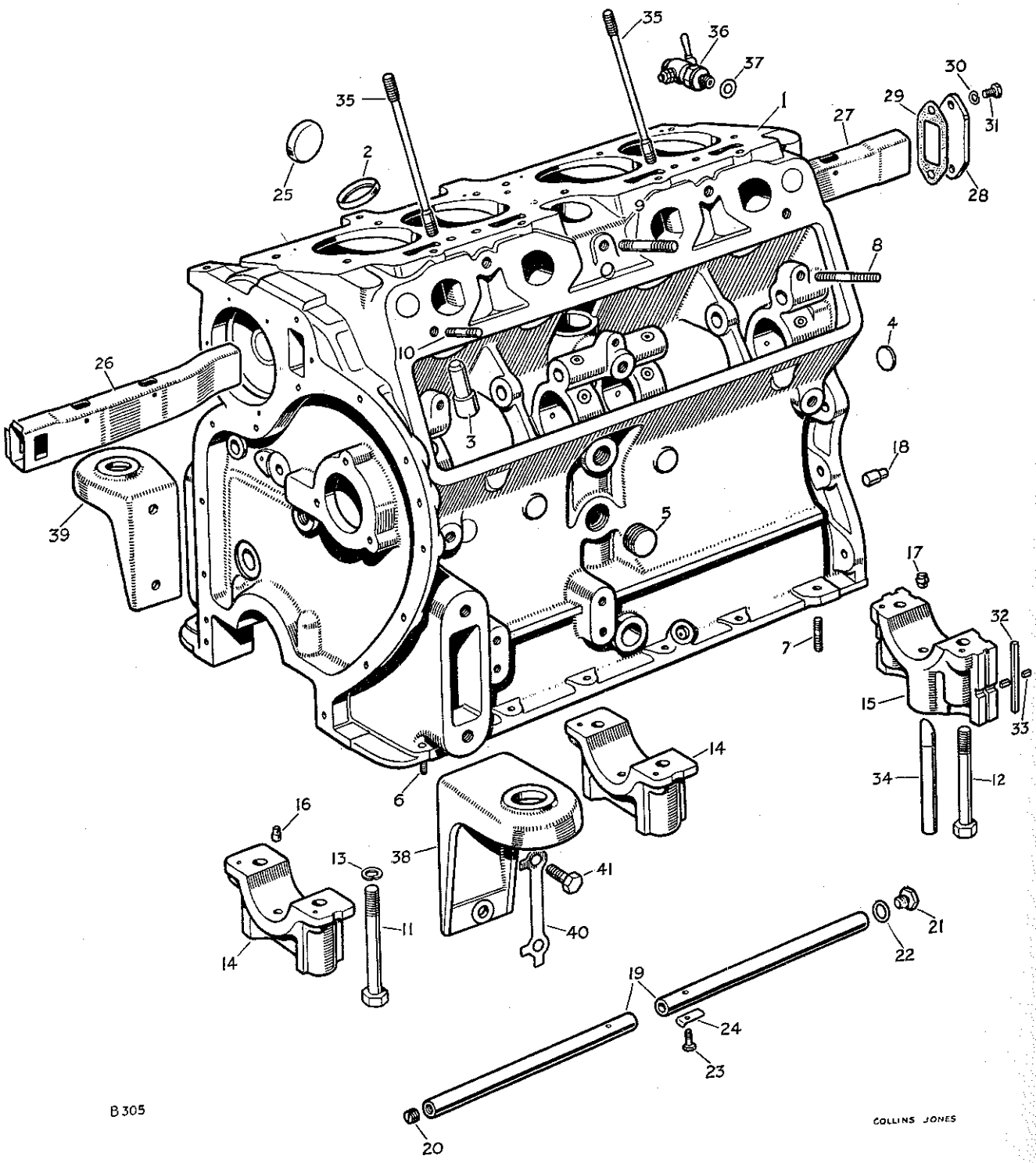

CYLINDER BLOCK

PLATE REF.	1 2 3 4 DESCRIPTION	Qty.	Part No.	REMARKS
	ENGINE AND CLUTCH ASSEMBLY	1	233551	
	Cylinder block, crankshaft, pistons, camshaft and valve gear	1	262663	
1	CYLINDER BLOCK ASSEMBLY	1	236191	
2	Insert for exhaust valve seat	4	09065	
3	Valve guide, exhaust	4	265444	
4	Core plug, $1\frac{1}{8}''$ dia.	4	52615	
5	Core plug, 1" dia.	2	09191	
6	Stud, short } For oil sump	10	2890	
	Stud } For oil sump	3	57126	
7	Stud, long } For oil sump	2	52177	
8	Stud, short, for bottom rocker cover	2	9499	3 off from Engines numbered 26100201 onwards
	Stud, long, for cover and oil filler	1	6809	Engines numbered 26100001 to 26100200
9	Stud, long } For exhaust manifold	3	09207	
10	Stud, medium } For exhaust manifold	1	57126	Engines numbered 26100001 to 26100200
	Stud, short } For exhaust manifold	1	01291	2 off from Engines numbered 26100201 onwards
11	Set bolt for main bearing	4	233608	
12	Set bolt for main bearing, rear	2	233607	
13	Special spring washer for set bolt	6	243419	
16	Dowel, locating main bearing and bearing cap	11	07877	
17	Dowel, locating rear main bearing cap	1	230300	
18	Dowel, locating flywheel housing	2	52124	
19	Oil gallery pipe	2	09034	
20	Plug for gallery pipe, front	1	03129	
21	Plug for gallery pipe, rear	1	216933	
22	Joint washer for rear plug	1	3803	
23	Set bolt ($\frac{1}{4}''$ x $\frac{5}{8}''$ long) } Fixing gallery pipe to block	2	215053	
24	Locker } Fixing gallery pipe to block	2	2995	
25	Cup plug	3	236988	
26	Water pipe, front } In cylinder block	1	231220	
27	Water pipe, rear } In cylinder block	1	231221	
28	Cover plate for rear water pipe	1	231218	
29	Joint washer for cover plate	1	231219	
30	Spring washer } Fixing cover plate	2	3074	
31	Set bolt ($\frac{1}{4}''$ x $\frac{9}{16}''$ long } Fixing cover plate	2	237139	
33	Cork packing for rear main bearing cap	4	269854	
34	Oil return pipe in rear bearing cap	1	09178	
35	Stud for cylinder head	2	212332	
36	Drain tap for cylinder block	1	243237	
37	Joint washer for drain tap	1	2347	
38	Engine front support bracket complete L H	1	07095	
39	Engine front support bracket complete R H	1	07096	
40	Locker } Fixing brackets to cylinder block	2	235720	
41	Set bolt ($\frac{1}{2}''$ x $1\frac{3}{16}''$ long) } Fixing brackets to cylinder block	4	215488	

ENGINE AND CLUTCH ASSEMBLY does not include carburettor and fittings

cardiagn.com

CRANKSHAFT AND CYLINDER HEAD

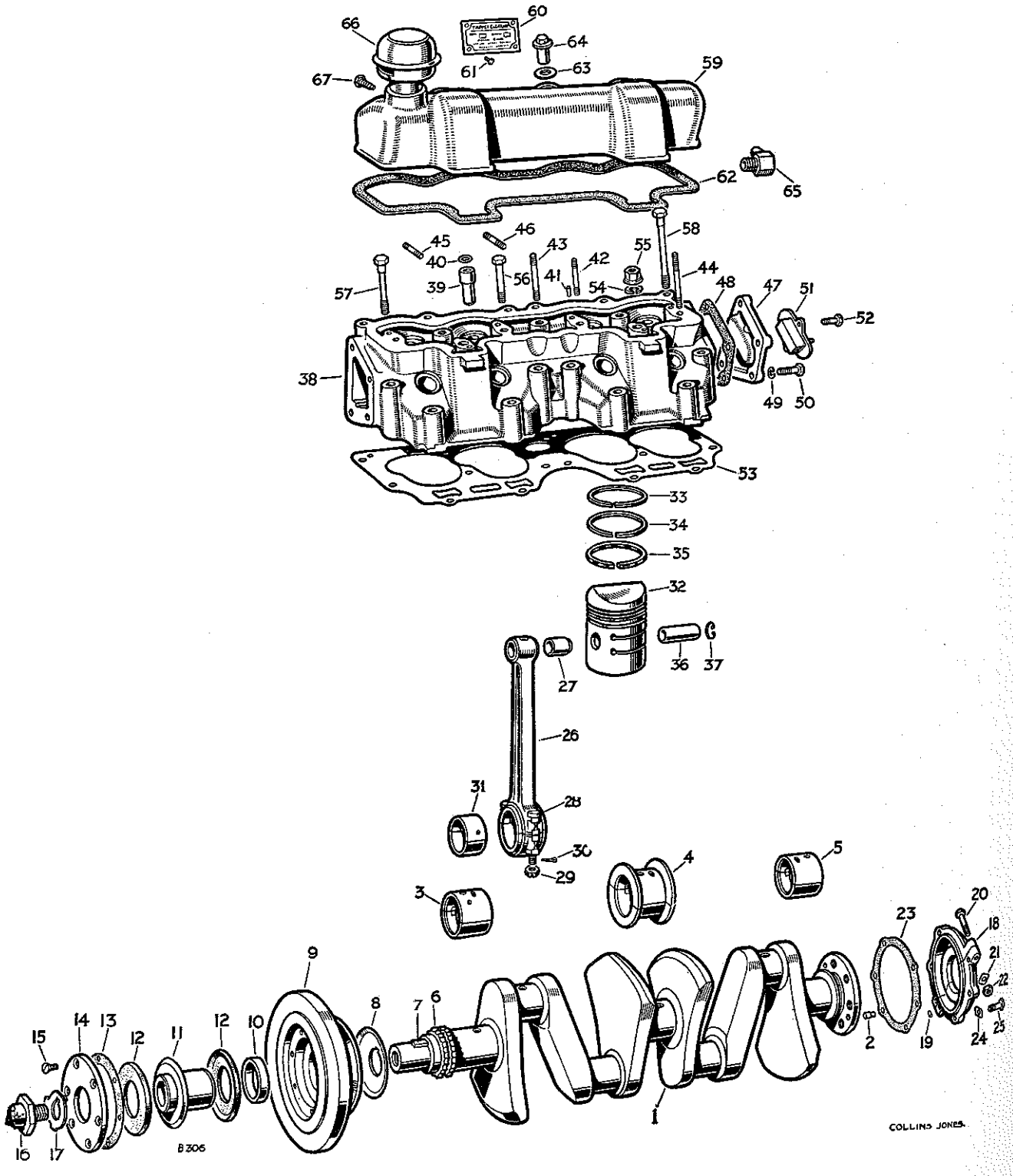

CRANKSHAFT AND CYLINDER HEAD

PLATE REF.	1 2 3 4 DESCRIPTION	Qty.	Part No.	REMARKS
1	CRANKSHAFT ASSEMBLY, STD.	1	212382	
	CRANKSHAFT ASSEMBLY, .015″ U.S.	1	217930	
	CRANKSHAFT ASSEMBLY, .030″ U.S.	1	217931	
	CRANKSHAFT ASSEMBLY, .040″ U.S.	1	217932	
2	Dowel for flywheel	1	6395	
3	Main bearing, front, Std.	1	217937	These part numbers cover bearing halves supplied in pairs, *i.e.*, top and bottom. Bearing halves are not supplied separately.
	Main bearing, front, .015″ U.S.	1	217943	
	Main bearing, front, .030″ U.S.	1	217949	
	Main bearing, front, .040″ U.S.	1	217955	
4	Main bearing, centre, Std.	1	217938	
	Main bearing, centre, .015″ U.S.	1	217944	
	Main bearing, centre, .030″ U.S.	1	217950	
	Main bearing, centre, .040″ U.S.	1	217956	
5	Main bearing, rear, Std.	1	217939	
	Main bearing, rear, .015″ U.S.	1	217945	
	Main bearing, rear, .030″ U.S.	1	217951	
	Main bearing, rear, .040″ U.S.	1	217957	
6	Chainwheel on crankshaft	1	59054	
7	Key locating chainwheel	1	52015	
8	Oil thrower on crankshaft	1	59053	
	VIBRATION DAMPER ASSEMBLY	1	215935	
9	DAMPER FLYWHEEL AND BUSH ASSEMBLY	1	215936	
10	Bush for flywheel	1	03188	
11	Driving flange	1	09017	
12	Rubber disc for damper	2	03017	
13	Shim	As required	03020	
14	Retaining plate	1	03018	
15	Set screw ($\frac{1}{4}$″ x $\frac{61}{64}$″ long) fixing plate to flywheel	6	03093	
16	Starting dog	1	215887	
17	Lock washer for starting dog	1	03092	
18	CRANKSHAFT OIL RETAINER CAP ASSEMBLY	1	212383	
19	Dowel (Fixing halves together)	2	09209	
20	Bolt ($\frac{1}{4}$″ x $1\frac{1}{2}$″ long) (Fixing halves together)	2	250517	
21	Locker (Fixing halves together)	2	2500	
22	Nut ($\frac{1}{4}$″) (Fixing halves together)	2	2823	
23	Joint washer (Fixing oil retainer cap to cylinder block)	1	09089	
24	Locker (Fixing oil retainer cap to cylinder block)	6	2500	
25	Set bolt ($\frac{1}{4}$″ x $\frac{61}{64}$″ long) (Fixing oil retainer cap to cylinder block)	6	237142	
26	CONNECTING ROD ASSEMBLY	4	212366	
27	Gudgeon pin bush	4	217846	
28	Special bolt (Fixing connecting rod cap)	8	07884	
29	Castle nut ($\frac{3}{8}$″) (Fixing connecting rod cap)	8	2102	
30	Split pin fixing connecting rod cap	8	2392	
31	Connecting rod bearing halves, Std.	8	237272	
	Connecting rod bearing halves, .015″ U.S.	8	237926	
	Connecting rod bearing halves, .030″ U.S.	8	237928	
	Connecting rod bearing halves, .040″ U.S.	8	237929	

cardiagn.com

CRANKSHAFT AND CYLINDER HEAD

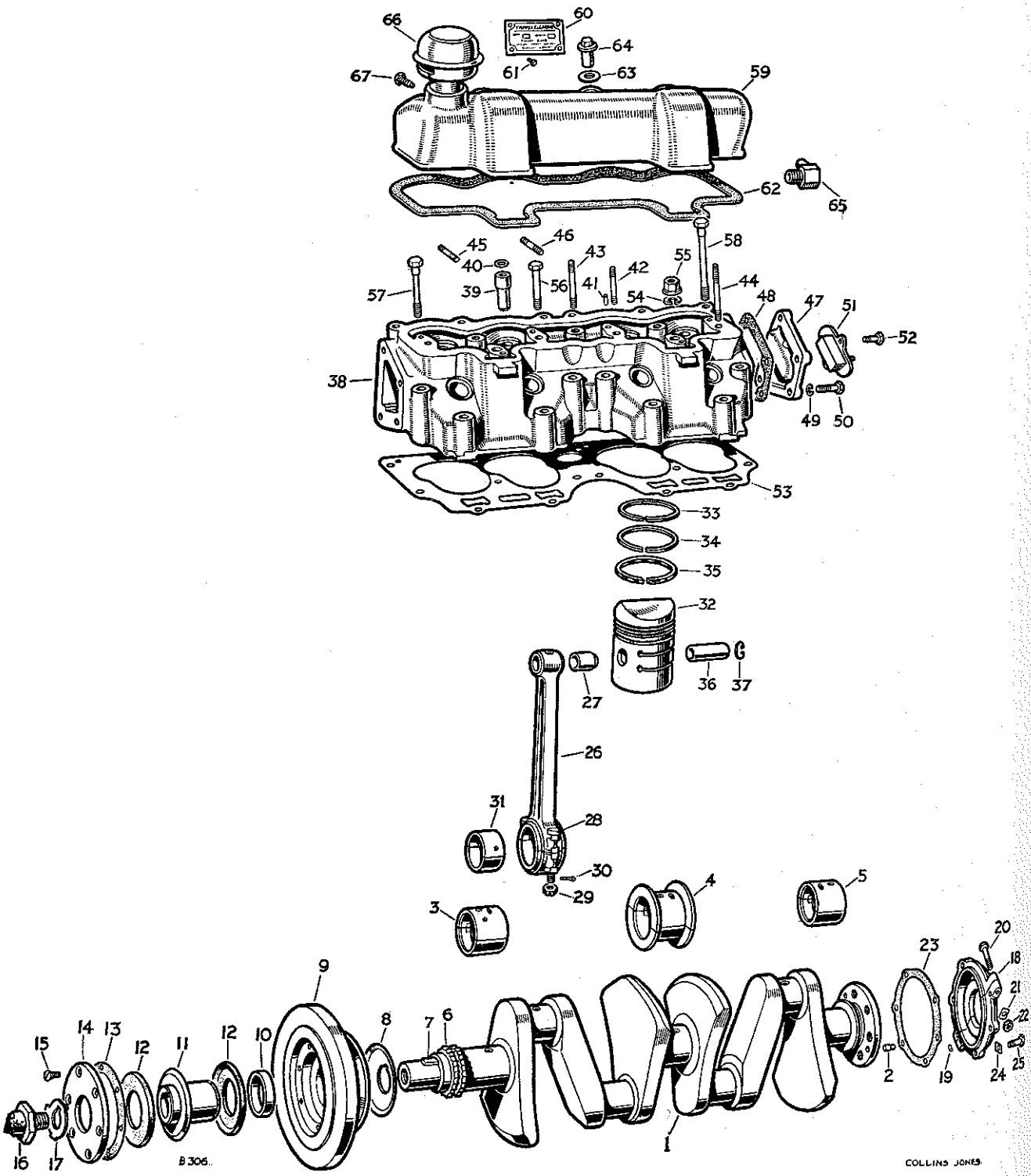

PLATE REF.

32
33
34
35
36
37
38
39
40
41
42
43
44
45
46
47
48
49
50
51
52
53
54
55
56
57
58

CRANKSHAFT AND CYLINDER HEAD

PLATE REF.	1 2 3 4 DESCRIPTION	Qty.	Part No.	REMARKS
32	PISTON ASSEMBLY, Std.	4	246346	
	PISTON ASSEMBLY, .010″ O.S.	4	242576	
	PISTON ASSEMBLY, .020″ O.S.	4	242577	
	PISTON ASSEMBLY, .030″ O.S.	4	242578	
	PISTON ASSEMBLY, .040″ O.S.	4	242579	
33	Piston ring, compression, Std.	8	231155	
	Piston ring, compression, .010″ O.S.	8	236173	
	Piston ring, compression, .020″ O.S.	8	236174	
	Piston ring, compression, .030″ O.S.	8	236175	
	Piston ring, compression, .040″ O.S.	8	236176	
34	Stepped scraper ring, Std.	4	234816	
	Stepped scraper ring, .010″ O.S.	4	236178	
	Stepped scraper ring, .020″ O.S.	4	236179	
	Stepped scraper ring, .030″ O.S.	4	236180	
	Stepped scraper ring, .040″ O.S.	4	236181	
35	Maxilite scraper ring, Std.	4	234817	
	Maxilite scraper ring, .010″ O.S.	4	236183	
	Maxilite scraper ring, .020″ O.S.	4	236184	
	Maxilite scraper ring, .030″ O.S.	4	236185	
	Maxilite scraper ring, .040″ O.S.	4	236186	
36	Gudgeon pin, Std.	4	231154	
	Gudgeon pin, .001″ O.S.	4	236188	
	Gudgeon pin, .003″ O.S.	4	236189	
37	Circlip for gudgeon pin	8	03170	
38	CYLINDER HEAD ASSEMBLY	1	233430	
39	Valve guide, inlet	4	266924	
40	Rubber ring for inlet valve guide	4	233419	
41	Dowel, locating rocker brackets	6	59059	
42	Stud, short } For rocker	3	9499	
43	Stud, long } brackets	1	3604	
44	Stud for top rocker cover ($2\frac{15}{16}$″ long)	3	6318	} Alternative, check before ordering
	Stud for top rocker cover ($3\frac{7}{16}$″ long)	3	6316	
45	Stud } For	5	212098	6 off from Engines numbered 26100201 onwards
46	Stud for centre branch } inlet	4	243531	
	Stud for breather steady } manifold	1	57126	Engines numbered 26100001 to 26100200
47	Rear end cover for cylinder head	1	213810	
48	Joint washer for rear end cover	1	213811	
49	Spring washer } Fixing rear end cover	4	3075	
50	Set bolt ($\frac{5}{16}$″ x $\frac{29}{32}$″ long) } to cylinder head	4	237161	
51	Thermostat switch for choke warning light	1	213574	
52	Set bolt (2 B.A. x $\frac{13}{64}$″ long) fixing switch	2	237119	
53	Cylinder head gasket	1	231046	
54	Spring washer	2	3077	
55	Special nut } Fixing cylinder	2	212702	
56	Special set bolt, short } head to	4	237345	
57	Special set bolt, medium } cylinder block	4	212334	
58	Special set bolt, long	6	212333	

cardiagn.com

CRANKSHAFT AND CYLINDER HEAD

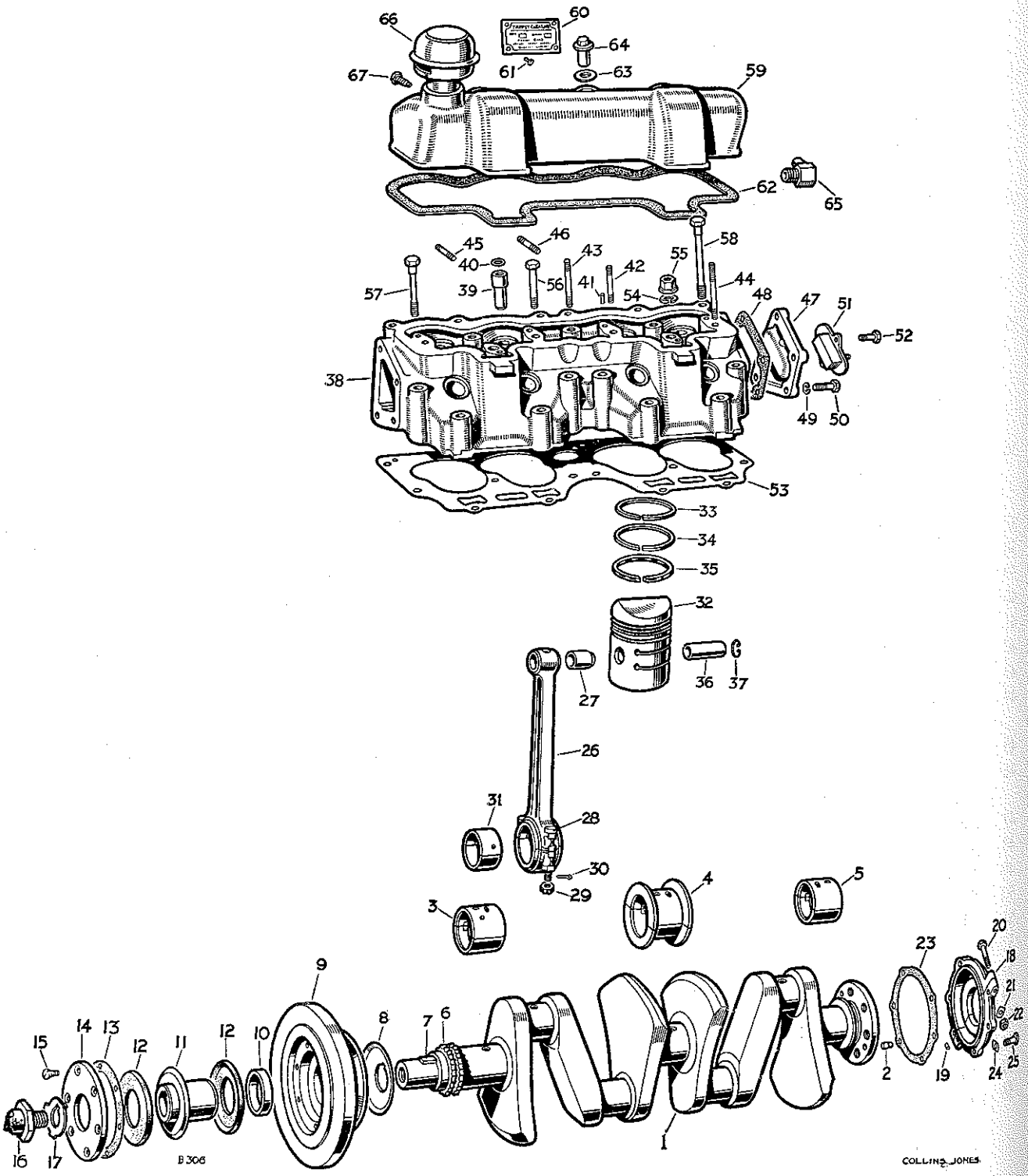

PLATE REF.	
	I
59	I
60	
61	
62	J
63	F
64	S
	S
65	E
66	E
67	S

cardiagn.com

CRANKSHAFT AND CYLINDER HEAD

PLATE REF.	1 2 3 4 DESCRIPTION		Qty.	Part No.	REMARKS
	ROCKER COVER, TOP, ASSEMBLY		1	214409	Engines numbered 26100001 to 26100200
59	ROCKER COVER, TOP, ASSEMBLY		1	246340	Engines numbered 26100201 onwards
60	Tappet clearance plate		1	213245	
61	Drive screw fixing plate		4	73350	
62	Joint washer for top rocker cover		1	267781	
63	Fibre washer	Fixing top rocker cover	3	3055	
64	Special nut, overall length 1.530"		3	212278	Alternative, check before ordering
	Special nut, overall length .937"		3	216627	
65	Breather adaptor complete		1	234613	Engines numbered 26100001 to 26100200
66	Breather filter for top cover		1	230996	Engines numbered 26100201 onwards
67	Set screw fixing breather		1	231144	

cardiagn.com

VALVE GEAR

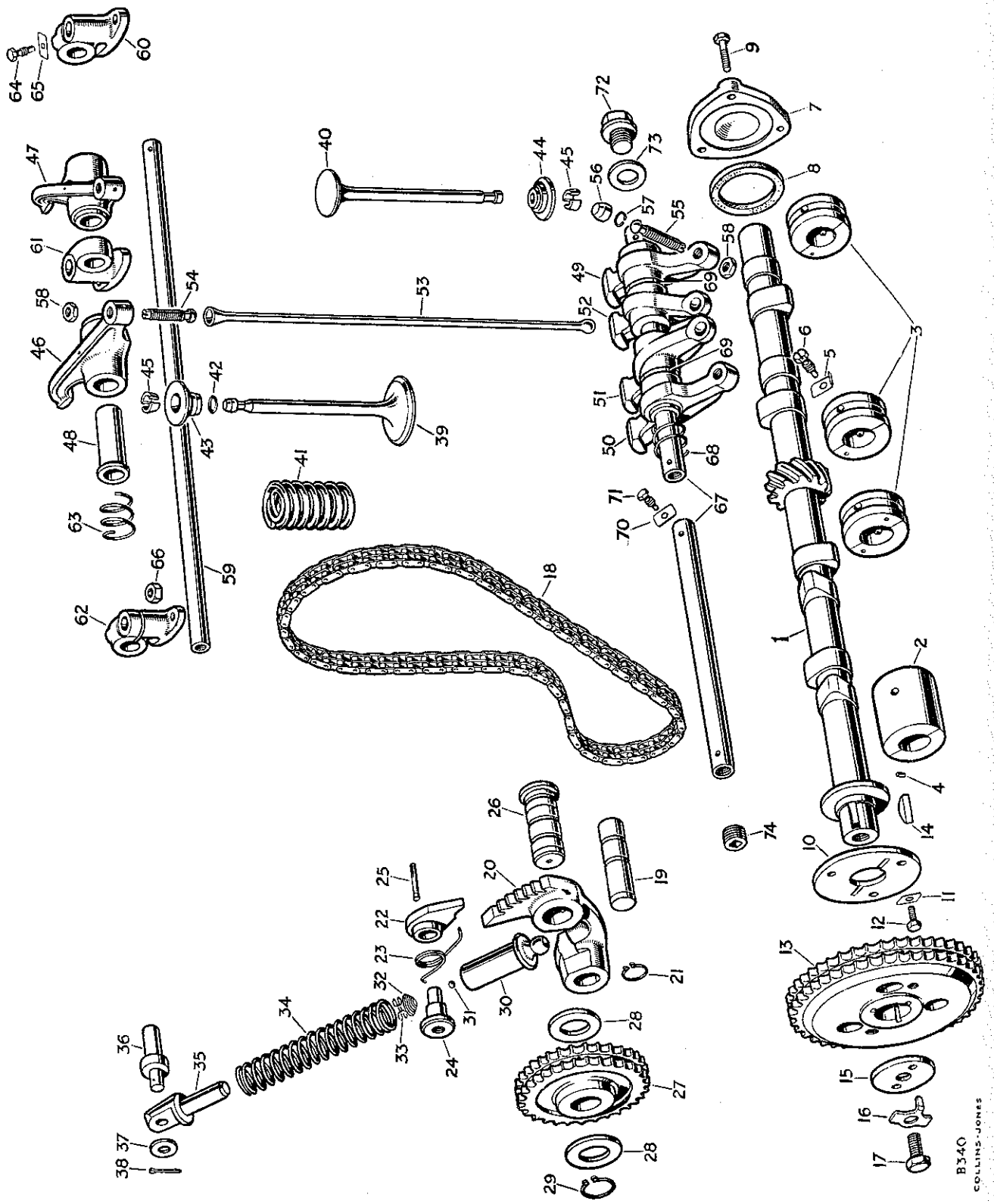

VALVE GEAR

PLATE REF.	1 2 3 4 DESCRIPTION	Qty.	Part No.	REMARKS
1	Camshaft	1	269125	
2	Bearing complete for camshaft, front	1	09091	
3	Bearing complete for camshaft, centre and rear	3	233072	
4	Dowel for camshaft bearing	8	09208	
5	Locking plate } Fixing camshaft bearings	4	09205	
6	Special set screw } to cylinder block	4	213251	
7	Rear end cover for camshaft	1	219914	
8	Joint washer for cover	1	219913	
9	Set bolt ($\frac{1}{4}''$ x $\frac{5}{8}''$ long) fixing cover to block	3	250510	
10	Thrust plate for camshaft	1	09092	
11	Locker } Fixing thrust plate	3	2500	
12	Set bolt ($\frac{1}{4}''$ x $\frac{5}{8}''$ long) } to cylinder block	3	250510	
13	Chainwheel for camshaft	1	09023	
14	Key locating camshaft chainwheel	1	230313	
15	Retaining washer } Fixing	1	09093	
16	Locker } chain wheel	1	09210	
17	Set bolt ($\frac{3}{8}''$ x $\frac{11}{32}''$ long) } to camshaft	1	215762	
18	Camshaft chain ($\frac{3}{8}''$ pitch x 78 links)	1	09156	
19	Pivot pin for chain adjuster arm	1	212365	
20	Adjuster arm for timing chain	1	212363	
21	Circlip fixing adjuster arm to pivot pin	1	09129	
22	Pawl for tensioner arm	1	213600	
23	Pawl spring	1	213601	
24	Pawl pin	1	213602	
25	Anchor pin for spring	1	214131	
26	Spindle for timing chain adjuster idler wheel	1	212364	
27	Idler wheel for timing chain	1	09075	
28	Steel washer } Fixing idler wheel	2	09126	
29	Circlip } to spindle	1	09128	
30	CYLINDER ASSEMBLY FOR TIMING CHAIN ADJUSTER	1	265331	
31	Steel ball ($\frac{3}{16}''$) for non-return valve	1	3746	
32	Spring retaining ball in cylinder	1	212339	
33	Retainer for steel ball	1	219489	
34	Spring } For timing	1	212340	
35	Piston } chain adjuster	1	219504	
36	Pivot pin for chain adjuster piston	1	212341	
37	Steel washer } Fixing chain adjuster	1	210679	
38	Split pin } piston to pivot pin	1	2555	
39	Inlet valve	4	233427	
40	Exhaust valve	4	264137	
41	Valve spring, inner and outer	8	217936	
42	Rubber sealing ring for valve, inlet	4	233419	
43	Valve spring cup, inlet	4	212137	
44	Valve spring cup exhaust	4	212137	
45	Split cone for valve, pair	8	09906	

cardiagn.com

VALVE GEAR

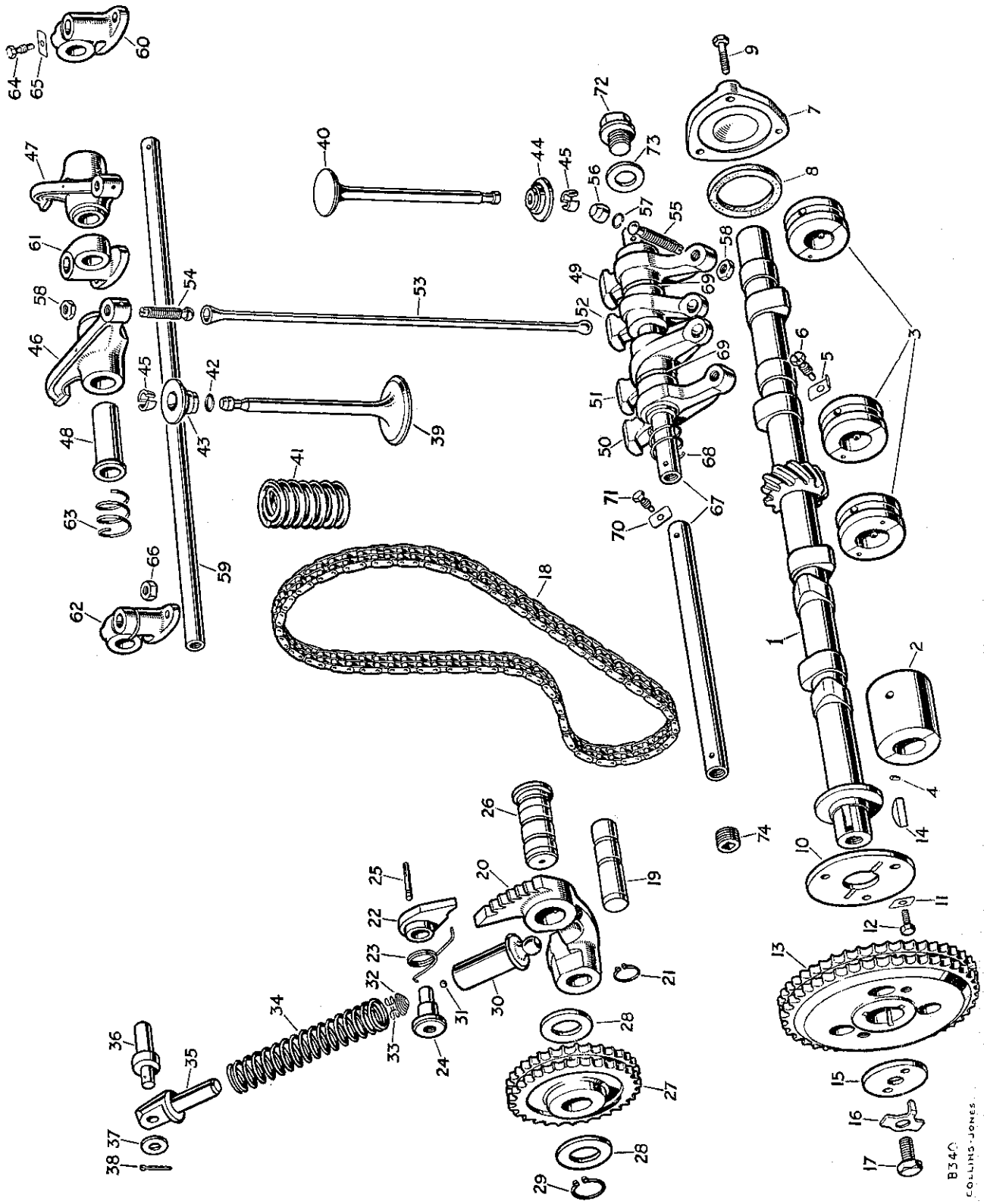

VALVE GEAR

PLATE REF.	1 2 3 4	DESCRIPTION	Qty.	Part No.	REMARKS
46		VALVE ROCKER ASSEMBLY, INLET L.H	2	214351	
47		VALVE ROCKER ASSEMBLY, INLET R.H.	2	214350	
48		Bush for inlet valve rocker	4	214348	
49		Valve rocker, exhaust L.H	2	239547	
50		Valve rocker, exhaust R.H	2	239546	
51		Inlet cam follower L.H	2	239545	
52		Inlet cam follower R.H.	2	239544	
53		Tappet push rod, inlet	4	09122	
54		Tappet adjusting screw, inlet	4	236151	
55		TAPPET ADJUSTING SCREW, ASSEMBLY, EXHAUST	4	212350	
56		Cap for exhaust tappet adjusting screw	4	212160	
57		Circlip fixing cap	4	212161	
58		Locknut for tappet adjusting screw	8	2842	
59		Valve rocker shaft, top	1	231057	
60		Rocker bracket, oil feed, top	1	212328	
61		Rocker bracket, intermediate, top	2	212329	
62		Rocker bracket, clamping, top	3	212330	
63		Spring for rocker shaft, top	4	09143	
64		Locating screw } For rocker shaft	1	09004	
65		Locating plate } at oil feed bracket	1	09005	
66		Nut ($\frac{5}{16}$") fixing rocker bracket to cylinder head	4	2828	
67		Valve rocker shaft, bottom	2	239089	
68		Spring for rocker shaft, bottom	4	09144	
69		Thrust washer for rocker shaft, bottom	4	09159	
70		Locating plate } Fixing bottom rocker	2	09005	
71		Locating screw } shafts to cylinder block	2	09004	
72		End plug, rear } For	1	3088	
73		Fibre washer for rear plug } bottom	1	3055	
74		End plug, front } rocker shaft	1	12455	

cardiagn.com

OIL PUMP

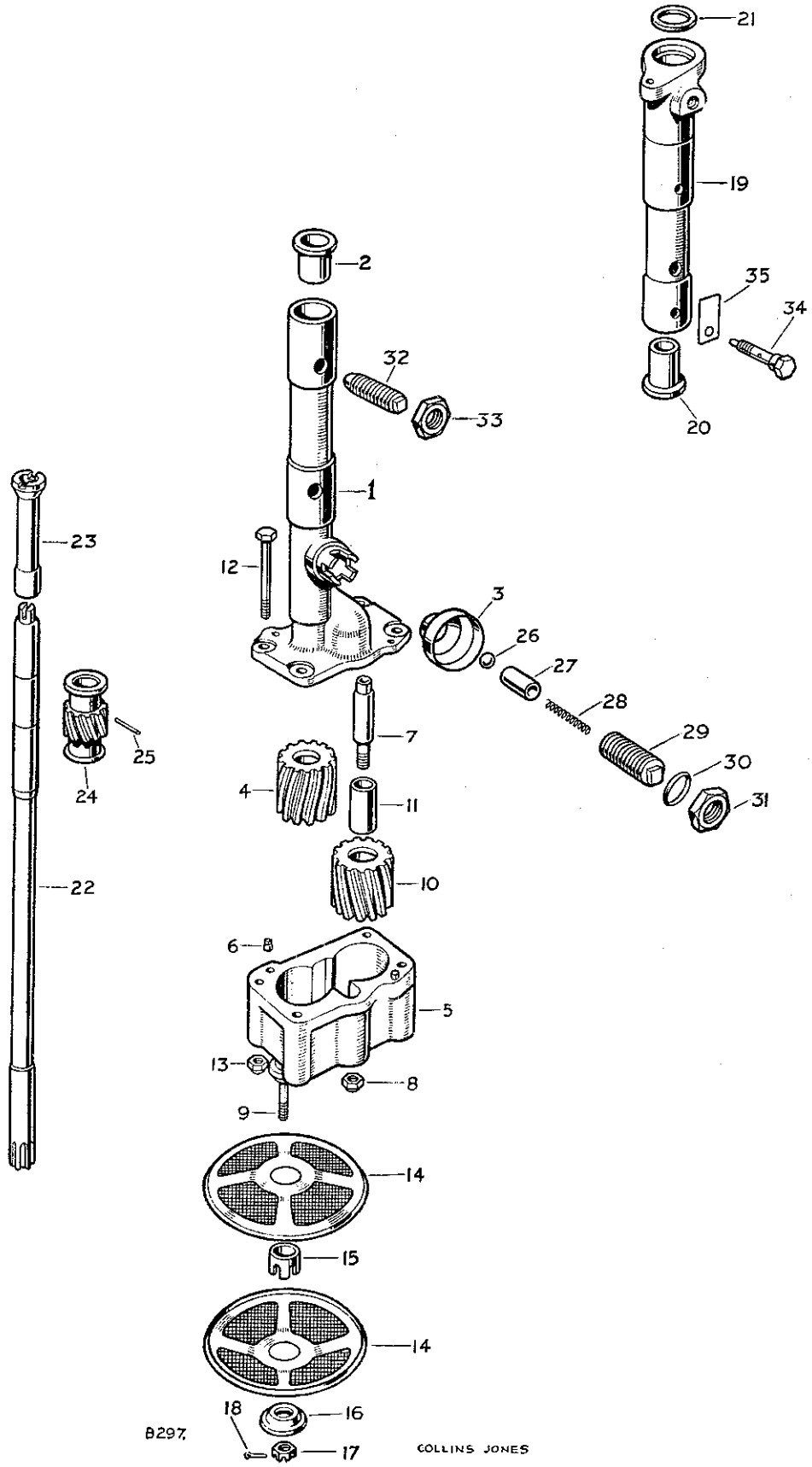
21
19
35
34
20
2
32
33
1
23
12
3
26
27
28
29
30
31
7
25
24
4
11
10
22
6
8
5
13
8
9
14
15
14
18
16
17
B297
COLLINS JONES

OIL PUMP

PLATE REF. 1 2 3 4	DESCRIPTION	Qty.	Part No.	REMARKS
	OIL PUMP ASSEMBLY	1	234310	
1	OIL PUMP BODY ASSEMBLY	1	234312	
2	Bush for drive shaft	1	212309	
3	Oil pump shield	1	09225	
4	Oil pump gear, driver	1	09027	
5	OIL PUMP COVER ASSEMBLY	1	234296	
6	Dowel locating body	2	52710	
7	Spindle for idler wheel	1	09050	
8	Self-locking nut ($\frac{3}{8}$") fixing spindle	1	50526	
9	Stud for oil strainer	1	234291	
10	OIL PUMP GEAR IDLER ASSEMBLY	1	212375	
11	Bush for idler gear	1	09049	
12	Bolt ($\frac{5}{16}$" x $2\frac{1}{2}$" long) Fixing cover	4	250532	
13	Self-locking nut ($\frac{5}{16}$") to body	4	50525	
14	Oil strainer for pump	2	52182	
15	Distance piece for oil strainer	1	266900	
16	Cup washer for strainer	1	52189	
17	Castle nut ($\frac{1}{4}$") Fixing oil	1	251600	
18	Split pin strainer to pump	1	2422	
19	DISTRIBUTOR HOUSING ASSEMBLY	1	214047	
20	Bush for drive shaft	1	09025	
21	Cork washer for housing	1	52278	
22	Oil pump drive shaft	1	235083	
23	Drive shaft for distributor	1	267829	
24	Oil pump driving gear	1	212308	
25	Taper pin, fixing gear to shaft	1	3005	
26	Steel ball	1	01035	
27	Plunger	1	09038	
28	Spring For oil pressure	1	07488	
29	Adjusting screw release valve	1	09037	
30	Washer	1	230508	
31	Locknut	1	12028	
32	Special set screw Fixing oil pump	1	09039	
33	Locknut to cylinder block	1	2069	
34	Oil feed bolt, locating distributor housing	1	09052	
35	Locker for bolt	1	2504	

cardiagn.com

FRONT COVER, SIDE COVER AND SUMP

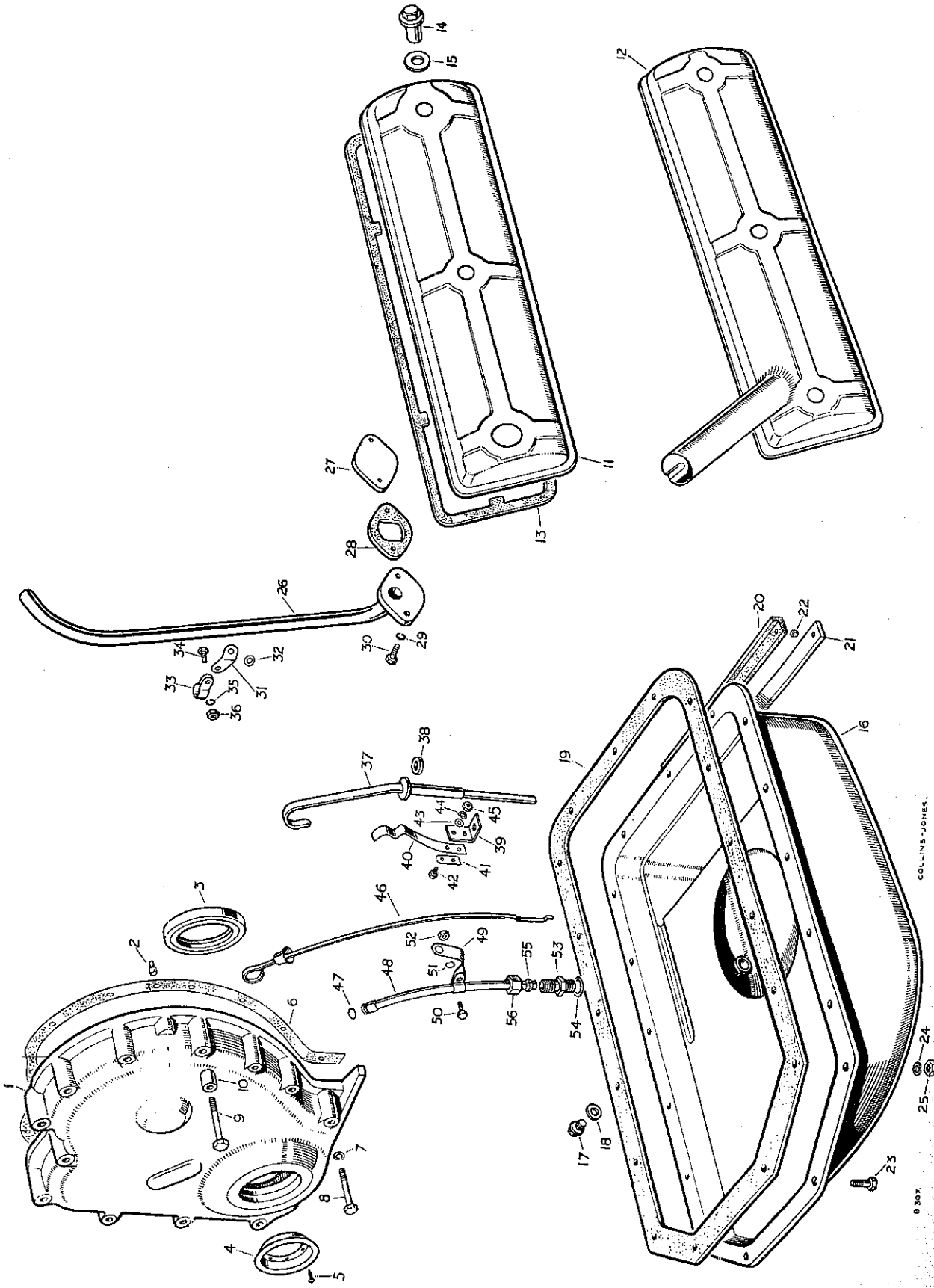

FRONT COVER, SIDE COVER AND SUMP

PLATE REF.	1 2 3 4 DESCRIPTION	Qty.	Part No.	REMARKS
1	FRONT COVER ASSEMBLY	1	236018	
2	Dowel locating front cover	2	6395	
3	Oil seal for front cover	1	213744	
4	Mud excluder	1	236011	
5	Hammer drive screw fixing excluder	8	3936	
6	Joint washer for front cover	1	09102	
7	Spring washer } Fixing front	11	3075	
8	Set bolt ($\frac{5}{16}$" x $1\frac{29}{32}$" long } cover and	10	250530	
9	Set bolt ($\frac{5}{16}$" x $2\frac{3}{16}$" long) } water pipe to	1	250531	
10	Distance piece } cylinder block	1	59155	
11	Rocker cover, side	1	216680	Engines numbered 26100001 to 26100200
12	Rocker cover, side	1	236003	Engines numbered 26100201 onwards
13	Joint washer for rocker cover	1	267779	
14	Special nut fixing side rocker cover	2	216627	3 off from Engines
15	Sealing washer for nut	2	242988	numbered 26100201 onwards
16	Crankcase sump	1	240789	
17	Drain plug for crankcase sump	1	3088	
18	Washer for drain plug	1	230507	
19	Joint washer for crankcase sump	1	09067	
20	Rubber seal } For	1	231480	
21	Packing strip } rear end of	1	231479	
22	Distance piece } crankcase sump	3	231478	
23	Set bolt ($\frac{5}{16}$" Whit x $\frac{19}{32}$" long) } Fixing sump	2	215761	
24	Spring washer } to cylinder	17	3075	
25	Nut ($\frac{5}{16}$") } block	15	2828	
26	Breather pipe complete	1	232454	Engines numbered 26100001 to 26100200
27	Cover plate for breather aperture	1	236435	Engines numbered 26100201 onwards
28	Joint washer } Fixing breather pipe	1	214058	
29	Spring washer } or cover plate to	2	3075	
30	Set bolt ($\frac{5}{16}$" x $\frac{13}{16}$" long) } cylinder block	2	237159	
31	Steady bracket for breather pipe	1	218835	
32	Distance piece for bracket	1	2220	
33	Clip for breather pipe steady bracket	1	218913	
34	Bolt (2 B.A. x $\frac{1}{2}$" long) }	1	234603	
35	Spring washer } Fixing clip to bracket	1	3073	
36	Nut (2 B.A.) }	1	2247	
37	Oil level dipstick	1	233460	
38	Washer for dipstick	1	231848	Engines numbered 26100001 to 26100200
39	Bracket for dipstick locking spring	1	231844	
40	Locking spring for dipstick	1	231842	
41	Stiffening plate for locking spring	1	231854	
42	Bolt (2 B.A. x $\frac{7}{16}$" long) }	2	234603	
43	Plain washer } Fixing spring	2	2678	
44	Spring washer } to bracket	2	3073	
45	Nut (2 B.A.) }	2	2247	

SEE ALSO PAGE 23

cardiagn.com

OIL FILTER, PIPES AND OIL FILLER

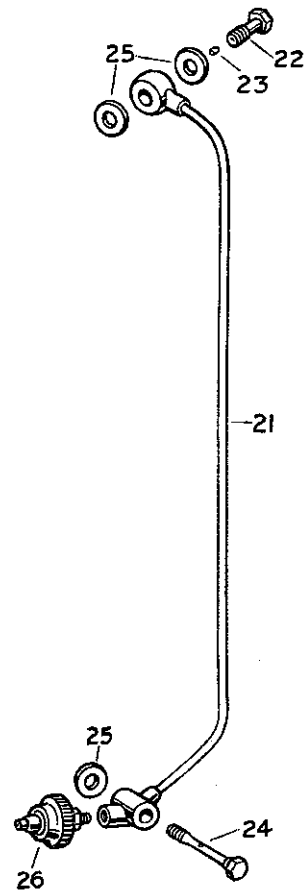

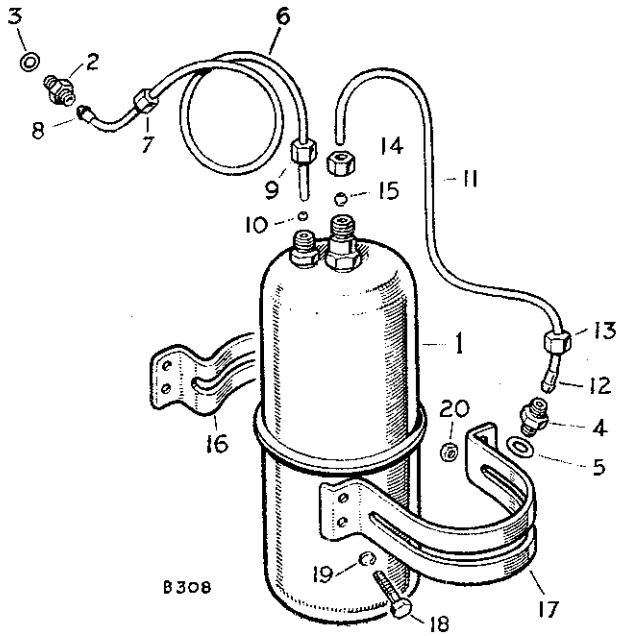

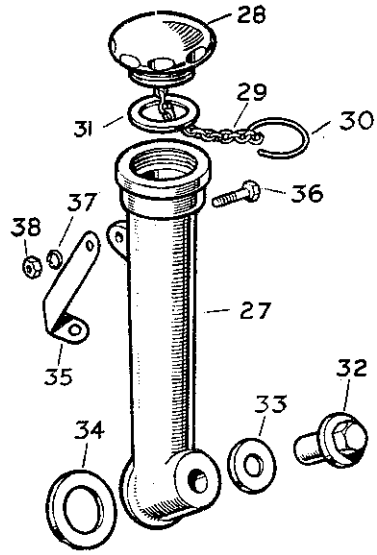

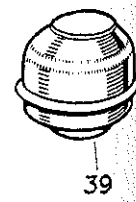

PLATE REF.	
1	O
	Ir
	O
2	U
3	Jc
4	U
5	Jc
6	Ir
7	
8	
9	N
10	O
11	O
12	
13	N
14	N
15	O
16	B
17	St
18	Sc
19	Sp
20	N
21	O
22	B
23	
24	B
25	Jc
26	O
27	O
28	O
29	
30	
31	Jc
32	Sp
33	Sc
34	Sc
35	B
36	B
37	Sp
38	N
39	O
46	O
47	Sc
48	T
49	B
50	B
51	Sp
52	N
53	D
54	W
55	O
56	U

Copyright 2003

OIL FILTER, PIPES AND OIL FILLER

PLATE REF.	1 2 3 4 DESCRIPTION	Qty.	Part No.	REMARKS
1	Oil filter complete	1	216322	
	Inlet union } For	1	230168	
	Outlet union } oil filter	1	230169	
2	Union for inlet pipe	1	3780	
3	Joint washer for inlet union	1	210640	
4	Union for outlet pipe	1	3057	
5	Joint washer for outlet union	1	215802	
6	Inlet pipe complete for oil filter	1	234091	
7	Nut }	1	3779	
8	Nipple } For	1	3792	
9	Nut } inlet pipe	1	230171	
10	Olive }	1	230172	
11	Outlet pipe complete for oil filter	1	234089	
12	Nipple }	1	2728	
13	Nut } For	1	2729	
14	Nut } outlet pipe	1	230170	
15	Olive }	1	230173	
16	Bracket } For	1	214970	
17	Strap } oil filter	1	214971	
18	Set bolt ($\frac{1}{4}$" x $\frac{5}{8}$" long) }	4	215053	
19	Spring washer } Fixing oil filter	4	3074	
20	Nut ($\frac{1}{4}$") }	1	2823	
21	Oil pipe complete to cylinder head	1	267981	
22	Banjo bolt, oil pipe to cylinder head	1	265047	
23	Meter plug for banjo bolt	1	212023	
24	Banjo bolt, oil pipe to cylinder block	1	233520	
25	Joint washer for banjo bolts	4	231575	
26	Oil pressure switch	1	240526	
27	Oil filler pipe	1	218799	
28	OIL FILLER CAP AND CHAIN ASSEMBLY	1	230268	
29	Retaining chain for oil filler cap	1	230262	
30	Spring ring fixing chain to filler pipe	1	230259	
31	Joint washer for oil filler cap	1	213966	
32	Special nut } Fixing oil filler	1	218831	Engines numbered 26100001 to 26100200
33	Sealing washer, outer } pipe and side	1	216709	
34	Sealing washer, inner } rocker cover	2	212173	
35	Bracket for oil filler pipe	1	218828	
36	Bolt ($\frac{1}{4}$" x $\frac{3}{4}$" long) } Fixing	1	215054	
37	Spring washer } bracket to	1	3074	
38	Nut ($\frac{1}{4}$") } oil filler pipe	1	2823	
39	Oil filler cap and breather filter	1	236406	Engines numbered 26100201 onwards
	FRONT COVER, SIDE COVER AND SUMP			
46	Oil level rod	1	237563	
47	Sealing ring for rod	1	210517	
48	Tube for oil level rod	1	236922	
49	Bracket for oil level rod tube	1	236393	
50	Bolt (2 B.A. x $\frac{1}{2}$" long) }	1	234603	
51	Spring washer } Fixing bracket	1	3073	Engines numbered 26100201 onwards
52	Nut (2 B.A.) }	1	2247	
53	Double-ended union }	1	236060	
54	Washer } Fixing tube to	1	231576	
55	Olive } cylinder block	1	236408	
56	Union nut }	1	236407	

cardiagn.com

WATER PUMP AND THERMOSTAT

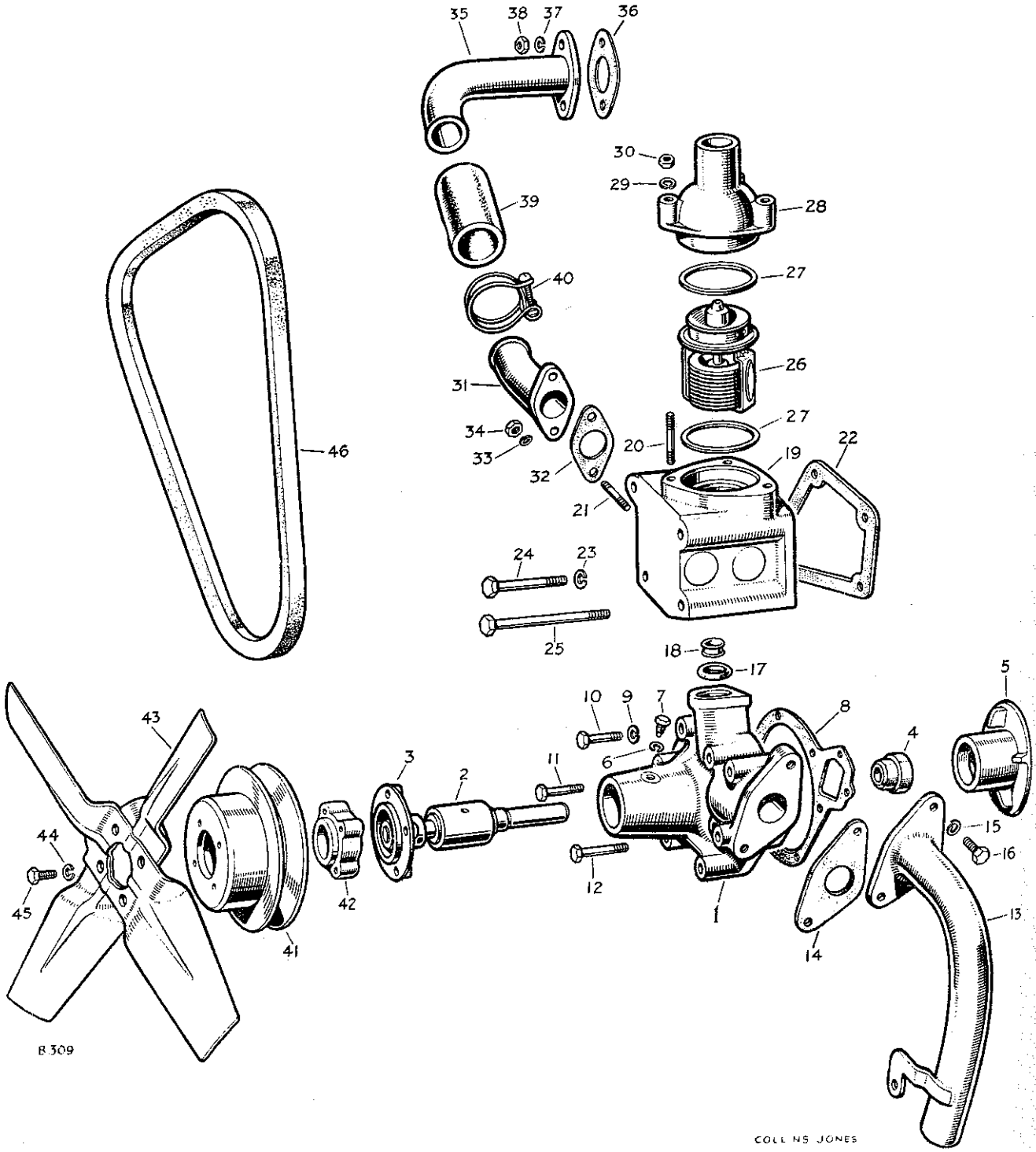

WATER PUMP AND THERMOSTAT

PLATE REF.	1 2 3 4 DESCRIPTION	Qty.	Part No.	REMARKS
	WATER PUMP ASSEMBLY	1	241884	
1	Water pump casing complete	1	214789	Complete pump 241884 supplied in lieu.
2	Pump spindle and bearing	1	213695	
3	Hub for fan	1	213698	
	Impeller and seal unit	1	268598	
4	Carbon ring and seal unit	1	231143	
5	Impeller for pump	1	233440	Supply 268598 in lieu.
6	Spring washer } locating	1	3074	
7	Set bolt ($\frac{1}{4}$" x $\frac{7}{8}$" long) } bearing casing	1	211064	
8	Joint washer for water pump	1	09118	
9	Spring washer }	8	3074	
10	Set bolt ($\frac{1}{4}$" x $1\frac{1}{2}$" long) } Fixing water pump	6	250517	
11	Set bolt ($\frac{1}{4}$" x $1\frac{3}{4}$" long) } to cylinder block	1	235570	
12	Set bolt ($\frac{1}{4}$" x $2\frac{1}{4}$" long) }	1	237150	
13	Inlet pipe for water pump	1	217272	
14	Joint washer for inlet pipe	1	213724	
15	Spring washer } Fixing pipe to	2	3075	
16	Set bolt ($\frac{5}{16}$" Whit. x $\frac{11}{16}$" long) } water pump	2	215647	
17	Rubber joint ring } Connecting water pump	1	09170	
18	Copper tube } to thermostat housing	1	09197	
19	THERMOSTAT HOUSING ASSEMBLY	1	263670	
20	Stud for outlet pipe	3	212042	
21	Stud for inlet pipe	2	212104	
22	Joint washer for thermostat housing	1	213811	
23	Spring washer } Fixing thermostat	1	3075	
24	Set bolt ($\frac{5}{16}$"x $2\frac{29}{32}$" long) } housing to	1	215180	
25	Bolt ($\frac{5}{16}$" x $3\frac{11}{16}$" long) } cylinder head	3	215191	
26	Thermostat	1	233170	
27	Fibre washer for thermostat	2	01645	
28	Water outlet pipe, thermostat to radiator	1	263607	
29	Spring washer } Fixing outlet pipe	3	3074	
30	Nut($\frac{1}{4}$") } to thermostat	3	2823	
31	Water inlet elbow to thermostat	1	263630	
32	Joint washer for inlet elbow	1	210419	
33	Spring washer } Fixing elbow to	2	3074	
34	Nut ($\frac{1}{4}$") } thermostat housing	2	2823	
35	Water outlet pipe from manifold	1	272789	
36	Joint washer for outlet pipe	1	210419	
37	Spring washer } Fixing water outlet	2	3074	
38	Nut ($\frac{1}{4}$") } pipe to manifold	2	2823	
39	Rubber hose } Connecting water pipe	1	212345	
40	Clip for hose } to inlet elbow	2	50320	
41	Fan pulley	1	230492	
42	Distance piece for fan pulley	1	233802	
43	Fan blade	1	218203	
44	Spring washer } Fixing fan blade	4	3074	
45	Set bolt ($\frac{1}{4}$" x $1\frac{29}{64}$" long) } and pulley to hub	4	250517	
46	Fan and dynamo belt	1	218576	

cardiagn.com

CARBURETTOR

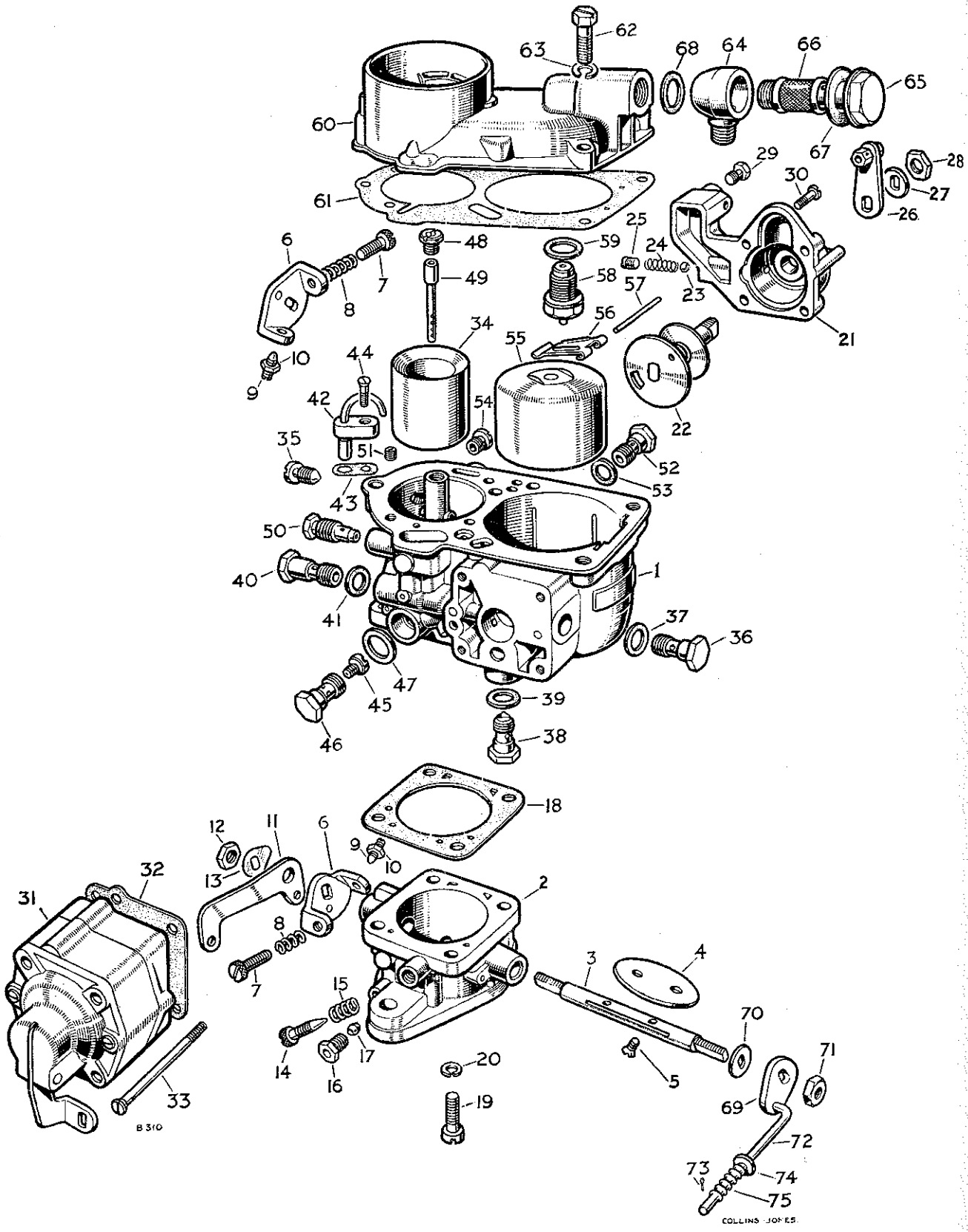

CARBURETTOR

PLATE REF.	1 2 3 4	DESCRIPTION	Qty.	Part No.	REMARKS
		CARBURETTOR COMPLETE	1	237773	Carburettor and fittings are not included in the engine assembly
1		Carburettor body only	1	261584	
2		Throttle chamber only	1	260700	
3		Spindle for throttle	1	260702	
4		Butterfly for throttle	1	260704	
5		Special screw fixing butterfly	2	260138	
6		Plate, throttle abutment	1	260139	
7		Special screw } For slow running	1	260140	
8		Spring } adjustment	1	260141	
9		Special screw } For throttle	1	260142	
10		Locknut } stop	1	260143	
11		Throttle lever	1	243920	
12		Nut fixing throttle lever	1	260159	
13		Lockwasher for nut	1	261594	
14		Special screw } For mixture	1	260146	
15		Spring } control	1	260141	
16		Screwed union } For suction	1	260707	
17		Olive } pipe	1	260708	
18		Joint washer for throttle chamber	1	260754	
19		Special screw } Fixing chamber to	4	261583	
20		Spring washer } carburettor body	4	260148	
21		Starter body	1	261580	
22		Starter valve complete	1	261581	
23		Ball } For starter	1	260155	
24		Spring } valve	1	260156	
25		Plug retaining starter valve spring	1	261508	
26		Lever for starter	1	261582	
27		Special washer for lever	1	261410	
28		Nut fixing starter lever	1	260159	
29		Special bolt fixing starter cable	2	260152	
30		Special screw fixing starter body	4	262313	
31		Accelerator pump complete	1	261562	
		Diaphragm for pump	4	243394	
32		Joint washer for pump	1	260739	
33		Special screw fixing pump	4	260737	
34		Choke tube (25)	1	262659	
35		Special screw fixing choke tube	1	260163	
36		Jet economy (50)	1	261420	
37		Fibre washer for jet	1	260734	
38		Non-return valve	1	260765	
39		Fibre washer for valve	1	260734	
40		Jet (75) accelerator pump	1	262448	
41		Fibre washer for jet	1	260734	
42		Pump injector	1	260732	
43		Joint washer for pump injector	1	261570	
44		Special screw fixing injector	1	260767	
45		Main jet (115)	1	260173	

SEE PAGE 29 FOR SUB-STANDARD JETS

cardiagn.com

CARBURETTOR

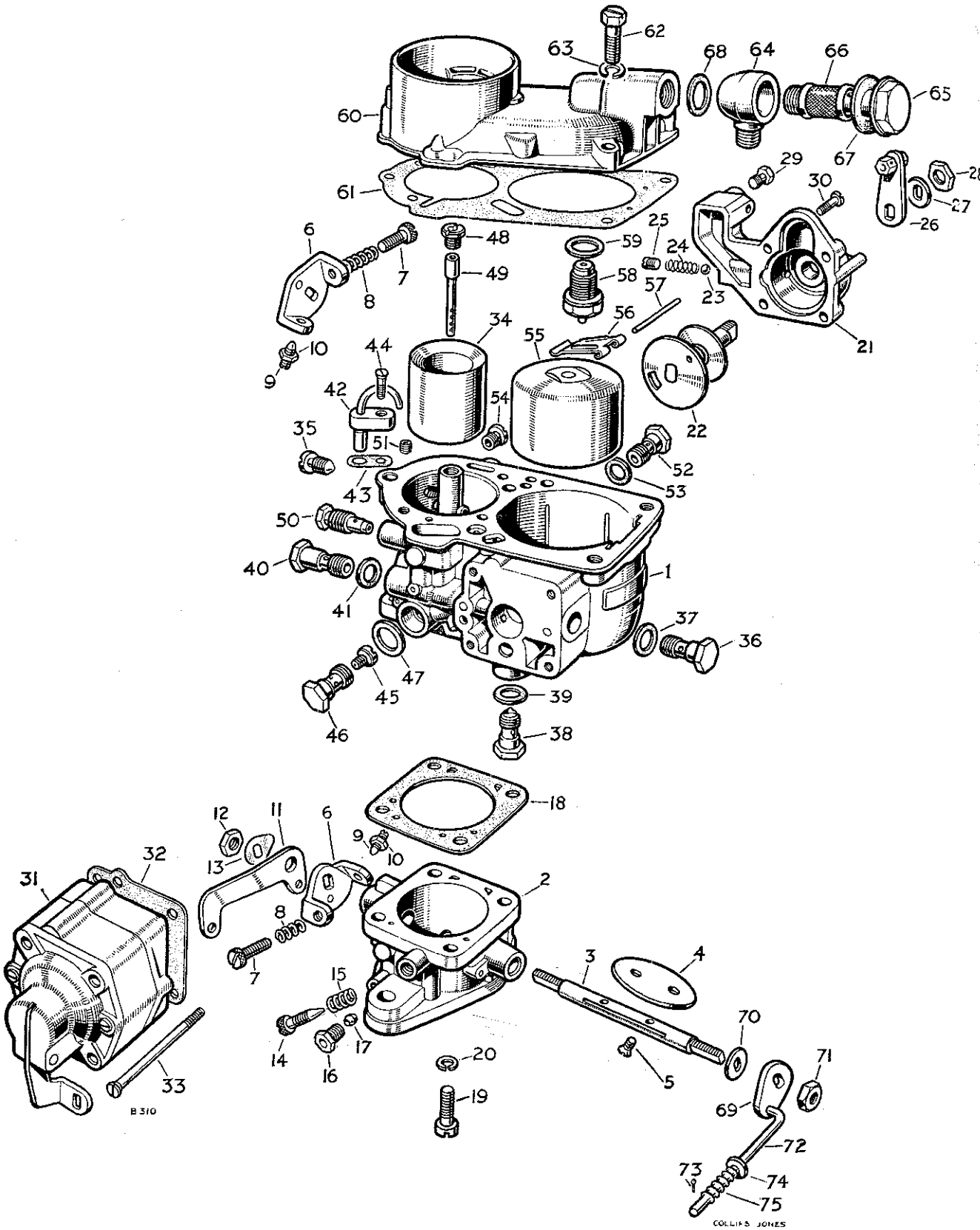

PLAT. REF.
46
47
48
49
50
51
52
53
54
55
56
57
58
59
60
61
62
63
64
65
66
67
68
69
70
71
72
73
74
75
carpages.com

CARBURETTOR

PLATE REF.	1 2 3 4 DESCRIPTION	Qty.	Part No.	REMARKS
46	Bolt, main jet carrier	1	260180	
47	Fibre washer for bolt	1	260181	
48	Correction jet (170)	1	260175	
49	Emulsion tube	1	260743	
50	Pilot jet (55)	1	260269	
51	Jet air bleed (1.5)	1	260179	
52	Starter jet, petrol (135)	1	260752	
53	Fibre washer for jet	1	260734	
54	Starter jet, air (5.5)	1	260719	
55	Float	1	260745	
56	Toggle for float	1	260753	
57	Spindle for toggle	1	260747	
58	Needle valve complete	1	260164	
59	Fibre washer for valve	1	260165	
60	Top cover for carburettor	1	260721	
61	Joint washer for top cover	1	260749	
62	Special screw fixing top cover	3	260751	
63	Spring washer for screw	3	260714	
64	Banjo union	1	260166	
65	Special bolt for union	1	260167	
66	Filter gauze for union	1	260168	
67	Fibre washer, large } For union	1	260169	
68	Fibre washer, small } For union	1	260170	
69	Lever for accelerator pump rod	1	261564	
70	Special washer for lever	1	261410	
71	Nut fixing lever to spindle	1	260159	
72	Control rod for accelerator pump	1	262312	
73	Split pin } For control rod	2	3359	
74	Plain washer } For control rod	2	260771	
75	Spring } For control rod	1	240689	
	Spring } For control rod	1	237774	When Engine Governor is fitted

SUB-STANDARD JETS

Main jet (110)	1	260274	3,000 to 6,000 ft.	For use as required
Air bleed jet (2.0)	1	260275	3,000 to 6,000 ft.	For use as required
Main jet (107.5)	1	261563	6,000 to 10,000ft	For use as required
Air bleed jet (2.0)	1	260275	6,000 to 10,000ft	For use as required
Choke tube (26)	1	262647	10,000 to 14,000 ft	For use as required
Main jet (107.5)	1	261563	10,000 to 14,000 ft	For use as required
Air bleed jet (2.0)	1	260275	10,000 to 14,000 ft	For use as required
Correction jet (180)	1	260263	10,000 to 14,000 ft	For use as required
Main jet (110)	1	260274	Tropical conditions	For use as required

cardiagn.com

MANIFOLDS

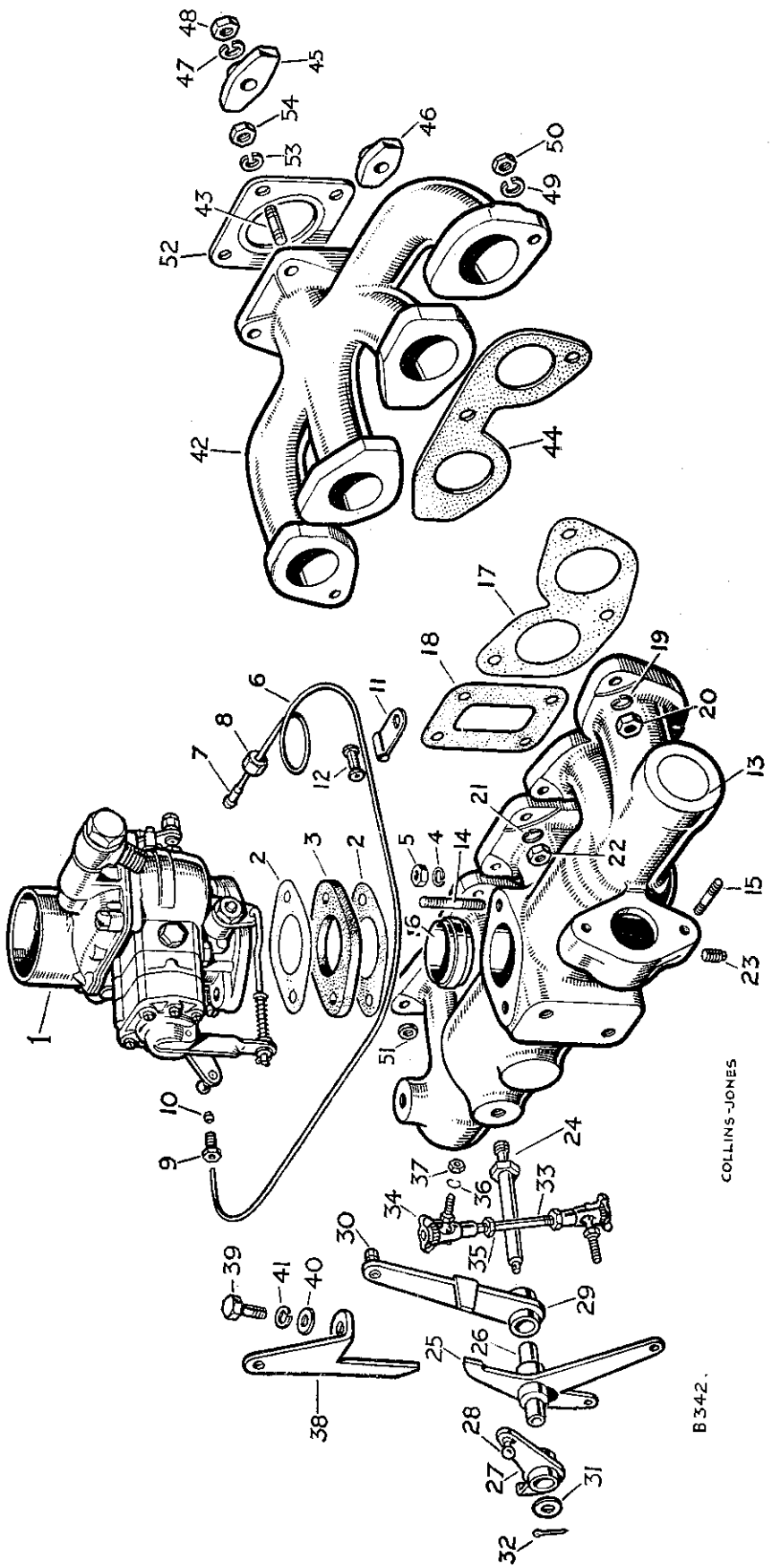

MANIFOLDS

PLATE REF.	1 2 3 4 DESCRIPTION	Qty.	Part No.	REMARKS
1	CARBURETTOR COMPLETE	1	237773	For component parts, see Pages 27 and 29
2	Joint washer for carburettor	2	212233	
3	Packing for carburettor	1	212232	
4	Spring washer } Fixing carburettor	2	3075	
5	Nut ($\frac{5}{16}$") } to manifold	2	2828	
6	Suction pipe complete, carburettor to distributor	1	214231	
7	Nipple } For suction pipe,	1	3787	
8	Nut } distributor end	1	3783	
9	Screwed union } For suction pipe,	1	260707	
10	Olive } carburettor end	1	260708	
11	Clip for suction pipe	1	214228	
12	Rubber grommet for clip ...	1	214229	
13	INLET MANIFOLD ASSEMBLY	1	218954	
14	Stud for carburettor	2	214054	
15	Stud for water outlet pipe	2	212104	
16	Dowel ring for carburettor	1	214019	
17	Joint washer, manifold to cylinder head	2	09179	
18	Joint washer, water branch to cylinder head	1	210447	
19	Spring washer } Fixing manifold	6	3075	
20	Nut ($\frac{5}{16}$") } to cylinder head	6	2828	
21	Spring washer } Fixing water branch	4	3074	
22	Nut ($\frac{1}{4}$") } to cylinder head	4	2823	
23	Plug for manifold	1	3289	
24	Spindle for carburettor bell crank and levers ...	1	219499	
25	CARBURETTOR BELL CRANK ASSEMBLY	1	231289	
26	Bush for levers ...	1	231290	
27	CARBURETTOR RELAY LEVER ASSEMBLY ...	1	231291	
28	Ball end for lever.	1	1481	
29	HAND THROTTLE LEVER ASSEMBLY	1	231292	
30	Swivel clamp for wire	1	219582	
31	Plain washer } Fixing bell crank and	1	2210	
32	Split pin } levers to spindle	1	2392	
33	ROD ASSEMBLY, BELL CRANK TO CARBURETTOR	1	231267	
34	Ball joint complete	2	231261	
35	Locknut ($\frac{1}{4}$") for ball joint	2	2823	
36	Spring washer } Fixing rod to bell crank	2	3074	
37	Nut ($\frac{1}{4}$") } and carburettor	2	2823	
38	Abutment bracket for hand throttle	1	219507	
39	Set bolt ($\frac{5}{16}$" Whit x $\frac{11}{16}$" long) } Fixing abutment	1	215647	
40	Plain washer } bracket to	1	2550	
41	Spring washer } manifold	1	3075	
42	EXHAUST MANIFOLD ASSEMBLY	1	216548	
43	Stud for exhaust pipe	4	213472	
44	Joint washer for exhaust manifold	2	09184	
45	Clamp, centre } For exhaust	1	09162	
46	Clamp, outer } manifold	2	09161	
47	Spring washer } For exhaust	3	3076	
48	Nut ($\frac{3}{8}$") } manifold clamps	3	2827	

SEE ALSO PAGE 33

cardiagn.com

DISTRIBUTOR AND STARTER

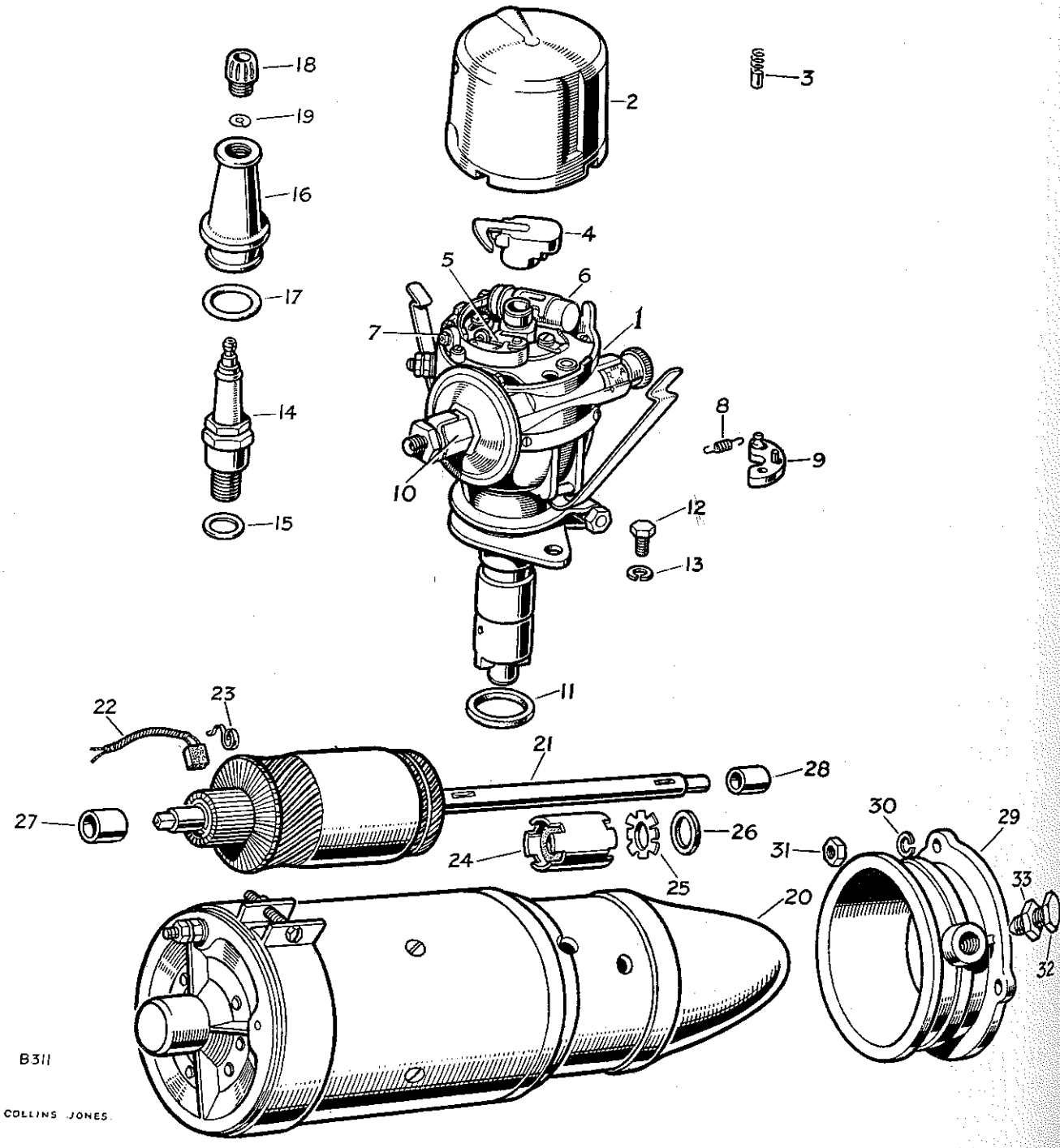

PLATE REF.	
1	
2	
3	
4	
5	
6	
7	
8	
9	
10	
11	
12	
13	
14	
15	
16	
17	
18	
19	
20	
21	
22	
23	
24	
25	
26	
27	
28	
29	F
30	S
31	N C
32	S
33	L
49	S
50	N
51	D
52	Jc
53	S
54	N

cardiagr.com

DISTRIBUTOR AND STARTER

PLATE REF.	1 2 3 4 DESCRIPTION	Qty.	Part No.	REMARKS
1	Distributor complete	1	233552	
2	Distributor cap complete	1	261240	
3	Brush and spring for cap	1	261241	
4	Rotor arm	1	261242	
5	Contact breaker points, set	1	260073	
6	Condenser for distributor	1	260070	
7	Bridge insulation for contact breaker	1	261244	
8	Auto advance springs, set	1	262441	
9	Auto advance weight	2	261846	
10	Vacuum unit	1	261489	
	Adjusting screw for distributor	1	243584	
	Spring and washer for adjusting screw	1	243585	
11	Cork washer for distributor housing	1	52278	
12	Special set bolt } Fixing	1	215758	
13	Spring washer } distributor lever	1	3074	
14	Sparking plug	4	262796	
15	Washer for sparking plug	4	40441	
	Suppressor for sparking plug	4	240138	
16	Sparking plug cover	4	214262	
17	Rubber sealing ring for cover	4	213172	
18	Cable nut	4	214278	
19	Washer for cable nut	4	214279	
	H.T. wire	As required	80603	
20	Starter motor complete	1	231947	
21	Armature for starter	1	262103	
	Field coil for starter	1	262861	
	Bracket for starter, commutator end	1	244706	
	Plate, transmission for starter	1	262926	
22	Brushes for starter motor, set	1	260055	
23	Spring set for brushes	1	261239	
24	Bendix drive sleeve assembly	1	260046	
	Bendix drive for starter	1	260029	
	Spring, bendix drive	1	262969	
25	Star washer } For	1	261505	
26	Fibre washer } drive sleeve	1	261506	
	Internal star washer for starter	1	243272	
27	Bush, commutator end } For	1	242958	
28	Bush, pinion end } starter	1	260092	
	Sundry parts kit	1	244718	
29	Housing for starter	1	09084	
30	Spring washer } Fixing housing to	3	3076	
31	Nut ($\frac{3}{8}$") } flywheel housing	3	2827	
	Cable clip for starter lead	1	3551	
32	Special bolt locating starter in housing	1	10841	
33	Locknut for special bolt	1	2094	
	MANIFOLDS			
49	Spring washer } Fixing ends of	2	3075	
50	Nut ($\frac{5}{16}$") } exhaust manifold	2	2828	
51	Distance piece at oil filler bracket	1	56375	Engines numbered 26100001 to 26100200
52	Joint washer for exhaust pipe	1	213358	
53	Spring washer } Fixing pipe	4	3075	
54	Nut ($\frac{5}{16}$") to manifold	4	3771	

cardiagn.com

DYNAMO AND FIXINGS

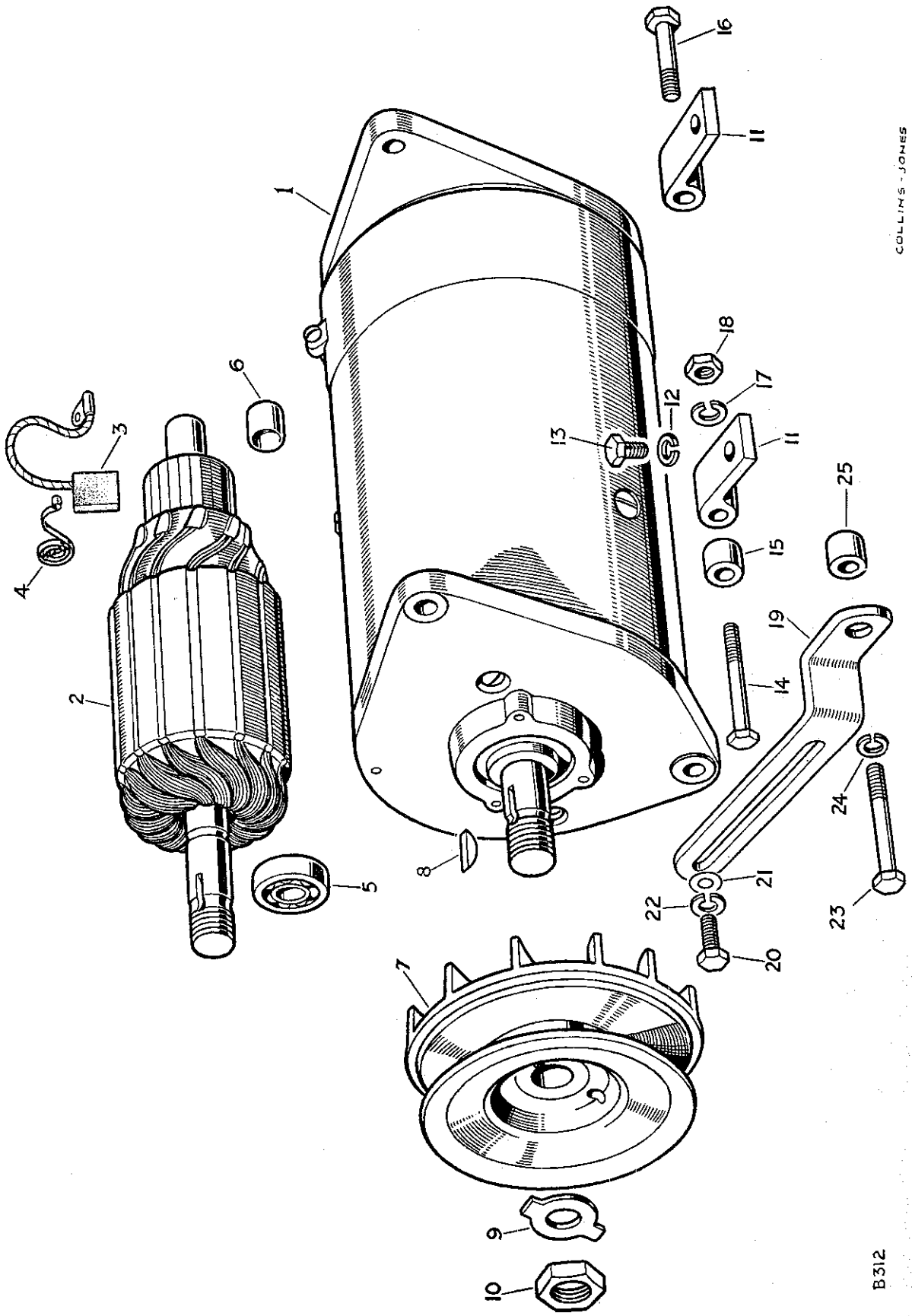

PLAT REF	
1	
2	
3	
4	
5	
6	
7	
8	
9	
10	
11	
12	
13	
14	
15	
16	
17	
18	
19	
20	
21	
22	
23	
24	
25	

landrovergarage.com

DYNAMO AND FIXINGS

PLATE REF.	1 2 3 4	DESCRIPTION	Qty.	Part No.	REMARKS
1		Dynamo complete	1	235552	Engines numbered 26100001 to 36108385 and 36137384
		Field coil for dynamo	1	262860	
2		Armature for dynamo	1	262085	
3		Brushes for dynamo, set	1	261483	
4		Spring set for brushes	1	261238	
5		Ball bearing } For	1	242672	
6		Bush } dynamo	1	262929	
		Dynamo complete	1	238983	Engines numbered 36108386 and 36137385 onwards
		Armature for dynamo	1	242674	
		Field coil for dynamo	1	262860	
		Brushes for dynamo, set	1	261483	
		Spring set for brushes	1	261238	
		Ball bearing } For	1	242672	
		Bush } dynamo	1	271614	
		Bracket, commutator end	1	242669	
		Bracket, drive end	1	242673	
		Bolt for dynamo	2	242675	
		Cover band	1	242668	
		Sundry parts, set	1	242676	
7		Pulley for dynamo	1	236360	
8		Woodruff key (No. 5) } Fixing	1	240270	
9		Lock washer } pulley to	1	217781	
10		Special nut } dynamo	1	240271	
11		Support bracket for dynamo	2	210572	
12		Spring washer } Fixing support bracket	2	3075	
13		Set bolt ($\frac{5}{16}$" x $\frac{13}{16}$" long) } to cylinder block	2	215216	
14		Bolt ($\frac{5}{16}$" x $2\frac{13}{16}$" long), front	1	237333	
15		Distance piece, front	1	217780	
16		Bolt ($\frac{5}{16}$" x $1\frac{19}{32}$" long), rear } Fixing dynamo	1	237329	
17		Spring washer to anchor	2	3075	
18		Nut ($\frac{5}{16}$") brackets	2	2828	
		Self-locking nut ($\frac{5}{16}$")	1	50525	
19		Adjusting link for dynamo	1	217767	
20		Special set bolt } Fixing	1	233568	
21		Plain washer } adjusting link	1	3868	
22		Spring washer } to dynamo	1	3075	
23		Set bolt ($\frac{5}{16}$" x $2\frac{5}{16}$" long) } Fixing adjusting	1	250531	
24		Spring washer } link to cylinder	1	3075	
25		Distance piece } block	1	210566	
		Spring clip for dynamo lead	1	3619	

cardiagn.com

FLYWHEEL AND CLUTCH

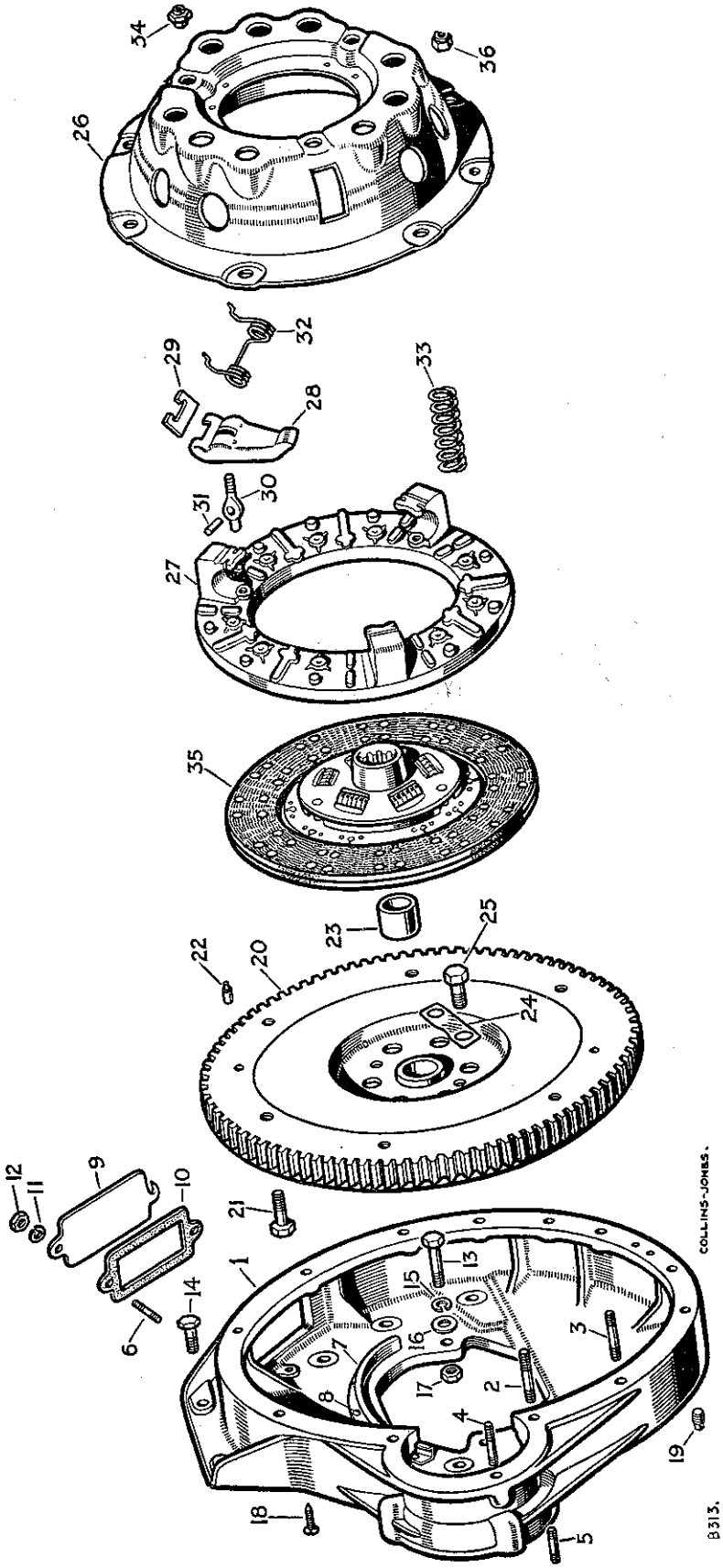

FLYWHEEL AND CLUTCH

PLATE REF.	1 2 3 4 DESCRIPTION	Qty.	Part No.	REMARKS
	FLYWHEEL HOUSING ASSEMBLY	1	212369	Engines numbered 26100001 to 26100200 and 26131502
1	FLYWHEEL HOUSING ASSEMBLY	1	236415	Engines numbered 26100201 and 26131503 onwards
2	Stud, long ($\frac{3}{8}''$) } Fixing	2	55778	
3	Stud, short ($\frac{3}{8}''$) } flywheel housing	10	3650	
4	Stud ($\frac{5}{16}''$) } to bell housing	1	3200	
5	Stud ($\frac{3}{8}''$) fixing starter housing	3	52171	
6	Stud ($\frac{1}{4}''$) fixing inspection cover	2	3651	
7	Mud excluder for housing	1	236090	
8	Drive screw fixing excluder	6	78128	
9	Inspection cover plate	1	56140	
10	Joint washer for cover plate	1	50216	
11	Spring washer } Fixing	2	3074	
12	Nut ($\frac{1}{4}''$) } cover plate	2	2823	
13	Special bolt	6	250542	
14	Special set bolt Fixing	2	215272	
15	Spring washer } flywheel housing	8	3076	
16	Plain washer to cylinder block	6	2219	
17	Nut ($\frac{3}{8}''$)	6	2827	
18	Indicator pin for engine timing	1	09085	
19	Drain plug for housing	1	3290	
20	FLYWHEEL ASSEMBLY	1	230304	
	Ring gear for flywheel	1	232404	
21	Special fitting bolt fixing clutch cover plate	6	214840	
22	Dowel locating clutch cover plate	2	231759	
23	Bush for primary pinion	1	08566	
24	Locker } Fixing flywheel	3	3674	
25	Special set bolt } to crankshaft	6	210211	
	CLUTCH ASSEMBLY	1	231879	
26	Cover plate for clutch	1	231888	
27	Pressure plate for clutch	1	231880	
28	Release lever for clutch	3	242993	Must be supplied and fitted in sets of three
29	Strut for release lever	3	231884	
31	Pin for release lever	3	231885	
32	Anti-rattle spring for release lever	3	231883	
33	Clutch spring (cream)	9	231881	
34	Special eye bolt and nut for release lever adjustment	3	242996	
35	Clutch plate complete	1	240404	
	Lining package for clutch plate	1	261921	
36	Self-locking nut ($\frac{5}{16}''$) fixing cover plate	6	251321	

cardiagn.com

GEARBOX, MAIN CASING

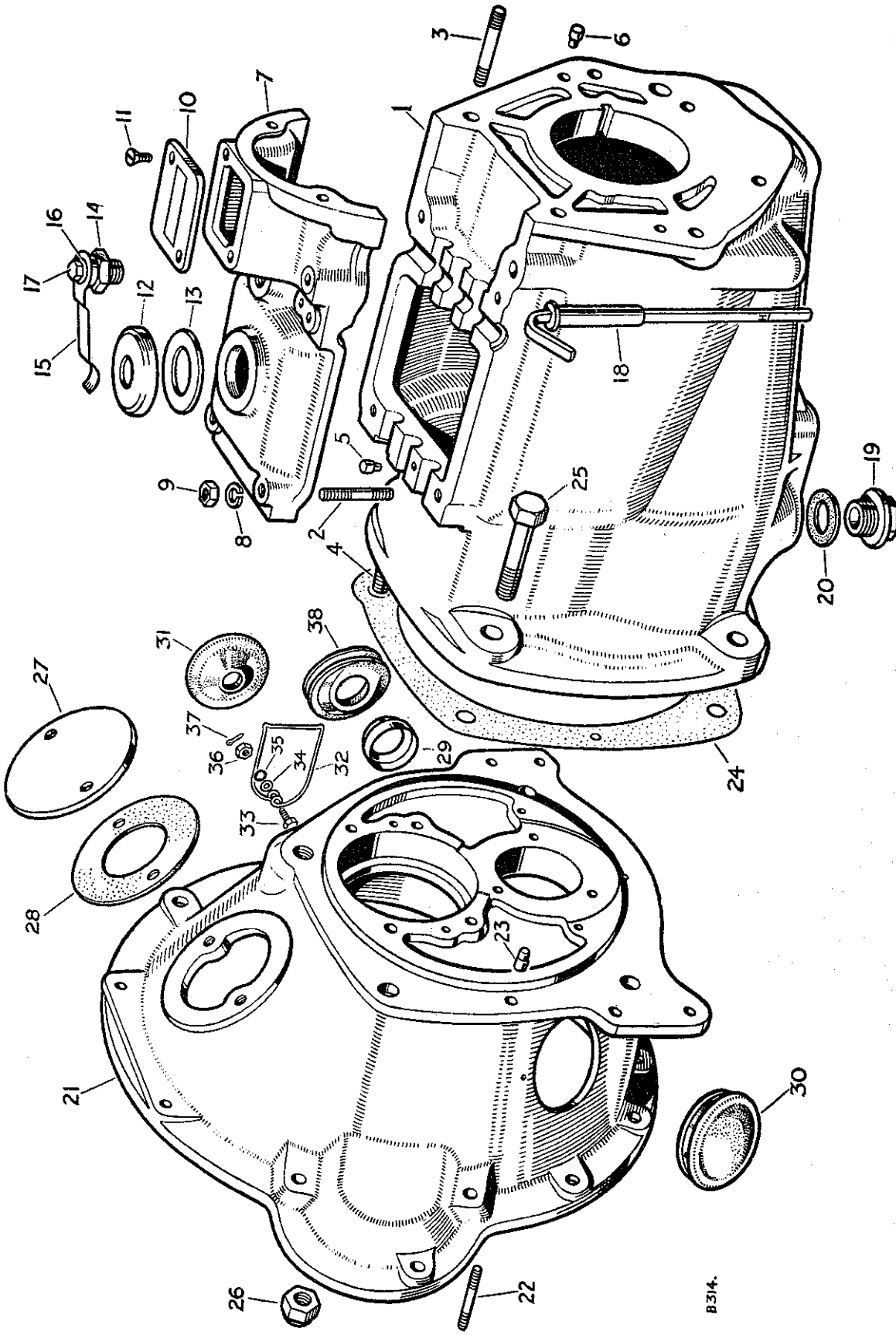

GEARBOX, MAIN CASING

PLATE REF.	1 2 3 4 DESCRIPTION	Qty.	Part No.	REMARKS
	GEARBOX COMPLETE ASSEMBLY	1	234749*	
1	GEARBOX CASING ASSEMBLY	1	219894	
	Stud for top cover	2	3319	
2	Stud for top cover and gear change plate	2	3236	
	Stud, long } For transfer	2	55778	
3	Stud, short } casing	3	3238	
4	Stud for bell housing	1	264639	
5	Dowel locating top cover	2	07289	
6	Dowel locating transfer casing	2	55636	
7	Top cover for gearbox	1	06417	Not supplied separately
8	Spring washer } Fixing	4	3076	
9	Nut ($\frac{3}{8}$") } top cover	4	2827	
10	Inspection cover plate for selectors	1	42590	
11	Set screw ($\frac{1}{4}$" Whit. x $\frac{7}{16}$" long) fixing cover plate	2	52246	
12	Oil filler cap	1	11931	
13	Joint washer for cap	1	11932	
14	Plug for retaining spring	1	59720	
15	Retaining spring for cap	1	06419	
16	Plain washer } Fixing spring	1	2213	
17	Set bolt ($\frac{1}{4}$" Whit x $\frac{7}{16}$" long) } to plug	1	215769	
18	Oil level dipstick	1	239192	
19	Drain plug for gearbox	1	241110	
20	Washer for plug	1	230509	
	BELL HOUSING ASSEMBLY	1	219895	Gearboxes numbered 26100001 to 26100200
21	BELL HOUSING ASSEMBLY	1	236414	Gearboxes numbered 26100201 onwards
22	Stud for withdrawal race housing	3	269413	
23	Dowel locating gearbox	1	55636	
24	Joint washer, bell housing to gearbox	1	07118	
25	Bolt ($\frac{1}{2}$" x $1\frac{13}{16}$" long) } Fixing	1	215494	
	Bolt ($\frac{1}{2}$" x 2" long) } gearbox casing	2	250573	
26	Self-locking nut ($\frac{1}{2}$") } to bell housing	4	50528	
27	Top cover for bell housing	1	06846	
28	Rubber seal for top cover	1	232606	
29	Centre for dust cover	1	232647	R.H.D.
	Centre for dust cover	1	232627	L.H.D.
	Joint washer for centre	1	213662	L.H.D.
30	Grommet for bell housing hole	1	232604	
31	Grommet for bell housing shaft	1	233380	} Gearboxes numbered 26100001 to 26100200
32	Spring for shaft grommet	1	232898	R.H.D.
	Spring for shaft grommet	1	233379	L.H.D.
33	Special bolt } Fixing	1	232930	
34	Plain washer } spring to	1	2226	
35	Shakeproof washer } bell housing	1	71082	
36	Nut (2 B.A.)	1	2247	
37	Split pin	1	3359	
38	Grommet for bell housing shaft	1	236281	R.H.D. } Gearboxes numbered 26100201 onwards
	Grommet for bell housing shaft	1	236282	L.H.D.
	Plain washer } Fixing gearbox	12	2210	
	Plain washer } to engine	1	2550	
	Nut ($\frac{3}{8}$")	12	2827	
	Nut ($\frac{5}{16}$")	1	2828	

* The main gearbox i.e., 4F and R without transfer box, can be supplied as a separate assembly under Part No. 233556

cardiagn.com

GEARBOX, TRANSFER CASING

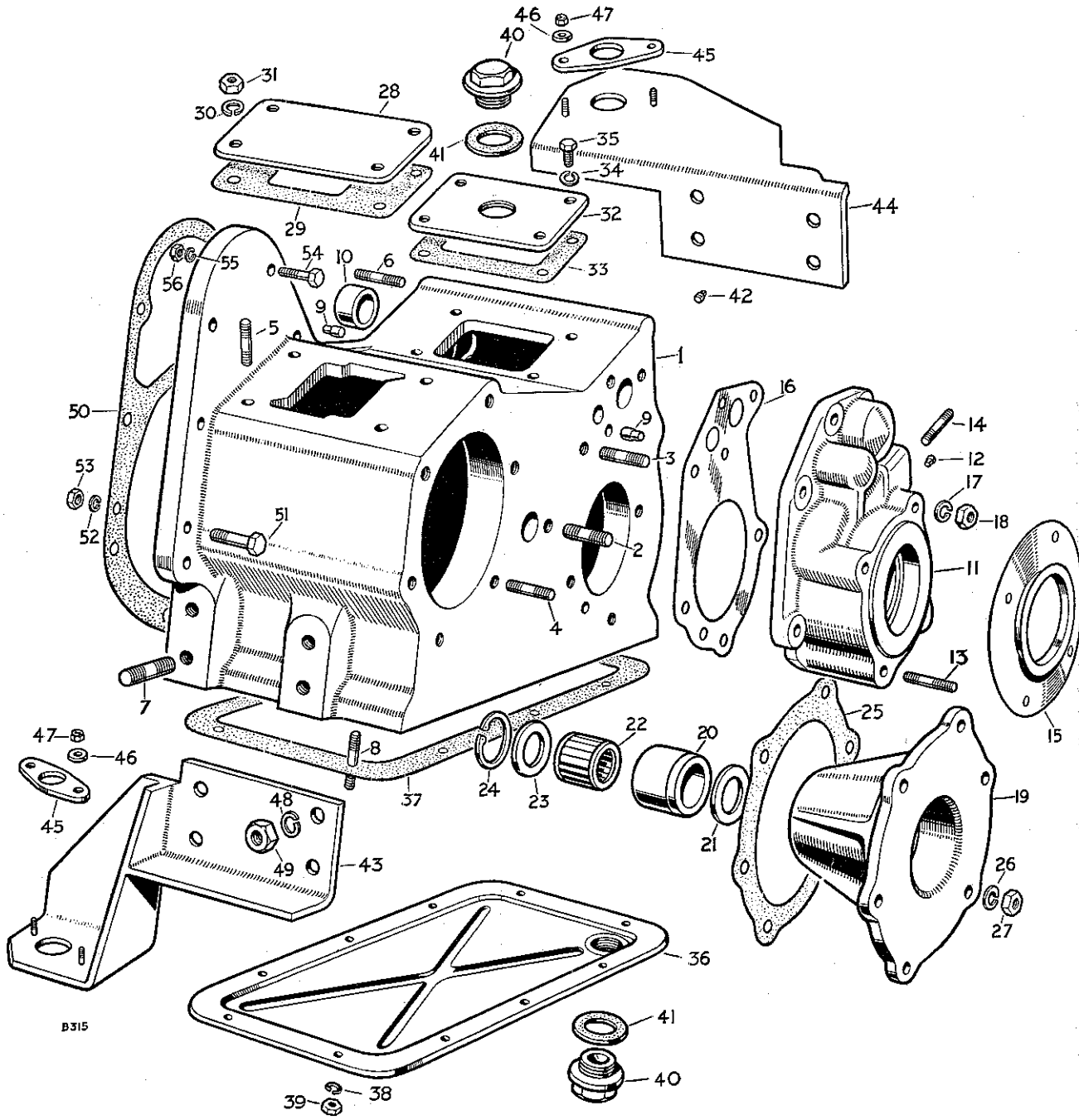

GEARBOX, TRANSFER CASING

PLATE REF.	1 2 3 4 DESCRIPTION	Qty.	Part No.	REMARKS
1	TRANSFER BOX CASING ASSEMBLY	1	233446	
2	Stud for intermediate shaft	1	217778	
3	Stud for speedometer housing	6	3650	
4	Stud for mainshaft housing	6	3650	
5	Stud for top cover plate	4	217978	
	Stud, long } For transfer	1	232497	
6	Stud, short } shaft housing	6	3200	
7	Stud for engine mounting	8	217976	
8	Stud for bottom cover	10	212104	
9	Dowel locating speedometer housing	4	55636	
10	Bush for shaft guide	1	217448	
11	HOUSING ASSEMBLY FOR SPEEDOMETER PINION	1	236628	
12	Insert for pinion	1	232846	
13	Stud for transmission brake	4	217973	
14	Stud for speedometer drive sleeve	2	212104	
15	Mudshield for housing	1	236545	Gearboxes numbered 26101454 and 26130447 onwards
	Shim .003″ }	As required	235455	
	Shim .005″ } For speedometer	As required	217622	
16	Shim .010″ } pinion housing	As required	217623	
	Shim .015″ }	As required	217620	
17	Spring washer } Fixing housing	6	3076	
18	Nut ($\frac{3}{8}$″) } to transfer box	6	2827	
	HOUSING COMPLETE ASSEMBLY, REAR MAINSHAFT BEARING	1	230696	
19	HOUSING ASSEMBLY, REAR MAINSHAFT BEARING	1	217844	
20	Bush for housing	1	217843	Not required when rear power take-off or centre power take-off is fitted
21	Retaining plate, inner	1	217523	
22	Bearing for mainshaft	1	217478	
23	Retaining plate, outer	1	217523	
24	Circlip fixing bearing	1	217525	
25	Joint washer for bearing housing	1	217680	
26	Spring washer } Fixing housing	6	3076	
27	Nut ($\frac{3}{8}$″) } to transfer box	6	2827	
28	Cover plate for P.T.O. selector	1	217970	Not required when rear power take-off or centre power take-off is fitted
29	Joint washer for cover plate	1	230140	
30	Spring washer } Fixing cover plate	4	3075	
31	Nut ($\frac{5}{16}$″) } to transfer box	4	2828	
32	Cover plate for transfer gear change	1	230021	
33	Joint washer for cover plate	1	219995	
34	Spring washer } Fixing	4	3074	
35	Set bolt ($\frac{1}{4}$″ Whit x $\frac{3}{4}$″ long) } plate	4	215594	
36	Cover plate, bottom, for transfer box	1	218259	
37	Joint washer for bottom cover	1	218270	
38	Spring washer } Fixing	10	3074	
39	Nut ($\frac{1}{4}$″) } cover	10	2823	
40	Plug, top and bottom	2	241110	
41	Joint washer for plug	2	230509	
42	Oil level plug, $\frac{1}{8}$″ gas	1	3289	

cardiagn.com

GEARBOX, TRANSFER CASING

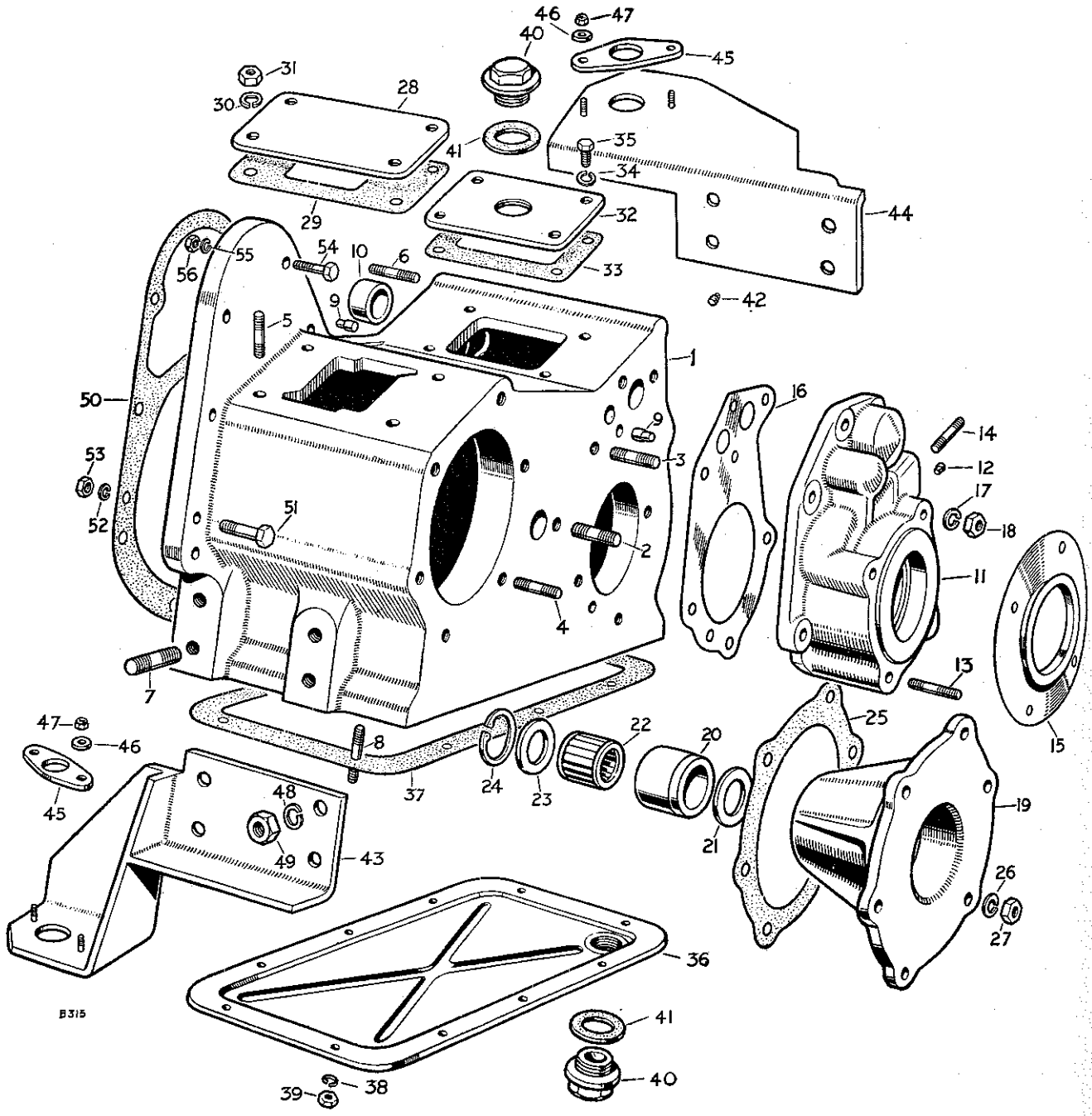

GEARBOX, TRANSFER CASING

PLATE REF.	1 2 3 4 DESCRIPTION		Qty.	Part No.	REMARKS
	Rear mounting foot complete L.H.		1	263456*	
	Rear mounting foot complete R.H.		1	234643*	
43	Rear mounting foot L.H.		1	263455	
44	Rear mounting foot R.H.		1	234641	
45	Adjuster for mounting foot		2	234612	
46	Plain washer	For adjuster	4	2217	
47	Self-locking nut ($\frac{5}{16}$")	For adjuster	4	251321	
48	Spring washer	Fixing feet to transfer box	8	3077	Alternative, check before ordering
	Locking plate for mounting feet	Fixing feet to transfer box	4	241839	Alternative, check before ordering
49	Nut ($\frac{7}{16}$")	Fixing feet to transfer box	8	2836	
50	Joint washer, transfer box to gearbox		1	267795	
51	Bolt ($\frac{3}{8}$" x 1$\frac{11}{16}$" long)	Fixing transfer box to gearbox	1	215278	
52	Spring washer	Fixing transfer box to gearbox	3	3076	
53	Nut ($\frac{3}{8}$")	Fixing transfer box to gearbox	3	2827	
	Self-locking nut ($\frac{3}{8}$")	Fixing transfer box to gearbox	3	50526	
54	Bolt ($\frac{5}{16}$" x 1$\frac{29}{32}$" long)	Fixing transfer box to gearbox top cover	2	215170	
55	Spring washer	Fixing transfer box to gearbox top cover	2	3075	
56	Nut ($\frac{5}{16}$")	Fixing transfer box to gearbox top cover	2	2828	

* Use complete mounting foot for Gearboxes numbered 26100001 to 26100907 and 26130286

cardiagn.com

GEARBOX, SHAFTS AND GEARS

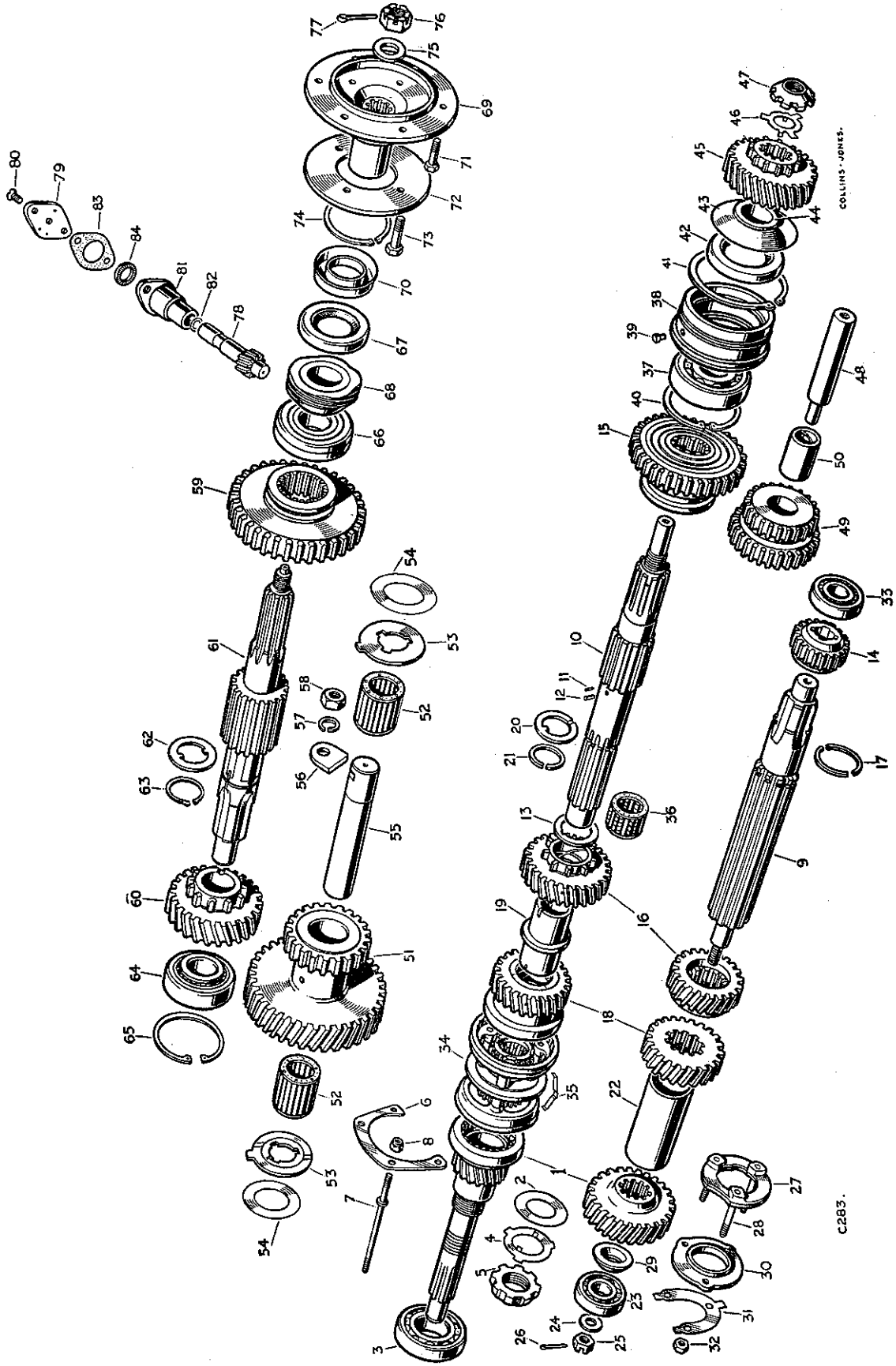

PLATE REF.	
1	F
2	
3	E
4	I
5	I
6	F
7	E
8	S
9	I
10	N
11	F
12	F
13	
14	I
15	I
16	2
	2
17	S
18	3
19	I
	3
	I
20	
21	S
22	S
23	I
24	I
25	S
26	S
27	I
28	
	I
29	I
	I
30	I
31	I
32	N
33	I
34	S
35	
36	F
37	F
38	F
39	F
40	C
41	C

carbidadn.com

GEARBOX, SHAFTS AND GEARS

PLATE REF.	1 2 3 4 DESCRIPTION	Qty.	Part No.	REMARKS
1	Primary pinion and constant gear	1	240485	
2	Shield for primary pinion	1	01017	
3	Ball bearing for primary pinion	1	55714	
4	Lockwasher } Fixing bearing	1	08250	
5	Locknut } to pinion	1	213416	
6	Retaining plate } Fixing	1	213666	
7	Extension stud } bearing to	4	214090	
8	Self-locking nut ($\frac{5}{16}$") } bell housing	4	50525	
9	Layshaft	1	09917	
10	Mainshaft	1	265258	
11	Peg for 2nd gear thrust washer	1	06405	
12	Peg for mainshaft distance sleeve	1	09561	
	Thrust washer .125" }	1	267572 }	
13	Thrust washer .128" } For 2nd	1	267573 } As	
	Thrust washer .130" } speed gear	1	267574 } required	
	Thrust washer .135" }	1	267575 }	
14	1st speed layshaft gear	1	217388	
15	1st speed mainshaft gear	1	217387	
16	2nd speed layshaft and mainshaft gear	1	260133	Gearboxes numbered 26100001 to 26110019 and 26137677
	2nd speed layshaft and mainshaft gear	1	245766	Gearboxes numbered 26110020 and 26137678 onwards
17	Split ring for 2nd speed layshaft gear	1	08153	
18	3rd speed layshaft and mainshaft gear	1	238339 }	Gearboxes numbered 26100001 to 26110019 and 26137677
19	Distance sleeve for mainshaft	1	239705 }	
	3rd speed layshaft and mainshaft gear	1	245767 }	Gearboxes numbered 26110020 and 26137678 onwards
	Distance sleave for mainshaft	1	239706 }	
	Thrust washer .125" }	1	08188 }	
20	Thrust washer .128" } For 3rd speed	1	50702 } As	
	Thrust washer .130" } mainshaft gear	1	50703 } required	
	Thrust washer .135" }	1	231737 }	
21	Spring ring fixing 2nd and 3rd mainshaft gears	1	06402	
22	Sleeve for layshaft	1	09920	
23	Bearing for layshaft, front	1	09962	
24	Plain washer }	1	08185	
25	Slotted nut } Fixing bearing to layshaft	1	09932	
26	Split pin }	1	2980	
27	BEARING PLATE ASSEMBLY FOR LAYSHAFT	1	214792	
28	Stud for bearing cap	3	213417	
	Distance piece .312" }	1	241649 }	
29	Distance piece .332" } For layshaft	1	241650 } As required	
	Distance piece .352" }	1	241651 }	
30	Retaining plate for layshaft front bearing	1	213419	
31	Lock washer } Fixing cap and bearing	1	09931	
32	Nut ($\frac{5}{16}$") } to bell housing	3	2828	
33	Bearing for layshaft, rear	1	55715	
34	Synchronising clutch	1	239160	
35	Detent spring for clutch	3	06395	
36	Roller bearing for mainshaft	1	06397	
37	Ball bearing for mainshaft	1	1645	
38	Housing for mainshaft bearing, rear	1	217811	
39	Peg, housing to casing	1	09927	
40	Circlip, bearing to housing	1	09960	
41	Circlip, housing to casing	1	09961	

cardiagn.com

GEARBOX, SHAFTS AND GEARS

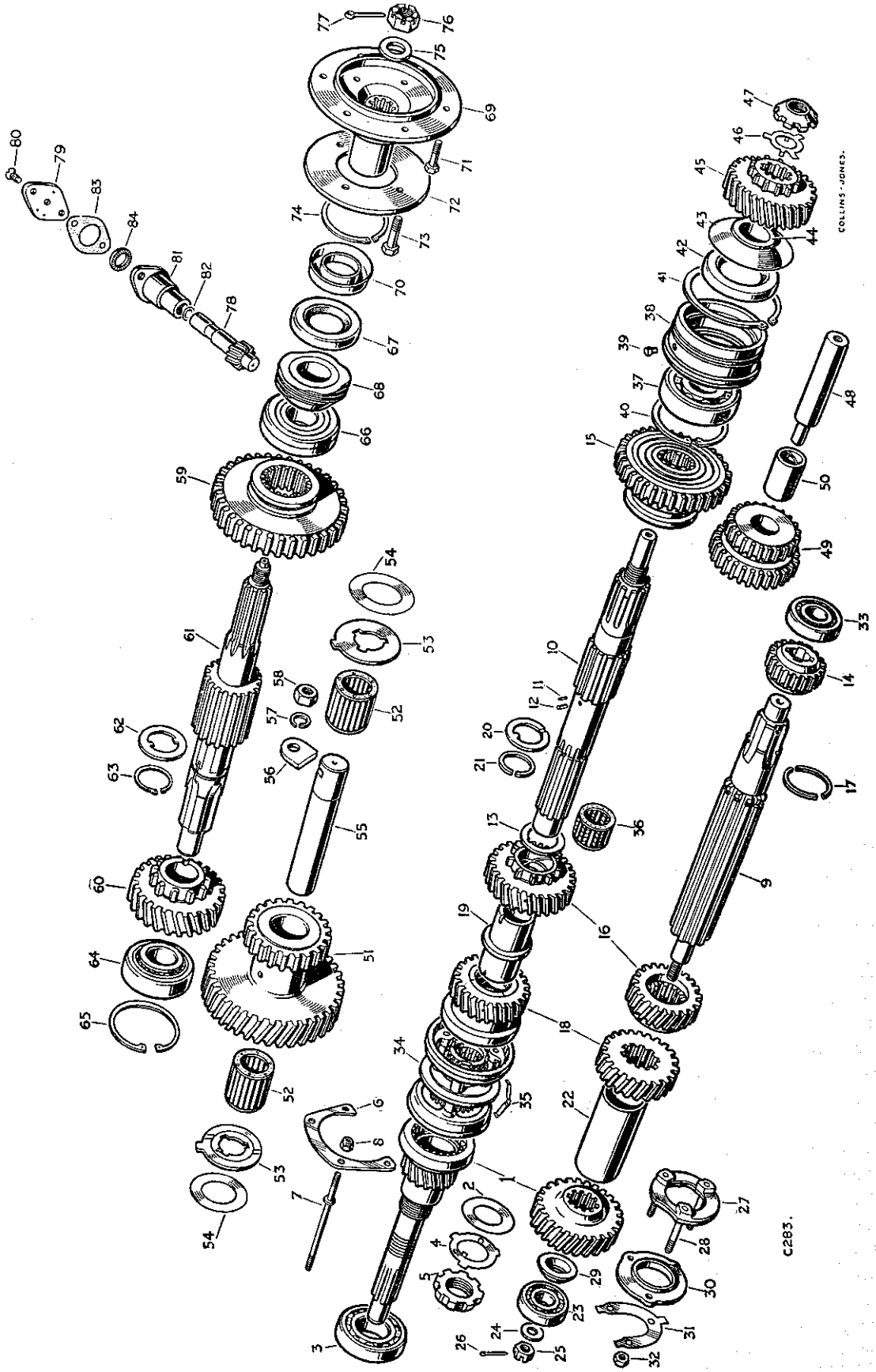

GEARBOX, SHAFTS AND GEARS

PLATE REF.	1 2 3 4 DESCRIPTION	Qty.	Part No.	REMARKS
42	Oil seal for rear of mainshaft	1	236305	
43	Oil thrower for mainshaft	1	232415	
44	Distance piece, rear of mainshaft	1	217474	
45	Mainshaft gear for transfer box	1	218244	
46	Lock washer } Fixing gear	1	217476	
47	Special nut } to mainshaft	1	217477	
48	Shaft for reverse gear	1	06424	
49	REVERSE WHEEL ASSEMBLY	1	217389	
50	Bush for reverse wheel	1	56854	
51	Gear, intermediate	1	219468	
52	Roller bearing for intermediate gear	2	219466	
53	Thrust washer for intermediate gear	2	219469	
54	Shim for intermediate gear	As required	234835	
55	Shaft for intermediate gear	1	267794	
56	Retaining plate for shaft	1	217484	
57	Spring washer } Fixing plate	1	3076	
58	Nut ($\frac{3}{8}$") } to casing	1	2827	
59	Low gear wheel	1	235438	
60	High gear wheel	1	218243	
61	Output shaft, rear drive	1	235985	
62	Thrust washer for high gear wheel	1	217488	
63	Circlip fixing washer to shaft	1	217489	
64	Bearing for output shaft, front	1	217490	
65	Circlip fixing bearing to case	1	217526	
66	Bearing for output shaft, rear	1	217512	
67	Oil seal for output shaft	1	236417	
68	Speedometer worm complete	1	271491	
	Flange for output shaft, rear drive	1	236630	
70	Mudshield for flange	1	236074	Gearboxes numbered 26101454 and 26130447 onwards
71	Fitting bolt for brake drum	6	217564	
72	Retaining flange for brake drum bolts	1	217568	
73	Fitting bolt for propeller shaft	4	217565	
74	Circlip retaining bolts and flange	1	217546	
75	Plain washer }	1	3300	
76	Slotted nut } Fixing flange to output shaft	1	3259	
77	Split pin }	1	2428	
78	Speedometer pinion	1	232867	
79	Retaining plate for pinion	1	232565	
80	Screw fixing plate to housing	2	2529	
81	Sleeve for pinion	1	268791	
84	Oil seal for pinion	1	211502	

cardiagn.com

GEARBOX, SELECTORS AND LEVERS

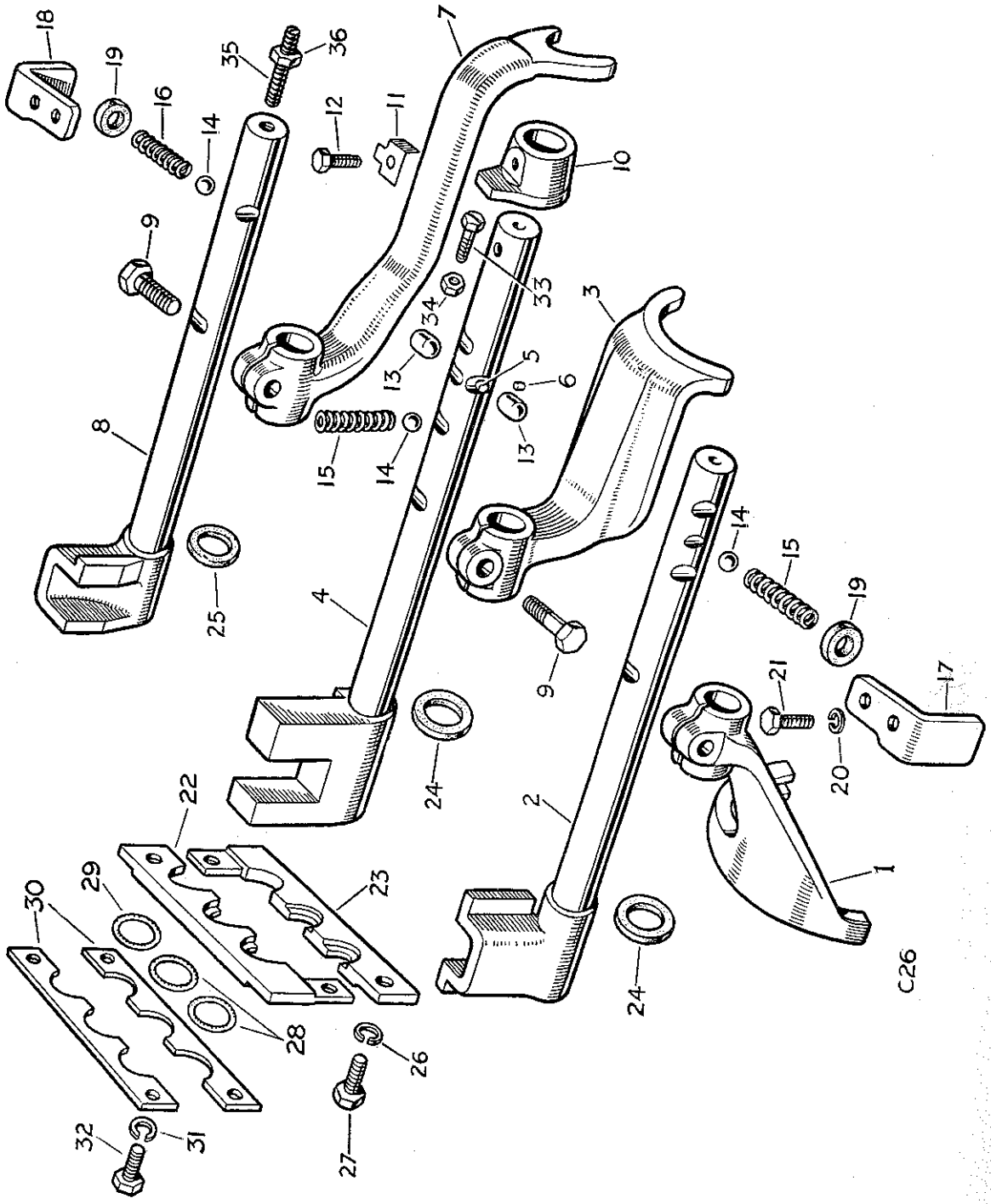

GEARBOX, SELECTORS AND LEVERS

PLATE REF. 1 2 3 4	DESCRIPTION	Qty.	Part No.	REMARKS
1	Selector fork, 3rd and 4th speed	1	06422	
2	Shaft for fork, 3rd and 4th speed	1	213636	
3	Selector fork, 1st and 2nd speed	1	06421	
4	SHAFT ASSEMBLY FOR FORK, 1st and 2nd SPEED	1	213637	
5	Interlocking pin	1	55697	
6	Peg fixing interlocking pin	1	55775	
7	Selector fork, reverse	1	217391	
8	Shaft for fork, reverse	1	219725	
9	Set bolt ($\frac{5}{16}''$ x 1" long) fixing forks to shafts	3	237160	
10	Stop for 2nd speed	1	210203	
11	Locker } Fixing stop to	1	210204	
12	Set bolt ($\frac{1}{4}''$ x $\frac{5}{8}''$ long) } selector shaft	1	215053	
13	Interlocking plunger	2	55638	
14	Steel ball for selectors	3	1643	
15	Selector spring, forward	2	03649	
16	Selector spring, reverse	1	56102	
17	Retaining plate L.H. } For	1	05853	
18	Retaining plate R.H. } selector springs,	1	05854	
19	Rubber grommet } side	2	05852	
20	Spring washer } Fixing retaining	4	3074	
21	Set bolt ($\frac{1}{4}''$ Whit. x $\frac{1}{2}''$ long) } plates	4	215758	
22	End cover, top half, for selector shafts	1	210205	
23	End cover, bottom half, for selector shafts	1	210206	
24	Seal for selector shafts	2	237637	
25	Cork seal for reverse shaft	1	05857	
26	Spring washer } Fixing covers	2	3074	
27	Set bolt ($\frac{1}{4}''$ Whit. x $\frac{7}{16}''$ long) } to gearbox	2	215769	
33	Set bolt (2 B.A. x $\frac{9}{16}''$ long) } In cover for	1	3697	
34	Locknut (2 B.A.) } 2nd gear stop	1	2247	
35	Adjustable stop for reverse selector shaft	1	231033	
36	Locknut ($\frac{1}{4}''$) for stop	1	2823	

cardiagn.com

FRONT OUTPUT SHAFT HOUSING, FOUR WHEEL DRIVE

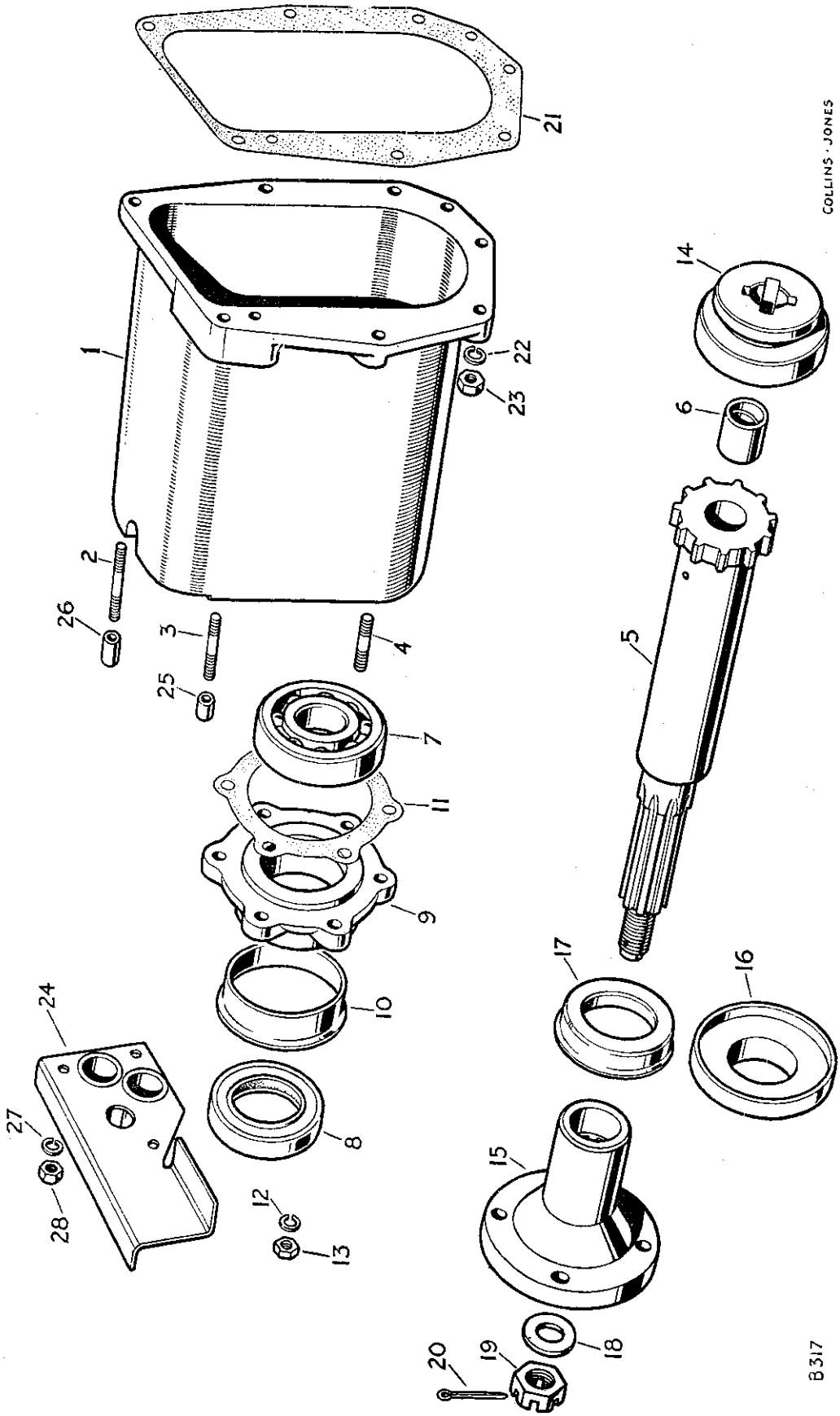

cardiagn.com

FRONT OUTPUT SHAFT HOUSING, FOUR WHEEL DRIVE

PLATE REF.	1 2 3 4	DESCRIPTION	Qty.	Part No.	REMARKS
1		TRANSFER SHAFT HOUSING ASSEMBLY	1	242686	
2		Stud, long } For	1	233464	
3		Stud, short } dust cover	2	212103	
4		Stud for oil seal retainer	6	217978	
5		FRONT OUTPUT SHAFT ASSEMBLY	1	233248	
6		Bush for shaft	1	234534	
7		Bearing for front output shaft	1	217325	
8		Oil seal for shaft	1	236417	
9		Retainer for oil seal	1	234524	Single type dust shield } Alternative types,
		Retainer for oil seal	1	236541	Double type mud shield } check before ordering
10		Mudshield for retainer	1	236548	Gearboxes numbered 26101202 and 26130387 onwards
11		Joint washer for retainer	1	234525	
12		Spring washer } Fixing	6	3075	
13		Nut ($\frac{5}{16}$") } retainer	6	2828	
14		Locking dog, four-wheel drive	1	233241	
15		Flange for transfer shaft	1	06718	
16		Dust shield for flange	1	232669	Gearboxes numbered 26100001 to 26101201 and 26130386
17		Mudshield for flange	1	236074	Gearboxes numbered 26101202 and 26130387 onwards
18		Plain washer } Fixing flange	1	3300	
19		Slotted nut } to transfer	1	3259	
20		Split pin } shaft	1	2428	
21		Joint washer for transfer housing	1	233448	
22		Spring washer } Fixing housing	7	3075	
23		Nut ($\frac{5}{16}$") } to transfer box	7	2828	
24		Dust cover plate for selector shafts	1	233468	
25		Distance piece, short }	2	233465	
26		Distance piece, long } Fixing dust cover	1	233466	
27		Spring washer } to housing	3	3074	
28		Nut ($\frac{1}{4}$") }	3	2823	

cardiagn.com

CLUTCH WITHDRAWAL MECHANISM

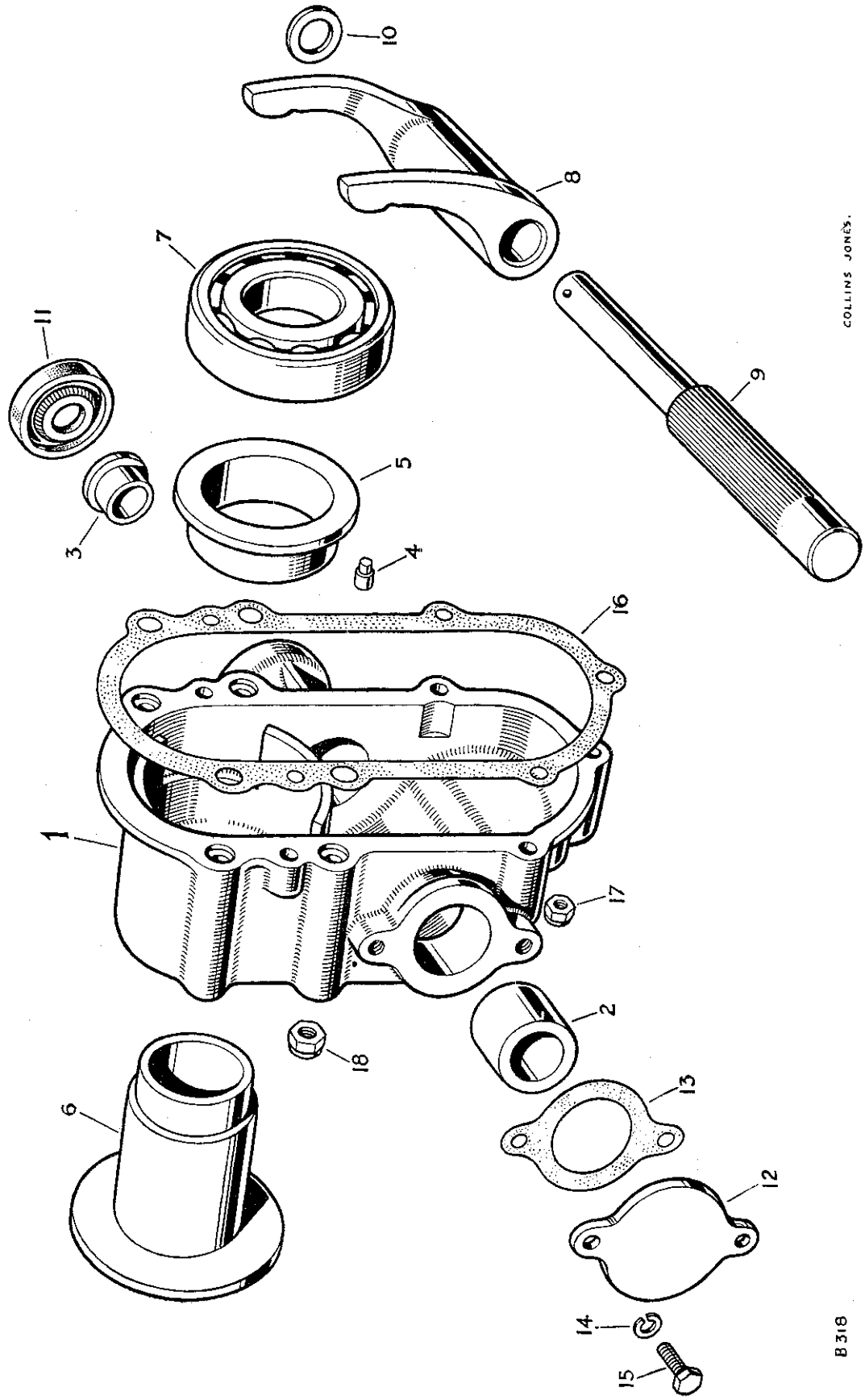

PLATE REF.	
1	
2	
3	
4	
5	
6	
7	
8	
9	
10	
11	
12	
13	
14	
15	
16	
17	
18	

cardiagn.com

CLUTCH WITHDRAWAL MECHANISM

PLATE REF.	1 2 3 4 DESCRIPTION	Qty.	Part No.	REMARKS
1	CLUTCH WITHDRAWAL RACE HOUSING ASSEMBLY	1	231071	R.H.D.
	CLUTCH WITHDRAWAL RACE HOUSING ASSEMBLY	1	232745	L.H.D
2	Bush for cross shaft, large	1	214793	R.H.D.
	Bush for cross shaft, large	1	217214	L.H.D
3	Bush for cross shaft, small	2	214794	
4	Dowel locating housing	2	213700	
	Clutch cross shaft cap	1	216161	L.H.D
5	Bush for withdrawal race sleeve	1	231075	
6	Clutch withdrawal sleeve	1	231074	
7	Withdrawal race thrust bearing	1	214797	
8	Operating fork for clutch	1	264807	
9	Cross shaft for clutch operation	1	231943	R.H.D.
	Cross shaft for clutch operation	1	231942	L.H.D.
	Woodruff key for cross shaft	1	1664	L.H.D
10	Thrust washer } For	1	213660	
	Thrust washer, outer } cross shaft	1	217216	L.H.D
11	Oil seal for cross shaft	1	214787	R.H.D.
	Oil seal for cross shaft	1	219988	L.H.D.
12	Cover plate for cross shaft	1	213661	R.H.D
	Housing for cross shaft oil seal	1	216160	L.H.D.
13	Joint washer for cover plate or housing	1	213662	
14	Spring washer } Fixing cover	2	3074	
15	Set bolt ($\frac{1}{4}''$ Whit. x $\frac{21}{32}''$ long) } plate or oil	2	215593	R.H.D
	Set bolt ($\frac{1}{4}''$ Whit x $1\frac{1}{4}''$ long) } seal housing	2	215599	L.H.D.
16	Joint washer for clutch withdrawal housing	1	213663	
17	Self-locking nut ($\frac{1}{4}''$) } Fixing withdrawal	3	50524	
18	Self-locking nut ($\frac{5}{16}''$) } housing to bell housing	4	50525	

cardiagn.com

MAIN GEAR LEVER

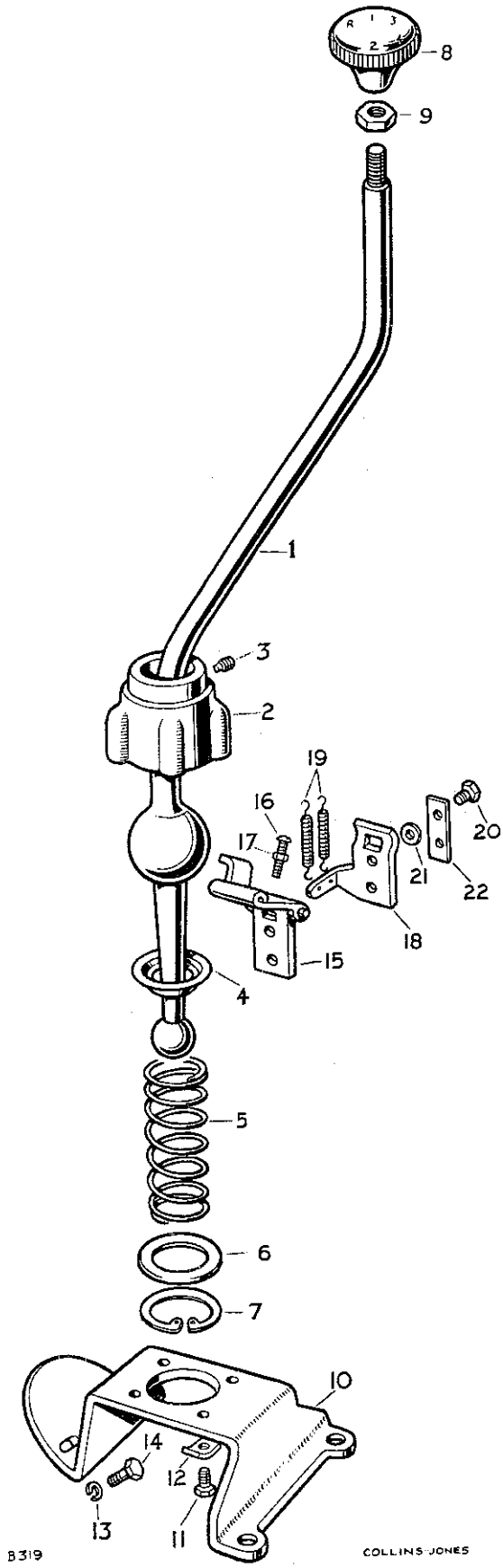

PLAT REF

1
2
3
4
5
6
7
8
9
10
11
12
13
14
15
16
17
18
19
20
21
22

cardiagn.com

MAIN GEAR LEVER

PLATE REF.	1 2 3 4 DESCRIPTION	Qty.	Part No.	REMARKS
	MAIN GEAR CHANGE LEVER ASSEMBLY	1	239927	R.H.D.
	MAIN GEAR CHANGE LEVER ASSEMBLY	1	239928	L.H.D.
1	Gear change lever	1	239925	R.H.D.
	Gear change lever	1	239926	L.H.D.
2	Housing for lever	1	219714	
3	Locating pin for lever ball	1	237423	
4	Spherical seat for gear lever	1	219721	
5	Retaining spring for lever	1	219723	
6	Retaining plate for spring	1	219722	
7	Circlip fixing retaining plate	1	219797	
8	Knob for lever	1	217735	
9	Locknut ($\frac{1}{2}$") for knob	1	3237	
10	Mounting plate for gear change	1	232608	
11	Set bolt ($\frac{5}{16}$" Whit. x $\frac{13}{16}$" long) } Fixing housing to mounting plate	4	215648	
12	Locker	4	2499	
13	Spring washer } Fixing mounting plate to bell housing	2	3074	
14	Set bolt ($\frac{1}{4}$" Whit x $\frac{21}{32}$" long)	2	215593	
15	Reverse stop hinge complete	1	219717	
16	Adjusting screw } For hinge	1	76653	
17	Locknut (2 B.A.)	1	2247	
18	Bracket for reverse stop spring	1	231115	
19	Spring for reverse stop	1	231116	
20	Set bolt (2 B.A x $\frac{13}{32}$" long) } Fixing hinge and bracket to reverse selector shaft	2	215755	
21	Plain washer	2	2260	
22	Locker	1	3421	

cardiagn.com

FOUR WHEEL DRIVE SELECTORS AND TRANSFER GEAR LEVER

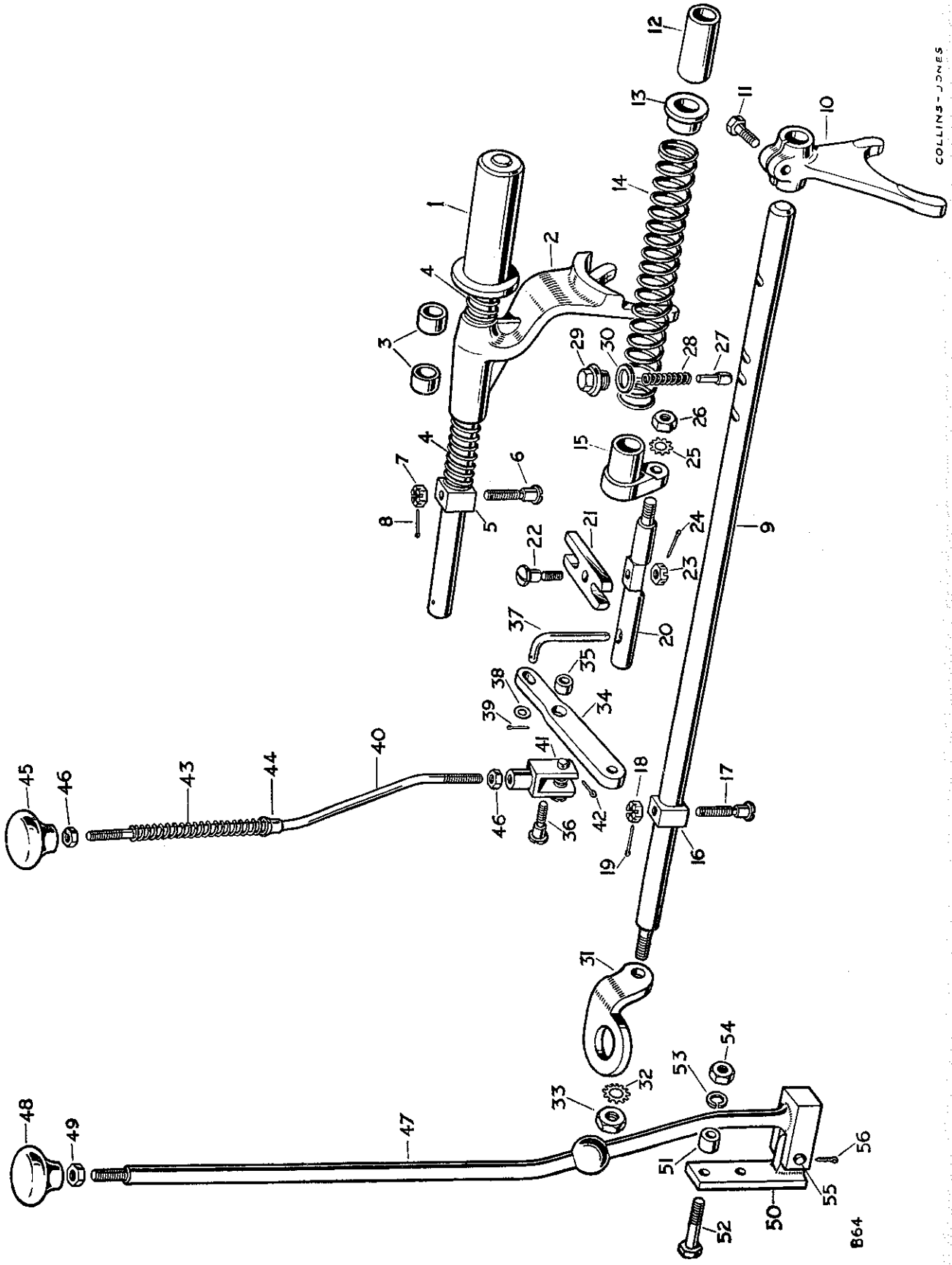

PLATE REF.
1
2
3
4
5
6
7
8
9
10
11
12
13
14
15
16
17
18
19
20
21
22
23
24
25
26
27
28
29
30
31
32
33
34
35
36
37
38
39
40
41
42
42
44
45
46
47
48
49

oldmanualsonline.com

FOUR WHEEL DRIVE SELECTORS AND TRANSFER GEAR LEVER

PLATE REF.	1 2 3 4 DESCRIPTION	Qty.	Part No.	REMARKS
1	Selector shaft, four wheel drive	1	233416	
2	Selector fork complete, four wheel drive	1	233397	
3	Bush for selector fork	2	217521	
4	Spring for selector fork	2	233449	
5	Block for selector shaft	1	233406	
6	Special screw } Fixing block	1	233409	
7	Castle nut ($\frac{5}{16}$") } to selector	1	251601	
8	Split pin } shaft	1	2422	
9	Selector shaft, transfer gear change	1	233398	
10	Selector fork, transfer gear change	1	217584	
11	Set bolt ($\frac{5}{16}$" x 1" long) fixing fork	1	215164	
12	Distance tube for transfer selector shaft	1	233438	
13	Locating bush for selector shaft spring	1	233437	
14	Spring for gear change selector shaft	1	217445	
15	Connector, gear change to pivot shaft	1	233436	
16	Block for selector shaft	1	233406	
17	Special screw } Fixing block	1	233409	
18	Castle nut ($\frac{5}{16}$") } to selector	1	251601	
19	Split pin } shaft	1	2422	
20	Pivot shaft for selector shafts	1	233408	
21	Coupling, selector shafts to pivot	1	233407	
22	Special screw } Fixing	1	234252	
23	Castle nut ($\frac{5}{16}$") } coupling to	1	251601	
24	Split pin } pivot shaft	1	2422	
25	Shakeproof washer } Fixing pivot shaft	1	73352	
26	Nut ($\frac{3}{8}$") } to connector	1	2827	
27	Plunger for transfer selector shaft	1	235416	
28	Spring for plunger	1	56102	
29	Plug } Retaining	1	233441	
30	Joint washer for plug } plunger	1	213960	
31	Link for selector shaft	1	232944	
32	Shakeproof washer } Fixing link to	1	77626	
33	Special nut } selector shaft	1	3764	
34	LEVER ASSEMBLY, FOUR WHEEL DRIVE	1	233414	
35	Bush for lever	1	230086	
36	Special bolt, lever to housing	1	233410	
37	Locking pin, four wheel drive lever	1	232464	
38	Plain washer } Fixing locking	1	2876	
39	Split pin } pin to lever	1	2389	
40	Selector rod, four wheel drive	1	233442	
41	Clevis complete for rod	1	215808	
42	Split pin for clevis	1	2389	
42	Spring for selector rod	1	233450	
44	Special bush for spring	1	234658	
45	Control knob for rod	1	232813	
46	Locknut ($\frac{1}{4}$") for knob and clevis	2	2823	
47	Transfer gear change lever complete	1	219729	
48	Knob for gear change lever	1	219521	
49	Locknut for knob	1	3764	

cardiagn.com

FOUR WHEEL DRIVE SELECTORS AND TRANSFER GEAR LEVER

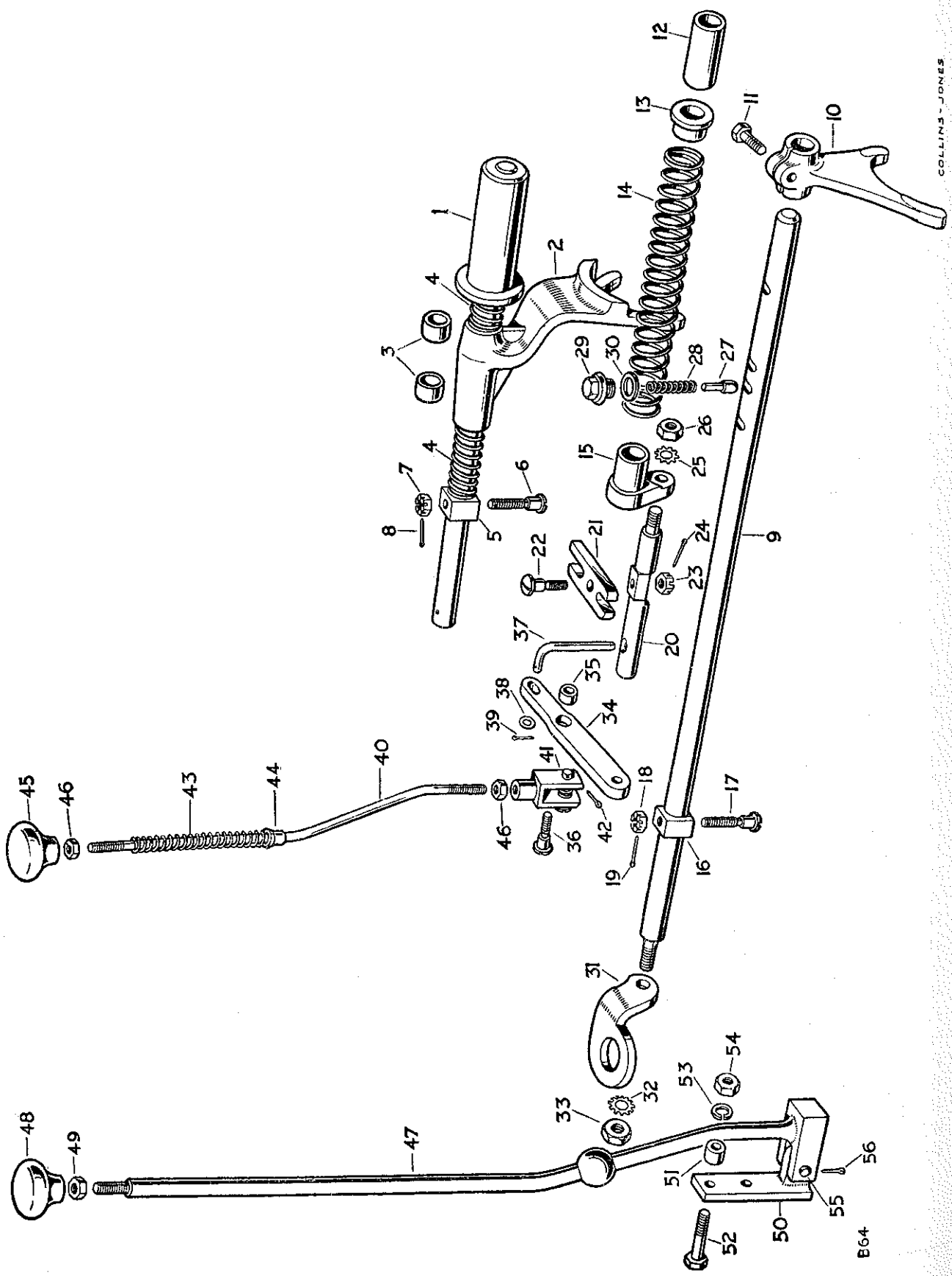

PLAT REF.
50
51
52
53
54
55
56

cardiagn.com

FOUR WHEEL DRIVE SELECTORS AND TRANSFER GEAR LEVER

PLATE REF.	1 2 3 4	DESCRIPTION	Qty.	Part No.	REMARKS
50		Bracket for gear change lever	1	219709	
51		Distance piece for bracket	2	219804	
52		Bolt ($\frac{5}{16}$" x 1$\frac{19}{32}$" long) } Fixing	2	215170	
53		Spring washer } bracket to	2	3075	
54		Nut ($\frac{5}{16}$") } bell housing	2	2828	
55		Clevis pin } Fixing gear lever	1	216421	
56		Split pin } to bracket	1	2392	

COLLINS - JONES

cardiagn.com

REAR AXLE AND PROPELLER SHAFT

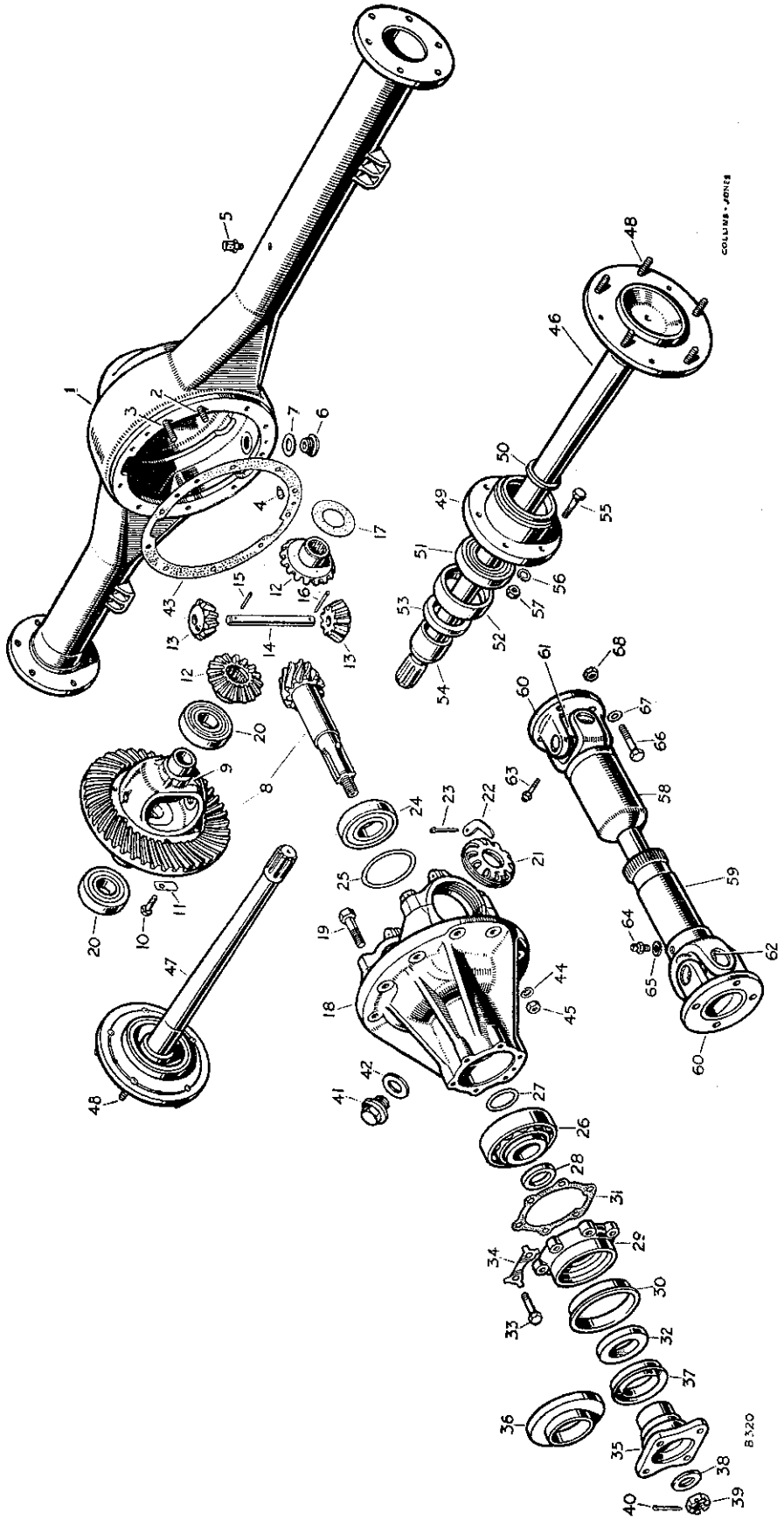

REAR AXLE AND PROPELLER SHAFT

PLATE REF.	1 2 3 4 DESCRIPTION	Qty.	Part No.	REMARKS
	REAR AXLE ASSEMBLY 4.7 ratio	1	234027	
1	Rear axle casing complete	1	232470	
2	Special bolt, short } Fixing differential	4	01565	
3	Special bolt, long } housing to	6	01564	
	Plain washer } axle casing	10	2208	
4	Dowel locating differential housing	2	55705	
5	Breather complete for rear axle	1	42431	
6	Drain plug for rear axle casing	1	235592	
7	Joint washer for drain plug	1	230509	
	DIFFERENTIAL ASSEMBLY 4.7 ratio	1	231345	
8	Crown wheel and bevel pinion	1	233199	
9	Differential casing	1	07663	
10	Set bolt ($\frac{3}{8}''$ x $1\frac{1}{8}''$ long) } Fixing crown wheel	10	237179	
11	Locker } to differential casing	10	2863	
12	Differential wheel	2	06735	
13	Differential pinion	2	40760	
14	Spindle for pinion	1	11378	
15	Plain pin } For	1	11379	
16	Split pin } spindle	1	2396	
	Thrust washer .040″ } For	2	07902 }	
17	Thrust washer .045″ } differential	2	07904 }	As required
	Thrust washer .050″ } wheels	2	50139 }	
18	Bevel pinion housing complete	1	219635	
19	Special set bolt fixing bearing cap	4	40742	
20	Taper roller bearing for differential	2	41045	
21	Serrated nut } For bearing	2	40756	
22	Lock tab } adjustment	2	40758	
23	Split pin fixing lock tab	2	2766	
24	Bearing for bevel pinion, rear	1	219544	
	Shim .003″ }	As required	230438	
25	Shim .005″ } For rear bearing	As required	230439	
	Shim .010″ } adjustment	As required	230440	
	Shim .020″ }	As required	233678	
26	Bearing for bevel pinion, front	1	219550	
	Shim .003″ }	As required	219547	
27	Shim .005″ } For front bearing	As required	219548	
	Shim .010″ } adjustment	As required	219549	
	Shim .020″ }	As required	233677	
28	Washer for pinion bearing	1	231242	
29	Retainer for oil seal	1	231241	Single type dust shield } Alternative types
	Retainer for oil seal	1	236547	Double type mudshield } check before ordering
30	Mudshield for retainer	1	236546	
31	Joint washer for oil seal retainer	1	233473	
32	Oil seal for pinion	1	217507	
33	Set bolt ($\frac{5}{16}''$ x $\frac{29}{32}''$ long) } Fixing oil	6	215163	
34	Locker } seal retainer	3	41049	
35	Driving flange for bevel pinion	1	236632	Single type } Alternative types,
36	Dust shield for driving flange	1	232811	dust shield } check before ordering
	Driving flange for bevel pinion	1	236632	Double type }
37	Mudshield for driving flange	1	236072	mudshield }

cardiagn.com

REAR AXLE AND PROPELLER SHAFT

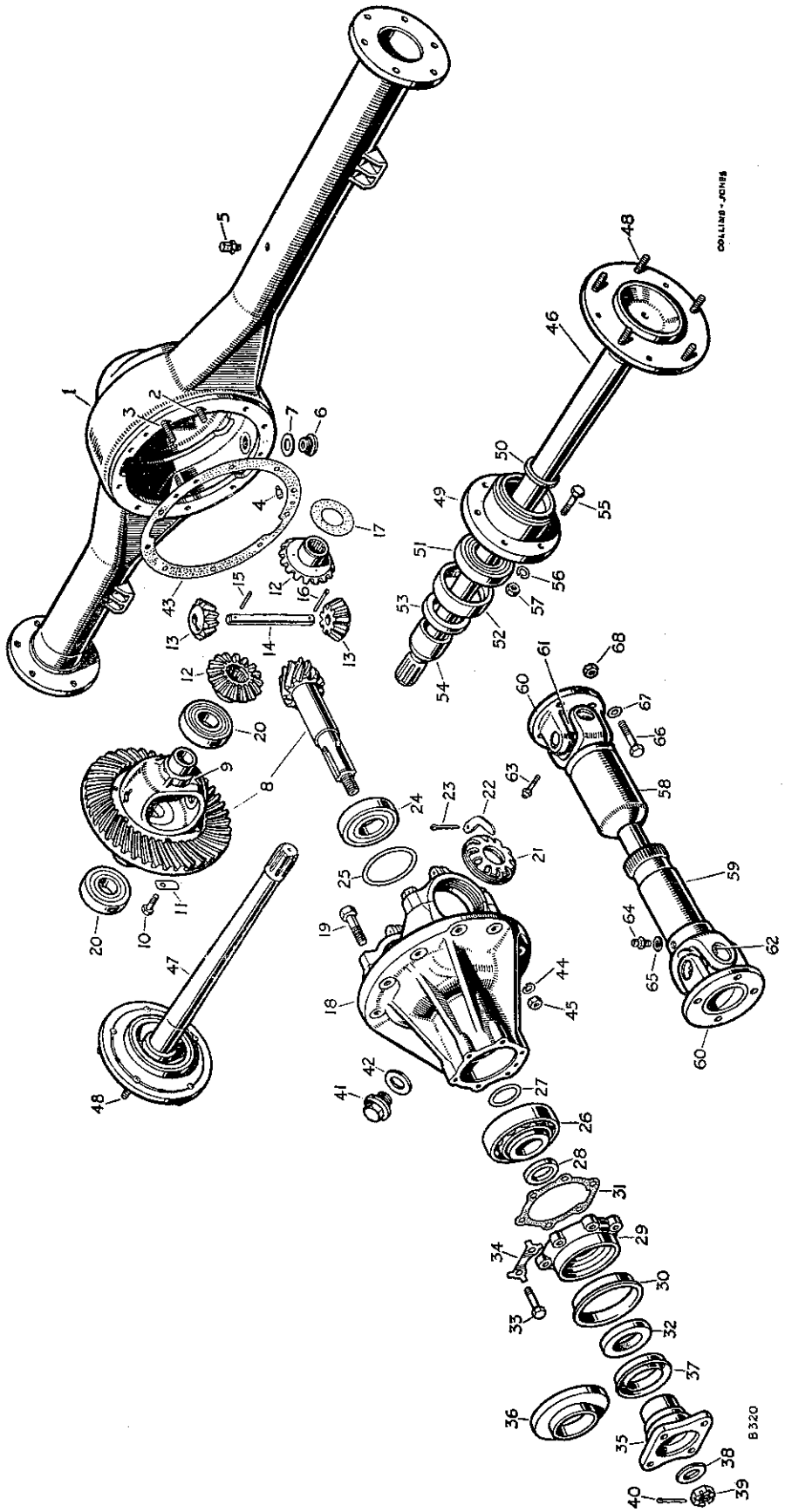

REAR AXLE AND PROPELLER SHAFT

PLATE REF.	1 2 3 4 DESCRIPTION		Qty.	Part No.	REMARKS
38	Plain washer	Fixing	1	2264	
39	Special nut	driving flange to	1	3259	
40	Split pin	bevel pinion	1	2428	
41	Oil filler plug		1	05366	
42	Joint washer for plug		1	06009	
43	Joint washer, differential to axle casing		1	07316	
44	Spring washer	Fixing differential	10	3076	
45	Nut (3/8")	to axle casing	10	2827	
	REAR AXLE SHAFT COMPLETE ASSEMBLY L.H.		1	244337	These assemblies include the brake anchor plate
	REAR AXLE SHAFT COMPLETE ASSEMBLY R.H.		1	244338	
46	REAR AXLE SHAFT ASSEMBLY L.H.		1	231266	
47	REAR AXLE SHAFT ASSEMBLY R.H.		1	231265	
48	Stud for road wheel		10	217360	
49	Bearing housing for rear hub		2	08276	
50	Distance washer for hub bearing		2	07317	
51	Bearing for rear hub		2	07296	
52	Sleeve for oil seal		2	07295	
53	Oil seal for rear hub		2	236923	
54	Hub retaining collar		2	07297	
55	Bolt (3/8" x 1 13/32" long)	Fixing	12	250542	
56	Spring washer	bearing housing	12	3076	
57	Nut (3/8")	to axle case	12	2827	
58	PROPELLER SHAFT ASSEMBLY, REAR		1	231272	
59	Splined end	For propeller	1	262468	
60	Flange	shaft	2	262469	
61	Journal complete for propeller shaft		2	43023	
62	Circlip for journal		8	242522	
63	Grease nipple for journal		2	232557	
64	Grease nipple for shaft sleeve		1	234532	
65	Washer for nipple		1	261428	
66	Bolt (3/8" x 1 1/8" long)	Fixing	4	237341	
67	Plain washer	propeller	8	2208	
68	Self-locking nut (3/8")	shaft	8	50526	

cardiagn.com

FRONT AXLE AND PROPELLER SHAFT

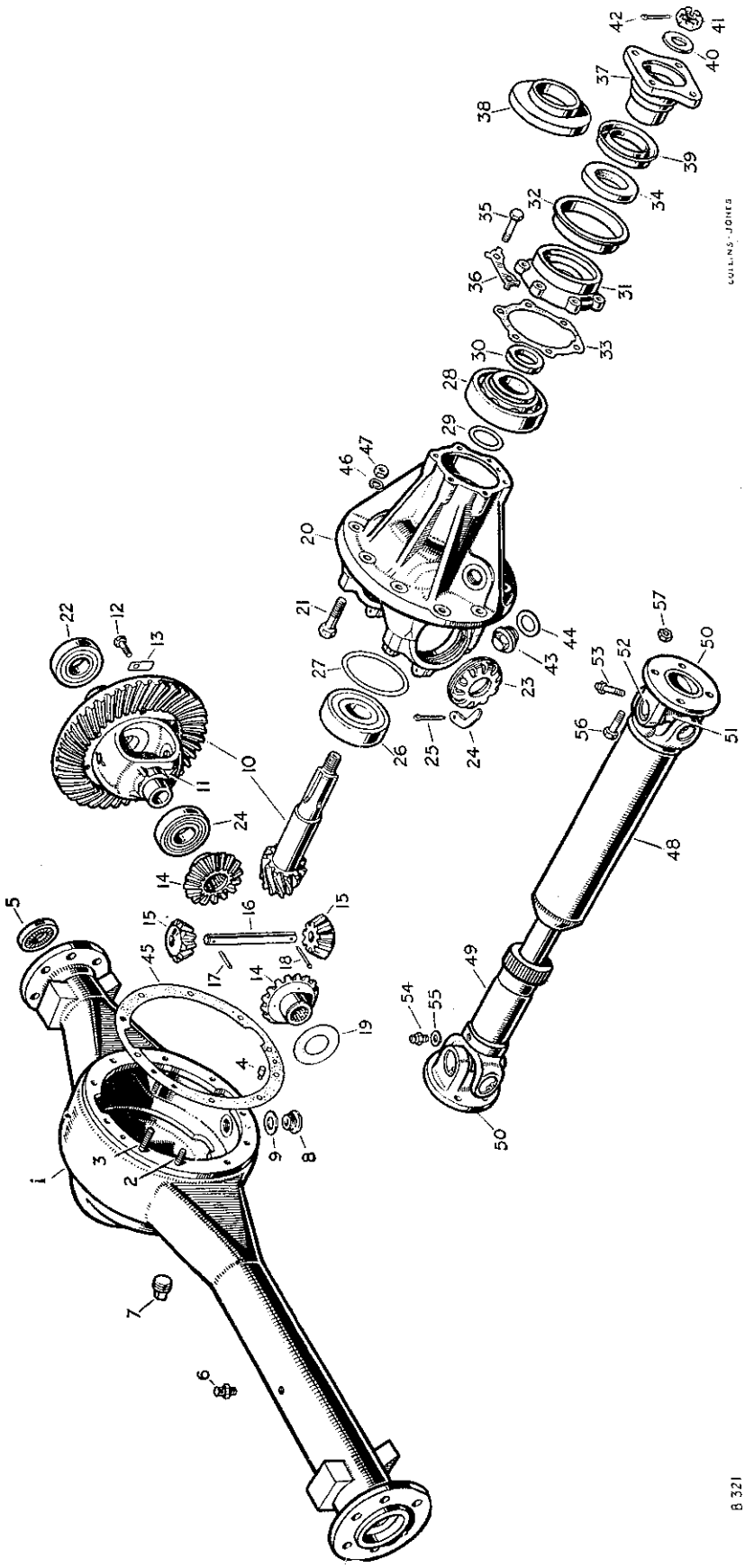

FRONT AXLE AND PROPELLER SHAFT

PLATE REF.	1 2 3 4 DESCRIPTION	Qty.	Part No.	REMARKS
	FRONT AXLE ASSEMBLY 4.7 ratio	1	237990	*R.H.D
	FRONT AXLE ASSEMBLY 4.7 ratio	1	237991	*L.H.D.
1	Front axle casing complete, 2¼" spring seat	1	234565	
2	Special bolt, short } Fixing	4	01565	
3	Special bolt, long } differential housing	6	01564	
	Plain washer } to axle casing	10	2208	
4	Dowel locating differential housing	2	55705	
5	Oil seal in axle casing	2	217400	
6	Breather complete for front axle	1	42431	
7	Oil filler plug, front, for axle casing	1	3294	
8	Drain plug for front axle casing	1	235592	
9	Joint washer for drain plug	1	230509	
	DIFFERENTIAL ASSEMBLY 4.7 ratio	1	231345	
10	Crown wheel and bevel pinion	1	233199	
11	Differential casing	1	07663	
12	Set bolt (⅜" x 1⅛" long) } Fixing crownwheel	10	237179	
13	Locker } to differential casing	10	2863	
14	Differential wheel	2	06735	
15	Differential pinion	2	40760	
16	Spindle for pinion	1	11378	
17	Plain pin } For	1	11379	
18	Split pin } spindle	1	2396	
	Thrust washer .040" } For	2	07902	As required
19	Thrust washer .045" } differential	2	07904	As required
	Thrust washer .050" } wheels	2	50139	As required
20	Bevel pinion housing complete	1	219635	
21	Special set bolt fixing bearing cap	4	40742	
22	Taper roller bearing for differential	2	41045	
23	Serrated nut } For bearing	2	40756	
24	Lock tab } adjustment	2	40758	
25	Split pin fixing lock tab	2	2766	
26	Bearing for bevel pinion, pinion end	1	219544	
	Shim .003" }	As required	230438	
27	Shim .005" } For bearing adjustment,	As required	230439	
	Shim .010" } pinion end	As required	230440	
	Shim .020" }	As required	233678	
28	Bearing for bevel pinion, flange end	1	219550	
	Shim .003" }	As required	219547	
29	Shim .005" } For bearing adjustment,	As required	219548	
	Shim .010" } flange end	As required	219549	
	Shim .020" }	As required	233677	
30	Washer for pinion bearing	1	231242	
31	Retainer for oil seal	1	231241	Single type dust shield } Alternative types,
	Retainer for oil seal	1	236547	Double type mudshield } check before ordering
32	Mudshield for retainer	1	236456	
33	Joint washer for oil seal retainer	1	233473	
34	Oil seal for pinion	1	217507	
35	Set bolt (5/16" x 29/32" long) } Fixing oil	6	215163	
36	Locker } seal retainer	3	41049	
37	Driving flange for bevel pinion	1	236632	Single type } Alternative types, check
38	Dust shield for driving flange	1	232811	dust shield } before ordering
	Driving flange for bevel pinion	1	236632	Double type }
39	Mudshield for driving flange	1	236072	mudshield }

* Front axle assemblies include brakes tracta joints, front hubs and steering linkage

cardiagn.com

FRONT AXLE AND PROPELLER SHAFT

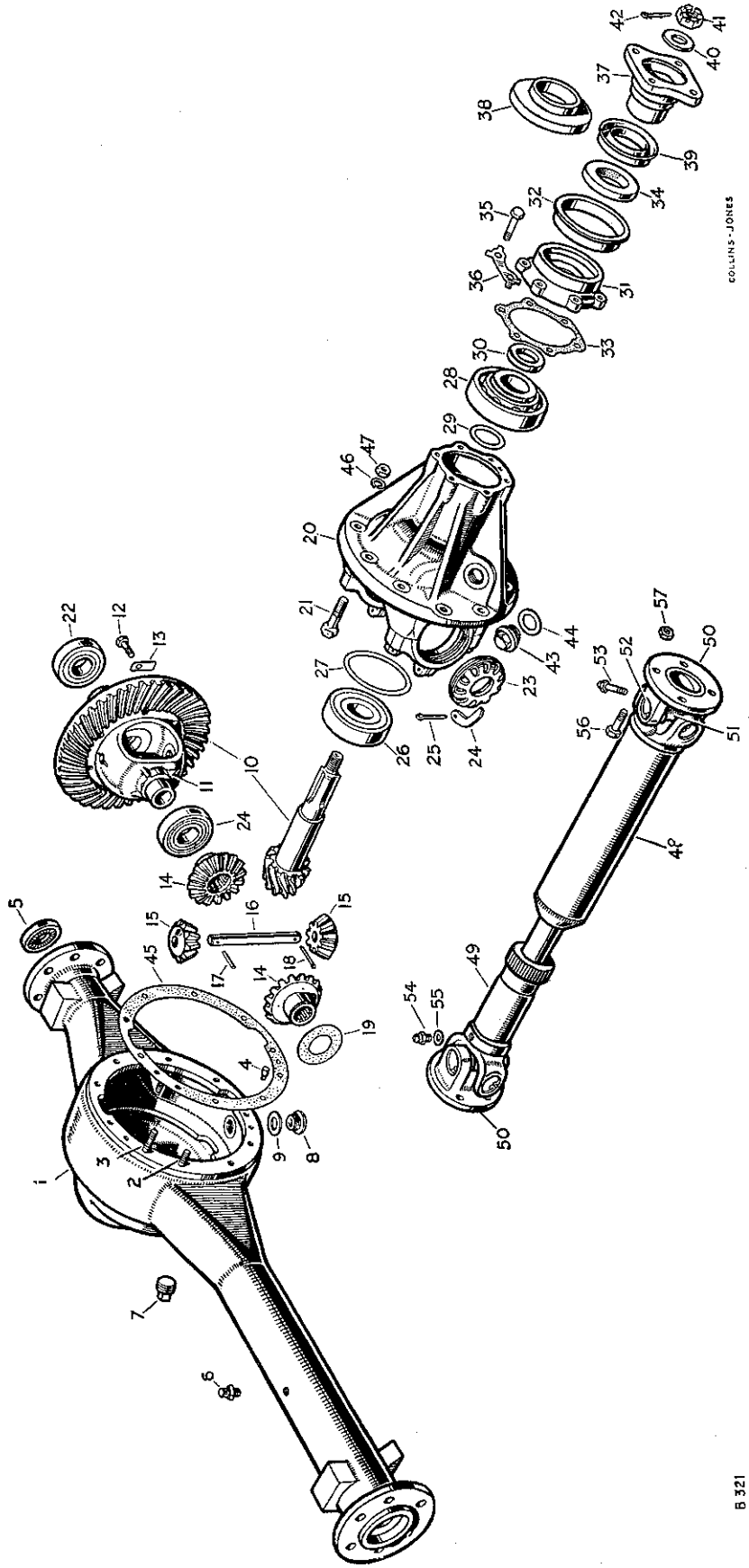

PLATE REF.	
40	
41	
42	
43	
44	
45	
46	
47	
48	F
49	
50	
51	
52	
53	
54	
55	
56	E
57	S

cardiagn.com

FRONT AXLE AND PROPELLER SHAFT

PLATE REF.	1 2 3 4 DESCRIPTION	Qty.	Part No.	REMARKS
40	Plain washer } Fixing	1	2264	
41	Special nut } driving flange	1	3259	
42	Split pin } to bevel pinion	1	2428	
43	Oil filler plug } In differential	1	05366	
44	Joint washer for plug } casing	1	06009	
45	Joint washer, differential to axle casing	1	07316	
46	Spring washer } Fixing differential	10	3076	
47	Nut (3/8") } to axle casing	10	2827	
48	PROPELLER SHAFT ASSEMBLY, FRONT	1	236398	
49	Splined shaft } For propeller	1	262468	
50	Flange } shaft	2	262469	
51	Journal complete for propeller shaft	2	43023	
52	Circlip for journal	8	242522	
53	Grease nipple for journal	2	232557	
54	Grease nipple for shaft sleeve	1	234532	
55	Washer for nipple	1	261428	
56	Bolt (3/8" x 1 1/8" long) } Fixing	8	237341	
57	Self-locking nut (3/8") } propeller shaft	8	50526	

cardiagn.com

TRACTA JOINTS AND FRONT HUBS

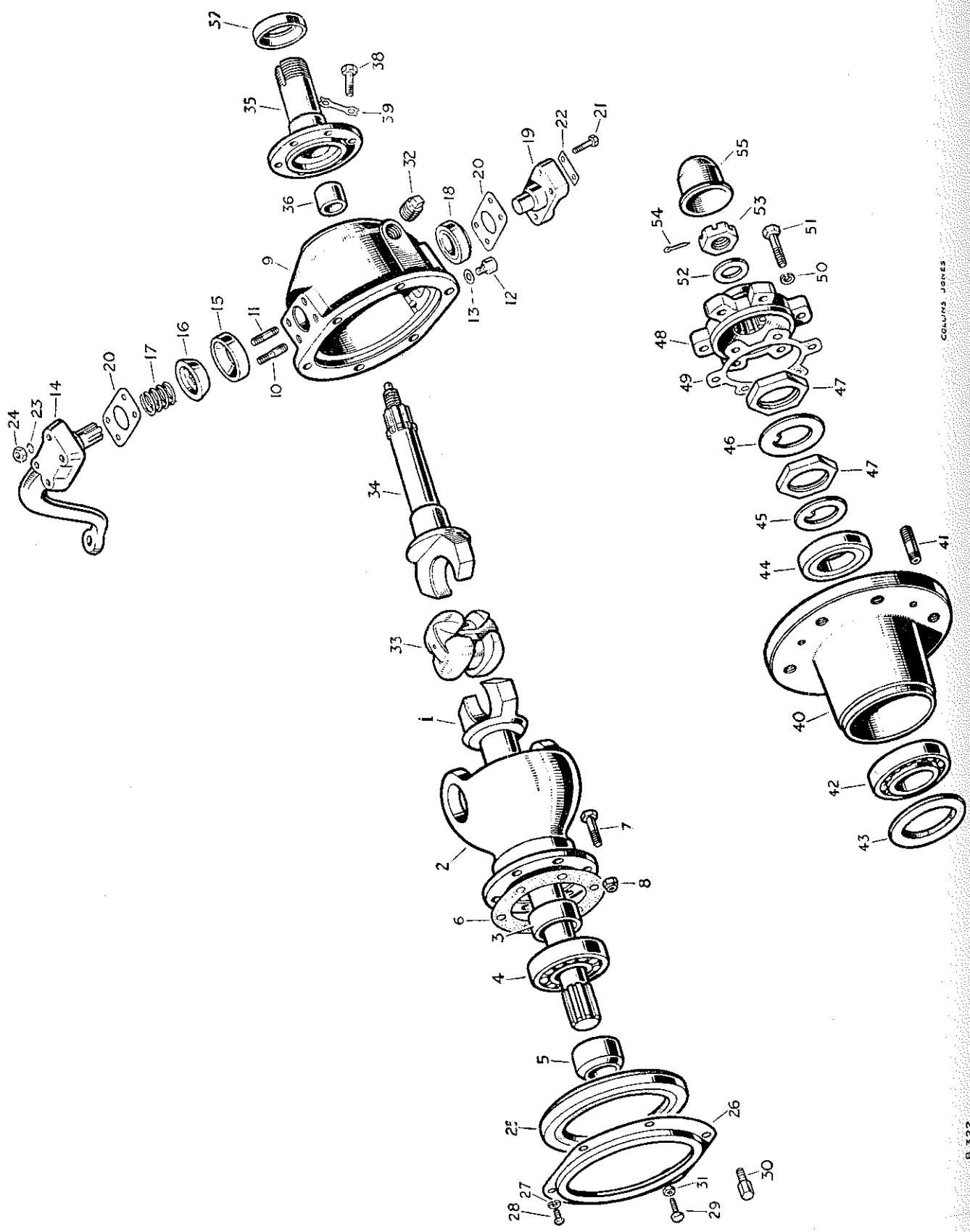

PLATE REF.

1
2
3
4
5
6
7
8
9
10
11
12
13
14
15
16
17
18
19
20
21
22
23
24
25
26
27
28
29
30
31

cardigr.com

TRACTA JOINTS AND FRONT HUBS

PLATE REF.	1 2 3 4 DESCRIPTION	Qty.	Part No.	REMARKS
	HALF SHAFT ASSEMBLY FOR FRONT AXLE L.H.	1	231181	
	HALF SHAFT ASSEMBLY FOR FRONT AXLE R.H.	1	231182	
	Half shaft for front axle L.H.	1	217289	
1	Half shaft for front axle R.H	1	217288	
2	Housing for swivel pin bearing	2	217282	
3	Distance piece for bearing	2	217399	
4	Bearing for half shaft	2	55713	
5	Retaining collar for bearing	2	217398	
6	Joint washer for housing	2	232413	
7	Bolt ($\frac{3}{8}$" x $1\frac{3}{16}$" long) } Fixing housing to	12	237341	
8	Self-locking nut ($\frac{3}{8}$") } front axle casing	12	50526	
	HOUSING ASSEMBLY FOR SWIVEL PIN L.H	1	236534	
9	HOUSING ASSEMBLY FOR SWIVEL PIN R.H.	1	236535	
10	Special stud for steering lever and bracket	2	217468	
11	Stud for steering lever	6	217469	
12	Drain plug for housing	2	236070	
13	Joint washer for drain plug	2	230511	
	SWIVEL PIN AND STEERING LEVER ASSEMBLY OVERHAUL KIT	1	266750	
	Swivel pin and steering lever complete, L.H.	1	237236	R.H.D.
14	Swivel pin and steering lever complete, R.H	1	237237	R.H.D
	Swivel pin and steering lever complete, L.H.	1	237238	L.H.D.
	Swivel pin and steering lever complete, R.H	1	237239	L.H.D.
15	Cone seat for swivel pin, top	2	230858	
16	Cone bearing for swivel pin, top	2	237240	
17	Spring for cone bearing	2	242742	
	Swivel pin only, splined	2	230900	
	Grooved pin fixing swivel pin	2	50453	
18	Bearing for swivel pin, bottom	2	217268	
19	Swivel pin and bracket complete	2	217421	
	Shim .003" }	As required	230007	
20	Shim .005" } For swivel	As required	217453	
	Shim .010" } pin bearing	As required	217454	
	Shim .030" }	As required	217455	
21	Set bolt ($\frac{3}{8}$" x $1\frac{1}{4}$" long }	8	250542	
22	Locker } Fixing swivel pin to	4	270287	
23	Spring washer } swivel pin housing	8	3076	
24	Nut ($\frac{3}{8}$") }	8	2827	
25	Oil seal for swivel pin bearing housing	2	217334	
26	Retainer for oil seal	2	235968	
27	Spring washer }	10	3074	
28	Set bolt ($\frac{1}{4}$" x $\frac{3}{8}$" long) } Fixing	10	237138	
29	Adjustable lock stop bolt } retainer to swivel	2	231918	6" tyres
30	Lock stop bolt } pin housing	2	233175	7" tyres
31	Locknut ($\frac{1}{4}$") for stop bolt }	2	2823	

cardiagn.com

TRACTA JOINTS AND FRONT HUBS

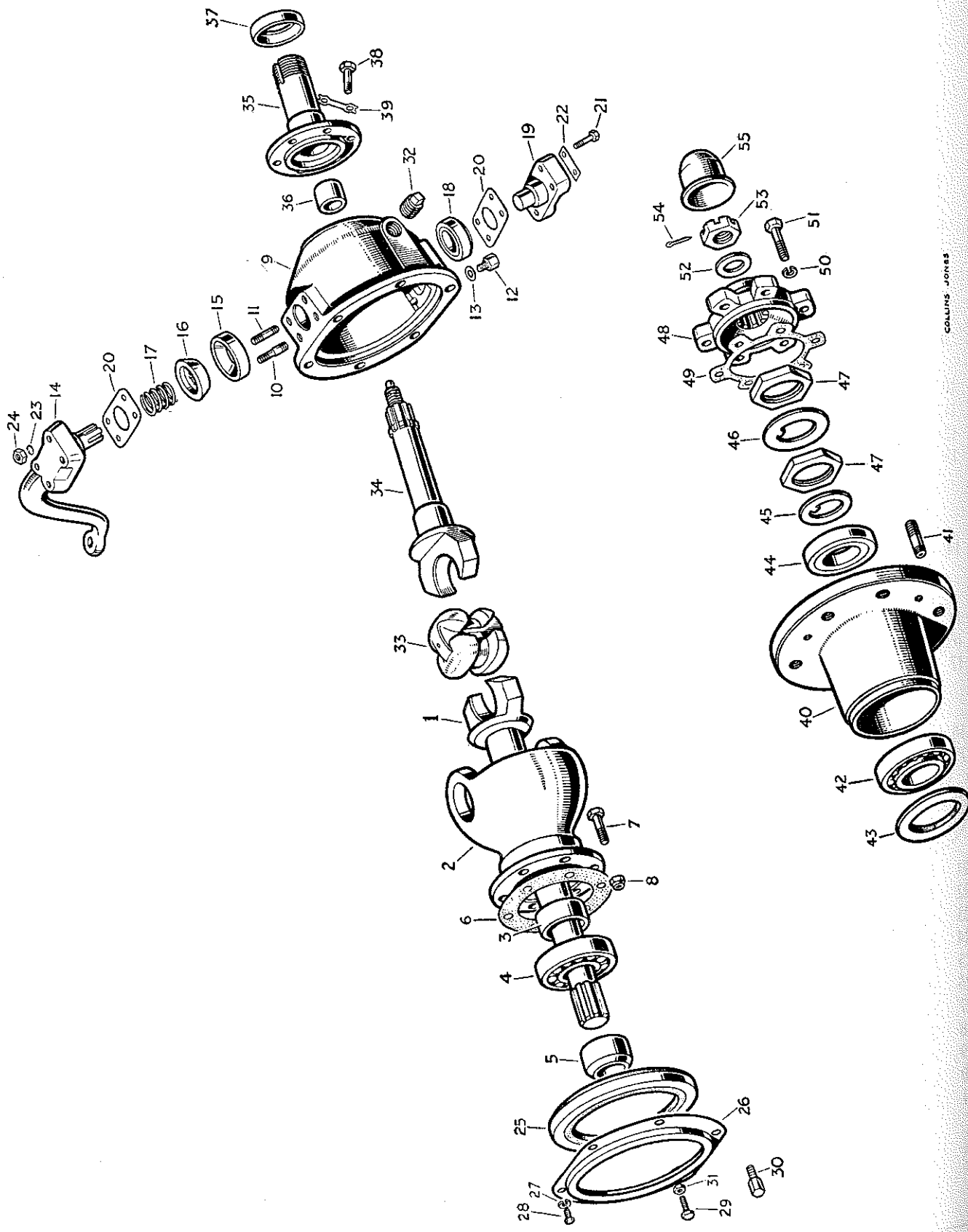

PLATE REF.
32
33
34
35
36
37
38
39
40
41
42
43
44
45
46
47
48
49
50
51
52
53
54
55

cardiagn.com

TRACTA JOINTS AND FRONT HUBS

PLATE REF.	1 2 3 4 DESCRIPTION	Qty.	Part No.	REMARKS
32	Oil filler plug for swivel pin housing	2	3292	
33	Tracta joint complete	2	217333	
34	Driving shaft for front hub	2	217290	
35	STUB AXLE ASSEMBLY	2	217422	
36	Bush for driving shaft	2	217354	
37	Distance piece for inner bearing	2	217351	
38	Set bolt ($\frac{3}{8}$" x 1" long) } Fixing stub axle to	12	237339	
39	Locker } swivel pin housing	6	277311	
40	FRONT HUB ASSEMBLY	2	217423	
41	Stud for road wheel	10	217360	
42	Bearing for front hub, inner	2	217269	
43	Oil seal for inner bearing	2	239422	
44	Bearing for front hub, outer	2	217270	
45	Key washer }	2	217352	
46	Locker } Fixing front hub bearing	2	217353	
47	Special nut }	4	217355	
48	Driving member for front hub	2	217378	
49	Joint washer for driving member	2	213505	
50	Spring washer } Fixing driving	12	3076	
51	Set bolt ($\frac{3}{8}$" x $1\frac{19}{32}$" long) } member to front hub	12	215331	
52	Plain washer } Fixing	2	3300	
53	Slotted nut } driving member	2	3259	
54	Split pin } to driving shaft	2	2428	
55	Hub cap, front	2	219098	

cardiagn.com

STEERING COLUMN

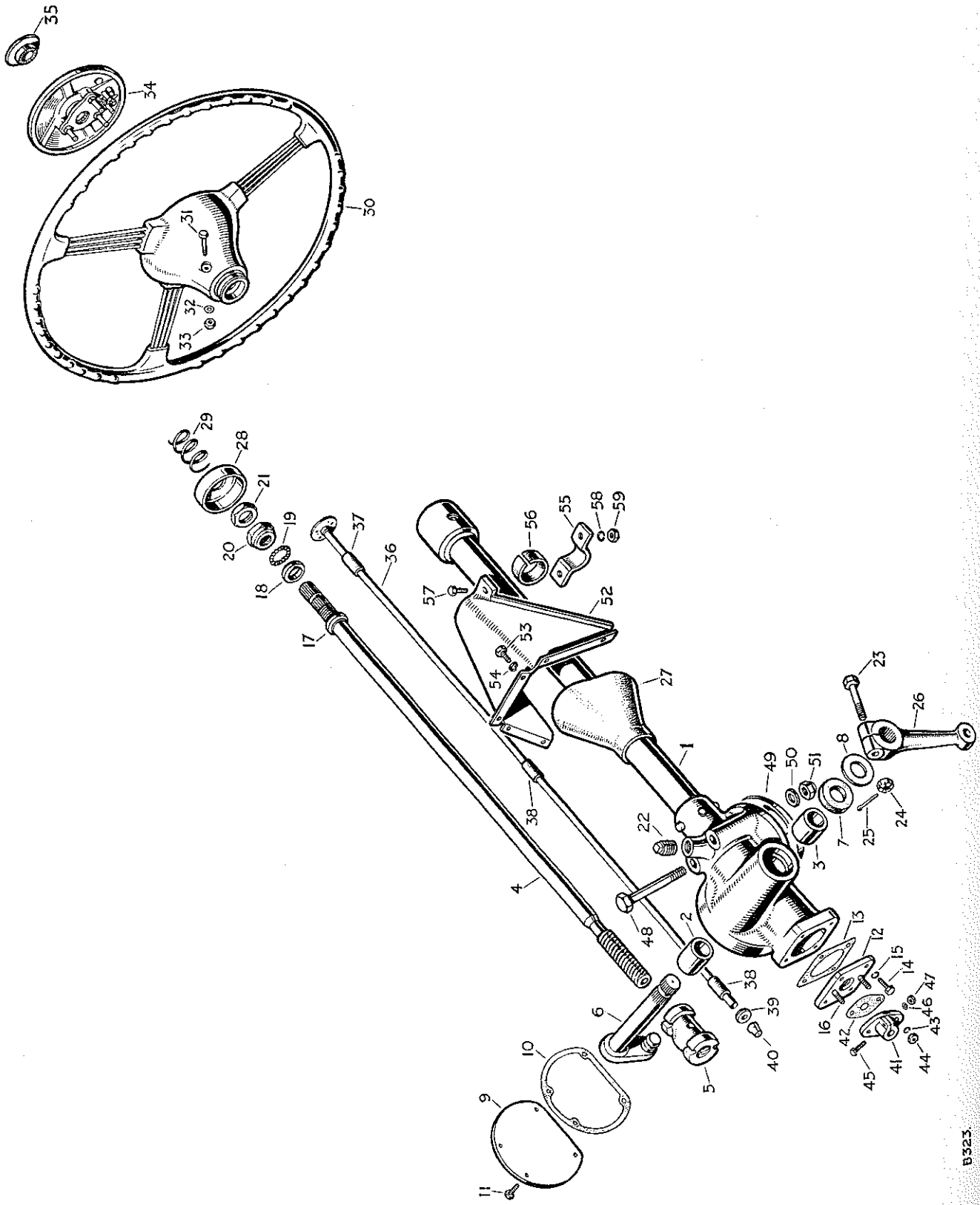

PLATE REF.
1
2
3
4
5
6
7
8
9
10
11
12
13
14
15
16
17
18
19
20
21
22
23
24
25
26
27
28
29
30
31
32
33
34
35
36
37
38
39
40
41
42
43
44

www.mgcars.org.uk

STEERING COLUMN

PLATE REF.	1 2 3 4 DESCRIPTION	Qty.	Part No.	REMARKS
	STEERING COLUMN ASSEMBLY	1	242294	R.H.D.
	STEERING COLUMN ASSEMBLY	1	242295	L.H.D.
1	STEERING BOX ASSEMBLY	1	261422	R.H.D.
	STEERING BOX ASSEMBLY	1	261423	L.H.D
2	Bush for rocker shaft, inner, grooved	1	42709	
3	Bush for rocker shaft, outer, plain	1	42705	
4	Inner column and nut	1	242302	R.H.D.
	Inner column and nut	1	242303	L.H.D.
5	Main nut only	1	50682	R.H.D.
	Main nut only, .010" O.S.	1	262153	R.H.D.
	Main nut only	1	260031	L.H.D.
	Main nut only, .010" O.S.	1	261619	L.H.D
6	Rocker shaft for steering box	1	261434	
7	Cork washer for rocker shaft	2	239773	
8	Retaining washer for cork	1	42257	
9	Side cover plate for steering box	1	261426	
10	Joint washer for cover plate	1	42250	
11	Bolt ($\frac{1}{4}$" x $\frac{5}{8}$" long) fixing cover plate	4	215053	
12	Bottom cover plate for steering box	1	42699	
13	Joint washer for cover plate	1	40394	
14	Bolt ($\frac{1}{4}$" x $\frac{11}{16}$" long) } Fixing	4	6936	
15	Spring washer } bottom cover	4	3074	
16	Stud for control tube clamp	2	40405	
17	Fixed ball race }	1	42707	
18	Ball race ring } At top of	1	42708	
19	Steel ball ($\frac{7}{32}$" dia.) } steering	18	40797	
20	Adjustable ball race } column	1	40396	
21	Locknut for ball race }	1	40397	
22	Oil filler plug	1	42255	
23	Special bolt }	1	40401	
24	Castle nut ($\frac{7}{16}$") } Fixing drop arm	1	251618	
25	Split pin }	1	2425	
26	Drop arm	1	242259	
27	Rubber grommet for steering column	1	301283	
28	Dust shield for steering column	1	219689	
29	Spring for dust shield	1	219690	
30	Steering wheel	1	232174	
31	Bolt ($\frac{5}{16}$" x $1\frac{29}{32}$" long) } Fixing	1	250530	
32	Plain washer } steering	2	2550	
33	Nut ($\frac{5}{16}$") } wheel	1	2828	
34	Horn button and dipper switch complete	1	272094	
35	Horn button only	1	245227	
	Contact set for horn	1	245228	
36	Control tube complete	1	217349	
37	Felt bush, top of control tube	1	08832	
38	Rubber tube, intermediate	3	07657	
39	Oil retaining washer, bottom of tube	1	07676	
40	Grommet for control tube wires	1	56169	
41	Clamp for control tube	1	07142	
42	Joint washer for clamp	1	07343	
43	Spring washer } Fixing clamp to steering	2	3074	
44	Nut ($\frac{1}{4}$") } box bottom cover	2	2823	

cardiagn.com

STEERING COLUMN

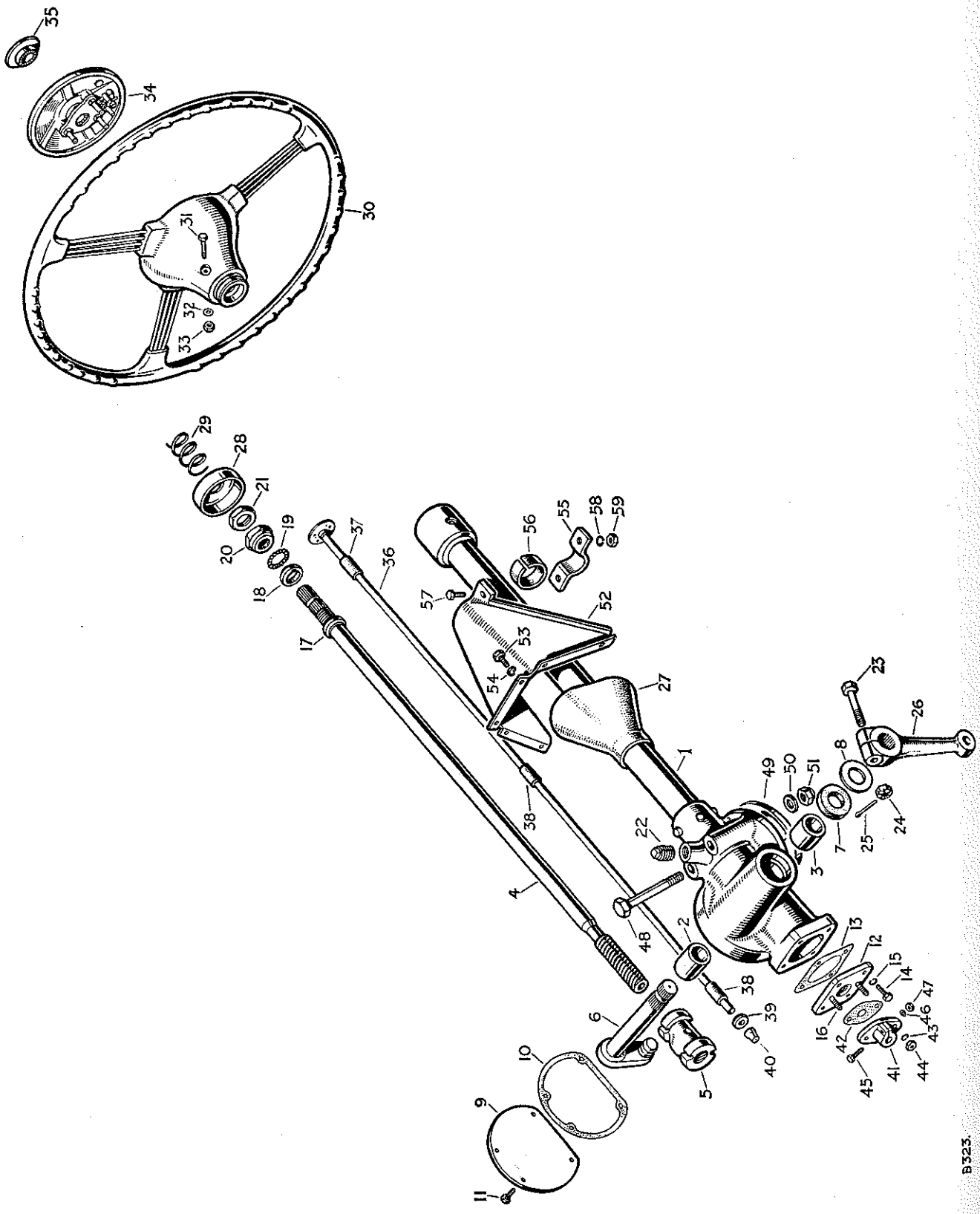

PLATE REF.
45
46
47
48
49
50
51
52
53
54
55
56
57
58
59

cardiagn.com

STEERING COLUMN

PLATE REF.	1 2 3 4 DESCRIPTION		Qty.	Part No.	REMARKS
45	Bolt ($\frac{1}{4}$" x $1\frac{5}{32}$" long)	Fixing	1	237144	
46	Spring washer	control tube	1	3074	
47	Nut ($\frac{1}{4}$")	to clamp	1	2823	
48	Bolt ($\frac{7}{16}$" x $3\frac{9}{16}$" long)		2	215404	
49	Packing plate	Fixing steering	1	302575	
50	Plain washer	box to dash	2	3680	
51	Self-locking nut ($\frac{7}{16}$")		2	50527	
52	Support bracket for steering column		1	300713	
53	Set bolt ($\frac{1}{4}$" x $\frac{9}{16}$" long)	Fixing bracket	6	237139	
54	Spring washer	to dash	6	3074	
55	Clip for steering column		1	300715	
56	Rubber strip for clip		1	300716	
57	Bolt ($\frac{1}{4}$" x $\frac{21}{32}$" long)	Fixing	2	218552	
58	Spring washer	clip to	2	3074	
59	Nut ($\frac{1}{4}$")	support bracket	2	3819	

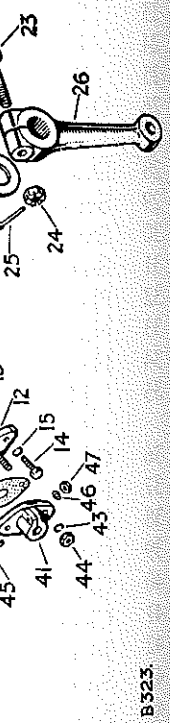

cardiagn.com

STEERING RELAY AND LINKAGE

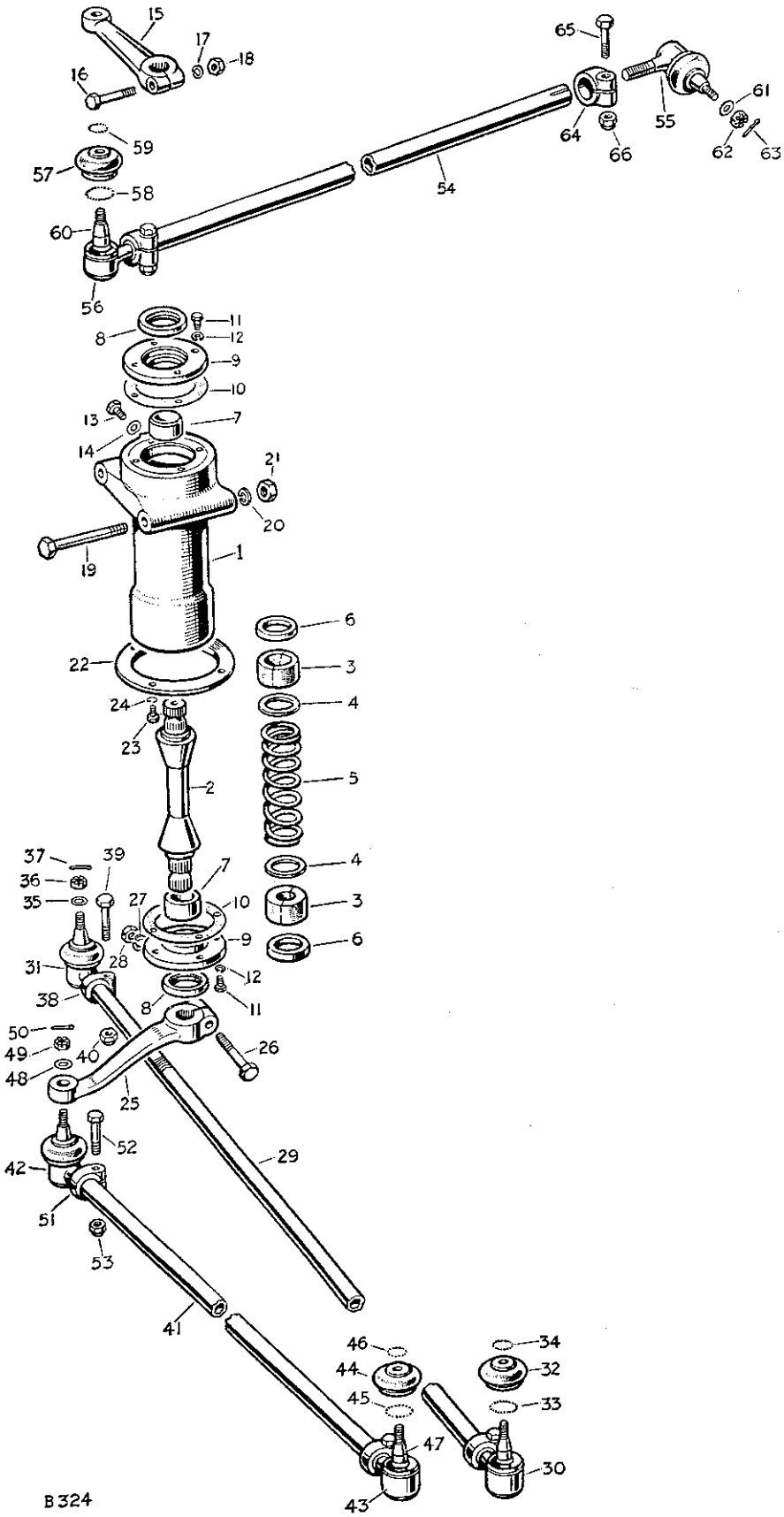

cardiagn.com

STEERING RELAY AND LINKAGE

PLATE REF.	1 2 3 4 DESCRIPTION	Qty.	Part No.	REMARKS
	STEERING RELAY COMPLETE ASSEMBLY	1	232693	
1	Housing for relay shaft	1	230757	
2	Shaft for steering relay levers	1	230762	
3	Split bush for housing	2	230758	
4	Washer for spring	2	230760	
5	Spring for brushes	1	230759	
6	Thrust washer for shaft	2	241388	
7	Distance piece for shaft	2	230184	
8	Oil seal for shaft	2	213340	
9	Retainer for oil seal	2	230294	
10	Joint washer for retainer	2	230295	
11	Special bolt } Fixing retainer	8	231299	
12	Spring washer } to housing	8	3074	
13	Plug for oil hole	1	217510	
14	Joint washer for plug	1	3052	
15	Relay lever, upper	1	242180	
16	Bolt ($\frac{7}{16}$" x $2\frac{5}{32}$" long) }	1	215390	
17	Spring washer } Fixing lever to shaft	1	3077	
18	Nut ($\frac{7}{16}$") }	1	2836	
19	Bolt ($\frac{5}{16}$" x $3\frac{13}{32}$" long) } Fixing	2	237336	
20	Spring washer } housing to	2	3075	
21	Nut ($\frac{5}{16}$") } chassis frame	2	2828	
22	Flange plate for relay mounting	1	217694	
23	Set bolt ($\frac{1}{4}$" x $\frac{5}{8}$" long) } Fixing flange plate	4	215053	
24	Spring washer } to chassis frame	4	3074	
25	Relay lever, lower	1	217365	
26	Bolt ($\frac{7}{16}$" x $2\frac{5}{32}$" long) } Fixing	1	215390	
27	Spring washer } lever	1	3077	
28	Nut ($\frac{7}{16}$") } to shaft	1	2836	
29	STEERING TRACK ROD ASSEMBLY	1	240185	
	Steering track rod only	1	217315	
30	BALL JOINT ASSEMBLY R.H. THREAD	1	231183	
31	BALL JOINT ASSEMBLY L.H. THREAD	1	231184	
32	Rubber cover for ball joint	2	214649	
33	Spring ring, cover to body	2	214685	
34	Spring ring } Cover	2	214684	
	Retainer } to ball	2	214662	
35	Plain washer } Fixing	2	3680	
36	Castle nut } ball joints	2	2822	
37	Split pin } to lever	2	2393	
38	Clip for ball joint	2	218511	
39	Bolt ($\frac{1}{4}$" x $1\frac{1}{2}$" long) } Fixing ball	2	250517	
40	Self-locking nut ($\frac{1}{4}$") } joint clips	2	251320	
41	STEERING DRAG LINK ASSEMBLY	1	240186	
	Steering drag link only	1	217316	
42	BALL JOINT ASSEMBLY R.H. THREAD	1	231183	
43	BALL JOINT ASSEMBLY L.H. THREAD	1	231184	
44	Rubber cover for ball joint	2	214649	
45	Spring ring, cover to body	2	214685	
46	Spring ring } Cover	2	214684	
47	Retainer } to ball	2	214662	

cardiagn.com

STEERING RELAY AND LINKAGE

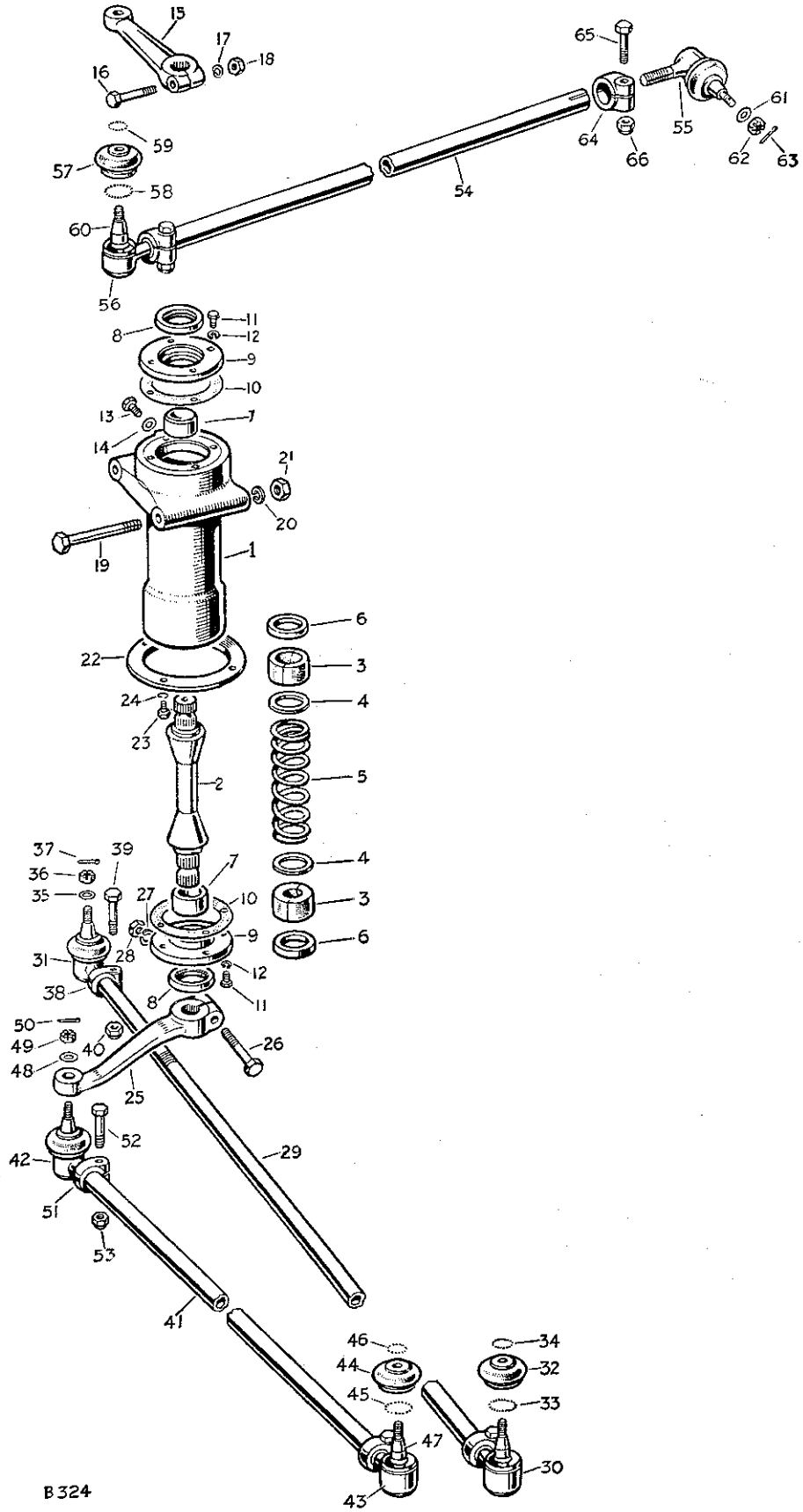

cardiagn.com

STEERING RELAY AND LINKAGE

PLATE REF.	1 2 3 4	DESCRIPTION	Qty.	Part No.	REMARKS
48	Plain washer	Fixing	2	3680	
49	Castle nut	ball joints	2	2822	
50	Split pin	to levers	2	2393	
51	Clip for ball joint		2	218511	
52	Bolt ($\frac{1}{4}''$ x $1\frac{1}{2}''$ long)	Fixing ball joint clips	2	250517	
53	Self-locking nut ($\frac{1}{4}''$)		2	251320	
54	LONGITUDINAL STEERING TUBE ASSEMBLY		1	240187	
	Longitudinal steering tube only		1	217317	
55	BALL JOINT ASSEMBLY R.H. THREAD		1	231183	
56	BALL JOINT ASSEMBLY L.H. THREAD		1	231184	
57	Rubber cover for ball joint		2	214649	
58	Spring ring, cover to body		2	214685	
59	Spring ring	Cover to	2	214684	
60	Retainer	ball	2	214662	
61	Plain washer	Fixing	2	3680	
62	Castle nut	ball joints	2	2822	
63	Split pin	to levers	2	2393	
64	Clip for ball joint	Fixing	2	218511	
65	Bolt ($\frac{1}{4}$ x $1\frac{1}{2}''$ long)	ball joint	2	250517	
66	Self-locking nut ($\frac{1}{4}''$)	clips	2	251320	

cardiagn.com

BRAKES, FOOT

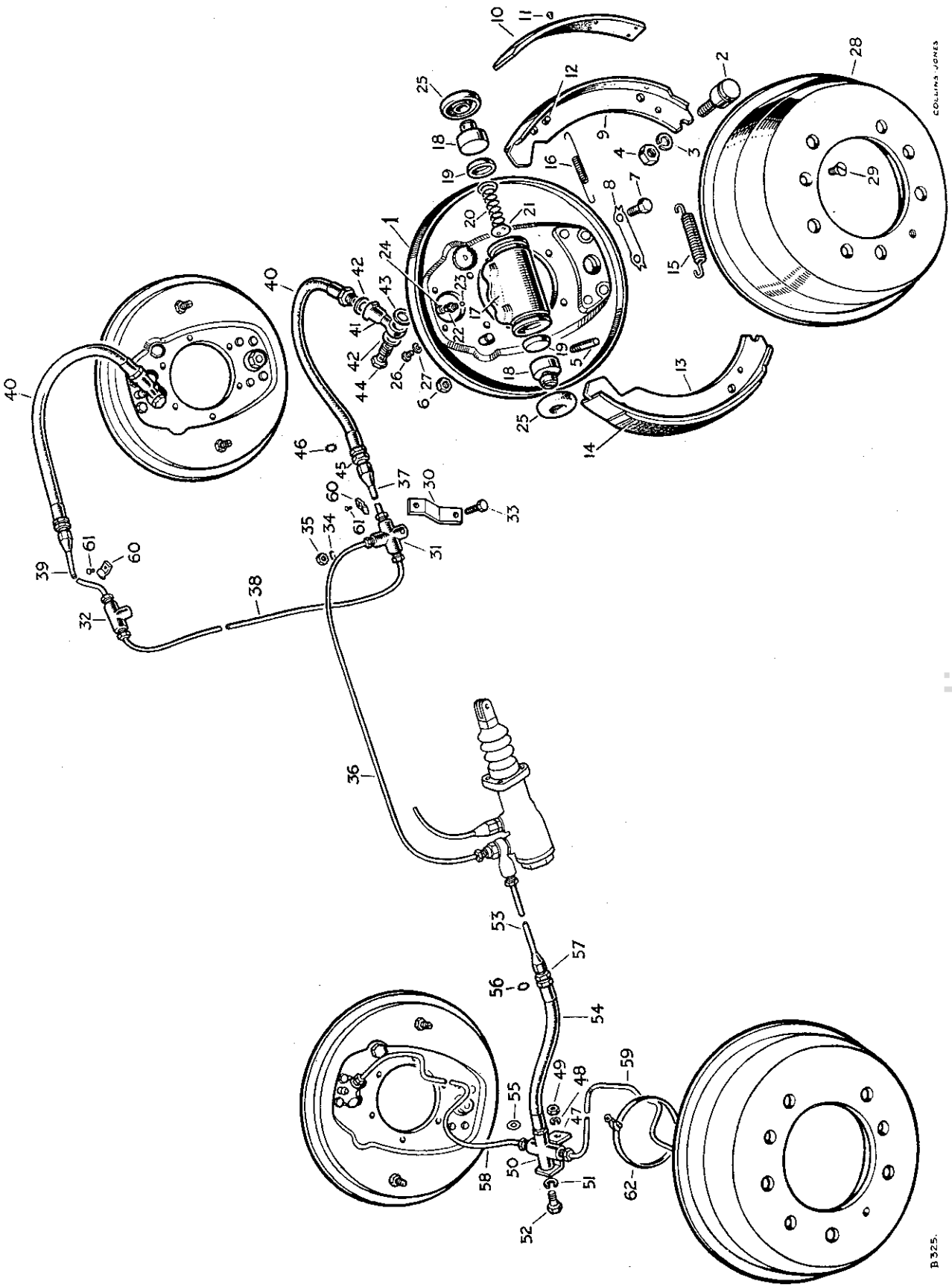

cardiagn.com

BRAKES, FOOT

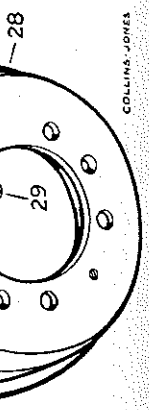

PLATE REF.	1 2 3 4 DESCRIPTION	Qty.	Part No.	REMARKS
	BRAKE ANCHOR PLATE ASSEMBLY, L.H.	2	242387	
1	BRAKE ANCHOR PLATE ASSEMBLY, R.H.	2	243288	
2	Anchor pin for brake shoe	4	218969	
3	Spring washer } Fixing	4	218970	
4	Special nut } anchor pin	4	218971	
5	Shoe steady post	8	219620	
6	Locknut for steady post	8	212835	
7	Set bolt (3/8" x 1" long) } Fixing front anchor	12	237339	
8	Locker } plate to axle case	6	277311	
	Bolt (3/8" x 1 13/32" long) } Fixing rear	12	215329	
	Spring washer } anchor plate	12	3076	
	Nut (3/8") } to axle case	12	2827	
	BRAKE SHOE ASSEMBLY, L.H., BOXED PAIR	2	264039	
9	BRAKE SHOE ASSEMBLY, R.H., BOXED PAIR	2	264040	
10	Lining for brake shoe	8	231438	
11	Rivet fixing lining	80	218975	
12	Spring post for brake shoe	2	232074	
	Anchor for brake shoe	4	236993	
	Locking plate for anchor	4	236995	
	Set bolt fixing anchor	8	238542	
15	Pull-off spring for brake shoe	4	218983	
16	Pull-off spring for leading shoe	4	232098	
	WHEEL CYLINDER ASSEMBLY, L.H., FRONT	1	212913	
	WHEEL CYLINDER ASSEMBLY, R.H., FRONT	1	212912	
	WHEEL CYLINDER ASSEMBLY L.H., REAR	1	232077	
	WHEEL CYLINDER ASSEMBLY R.H., REAR	1	232078	
20	Spring for piston, front	2	212919	
	Spring for piston, rear	2	212943	
21	Washer for spring, front	4	232107	
	Washer for spring, rear	4	242117	
22	Bleed screw	4	212921	
	Repair kit, front	1	275744	
	Repair kit, rear	1	266687	
26	Special set screw } Fixing	8	218984	
27	Spring washer } wheel cylinder	8	219025	
28	Brake drum	4	218149	
29	Set screw fixing brake drum	12	1510	

cardiagn.com

BRAKES, FOOT

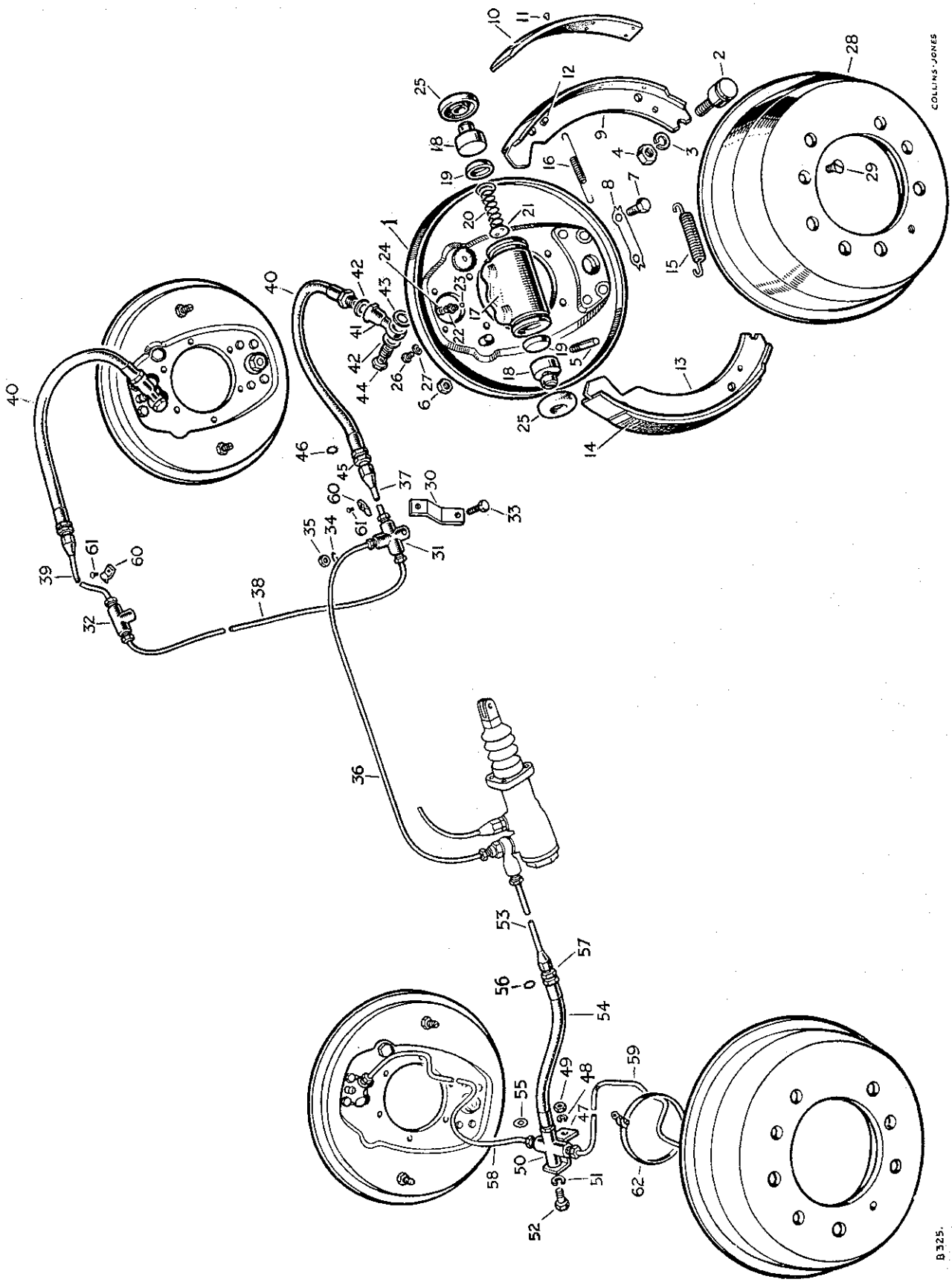

cardiagn.com

BRAKES, FOOT

PLATE REF.	1 2 3 4 DESCRIPTION	Qty.	Part No.	REMARKS
30	Bracket for "T" piece and union	2	235278	
31	"T" piece } For front	1	219827	
32	Double-ended union } brake pipes	1	219828	
33	Bolt ($\frac{1}{4}$" x $1\frac{1}{4}$" long) } Fixing	2	235569	
34	Spring washer } "T" piece and	2	3074	
35	Nut ($\frac{1}{4}$") } union to brackets	2	2823	
36	Brake pipe complete, master cylinder to "T" piece	1	219813	
37	Brake pipe complete, "T" piece to hose	1	219816	
38	Brake pipe complete, "T" piece to union	1	219814	
39	Brake pipe complete, union to hose	1	219816	
40	Hose complete for front wheels	2	219824	
41	Angle banjo }	2	219825	
42	Joint washer, small } Fixing hoses to front	4	216914	
43	Joint washer, large } wheel cylinders	2	216915	
44	Banjo bolt }	2	216910	
45	Special nut } Fixing hoses to brackets	2	216912	
46	Shakeproof washer } on chassis frame	2	216913	
47	Bracket for hose on rear axle	1	219571	
48	Spring washer } Fixing bracket	1	3076	
49	Nut ($\frac{3}{8}$") } to rear axle	1	2827	
50	"T" piece on rear fiaxle	1	219826	
51	Spring washer } Fixing "T" piece	1	3075	
52	Set bolt ($\frac{5}{16}$" x $\frac{19}{32}$" long) } to bracket	1	215759	
53	Brake pipe complete, master cylinder to rear hose	1	219817	R.H.D.
	Brake pipe complete, master cylinder to rear hose	1	219822	L.H.D.
54	Hose complete to rear axle	1	219824	
55	Joint washer, hose to "T" piece	1	216914	
56	Shakeproof washer } Fixing hose	1	216913	
57	Special nut } to bracket	1	216912	
58	Brake pipe complete on rear axle L.H.	1	219818	
59	Brake pipe complete on rear axle R.H.	1	219819	
60	Clip, brake pipes to chassis frame	4	216708	R.H.D.
	Clip, brake pipes to chassis frame	6	216708	L.H.D.
61	Drive screw fixing clips	3	72626	R.H.D.
	Drive screw fixing clips	5	72626	L.H.D.
62	Clip on rear axle	2	11820	

cardiagn.com

BRAKE MASTER CYLINDER AND BRAKE LEVER

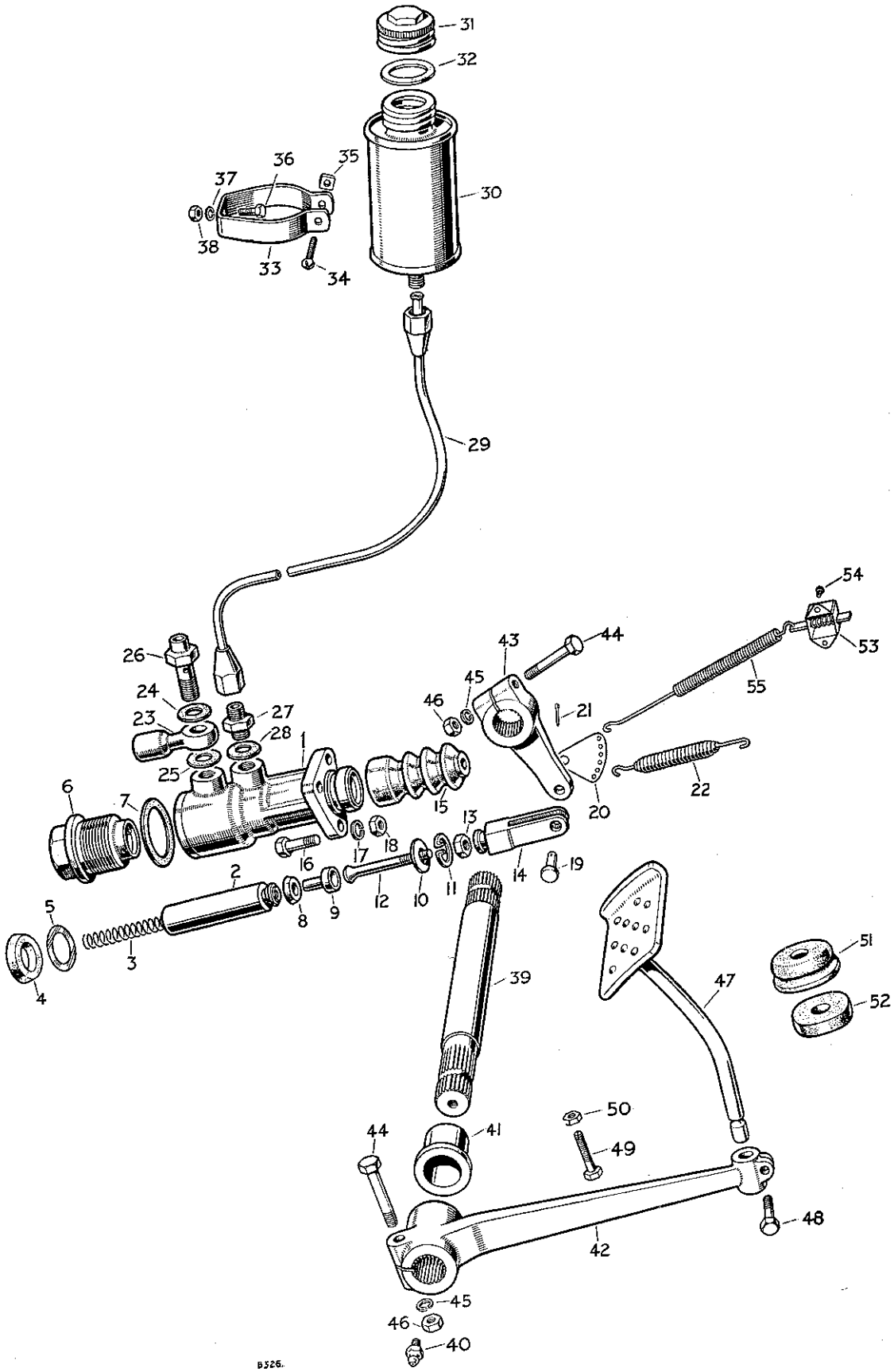

cardiagn.com

BRAKE MASTER CYLINDER AND BRAKE LEVER

PLATE REF.	1 2 3 4 DESCRIPTION	Qty.	Part No.	REMARKS
	BRAKE MASTER CYLINDER ASSEMBLY	1	235006	
3	Return spring for piston	1	217698	
10	Retaining washer for piston	1	217701	
	Repair kit	1	278524	
16	Bolt ($\frac{5}{16}''$ x $\frac{29}{32}''$ long) } Fixing master	3	215163	
17	Spring washer } cylinder to	3	3075	
18	Nut ($\frac{5}{16}''$) } chassis frame	3	2828	
19	Pin for fork end } Fixing fork end	1	218070	
20	Spring anchor, 6 hole type } to brake	1	235010	
21	Split pin } operating lever	1	2422	
22	Pull-off spring for master cylinder	1	07048	
23	Banjo }	1	216909	
24	Joint washer, small } On master cylinder for	1	216914	
25	Joint washer, large } front and rear pipes	1	216915	
26	Banjo bolt }	1	219829	
27	Union } In master cylinder	1	216911	
28	Joint washer } for supply pipe	1	216915	
29	Brake pipe complete, for supply tank	1	230894	R.H.D.
	Brake pipe complete, for supply tank	1	230895	L.H.D.
30	SUPPLY TANK ASSEMBLY FOR MASTER CYLINDER	1	216905	
31	Filler cap for tank	1	260819	
32	Joint washer for cap	1	260820	
33	Clip for tank	1	217636	
34	Special bolt } Fixing clip	1	217637	
35	Special nut } to tank	1	217638	
36	Bolt ($\frac{1}{4}''$ x $\frac{9}{16}''$ long) }	1	237139	
37	Spring washer } Fixing clip to dash	1	3074	
38	Nut ($\frac{1}{4}''$) }	1	2823	
39	Spindle for brake pedal	1	217819	
40	Grease nipple for spindle	1	218073	R.H.D.
	Grease nipple for spindle	1	219697	L.H.D.
41	Bush for spindle	2	218014	
42	Lever for brake pedal	1	217816	
43	Operating lever, brake master cylinder	1	218068	

cardiagn.com

BRAKE MASTER CYLINDER AND BRAKE LEVER

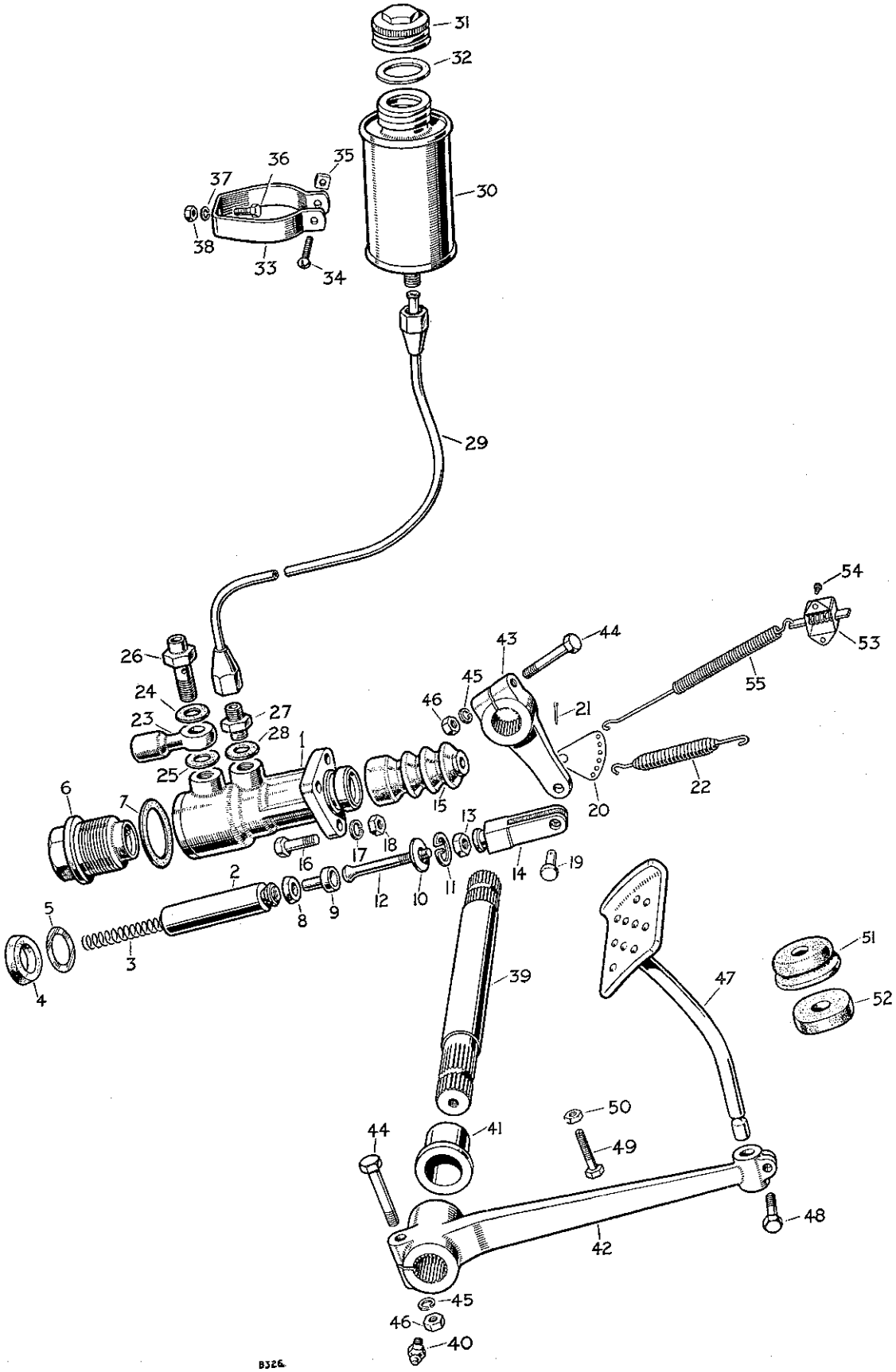

cardiagn.com

BRAKE MASTER CYLINDER AND BRAKE LEVER

PLATE REF.	1 2 3 4 DESCRIPTION	Qty.	Part No.	REMARKS
44	Bolt ($\frac{5}{16}''$ x $1\frac{13}{16}''$ long) } Fixing levers to spindle	2	215172	
45	Spring washer } Fixing levers to spindle	2	3075	
46	Nut ($\frac{5}{16}''$) } Fixing levers to spindle	2	2828	
47	Rod and pad complete for brake pedal	1	240136	R.H.D.
	Rod and pad complete for brake pedal	1	219527	L.H.D.
	Rod and pad complete for brake pedal	1	240136	R.H.D. } Swiss vehicles
	Rod and pad complete for brake pedal	1	240137	L.H.D. } Swiss vehicles
48	Bolt ($\frac{5}{16}''$ x $\frac{29}{32}''$ long) fixing brake rod to lever	1	215163	
49	Special stop bolt for brakes	1	218052	
50	Locknut ($\frac{1}{4}''$) for stop bolt	1	2823	
51	Rubber grommet } For brake pedal rod	1	70620	
52	Felt washer } For brake pedal rod	1	70621	
53	Switch for stop lamp	1	07160	
54	Drive screw fixing switch	2	72626	
55	Spring connecting switch to brake lever, $5\frac{1}{4}''$ long	1	243225	

cardiagn.com

HAND BRAKE LEVER, R.H.D.

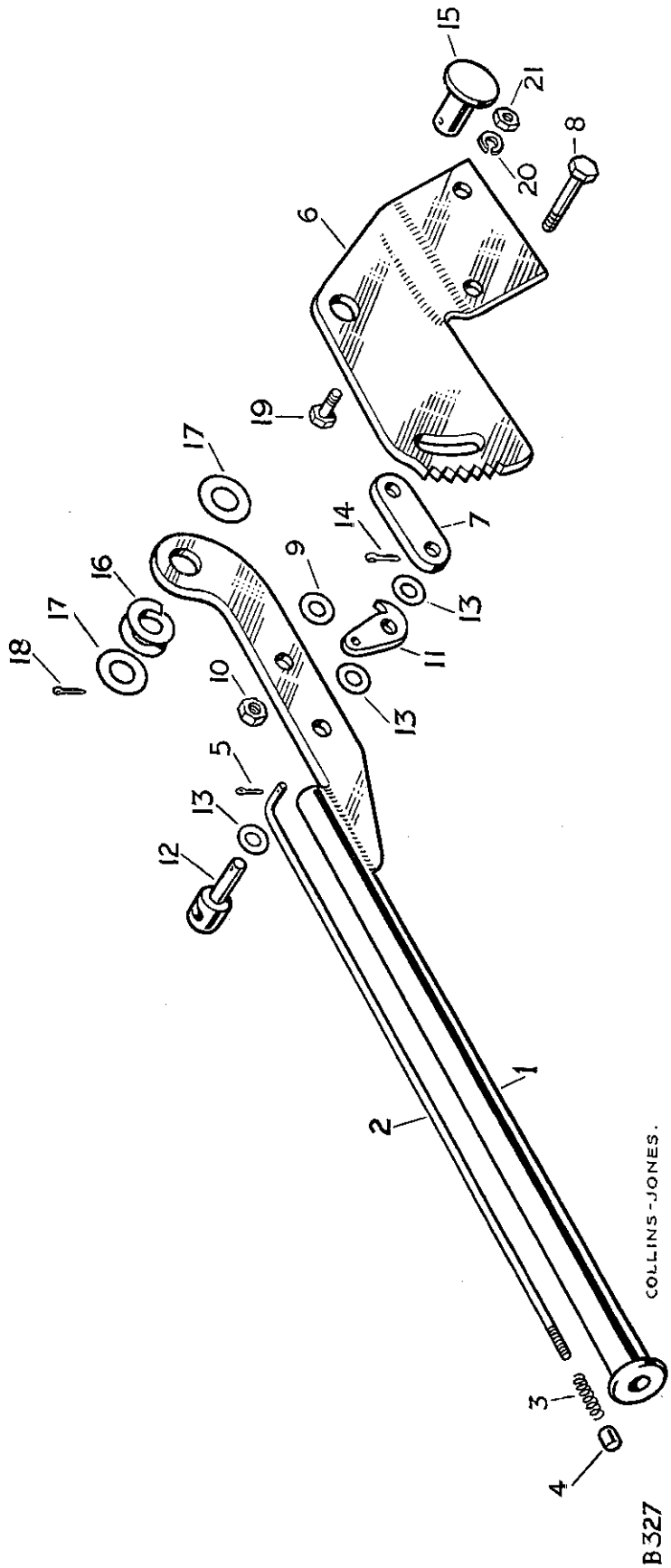

HAND BRAKE LEVER, R.H.D.

PLATE REF.	1 2 3 4	DESCRIPTION	Qty.	Part No.	REMARKS
		HAND BRAKE LEVER ASSEMBLY	1	242133	
1		Hand brake lever	1	231321	*
		Hand brake lever	1	242132	†
2		Plunger rod	1	218381	
3		Spring for plunger rod	1	58702	
		Washer for plunger spring	1	242109	†
4		Plunger	1	231319	*
		Plunger	1	242108	†
5		Split pin fixing rod to catch	1	2388	
6		Ratchet for hand brake	1	218382	
7		Locating plate	1	01384	
8		Bolt ($\frac{3}{8}$" x $1\frac{1}{8}$" long) } Fixing	1	215272	
9		Plain washer } locating plate and	1	2210	
10		Nut ($\frac{3}{8}$") } lever to ratchet	1	2827	
11		Brake catch	1	50235	
12		Pin }	1	07164	
13		Plain washer } Fixing catch to lever	3	2210	
14		Split pin }	1	2392	
15		Fulcrum pin for hand brake	1	231318	
16		Spring washer } Fixing pin	1	2290	
17		Plain washer } to ratchet	1	2218	
18		Split pin } and lever	1	2974	
19		Bolt ($\frac{3}{8}$" x $\frac{29}{32}$" long) } Fixing	2	215270	
20		Spring washer } hand brake	2	3076	
21		Nut ($\frac{3}{8}$") } lever	2	2827	

* Vehicles numbered 26100001 to 36103671, 36163015, 36300006, 36360002 and 36661508

† Vehicles numbered 36103672, 36163016, 36300007, 36360003 and 36661509 onwards

cardiagn.com

HAND BRAKE LEVER, L.H.D.

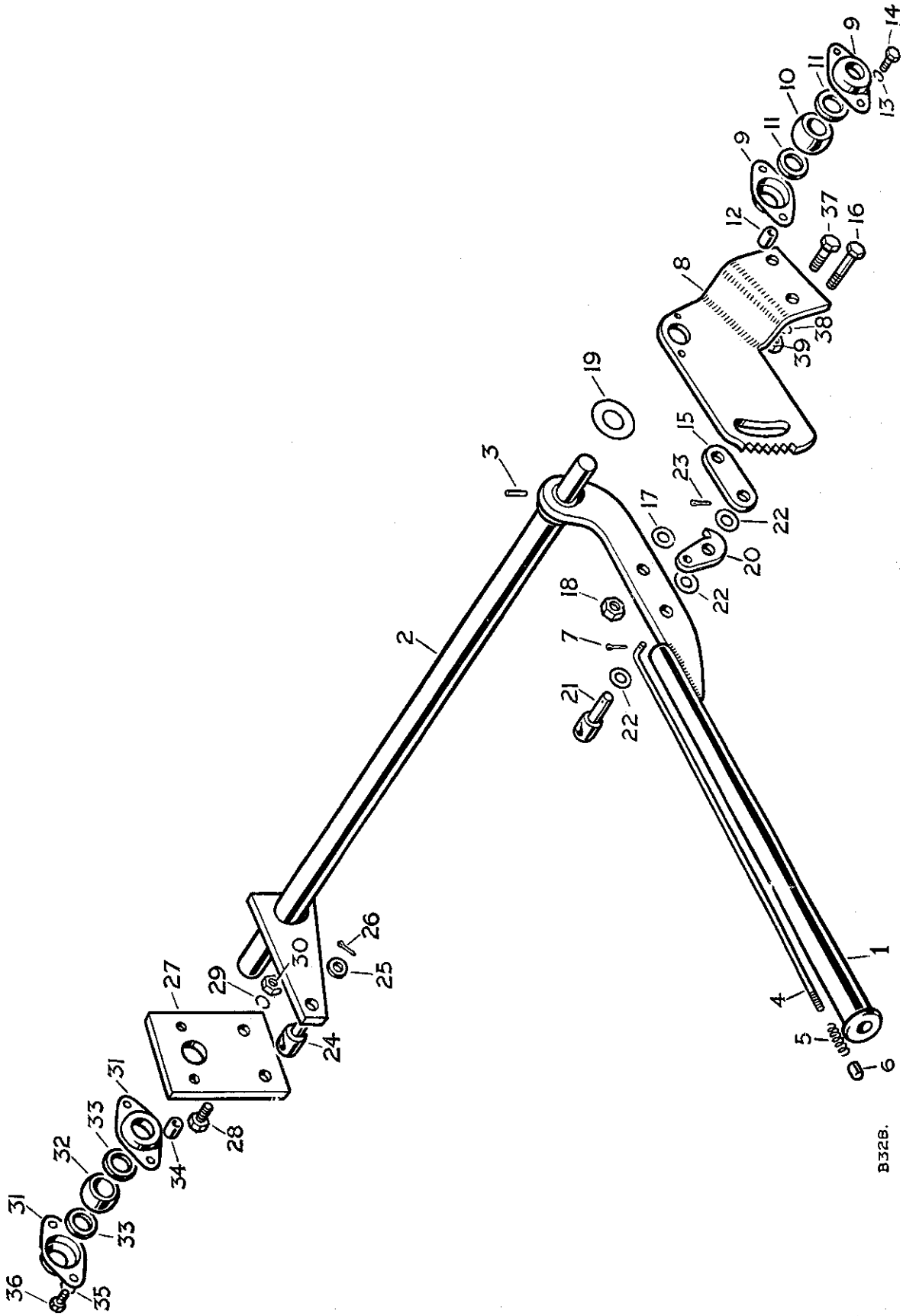

cardiagn.com

HAND BRAKE LEVER, L.H.D.

PLATE REF.	1 2 3 4 DESCRIPTION	Qty.	Part No.	REMARKS
	HAND BRAKE LEVER ASSEMBLY	1	242126	
	Hand brake lever and cross shaft	1	232171	*
	Hand brake lever and cross shaft	1	242111	†
1	Hand brake lever	1	232165	*
	Hand brake lever	1	242110	†
2	Cross shaft for hand brake	1	218402	
3	Pin fixing lever to shaft	1	50472	
4	Plunger rod	1	218381	
5	Spring for plunger rod	1	58702	
	Washer for plunger	1	242109	†
6	Plunger	1	231219	*
	Plunger	1	242108	†
7	Split pin fixing rod to catch	1	2388	
8	Ratchet for hand brake	1	218407	
9	Housing for cross shaft bearing	2	217983	
10	Spherical bearing for cross shaft	1	217984	
11	Felt ring for bearing	2	217985	
12	Distance piece } Fixing bearing	2	218410	
13	Spring washer } and housing	2	3075	
14	Set bolt ($\frac{5}{16}''$ x $\frac{29}{32}''$ long) } to ratchet	2	215163	
15	Locating plate	1	01384	
16	Bolt ($\frac{3}{8}''$ x $1\frac{1}{8}''$ long) } Fixing locating	1	215272	
17	Plain washer } plate and lever	1	2210	
18	Nut ($\frac{3}{8}''$) } to ratchet	1	2827	
19	Plain washer between lever and ratchet	1	2218	
20	Brake catch	1	50235	
21	Pin }	1	07164	
22	Plain washer } Fixing catch to lever	3	2210	
23	Split pin }	1	2392	
24	Pin for hand brake adjuster rod	1	218408	
25	Plain washer } Fixing pin to	1	2208	
26	Split pin } cross shaft lever	1	2392	
27	Support plate for hand brake bearing housing	1	218409	
28	Bolt ($\frac{3}{8}''$ x $\frac{29}{32}''$ long) } Fixing	2	215270	
29	Spring washer } support plate	2	3076	
30	Nut ($\frac{3}{8}''$) } to chassis frame	2	2827	
31	Housing for cross shaft bearing	2	217983	
32	Spherical bearing for cross shaft	1	217984	
33	Felt ring for bearing	2	217985	
34	Distance piece } Fixing housing	2	218410	
35	Spring washer } and bearing to	2	3075	
36	Set bolt ($\frac{5}{16}''$ x $\frac{29}{32}''$ long) } support plate	2	215163	
37	Bolt ($\frac{3}{8}''$ x $\frac{29}{32}''$ long) }	2	215270	
38	Spring washer } Fixing hand brake lever	2	3076	
39	Nut ($\frac{3}{8}''$) }	2	2827	

* Vehicles numbered 26130001 to 36133347 36330004, 36633653 † Vehicles numbered 36133348, 36330005 and 36633654 onwards.

cardiagn.com

HAND BRAKE, TRANSMISSION

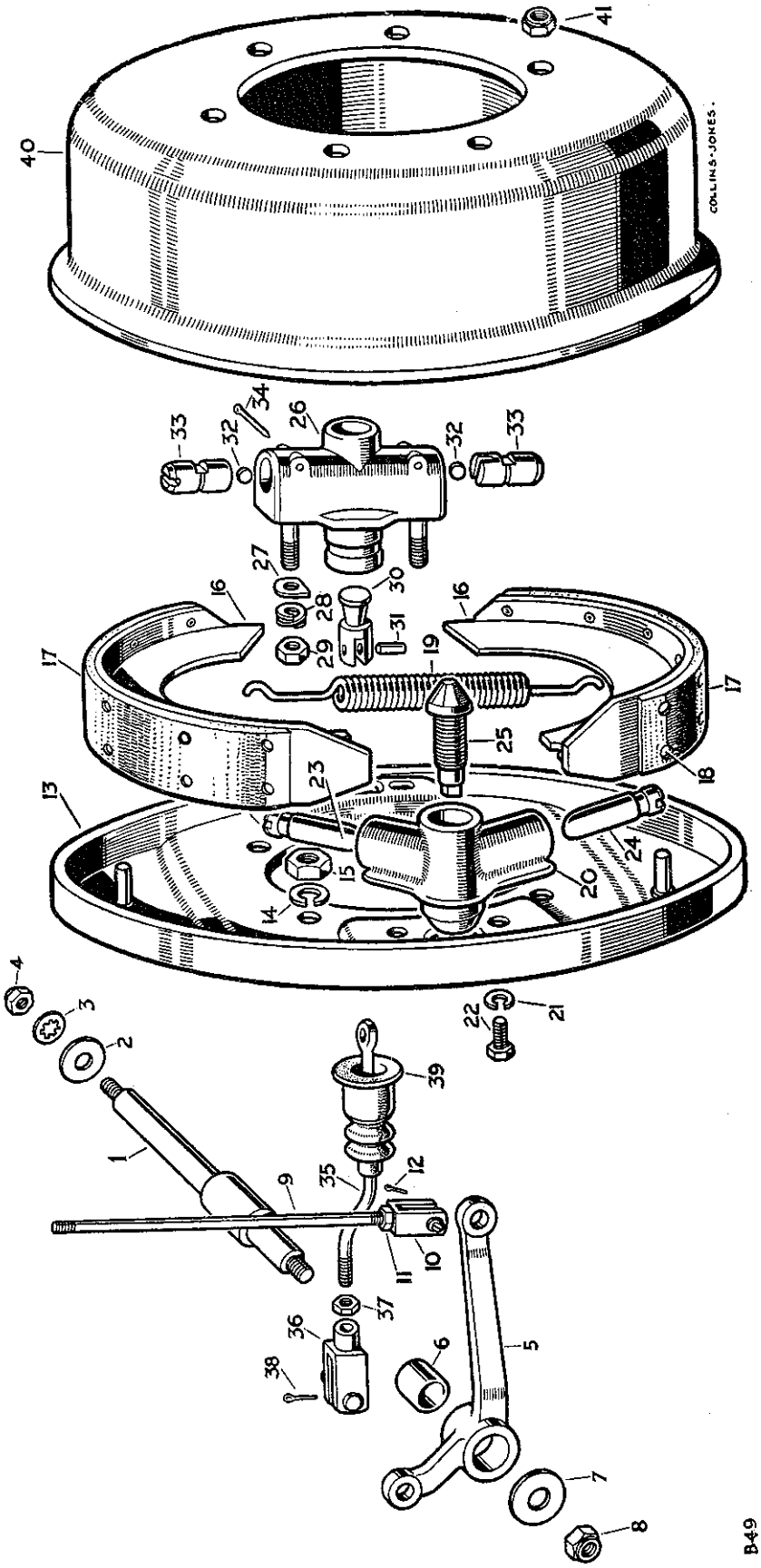

PLATE REF.
1
2
3
4
5
6
7
8
9
10
11
12
13
14
15
16
17
18
19
20
21
22
23
24
25
26
27
28
29
30
31
32
33
34
35
36
37
38
39
40
41

HAND BRAKE, TRANSMISSION

PLATE REF.	1 2 3 4 DESCRIPTION	Qty.	Part No.	REMARKS
1	Spindle for hand brake relay lever	1	218388	
2	Plain washer } Fixing	1	2441	
3	Shakeproof washer } spindle to	1	72001	
4	Nut ($\frac{7}{16}$") } chassis frame	1	2836	
5	RELAY LEVER ASSEMBLY FOR HAND BRAKE	1	218414	
6	Bush for relay lever	1	218386	
7	Plain washer } Fixing lever	1	2441	
8	Self-locking nut ($\frac{7}{16}$") } to spindle	1	251323	
9	Brake rod, relay to hand brake lever	1	218387	
10	Clevis complete } Fixing brake rod	1	215809	
11	Locknut ($\frac{5}{16}$") } to relay and	3	2828	
12	Split pin } hand brake lever	1	2392	
13	Anchor plate, transmission brake	1	219002	
14	Spring washer } Fixing anchor plate to	4	3076	
15	Nut ($\frac{3}{8}$") } speedometer housing	4	2827	
16	BRAKE SHOE ASSEMBLY	2	219005	
17	Lining for shoe	2	219007	
18	Rivet for lining	20	242467	
19	Pull-off spring for brake shoe	2	219023	
20	Adjuster housing	1	219010	
21	Spring washer } Fixing	2	219025	
22	Set bolt } adjuster housing	2	219024	
23	Plunger R.H.	1	219011	
24	Plunger L.H.	1	219012	
25	Adjuster cone	1	219013	
26	Expander housing	1	230741	
27	Special washer }	2	219022	
28	Spring washer } Fixing expander housing	2	219027	
29	Simmonds nut }	2	232361	
30	Expander cone	1	219021	
31	Pin fixing cone to brake rod	1	219017	
32	Roller for expander	2	219018	
33	Plunger for expander	2	219019	
34	Split pin fixing plunger	2	219020	
35	Brake rod, expander to relay lever	1	218391	
36	Clevis complete } Fixing	1	215809	
37	Locknut ($\frac{5}{16}$") } brake rod	1	2828	
38	Split pin } to relay lever	1	2392	
39	Dust cover for brake rod	1	219028	
40	Brake drum	1	217536	
41	Self-locking nut ($\frac{5}{16}$") fixing brake drum	6	50525	

cardiagn.com

CHASSIS FRAME, ROAD SPRINGS AND SHOCK ABSORBERS

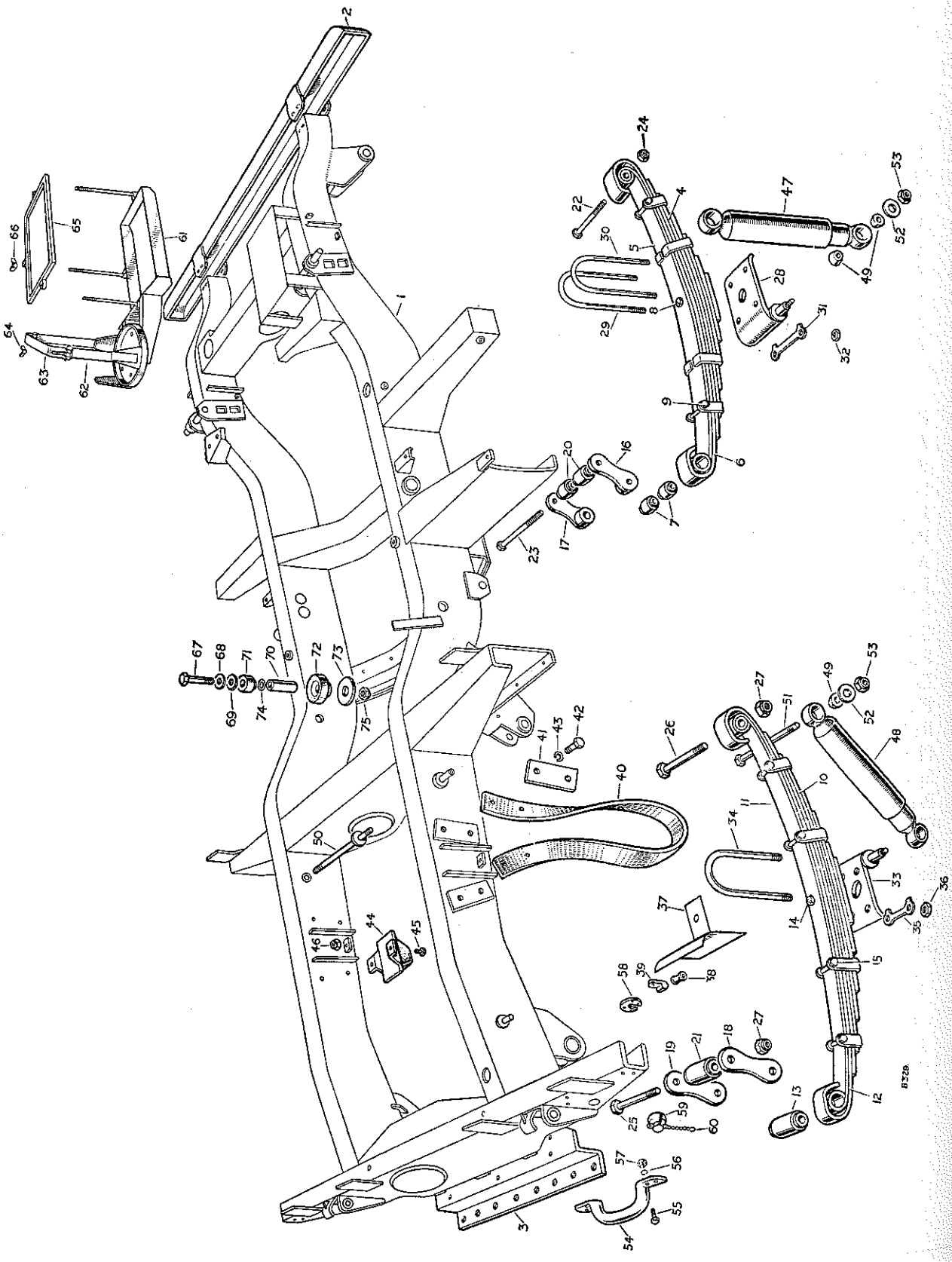

PLATE REF.
1
2
3
4
5
6
7
8
9
10
11
12
13
14
15
16
17
18
19
20
21
22
23

CHASSIS FRAME, ROAD SPRINGS AND SHOCK ABSORBERS

PLATE REF.	1 2 3 4 DESCRIPTION		Qty.	Part No.	REMARKS
1	Chassis frame complete		1	236805	
2	Front bumper		1	270522	
	Bolt (3/8" x 4" long)	Fixing front bumper to chassis frame	4	237194	
	Plain washer		8	3822	
	Self-locking nut (3/8")		4	251322	
3	Rear draw bar		1	232625	
	Set bolt (3/8" x 23/32" long)	Fixing bar to tapped plate	3	215269	
	Locking plate		3	235731	
	Bolt (3/8" x 1" long)	Fixing bar to chassis cross-member	4	250539	
	Plain washer, small		11	2219	
	Plain washer, large		4	3040	
	Locking plate		8	235730	Alternative, check before ordering
	Nut (3/8")		4	2827	
	Shakeproof washer		4	73352	
	Self-locking nut (3/8")		4	251322	
4	Road spring complete, front, 2½" wide		2	233574	
5	Main leaf	For front spring	2	262065	
6	2nd leaf		2	262066	
	3rd leaf		2	262398	
	4th leaf		2	262399	
	5th leaf		2	262400	
	6th leaf		2	262401	
	7th leaf		2	262402	
	8th leaf		2	262403	
	9th leaf		2	262404	
7	Bush for front spring		4	233573	
8	Dowel for front spring		2	240255	
9	Special bolt and nut for spring clip		4	262341	
	Road spring, complete, rear passengers		1	217224	
10	Road spring complete, rear drivers		1	231224	
11	Main leaf	For rear spring	2	261430	
12	2nd leaf		2	261625	
	3rd leaf		2	262405	
	4th leaf		2	262406	
	5th leaf		2	262407	
	6th leaf		2	262408	
	7th leaf		2	262409	
	8th leaf		2	262410	
	9th leaf		2	262411	
13	Bush for rear spring		4	210604	
14	Dowel for rear spring		2	238799	
15	Bolt (1/4" x 2 9/16" long)	For spring clip	8	215072	
	Nut (1/4")		8	2823	
16	Shackle plate, tapped	For front springs	2	233630	
17	Shackle plate, plain		2	233629	
18	Shackle plate, tapped	For rear springs	2	58192	
19	Shackle plate, plain		2	210691	
20	Bush in chassis frame, front spring		4	263354	
21	Bush in chassis frame, rear		2	210604	
22	Shackle pin, front		4	233625	
23	Shackle pin, springs to frame, front		2	270741	

cardiagn.com

CHASSIS FRAME, ROAD SPRINGS AND SHOCK ABSORBERS

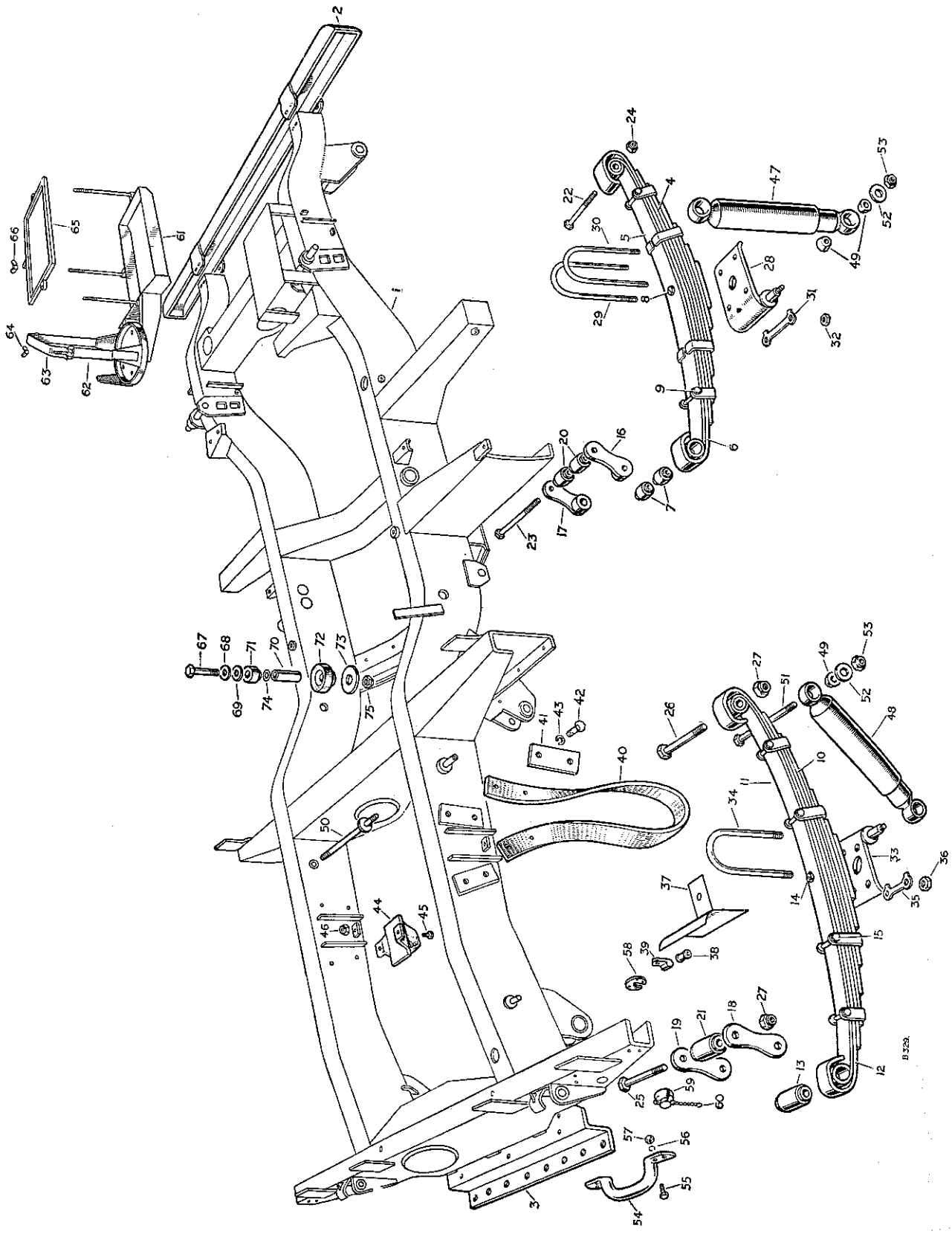

cardiagn.com

CHASSIS FRAME, ROAD SPRINGS AND SHOCK ABSORBERS

PLATE REF.	1 2 3 4 DESCRIPTION	Qty.	Part No.	REMARKS
24	Self-locking nut ($\frac{1}{2}$"), front	6	251324	
25	Shackle pin, rear	4	210699	
26	Shackle pin, springs to frame, rear	2	230721	
27	Self-locking nut ($\frac{1}{2}$), rear	6	50528	
	Bottom plate for front spring, L H	1	233640	
28	Bottom plate for front spring, R.H	1	233642	
29	"U" bolt, long } Fixing front springs to axle	1	217259	
30	"U" bolt, short	1	06694	
	"U" bolt	2	03459	
31	Locker	4	234734	
32	Nut ($\frac{7}{16}$")	8	2096	
	Bottom plate for rear spring L H.	1	217253	
33	Bottom plate for rear spring R H.	1	217254	
34	"U" bolt } Fixing rear springs to axle	4	06694	
35	Locker	4	217261	
36	Nut ($\frac{7}{16}$")	8	2096	
	Shield for brake pipe, L.H.	1	232089	
37	Shield for brake pipe, R.H.	1	232088	
38	Rubber grommet for brake pipe	2	06860	
39	Clip for grommet	2	56666	
	Bolt (2 B A. x $\frac{7}{16}$" long) } Fixing clip to shield	2	243603	
	Spring washer	2	3073	
	Nut (2 B.A.)	2	2247	
40	Check strap for rear axle	2	219573	
41	Plate for check strap	4	219574	
42	Set bolt ($\frac{3}{8}$" x $\frac{29}{32}$" long) } Fixing check strap to chassis frame	8	215270	
43	Spring washer	8	3076	
44	Rubber buffer for axles, front and rear	4	239718	
45	Bolt ($\frac{1}{4}$" x $\frac{5}{8}$" long) } Fixing buffers to chassis frame	8	215053	
46	Self-locking nut ($\frac{1}{4}$")	8	50524	
47	Shock absorber, front	2	241037	
48	Shock absorber, rear	2	241038	
49	Rubber bush for shock absorbers	16	240796	
50	Special pin for L.H. shock absorber and tail pipe	1	231784	
51	Bolt ($\frac{7}{16}$" x 6$\frac{5}{16}$" long) } Fixing shock absorbers	3	215430	
52	Plain washer	8	217245	
53	Self-locking nut ($\frac{7}{16}$")	8	251323	
54	Lifting handle, rear	2	300816	
55	Bolt ($\frac{5}{16}$" x $\frac{11}{16}$" long) } Fixing handles to chassis frame	8	237158	
56	Spring washer	8	3075	
57	Nut ($\frac{5}{16}$")	8	3490	
58	Retainer plate for trailer plug	1	231952	
	Screw (5 B.A.) } Fixing plate and plug to chassis frame	4	3279	
	Nut (5 B.A.)	4	3280	
59	Splashproof cap for trailer plug	1	231772	
60	Retaining chain for cap	1	231995	
	Screw (2 B.A. x $\frac{1}{2}$" long) } Fixing chain to chassis frame	1	77700	
	Plain washer	1	3851	
	Spring washer	1	3073	
	Nut (2 B A)	1	3823	

* Vehicles numbered 26100001 to 36101220. 36130948. 36160743, 36300003. 36330004, 36360002, 36630166 and 36660228

† Vehicles numbered 36101221 36130949, 36160744. 36300004. 36330005 363600003, 36630167 and 36660229 onwards

cardiagn.com

CHASSIS FRAME, ROAD SPRINGS AND SHOCK ABSORBERS

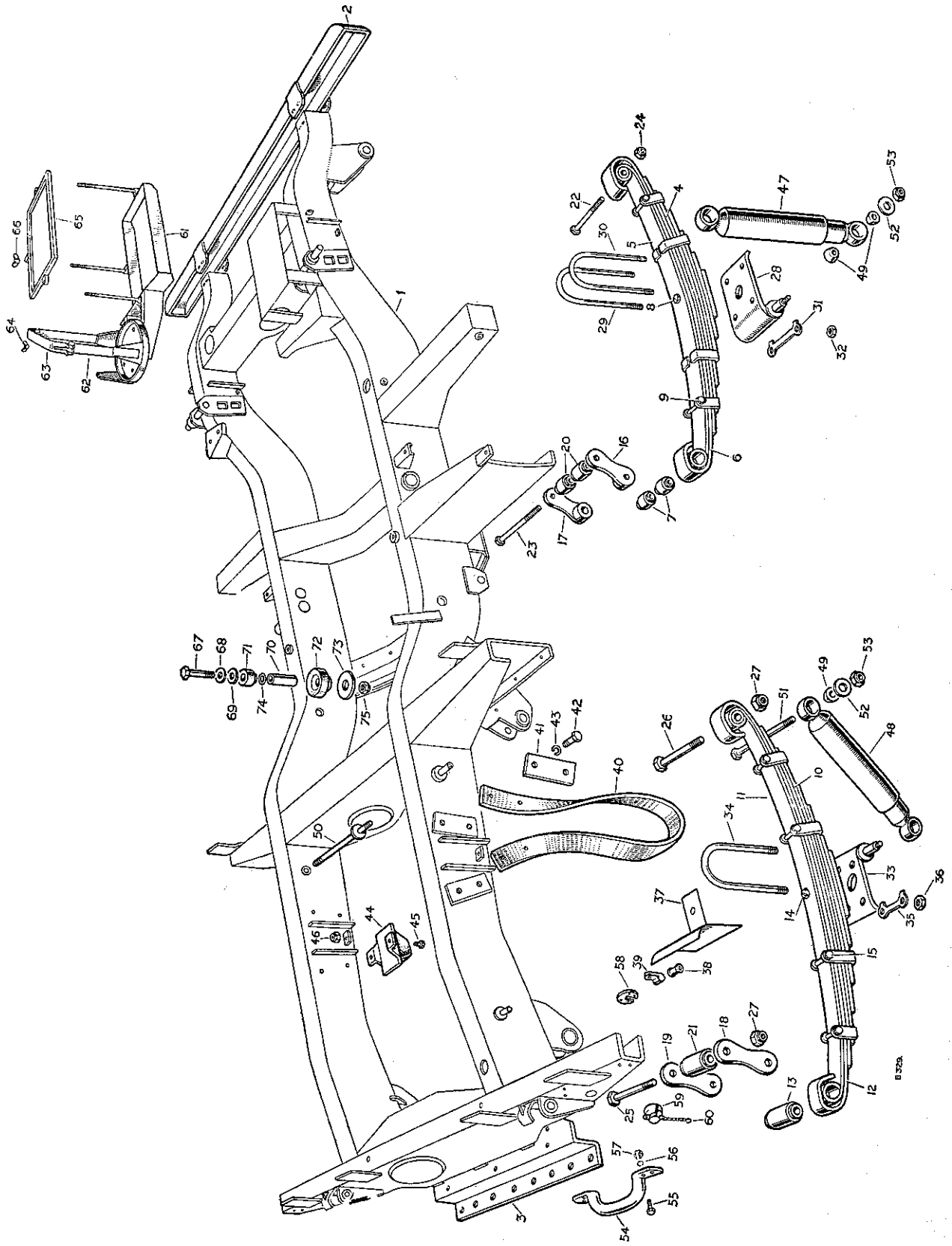

cardiagn.com

CHASSIS FRAME, ROAD SPRINGS AND SHOCK ABSORBERS

PLATE REF.	1 2 3 4 DESCRIPTION		Qty.	Part No.	REMARKS
61	Battery casing and air cleaner support complete		1	232550	
62	Air cleaner clamp, side		1	232539	
63	Air cleaner clamp, top		1	232548	
64	Wing nut for clamp		1	3580	
	Bolt ($\frac{1}{4}$" x $\frac{5}{8}$" long)	Fixing battery casing and support to chassis frame	1	218552	
	Bolt ($\frac{1}{4}$" x $\frac{9}{16}$" long)		3	237139	
	Shakeproof washer		2	78114	
	Spring washer		3	3074	
	Nut ($\frac{1}{4}$")		4	3819	
65	Battery support, top		1	232682	
66	Wing nut fixing battery		3	250431	
	Set bolt ($\frac{7}{16}$" x $2\frac{15}{16}$" long), front	Fixing engine unit to chassis frame at front and rear	2	250564	
	Spring washer, front		2	3077	Alternative, check before ordering
	Locking plate	For front engine mounting bolt	2	240111 R.H.D.	
	Locking plate R.H.		1	240111 L.H.D.	
	Locking plate L.H.		1	240112 L.H.D.	
	Drive screw fixing locking plate		2	72626	
67	Special bolt, rear		2	239656	
68	Plain washer, top		4	04799	
69	Rubber washer		4	50052	
70	Distance tube		4	04802	
71	Top rubber		4	07091	
72	Bottom rubber		4	04788	
73	Plain washer, bottom		4	04801	
74	Shim		As required	04800	
75	Self-locking nut ($\frac{7}{16}$"), rear		2	251323	Alternative, check before ordering
	Special nut, rear		2	240418	
	Split pin		2	2981	
	Road wheel, well base rim type		5	231601	Alternative types Check carefully before ordering
	Road wheel, detachable rim type		5	217267	
	Special bolt and nut, for detachable rim type wheel		8	243471	
	Tyre 6.00" x 16" Dunlop		5	239742	
	Tyre 6.00" x 16" Dunlop "Fort"		5	240377	
	Tyre 7.00" x 16" Dunlop		5	232123	
	Inner tube 6.00" x 16" Dunlop		5	232122	
	Inner tube 7.00" x 16" Dunlop		5	233042	
	Tyre 7.00" x 16" Dunlop Standard		5	236615	Alternative to "Fort"
	Tyre 7.00" x 16" Dunlop "Fort"		5	233041	Supplied as extra equipment for desert conditions
	Inner tube 7.00" x 16" Dunlop "Fort"		5	233042	
	Rim band for detachable rim type wheel		5	232053	
	Balance weight for road wheel	For well base rim type road wheel	As required	263142	
	Bolt ($\frac{1}{4}$" x $\frac{3}{8}$" long) fixing balance weight		As required	77808	
	Nut for road wheel		20	217361	

cardiagn.com

CLUTCH PEDAL AND LINKAGE

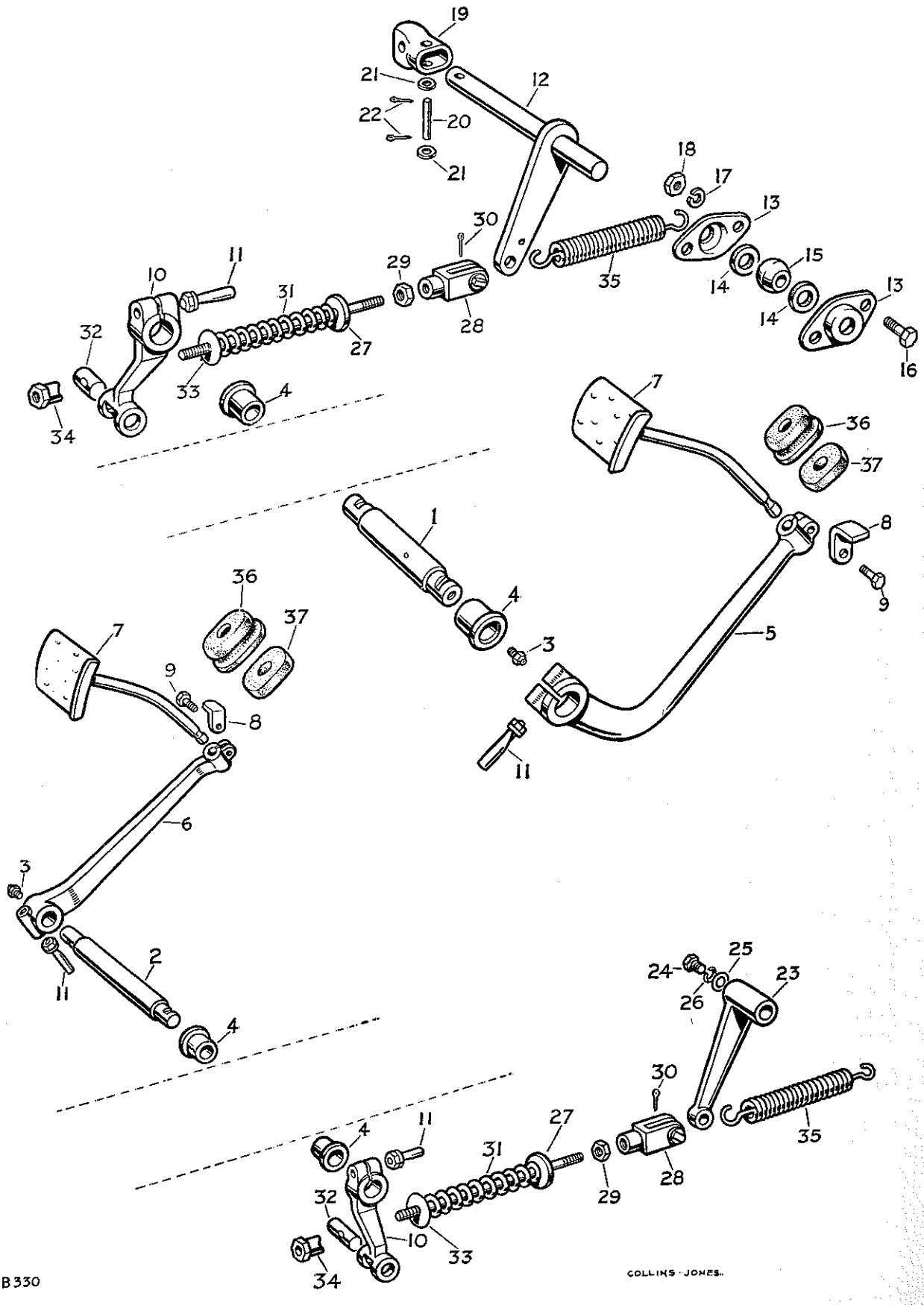

CLUTCH PEDAL AND LINKAGE

PLATE REF.	1 2 3 4	DESCRIPTION	Qty.	Part No.	REMARKS
1		Shaft for clutch pedal	1	217829	R.H.D.
2		Shaft for clutch pedal	1	218025	L.H.D.
3		Grease nipple for shaft	1	218073	
4		Bush for pedal shaft	2	218014	
5		Pedal lever for clutch	1	217817	R.H.D.
6		Pedal lever for clutch	1	218026	L.H.D.
7		Clutch pedal rod and pad	1	218072	
8		Stop for clutch pedal	1	219213	
9		Set bolt ($\frac{5}{16}$" x 1" long) fixing rod and stop to lever	1	237160	
10		Operating lever for clutch	1	217828	
11		Cotter complete fixing levers	2	41508	
12		Cross-shaft and lever for clutch	1	217982	R.H.D.
13		Housing for cross-shaft bearing	2	217983	R.H.D.
14		Felt ring for bearing housing	2	217985	R.H.D.
15		Spherical bearing for cross-shaft	1	217984	R.H.D.
16		Bolt ($\frac{5}{16}$" x $\frac{11}{16}$" long) Fixing	2	237158	R.H.D.
17		Spring washer bearing housing	2	3075	R.H.D.
18		Nut ($\frac{5}{16}$") to chassis frame	2	2828	R.H.D.
19		Connecting tube for clutch cross-shaft	1	217979	R.H.D.
20		Pin Fixing connecting tube	2	240191	R.H.D.
21		Plain washer to cross-shaft and	4	10882	R.H.D.
22		Split pin clutch shaft	4	3359	R.H.D.
23		Operating lever for clutch shaft	1	237037	L.H.D.
24		Set bolt ($\frac{5}{16}$" x 1$\frac{3}{16}$" long) Fixing	1	237237	L.H.D.
25		Plain washer lever to	1	3522	L.H.D.
26		Spring washer clutch shaft	1	3075	L.H.D.
27		Operating rod for clutch	1	217986	
28		Clevis complete Fixing	1	215089	
29		Locknut ($\frac{5}{16}$") rod to	1	2828	
30		Split pin cross-shaft lever	1	2392	
31		Spring	1	2358	
32		Trunnion Fixing rod to	1	217988	
33		Plain washer operating lever	1	2223	
34		Adjusting nut	1	231574	
35		Return spring for clutch	1	218051	
36		Rubber grommet For clutch	1	70620	
37		Felt washer pedal rod	1	70621	

cardiagn.com

ACCELERATOR LEVER AND RODS

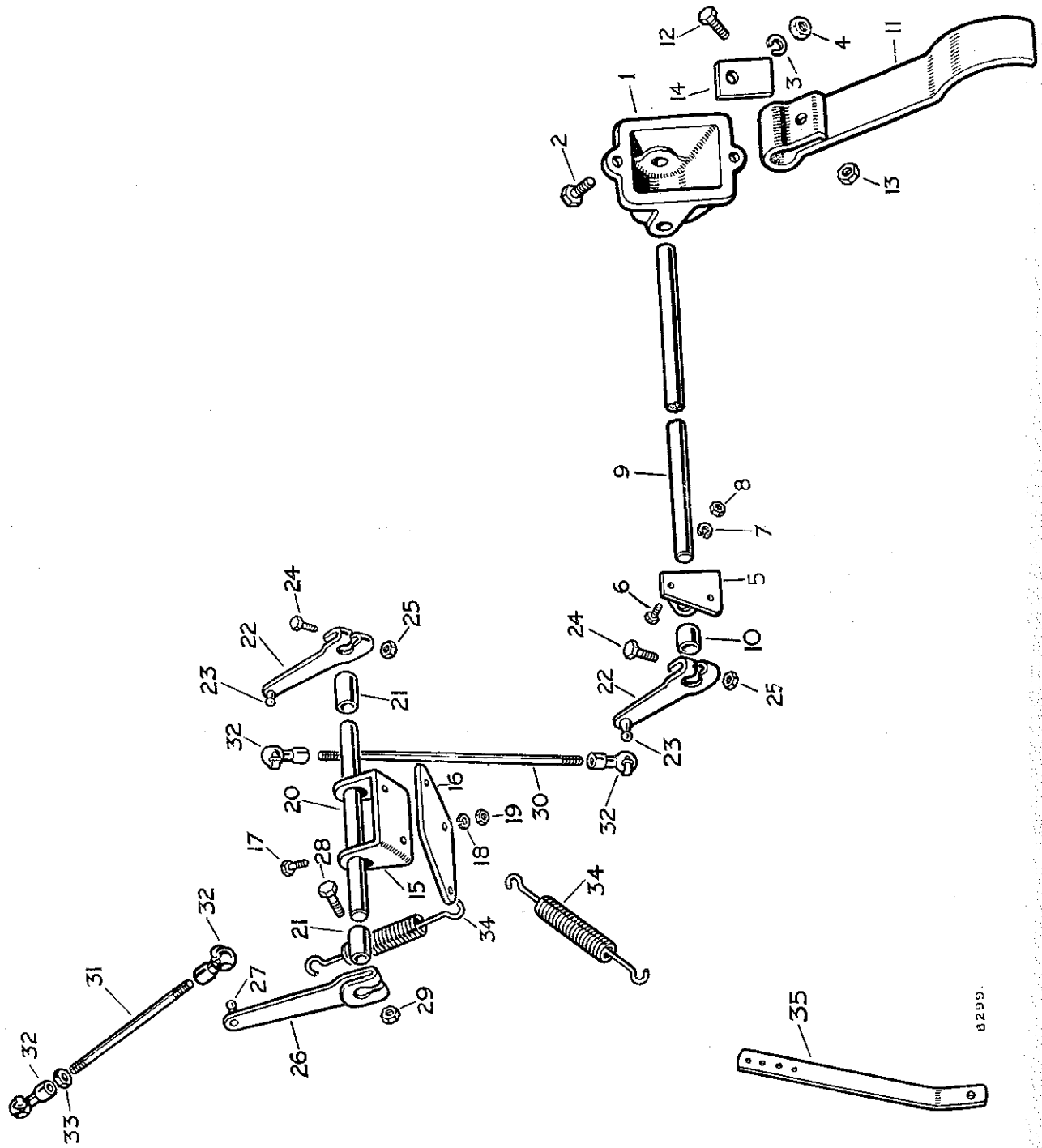

ACCELERATOR LEVER AND RODS

PLATE REF.	1 2 3 4 DESCRIPTION	Qty.	Part No.	REMARKS
1	Housing for accelerator pedal shaft	1	218294	
2	Bolt ($\frac{1}{4}$" x $\frac{5}{8}$" long) } Fixing housing to dash	1	215053	
	Bolt ($\frac{1}{4}$" x $\frac{3}{4}$" long) } Fixing housing to dash	1	215054	
3	Spring washer } Fixing housing to dash	2	3074	
4	Nut ($\frac{1}{4}$") } Fixing housing to dash	2	2823	
5	Bracket for accelerator pedal shaft	1	218372	R.H.D.
6	Bolt ($\frac{1}{4}$" x $\frac{5}{8}$" long) } Fixing bracket to dash	2	215053	R.H.D.
7	Spring washer } Fixing bracket to dash	2	3074	R.H.D.
8	Nut ($\frac{1}{4}$") } Fixing bracket to dash	2	2823	R.H.D.
9	Shaft for accelerator pedal	1	234636	R.H.D.
	Shaft for accelerator pedal	1	234630	L.H.D.
10	Distance piece for pedal shaft	1	234635	
11	Accelerator pedal	1	218398	
12	Bolt ($\frac{5}{16}$" x $\frac{29}{32}$" long) } Fixing pedal to shaft	1	215163	
13	Nut ($\frac{5}{16}$") } Fixing pedal to shaft	1	2828	
14	Stop for accelerator pedal	1	231175	
15	Bracket for accelerator cross-shaft	1	234633	R.H.D.
	Bracket for accelerator cross-shaft	2	218372	L.H.D.
16	Anchor for throttle return spring	1	231557	L.H.D.
17	Bolt ($\frac{1}{4}$" x $\frac{5}{8}$" long) } Fixing bracket and anchor to dash	4	215053	} 2 off on R.H.D.
18	Spring washer } Fixing bracket and anchor to dash	4	3074	} 2 off on R.H.D.
19	Nut ($\frac{1}{4}$") } Fixing bracket and anchor to dash	4	2823	} 2 off on R.H.D.
20	Cross-shaft for accelerator	1	234632	R.H.D.
	Cross-shaft for accelerator	1	234628	L.H.D.
21	Distance piece for cross-shaft	2	230204	R.H.D.
	Distance piece, long } For cross-shaft	1	234634	L.H.D.
	Distance piece, short } For cross-shaft	1	234635	L.H.D.
22	LEVER ASSEMBLY FOR ACCELERATOR	2	218378	
23	Ball end for lever	2	1481	
24	Bolt ($\frac{1}{4}$" x $1\frac{5}{32}$" long) } Fixing levers to shaft	2	237144	
25	Nut ($\frac{1}{4}$") } Fixing levers to shaft	2	2823	
26	LEVER ASSEMBLY FOR CROSS-SHAFT	1	248091	
27	Ball end for lever	1	1481	
28	Bolt ($\frac{1}{4}$" x $1\frac{3}{32}$" long) } Fixing lever to cross-shaft	1	237144	
29	Nut ($\frac{1}{4}$") } Fixing lever to cross-shaft	1	2823	
30	Control rod, accelerator to cross-shaft	1	218392	
31	Control rod, cross-shaft to engine	1	219509	
32	Ball joint socket for rods	4	1659	
33	Locknut for socket	4	2247	
34	Return spring for throttle	2	235649	1 off when Engine Governor is fitted
35	Anchor for spring on flywheel housing	1	231573	

cardiagn.com

EXHAUST SYSTEM

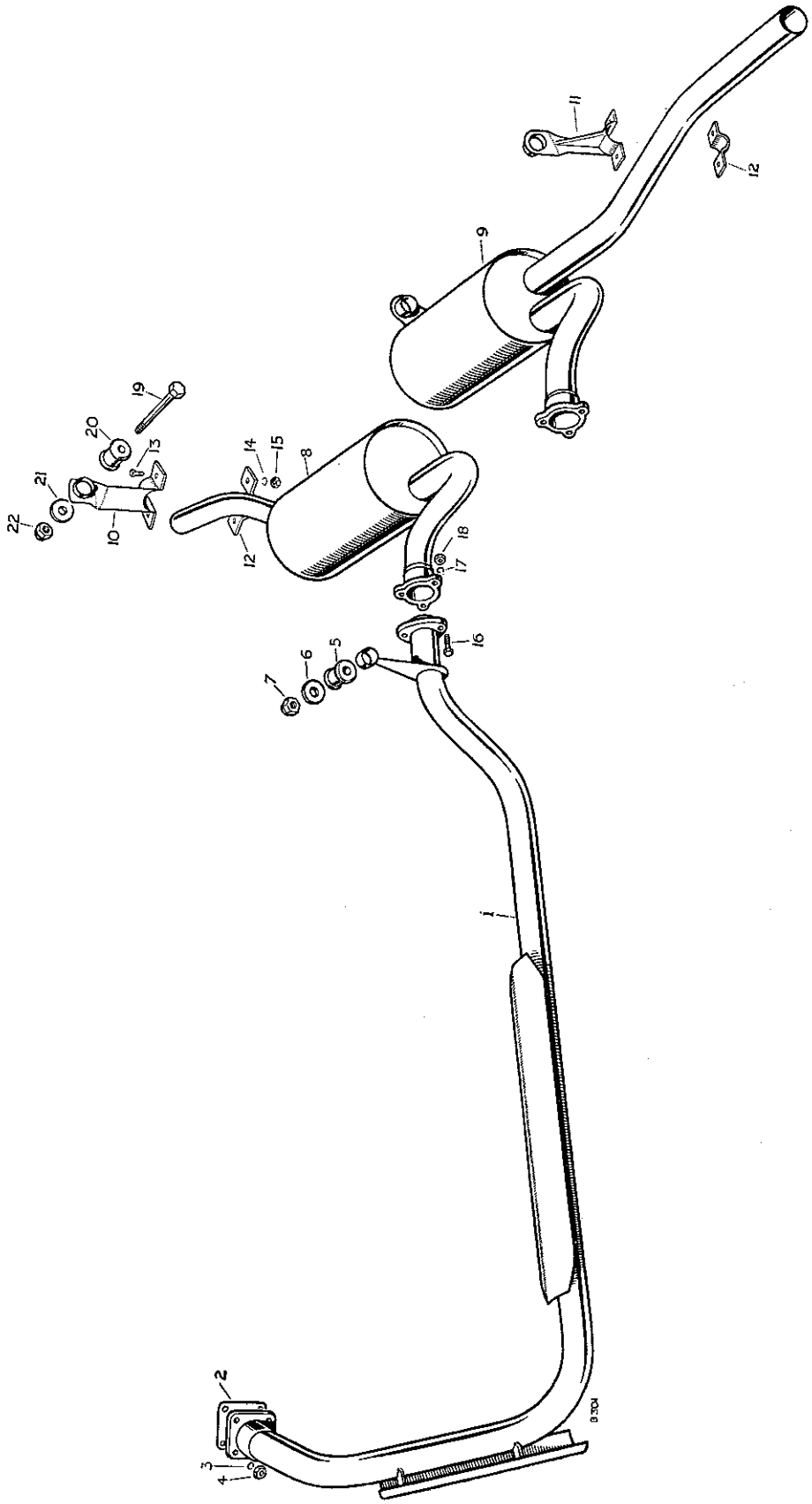

EXHAUST SYSTEM

PLATE REF.	1 2 3 4 DESCRIPTION		Qty.	Part No.	REMARKS
1	Front exhaust pipe complete		1	234668	
2	Joint washer for exhaust pipe		1	213358	
3	Spring washer	Fixing exhaust pipe	4	3075	
4	Nut ($\frac{5}{16}$")	to manifold	4	3771	
5	Rubber bush	Fixing rear end of	1	217608	
6	Plain washer	front exhaust pipe	1	217245	
7	Self-locking nut ($\frac{7}{16}$")	to chassis frame	1	251323	
8	Exhaust silencer complete		1	219198	R.H.D.
9	Exhaust silencer complete		1	234672	L.H.D.
10	Support bracket for tail pipe		1	233618	R.H.D.
11	Support bracket for tail pipe		1	236356	L.H.D.
12	Saddle for support bracket		1	233619	
13	Bolt ($\frac{5}{16}$" x $\frac{13}{16}$" long)	Fixing bracket	2	218566	
14	Spring washer	and saddle	2	3075	
15	Nut ($\frac{5}{16}$")	to tail pipe	2	3490	
16	Bolt ($\frac{5}{16}$" x $1\frac{3}{16}$" long)	Fixing silencer	3	237163	
17	Spring washer	to front	3	3075	
18	Nut ($\frac{5}{16}$")	exhaust pipe	3	3490	
19	Bolt ($\frac{5}{16}$" x $5\frac{5}{16}$" long)		1	215207	R.H.D.
	Bolt ($\frac{5}{16}$" x $5\frac{11}{16}$" long)	Fixing	2	215211	L.H.D.
20	Rubber bush	silencer to	1	217608	2 off on L.H.D.
21	Plain washer	chassis frame	1	3663	2 off on L.H.D.
22	Self-locking nut ($\frac{5}{16}$")		1	251321	2 off on L.H.D.

cardiagn.com

RADIATOR AND FITTINGS

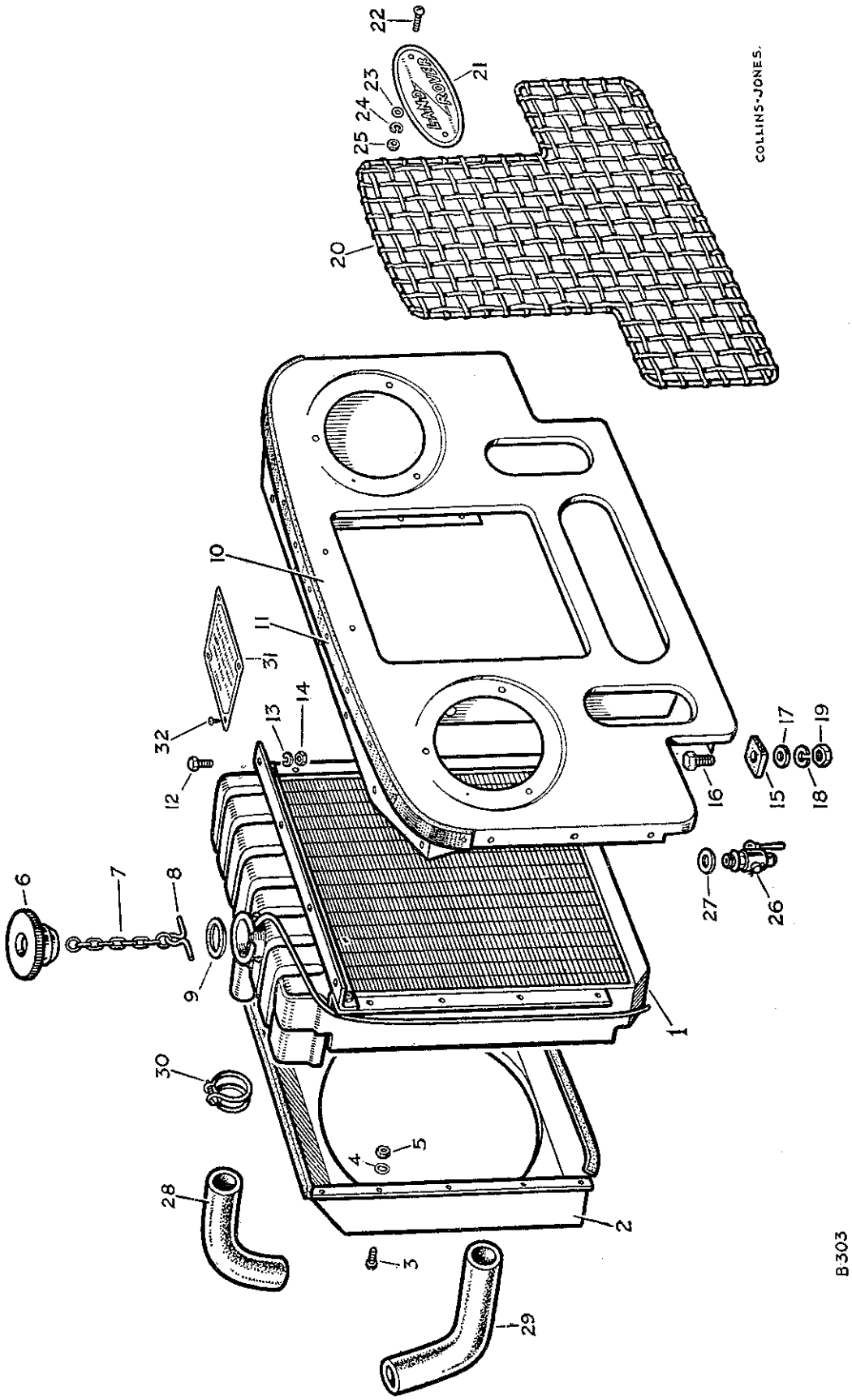

RADIATOR AND FITTINGS

PLATE REF.	1 2 3 4 DESCRIPTION		Qty.	Part No.	REMARKS
1	RADIATOR BLOCK ASSEMBLY		1	219245	
2	Cowl for fan		1	243373	
3	Screw (2 B.A. x $\frac{3}{8}$" long)	Fixing cowl to radiator block	10	73408	
4	Shakeproof washer		10	69402	
5	Nut (2 B.A.)		10	2247	
6	Filler cap for radiator		1	217437	
7	Chain for filler cap		1	230328	
8	Retainer for chain		1	230329	
9	Joint washer for filler cap		1	217438	
10	RADIATOR GRILLE PANEL ASSEMBLY		1	304906	
11	Bonnet rest strip		1	300824	
	Bifurcated rivet fixing strip		12	68087	
12	Bolt ($\frac{1}{4}$" x $\frac{21}{32}$" long)	Fixing radiator block to grille panel	11	218552	
13	Spring washer		11	3074	
14	Nut ($\frac{1}{4}$")		11	3819	
15	Rubber buffer	Fixing grille panel to chassis frame	6	306465	
16	Bolt ($\frac{5}{16}$" x $1\frac{3}{16}$" long)		3	237163	
17	Plain washer		6	2249	
18	Spring washer		3	3075	
19	Nut ($\frac{5}{16}$")		3	3490	
20	Grille for radiator		1	302567	
21	"Land-Rover" nameplate, $7\frac{3}{16}$" overall		1	302361	
22	Screw (2 B.A. x 1" long)	Fixing grille and nameplate to grille panel	2	78120	
23	Plain washer		2	2260	
24	Spring washer		2	3073	
25	Nut (2 B.A.)		2	2247	
26	Drain tap for radiator		1	243237	
27	Joint washer for drain tap		1	2347	
28	Hose for radiator, top		1	217273	
29	Hose for radiator, bottom		1	217274	
30	Clip for radiator hoses		4	50315	
31	Oil recommendation plate		1	235634	
32	Drive screw fixing plate		4	78001	

cardiagn.com

FUEL SYSTEM

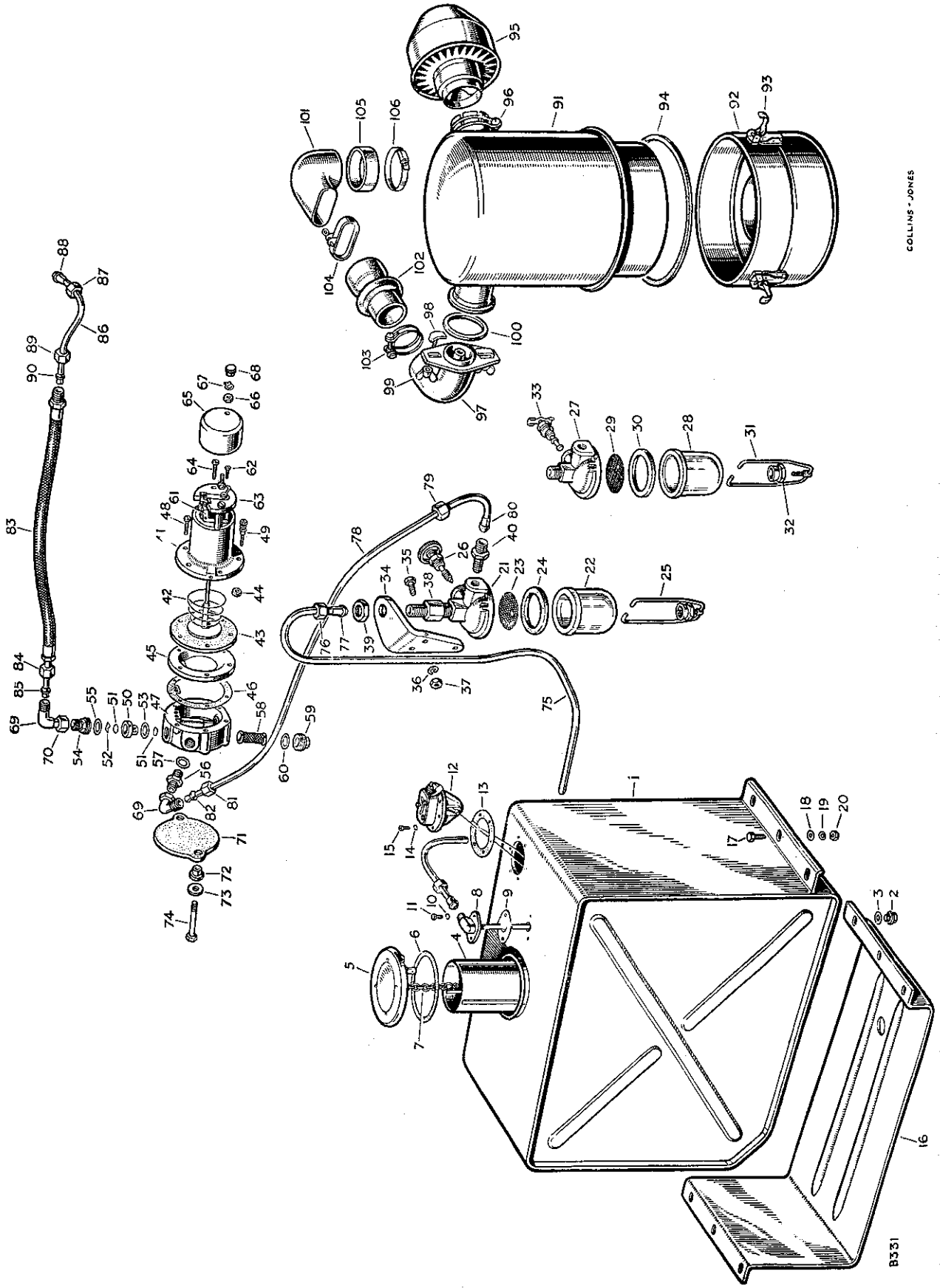

cardiagn.com

FUEL SYSTEM

PLATE REF.	1 2 3 4 DESCRIPTION	Qty.	Part No.	REMARKS
1	Petrol tank complete	1	218020	
2	Drain plug for petrol tank	1	2885	
3	Joint washer for drain plug	1	2862	
4	Telescopic filler tube	1	231188	
5	Filler cap	1	231189	
6	Joint washer for cap	1	261509	
7	Chain for filler cap	1	231190	
8	Outlet elbow complete for tank	1	218024	
9	Joint washer for outlet elbow	1	267837	
10	Spring washer } Fixing elbow	2	3101	
11	Screw (3 B.A. x ½″ long) } to tank	2	3100	
12	Gauge unit for petrol tank	1	218021	
13	Joint washer for gauge unit	1	56398	
14	Spring washer } Fixing gauge	6	3101	
15	Screw (3 B.A. x ½″ long) } unit to tank	6	3100	
16	Undershield for petrol tank	1	230359	
17	Bolt (5/16″ x 29/32″ long) } Fixing	6	215163	
18	Plain washer } petrol tank	6	2249	
19	Spring washer } and undershield	6	3075	
20	Nut (5/16″) } to chassis frame	6	2828	
21	Petrol sediment bowl complete	1	218496	
22	Bowl only	1	236891	
23	Gauze for bowl	1	216418	Alternative to the 7 lines below.
24	Joint washer for bowl	1	261417	Check carefully before ordering
25	Retainer for bowl	1	261419	
26	Tap and gland complete	1	261415	
27	Petrol sediment bowl complete	1	235682	
	Body only	1	262278	
28	Bowl only	1	236896	
29	Gauze for bowl	1	236894	Alternative to the 6 lines above.
30	Joint washer for bowl	1	236895	Check carefully before ordering
31	Retainer for bowl	1	240234	
32	Screw cap for retainer	1	240235	
33	Tap and gland complete	1	240236	
	Petrol sediment bowl complete	1	274323	
	Body only	1	241222	
	Bowl only	1	236891	
	Gauze for bowl	1	241223	Alternative to 218496, 235682 and their component parts
	Joint washer for bowl	1	241225	
	Retainer for bowl	1	261419	
	Tap and gland	1	241224	
	Special screw for tap	1	241226	
34	Bracket for sediment bowl	1	218468	
35	Bolt (¼″ x ⅝″ long) }	3	215053	
36	Spring washer } Fixing bracket to dash	3	3074	
37	Nut (¼″) }	3	2823	
38	Inlet adaptor for sediment bowl	1	218471	
39	Special nut fixing adaptor and bowl to bracket	1	218470	
40	Outlet union for sediment bowl	1	218469	
	Petrol pump complete	1	268374	
41	Coil complete	1	262286	
42	Spring for armature	1	262304	
43	Diaphgram complete	1	260550	
44	Roller for diaphragm	11	260583	

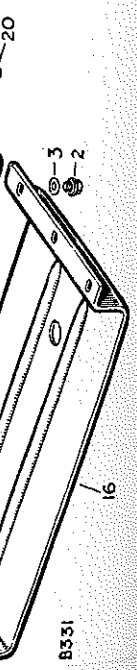

cardiagn.com

FUEL SYSTEM

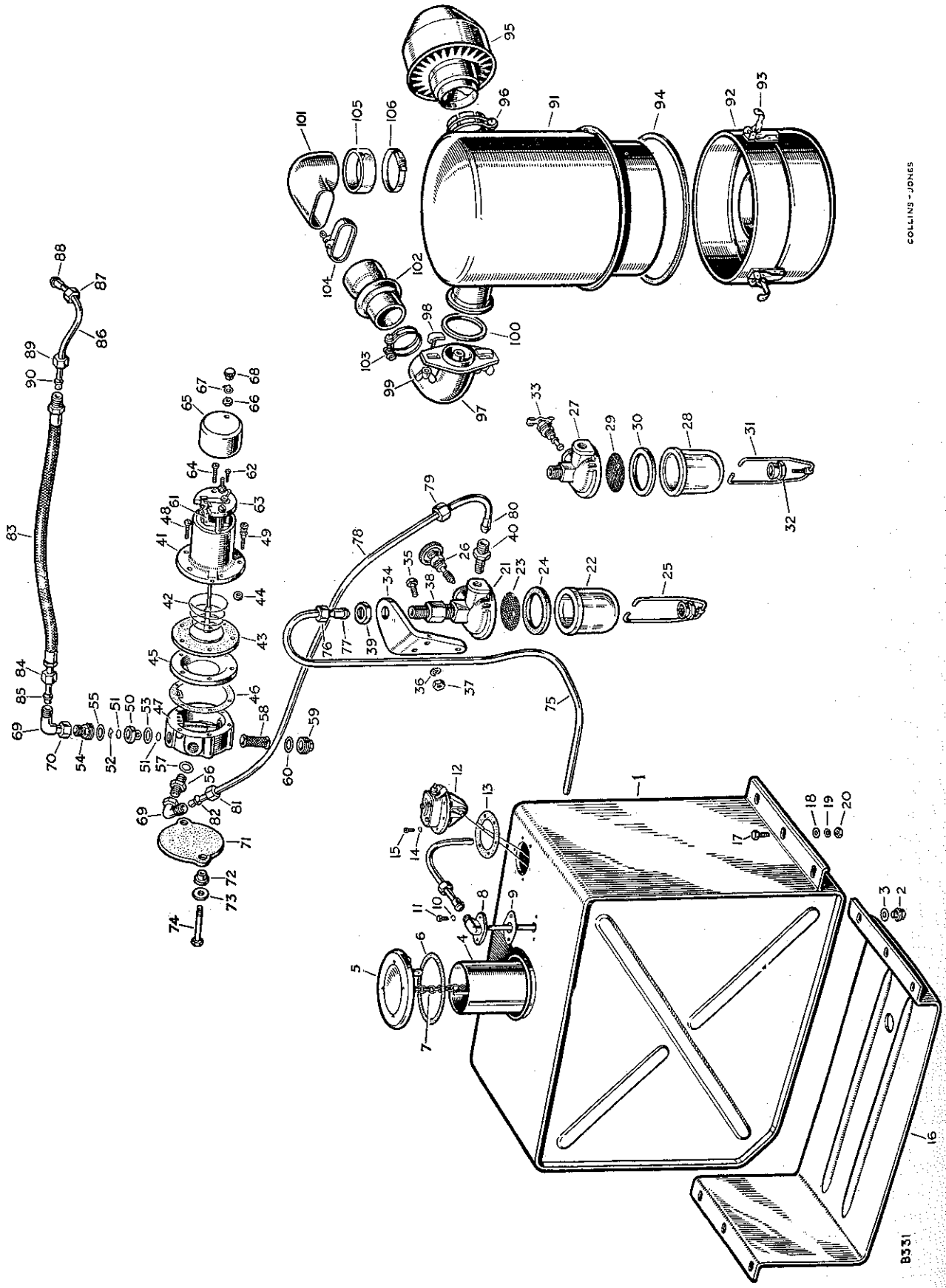

PLATE REF.
45
46
47
48
49
50
51
52
53
54
55
56
57
58
59
60
61
62
63
64
65
66
67
68
69
70
71
72
73
74
75
76
77
78
79
80
81
82
83
84
85
86
88
87
89
90

FUEL SYSTEM

PLATE REF.	1 2 3 4 DESCRIPTION	Qty.	Part No.	REMARKS
45	Plate body	1	262299	
46	Joint washer for plate body	1	262300	
47	Body	1	262287	
48	Screw fixing coil housing to body	5	262301	
49	Special screw for earth terminal	1	262302	
	Special spring washer } For earth	1	262303	
	Special nut } terminal screw	1	262309	
50	Valve cage	1	262288	
51	Disc for valve	2	262297	
52	Spring clip retaining valve disc	1	262289	
53	Washer for valve cage	1	262290	
54	Outlet union	1	262294	
55	Washer for outlet union	1	262293	
56	Inlet union	1	262296	
57	Washer for inlet union	1	262298	
58	Filter	1	262292	
59	Plug for filter	1	262295	
60	Washer for filter plug	1	262293	
61	Contact set complete	1	268674	
62	Special screw for contact blade	1	262310	
63	Moulding for end plate	1	260585	
64	Screw fixing moulding	2	262308	
	Terminal screw	1	262307	
	Special nut for terminal screw	1	262306	
65	Cover for end plate	1	234309	
66	Terminal nut	1	262306	
67	Tag for terminal	1	262305	
68	Knurled nut	1	262311	Alternative, check before ordering
	Spring washer	1	3073	
	Nut (2 B.A.)	1	3926	
69	Elbow for pump	2	50499	
	Olive } Fixing elbow	2	3136	
70	Nut } to pump	2	50421	
71	Mounting plate }	1	212557	
72	Rubber bush } Fixing electric	2	212558	
73	Plain washer } petrol pump	2	2228	
74	Special set bolt }	2	212556	
75	Petrol pipe complete, tank to bowl	1	231277	
76	Nut } Fixing pipe to	2	2729	
77	Nipple } tank and bowl	2	2728	
78	Petrol pipe complete, bowl to pump	1	230240	
79	Nut }	1	2729	
80	Nipple } Fixing pipe to	1	2728	
81	Nut } bowl and pump	1	50421	
82	Olive }	1	3136	
83	Flexible petrol pipe complete	1	275376	
84	Nut } Fixing pipe	1	50421	
85	Olive } to pump	1	3136	
86	Petrol pipe complete, flex to carburettor	1	218955	
88	Nipple }	1	2728	
87	Nut } Fixing pipe to flex	1	2729	
89	Nut } and carburettor	1	50421	
90	Olive }	1	3136	

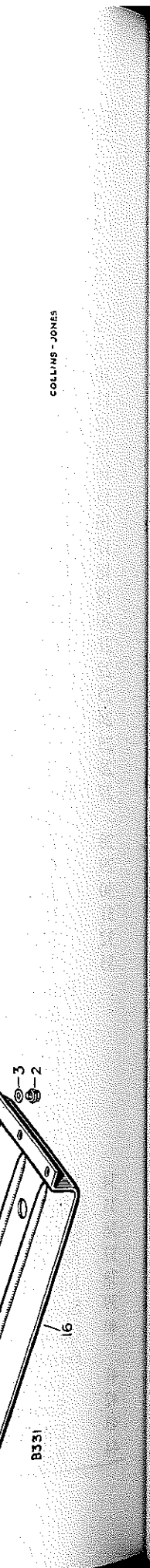

cardiagn.com

FUEL SYSTEM

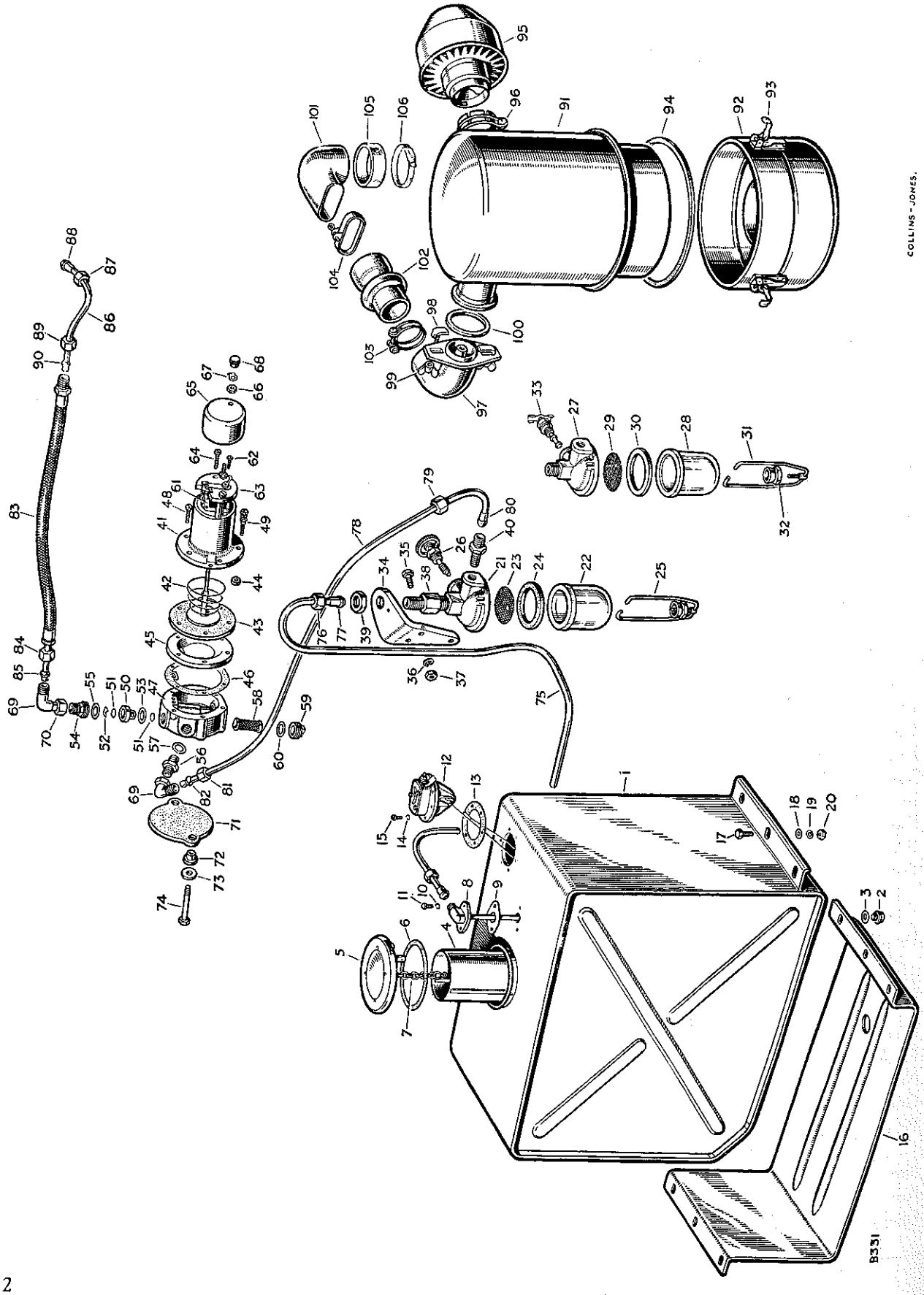

cardiagn.com

FUEL SYSTEM

PLATE REF.	1 2 3 4 DESCRIPTION	Qty.	Part No.	REMARKS
	Oil bath air cleaner complete	1	217397	
91	Filter and case	1	261412	
92	Oil container	1	261413	
93	Toggle clip for oil container	3	262068	
94	Cork washer for oil container	1	261414	
95	Centrifugal air cleaner	1	217396	
96	Clip fixing cleaners together	1	232992	
97	Connecting tube	1	236528	
98	Clamp for connecting tube	2	231517	
99	Wing nut for clamp	2	3580	
100	Rubber sealing ring for connecting tube	1	217578	
	Elbow for air cleaner, to carburettor	1	231494	Vehicles numbered 26100001 to 26100200
	Restrictor for air cleaner elbow	1	232635	
101	Elbow, air cleaner to carburettor	1	236527	Vehicles numbered 26100201 onwards
102	Rubber connection, elbow to connecting tube	1	217575	
103	Clip fixing rubber connection to tube	1	50323	
104	Clip fixing rubber connection to elbow	1	232451	
105	Air seal for elbow	1	231594	
106	Clip fixing elbow to carburettor	2	232992	
	Rubber connection, tube to rocker cover	1	232651	Vehicles numbered 26100001 to 26100200
	Rubber connection, elbow to crankcase breather	1	217577	
	Clip for rubber connections	4	50303	

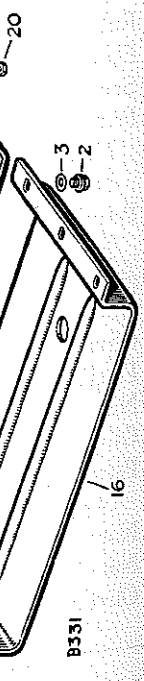

COLLINS-JONES.

cardiagn.com

INSTRUMENTS

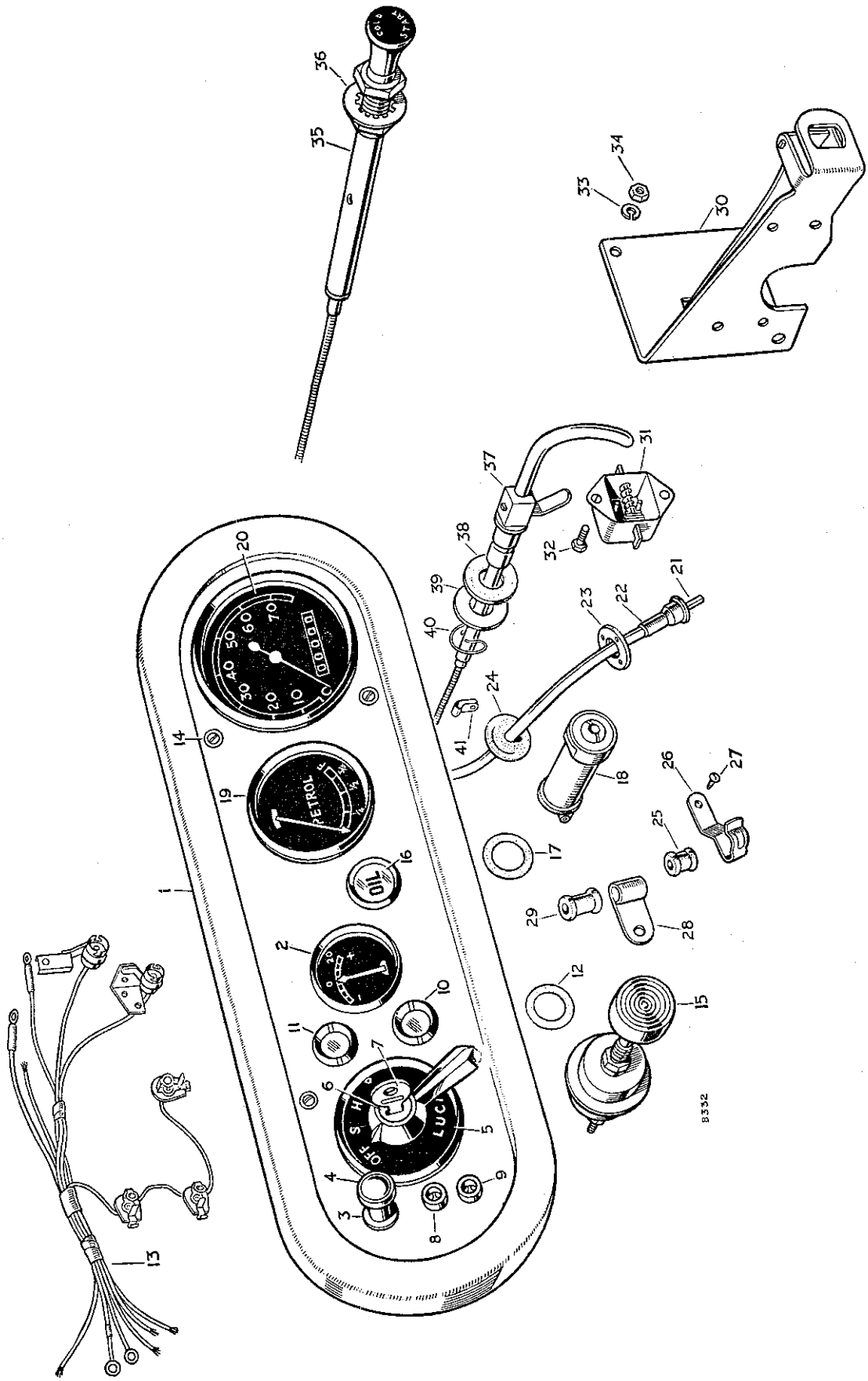

INSTRUMENTS

PLATE REF.	1 2 3 4 DESCRIPTION	Qty.	Part No.	REMARKS
	INSTRUMENT PANEL ASSEMBLY	1	218579	
1	Instrument panel only	1	238027	
	Instrument panel only	1	238028	America Dollar area
2	Ammeter	1	234563	
3	Switch for panel lights	1	217764	
4	Knob for panel light switch	1	261969	
5	Switch for lamps and ignition	1	217589	
6	Barrel lock for ignition	1	59895	
7	Key for lock	1	29979	State key number when ordering
8	Socket for inspection lamp, black	1	273935	
9	Socket for inspection lamp, red	1	219654	*
10	Warning light, ignition	1	234995	*
	Warning light, ignition	1	238018	†
	Bezel and glass, Red	1	262922	†
11	Warning light, mixture	1	234996	*
	Warning light, mixture	1	238020	†
	Bezel and glass, Amber	1	262924	†
	Bulb for warning light	2	232590	
12	Washer for warning light	2	235556	
13	Panel harness	1	234922	*
	Panel harness	1	238029	†
	Connecting lead for warning lights	2	238031	†
	Bulb for panel light	2	10211	
14	Set screw (2 B.A. x ½" long) } Fixing	4	77700	
	Plain washer } instrument	4	3816	
	Spring washer } panel	4	3073	
15	Starter switch	1	237540	
16	Warning light, oil	1	234997	*
	Warning light, oil	1	238019	†
	Bezel and glass, Green	1	262923	†
	Bulb for warning light	1	232590	
17	Washer for warning light	1	235556	
18	Warning light for headlamp beam	1	234401	America Dollar area
19	Petrol level gauge	1	217630	
20	Speedometer, miles	1	231911	
	Speedometer, kilometres	1	231910	
	Cable complete for speedometer	1	232570	
21	Cable, inner	1	234536	
22	Cable, outer	1	234537	
23	Retaining plate for cable	1	232566	
	Spring washer } Fixing	3	3073	
	Set bolt } retaining plate	3	3610	
24	Rubber grommet, in dash } For speedometer	1	71734	
25	Rubber grommet, on cable } cable	2	06860	
26	Clip for cable grommet	1	3618	
27	Drive screw fixing clip	1	72626	
28	Clip } Fixing	1	56667	R.H.D.
	Drive screw } speedometer	1	72627	R.H.D.
29	Rubber grommet } cable	1	06860	R.H.D.
30	Bracket for mixture control	1	216830	

* Vehicles numbered 26100001 to 26105066, 26133550, 26162759, 26300006, 26330011, 26360004, 26630631 and 26660966

† Vehicles numbered 26105067 26133551, 26162760, 26300007, 26330012, 26360005, 26630632 and 26660967 onwards

cardiagn.com

INSTRUMENTS

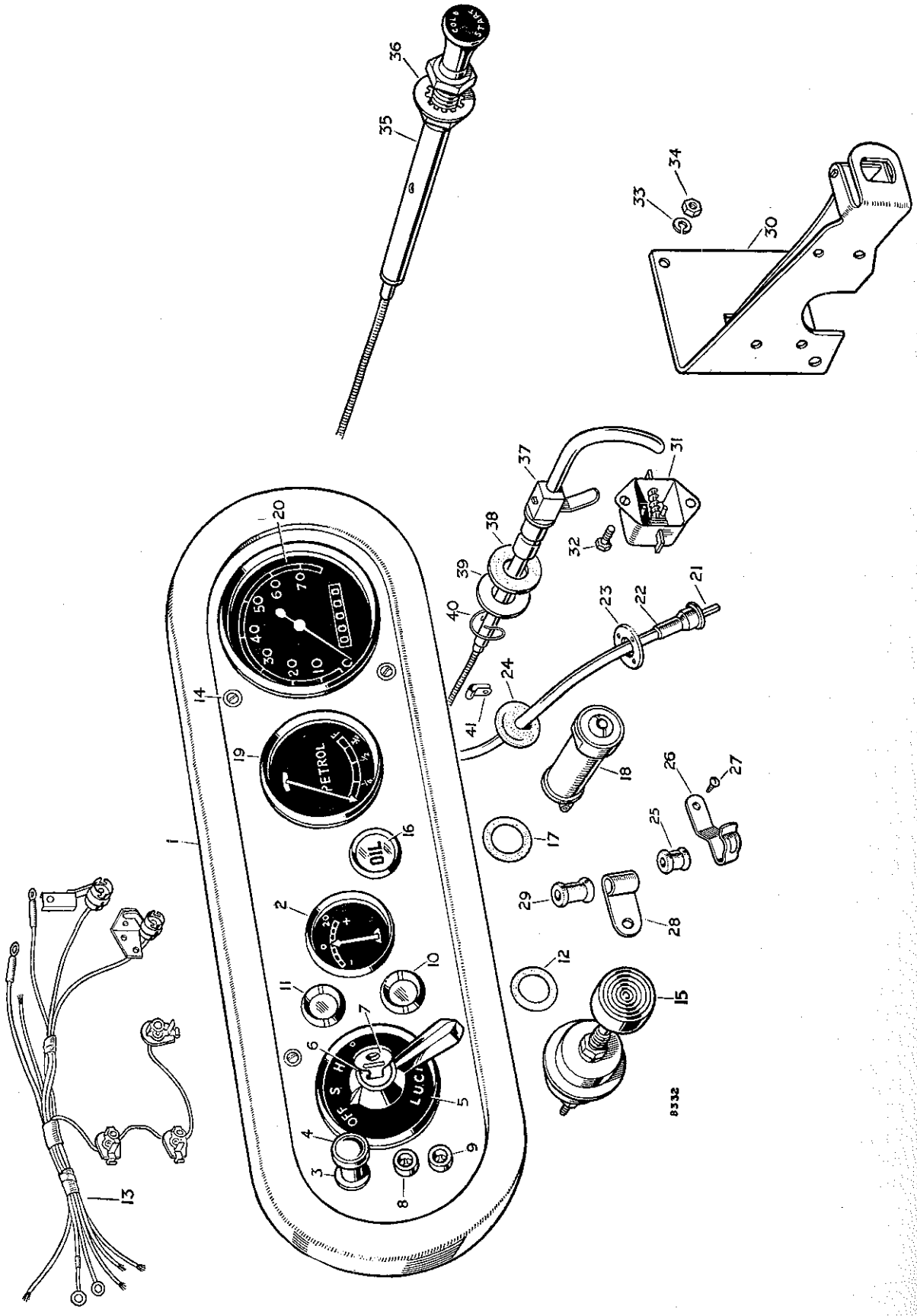

PLAT REF.
31
32
33
34
35
36
37
38
39
40
41

cardiagn.com

INSTRUMENTS

PLATE REF.	1 2 3 4 DESCRIPTION	Qty.	Part No.	REMARKS
31	Switch for mixture warning light	1	214223	
32	Bolt (2 B.A. x $\frac{7}{16}''$ long) } Fixing	2	234603	
33	Spring washer } switch to	2	3073	
34	Nut (2 B.A.) } bracket	2	2247	
35	Mixture control complete	1	233638	
36	Shakeproof washer for control	1	233017	
37	Hand throttle control complete	1	239016	
38	Cork washer for hand throttle	1	232095	
39	Plain washer } Fixing hand throttle	1	232096	
40	Circlip } to dash	1	232097	
41	Cable clip for control cable	1	219501	
	Screw (2 B.A x $\frac{1}{2}''$ long) } Fixing hand	1	71164	
	Spring washer } throttle control	1	3073	
	Nut (2 B.A.) } cable to bracket	1	2247	

cardiagn.com

HEAD, SIDE AND TAIL LAMPS

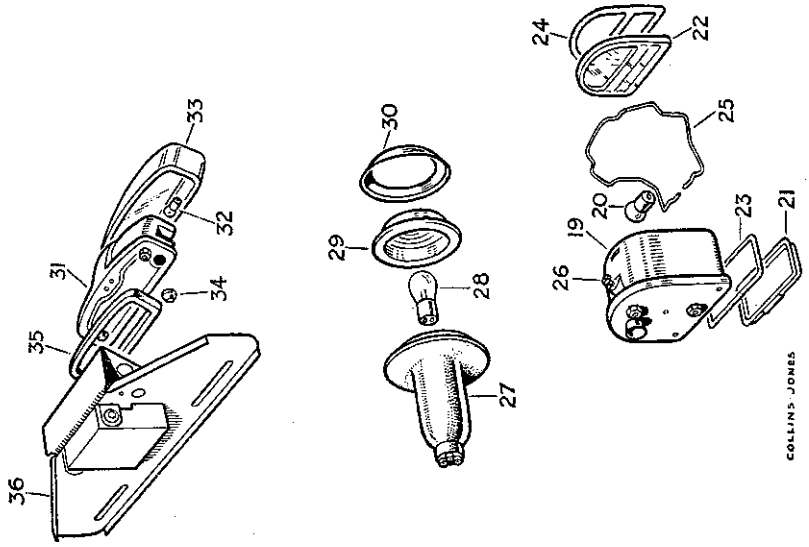

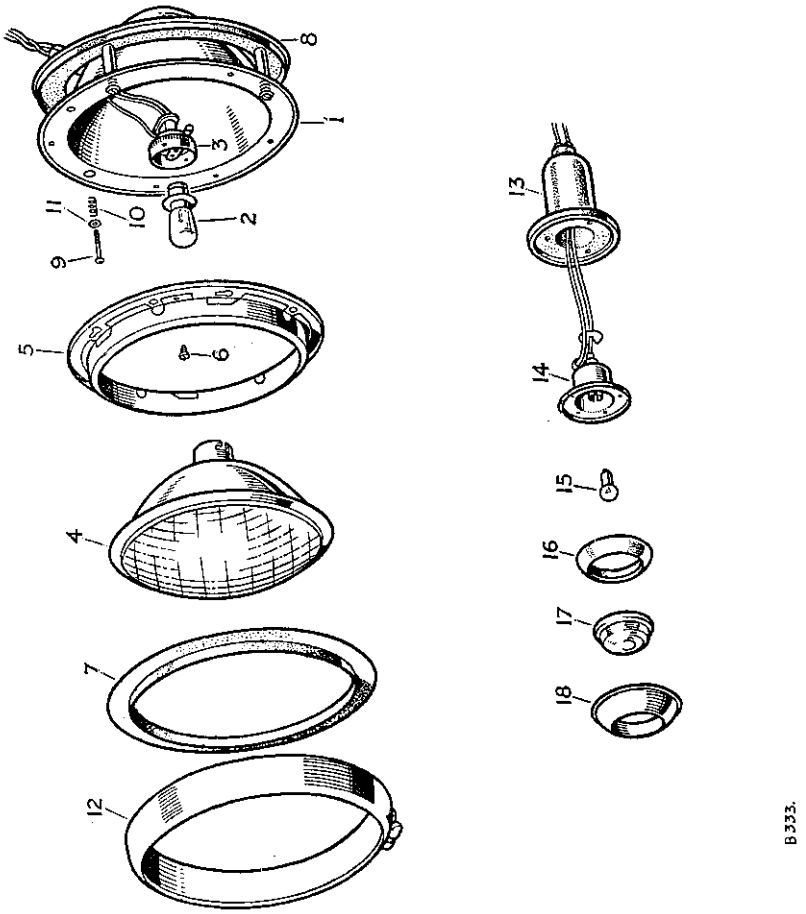

HEAD, SIDE AND TAIL LAMPS

PLATE REF.	1 2 3 4 DESCRIPTION	Qty.	Part No.	REMARKS
	Headlamp complete	2	235663	R.H.D
	Headlamp complete	2	235664	L.H.D. Except Europe
	Headlamp complete	2	235665	L.H.D. Europe except France
	Headlamp complete	2	235666	France only
	Headlamp shell and connector	2	234365	America Dollar area
1	Body for headlamp	2	261995	
2	Bulb for headlamp	2	235232	R.H.D.
	Bulb for headlamp	2	232852	L.H.D Except Europe
	Bulb for headlamp	2	244128	L.H.D Europe except France
3	Adaptor for bulb, double contact	2	261792	
	Adaptor for bulb, triple contact	2	261794	France only
4	Light unit } "Block-pattern" lens	2	262268	R.H.D.
	Light unit } "Block-pattern" lens	2	262342	L.H.D. Except Europe
	Light unit } "Block-pattern" lens	2	262343	L.H.D. Europe except France
	Light unit, triple contact } "Block-pattern" lens	2	262269	France only
5	Rim complete for light unit	2	261791	
6	Special screw for light unit rim	6	262100	
7	Rubber gasket for headlamp rim	2	262101	
8	Gasket for body	2	261793	
9	Special screw } Light unit adjustment	6	261940	
10	Spring for screw } Light unit adjustment	6	261941	
11	Cup washer for screw } Light unit adjustment	6	261943	
12	Rim for headlamp, chromium plated	2	262051	Alternative.
	Rim for headlamp, vehicle colour	2	237896	Check before ordering
	Side lamp complete	2	236102	
13	Body	2	262635	
14	Bulb interior	2	244700	
15	Bulb for side lamp	2	242491	
18	Rim complete	2	262631	
16	Gasket for body	2	262632	
17	Glass	2	237041	
	Screw (4 B.A. x ⅜" long) } Fixing side lamp to front wing	6	75804	
	Spring washer } Fixing side lamp to front wing	6	3072	
	Nut (4 B.A.) } Fixing side lamp to front wing	6	75805	
19	Stop tail lamp complete	2	217618	
20	Bulb (12v. 6w.) for stop tail lamp	4	10211	
21	Glass for number plate illumination, white	2	261500	
22	Glass for stop and tail lights, red	2	260039	
23	Gasket for number plate illumination glass	2	260059	
24	Gasket for stop tail glass	2	260682	
25	Spring retaining glasses	2	261499	
26	Screw fixing body	2	261501	

cardiagn.com

HEAD, SIDE AND TAIL LAMPS

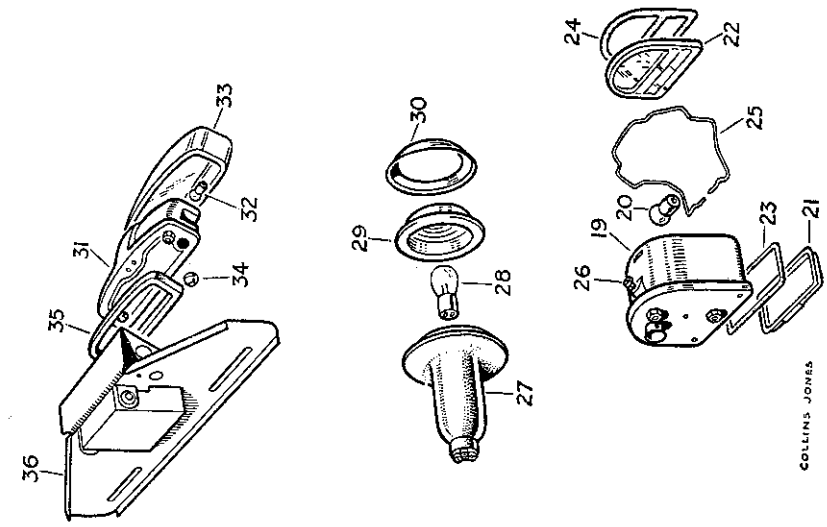

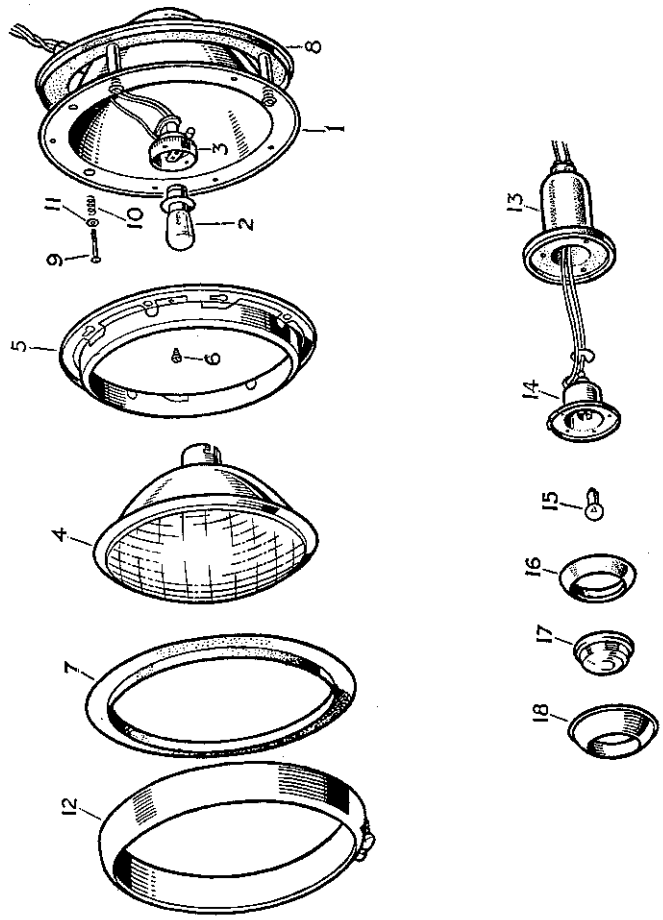

HEAD, SIDE AND TAIL LAMPS

PLATE REF.	1 2 3 4 DESCRIPTION		Qty.	Part No.	REMARKS
	Stop tail lamp		2	234212	
27	Rubber body		2	261638	
28	Bulb for stop tail lamp		2	233310	
29	Glass		2	261641	
30	Rim for glass		2	261640	
	Screw (4 B.A. x ⅜" long)	Fixing tail lamp to body	6	75804	
	Spring washer		6	3072	
	Nut (4 B.A.)		6	75805	America. Dollar area
31	Number plate lamp		1	234213	
32	Bulb for number plate lamp		1	242491	
33	Glass		1	261919	
34	Rubber grommet for wire		1	261252	
35	Rubber gasket for lamp		1	261253	
36	Support for lamp		1	302298	
	Screw (2 B.A. x ⅜" long)	Fixing support to tailboard	2	77846	
	Spring washer		2	3073	
	Nut (2 B.A.)		2	2247	

cardiagn.com

GENERAL ELECTRICAL EQUIPMENT

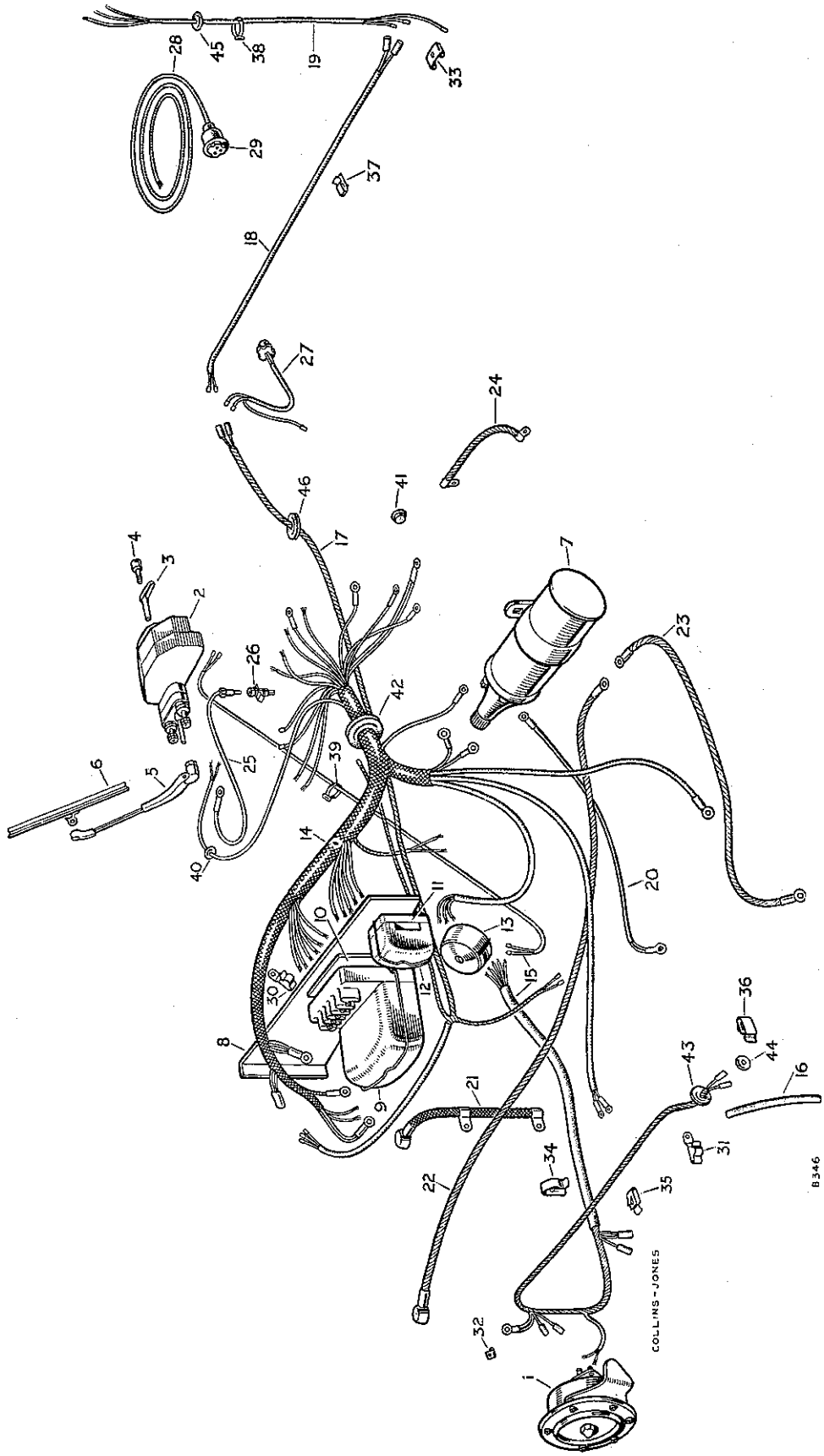

GENERAL ELECTRICAL EQUIPMENT

PLATE REF. 1 2 3 4	DESCRIPTION	Qty.	Part No.	REMARKS
1	Electric horn, Offset adjustment	1	237435	Alternative, check before ordering
	Electric horn, Central adjustment	1	241814	
	Contact set for horn	1	262636	
	Bolt ($\frac{3}{8}$" x $\frac{29}{32}$" long) — Fixing electric horn	1	237178	
	Spring washer — Fixing electric horn	1	3076	
	Nut ($\frac{3}{8}$") — Fixing electric horn	1	3485	
2	Windscreen wiper motor complete	1	231553	
3	Chrome starter arm for wiper motor	1	261836	
4	Special screw fixing arm	1	261837	
5	Arm for wiper blade	1	261503	
6	Wiper blade	1	261504	
	Drive screw earthing wiper motor	1	72626	
	Battery, dry	1	270167	
7	Ignition coil	1	263732	
	Cable nut for coil	1	240102	
	Drive screw fixing coil	2	72628	
8	Mounting plate for control box	1	232674	
	Bolt ($\frac{1}{4}$" x $\frac{5}{8}$" long) — Fixing mounting plate to dash	3	215053	
	Spring washer — Fixing mounting plate to dash	3	3074	
	Nut ($\frac{1}{4}$") — Fixing mounting plate to dash	3	2823	
9	Voltage control box	1	235553	
	Cover for control box	1	262859	
10	Insulation plate for voltage control box	1	237243	
	Screw (2 B.A. x $1\frac{1}{8}$" long) — Fixing voltage control box	2	76653	
	Spring washer — Fixing voltage control box	2	3073	
	Nut (2 B.A.) — Fixing voltage control box	2	2247	
11	Fuse box	1	219078	
12	Cover for fuse box	1	261502	
	Fuse 25 amp.	1	40167	
	Special screw — Fixing fuse box	2	3279	
	Special nut — Fixing fuse box	2	3280	
13	Junction box	1	03971	
	Screw (2 B.A. x $\frac{1}{2}$" long) — Fixing junction box	2	71164	
	Spring washer — Fixing junction box	2	3073	
	Nut (2 B.A.) — Fixing junction box	2	2247	
14	Dash harness	1	238032	
15	Headlamp, sidelamp and horn harness	1	236042	R.H.D.
	Headlamp, sidelamp and horn harness	1	236043	L.H.D.
16	Sheath for sidelamp lead	2	233463	
17	Frame harness	1	236136	
18	Rear cross-member harness	1	236137	
19	Stop tail leads	2	236139	
	Stop tail leads	2	243507	America Dollar area
	Extension lead for stop light switch	1	236141	L.H.D.
	Cable for main beam warning light	1	236421	America Dollar area

cardiagn.com

GENERAL ELECTRICAL EQUIPMENT

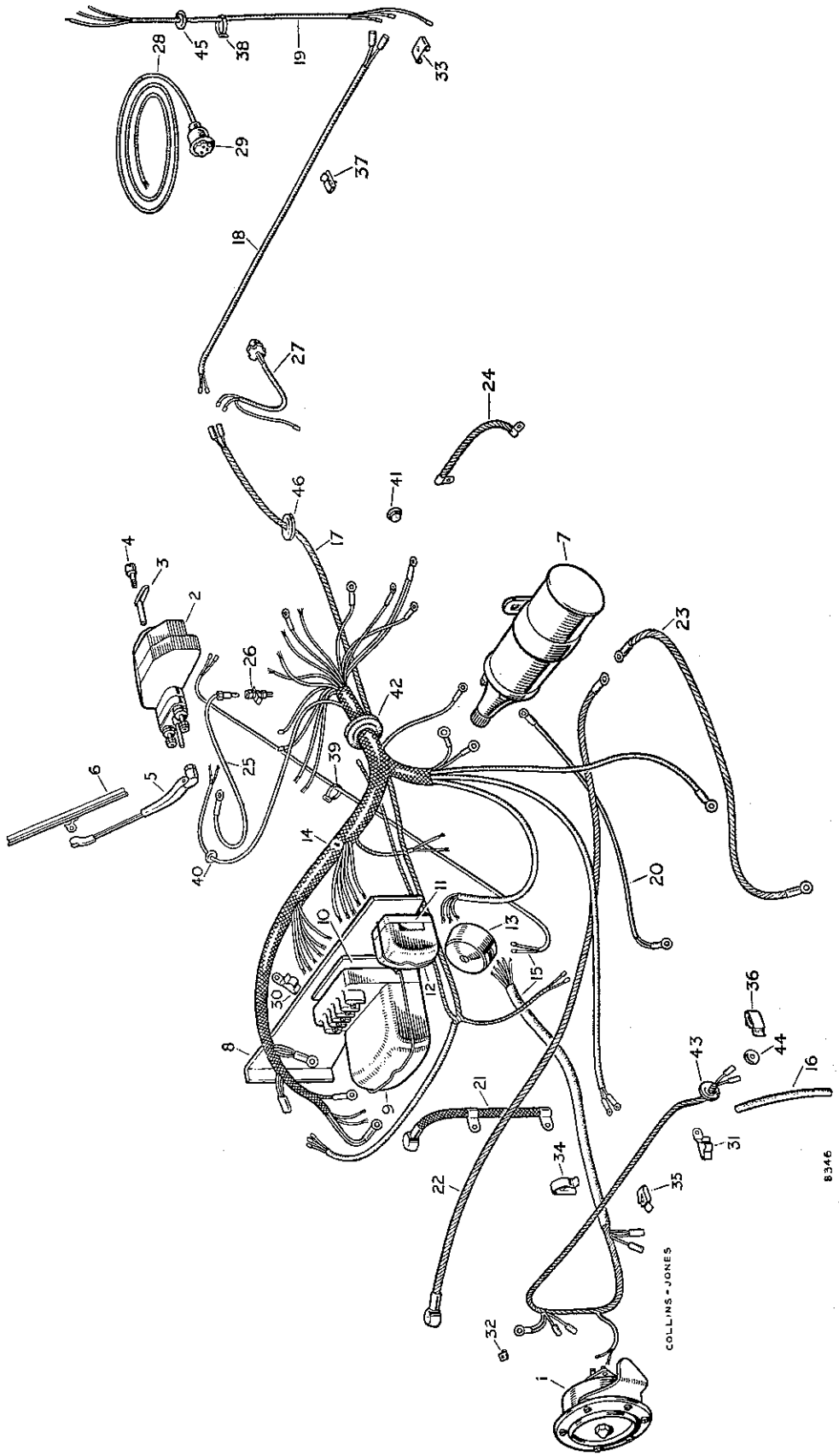

GENERAL ELECTRICAL EQUIPMENT

PLATE REF. 1 2 3 4	DESCRIPTION	Qty.	Part No.	REMARKS
	Harness for number plate	1	243508	
	Cable clip $\frac{3}{16}''$ hole } For number	4	8885	
	Cable clip $\frac{1}{4}''$ hole } plate harness	3	50637	
	Drive screw	3	78006	America. Dollar area
	Bolt (2 B.A x $\frac{1}{2}''$ long) } Fixing	1	234603	
	Spring washer } clip 8885	1	3073	
	Nut (2 B.A.)	1	2247	
	Cable clip for tail lamp lead	1	8136	
20	Cable, coil to distributor	1	219648	
21	Cable, battery to earth	1	235716	
22	Cable, battery to switch	1	231774	
	Drive screw fixing battery cables	2	50552	
23	Cable, switch to starter	1	216773	
24	Cable, gearbox to earth	1	219649	
25	Leads for wiper motor	1	233533	
26	Plug socket for leads on steering bracket	1	233531	
27	Trailer plug and lead	1	236138	
	Plug for trailer light cable	1	261511	
	Screw (5 B.A.) } Fixing	4	3279	
	Nut (5 B.A.) } plug for cable	4	3280	
28	Socket and cable for trailer light	1	230441	
29	Socket for trailer light cable	1	234117	
	Bolt ($\frac{5}{16}''$ x $\frac{11}{16}''$ long) } Fixing	1	237158	L.H.D.
	Spring washer } battery earth	1	3075	L.H.D.
	Nut ($\frac{5}{16}''$) } cable	1	2828	L.H.D.
30	Cable clip for frame harness, R.H. dash	1	3619	R.H.D.
	Cable clip for frame harness, R.H. dash	1	3618	L.H.D.
	Screw (2 B.A. x $\frac{1}{2}''$ long) }	1	71164	L.H.D.
	Spring washer } Fixing clip to dash	1	3073	L.H.D.
	Nut (2 B.A.) }	1	2247	L.H.D.
31	Cable clip at L.H. headlamp	1	3619	
32	Earthing clip for headlamp	1	234523	
33	Earthing clip on rear cross-member	2	236366	
	Screw (2 B.A. x $\frac{1}{2}''$ long) } Fixing earthing	2	77700	
	Spring washer } clip to rear	2	3073	
	Nut (2 B.A.) } cross-member	2	2247	
34	Cable clip, large } For headlamp and	1	233771	
35	Cable clip, small } horn cable harness	6	233770	
36	Cable clip for side lamp lead	2	233247	
37	Clip for rear cross-member harness	3	236365	
38	Bowden clip fixing stop light leads	2	41409	
	Bowden clip fixing extension leads	3	41409	L.H.D.
39	Bowden clip at steering box	1	50647	
40	Rubber grommet in dash for wiper motor lead	1	233244	
41	Rubber grommet for wiper feed lead hole	1	301347	
42	Rubber grommet, main harness, in dash	2	219681	
43	Rubber grommet, headlamp cable } At fan	2	219680	R.H.D.
	Rubber grommet, headlamp cable } cowl	3	219680	L.H.D.
44	Rubber grommet for side lamp lead	2	233243	
45	Rubber grommet, tail lamp lead	2	22066	
46	Rubber grommet for frame harness	2	233245	

cardiagn.com

BODY, CAPPINGS AND SOCKETS

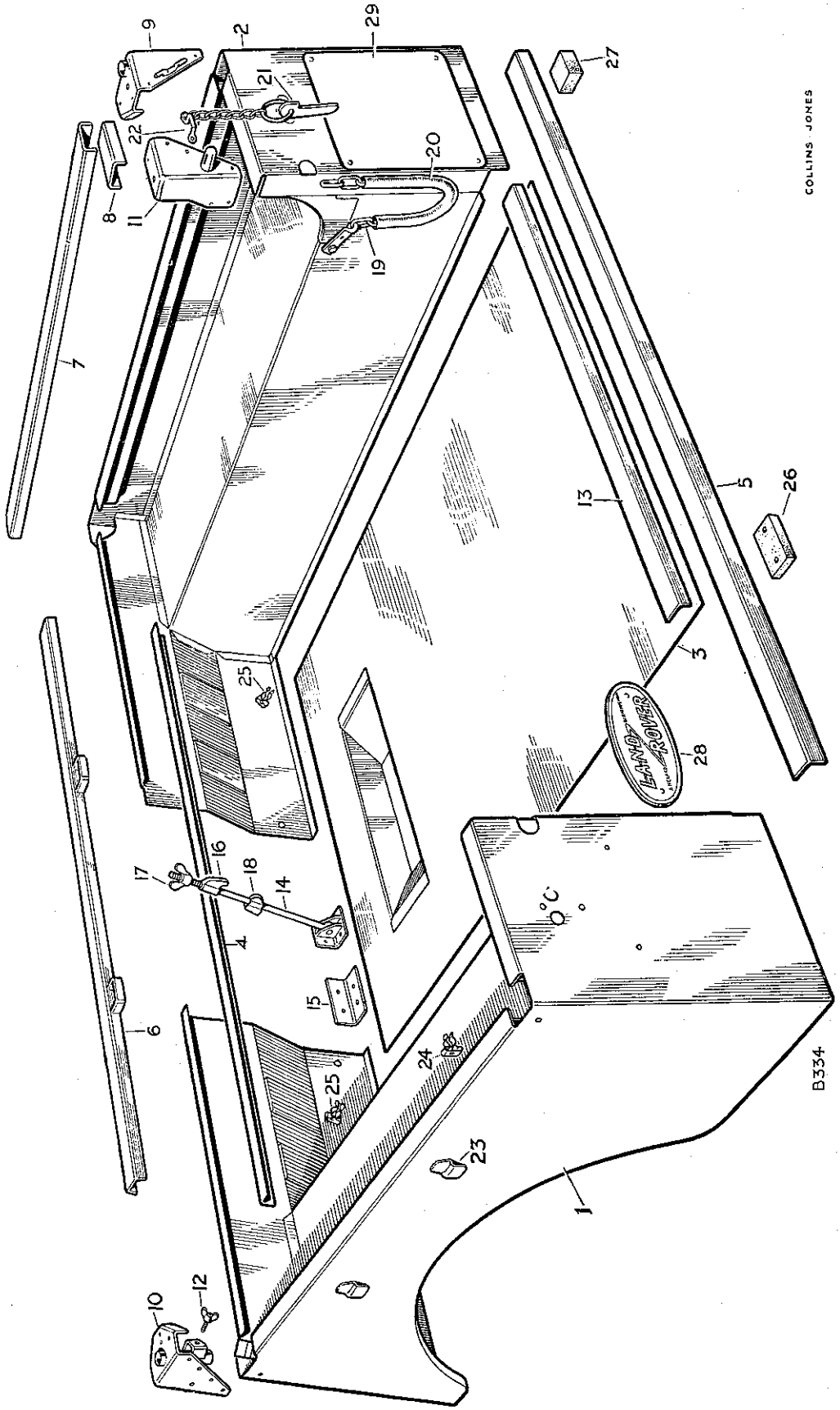

BODY, CAPPINGS AND SOCKETS

PLATE REF.	1 2 3 4 DESCRIPTION	Qty.	Part No.	REMARKS
	BODY FLOOR AND SIDES ASSEMBLY	1	304035	
1	Side and wheelarch complete L.H.	1	305274	
2	Side and wheelarch complete R.H.	1	305273	
	Cover plate for tail lamp holes	2	302230	America. Dollar area
	Rivet fixing cover plate	4	302222	America. Dollar area
3	Rear floor	1	302576	Vehicles numbered 26100001 to 26105376, 26135478, 26163399, 26300013, 26360004, 26631985 and 26661014
	Rear floor	1	304061	Vehicles numbered 26105377, 26135479, 26163400, 26300014, 26330014, 26360005, 26631986 and 26661015 onwards
4	Stiffener for back rest panel	1	301963	
5	Angle for rear body mounting	1	301131	
6	Capping for body back rest panel	1	301964	
7	Capping for body top, sides	2	300573	
8	Capping for body top, rear end panel	2	300659	
	Rivet — Fixing cappings	42	300784	
	Pop rivet — Fixing cappings	42	300781	
	Hood socket complete rear corner, L.H.	1	302381	
9	Hood socket complete rear corner, R.H.	1	302380	
10	Hood socket complete, front corner, L.H.	1	302383	
	Hood socket complete, front corner, R.H.	1	302382	
	Tapped plate for hood socket	4	302379	
	Rivet — Fixing rear sockets	20	300784	
	Pop rivet — Fixing rear sockets	4	300781	
	Rivet, short — Fixing front sockets	2	300783	
	Rivet, long — Fixing front sockets	8	300784	
	Pop rivet — Fixing front sockets	4	300781	
	Corner bracket and tailboard dowel, L.H.	1	300661	
11	Corner bracket and tailboard dowel, R.H.	1	300660	
	Rivet, short — Fixing corner brackets	2	300783	
	Rivet, long — Fixing corner brackets	10	300784	
	Pop rivet — Fixing corner brackets	4	300781	
12	Wing bolt for hood socket	4	301267	
	Split pin for wing bolt	4	2388	
13	Protecting strip at rear of floor	1	300825	
	Drive screw fixing strip	7	77707	
14	Clamp for spare wheel	1	300754	
15	Reinforcement bracket for clamp	1	300764	
	Bolt ($\frac{1}{4}''$ x $\frac{3}{4}''$ long) — Fixing bracket and clamp to floor and back rest	4	237141	
	Spring washer — Fixing bracket and clamp to floor and back rest	4	3074	
	Nut ($\frac{1}{4}''$) — Fixing bracket and clamp to floor and back rest	4	3819	

cardiagn.com

BODY, CAPPINGS AND SOCKETS

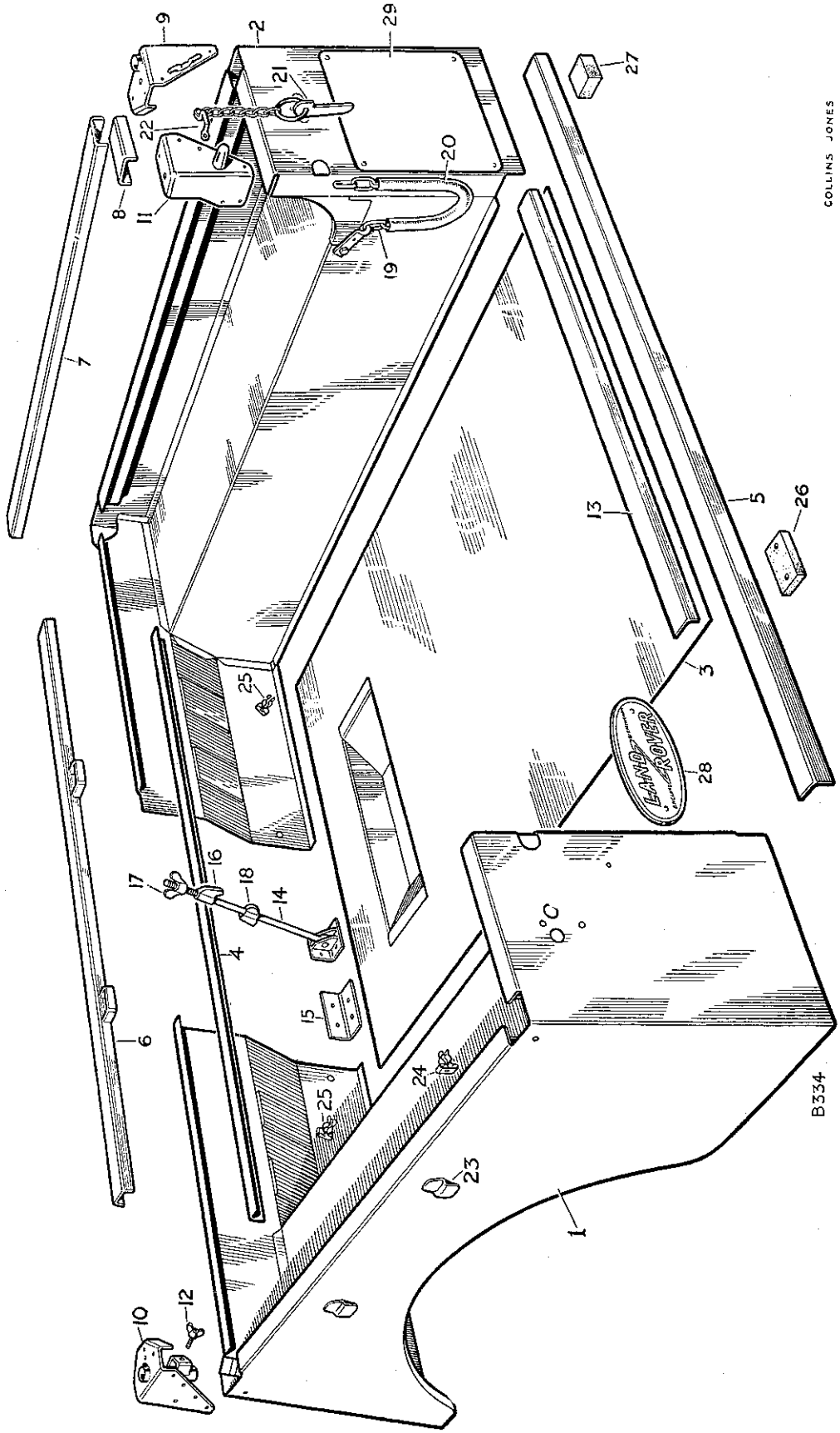

BODY, CAPPINGS AND SOCKETS

PLATE REF.	1 2 3 4 DESCRIPTION		Qty.	Part No.	REMARKS
16	Hook for spare wheel		1	301930	
17	Wing nut for hook		1	300765	
	Split pin for wing nut		2	2392	
18	Spring clip for spare wheel clamp		1	301985	
	Screw (2 B A x $\frac{3}{8}''$ long)	Fixing spring clip	2	77846	
	Nut (2 B.A.)		2	2247	
19	Chain for tailboard		2	300837	
20	Sleeve for chain		2	301109	
	Bolt ($\frac{1}{4}''$ x $\frac{3}{4}''$ long)	Fixing chain to wheelarch box	4	237141	
	Spring washer		4	3074	
	Nut ($\frac{1}{4}''$)		4	3819	
21	Key and chain for tailboard		2	300674	
	Screw (2 B.A. x $\frac{3}{4}''$ long)	Fixing chain to body	4	77887	
	Spring washer		4	3073	
	Nut (2 B.A.)		4	2247	
22	Staple for hood strap		2	300924	
23	Retaining plate for hood rope		4	301328	
24	Clip for jack handle		2	05555	
	Screw (2 B.A. x $\frac{3}{4}''$ long)	Fixing staples and spring clips to body	2	77861	
	Screw (2 B.A. x $\frac{1}{2}''$ long)		2	77700	
	Spring washer		4	3073	
	Plain washer		4	3851	
	Nut (2 B.A.)		4	3823	
25	Clip for starting handle		2	05555	
	Screw (2 B.A. x $\frac{1}{2}''$ long)	Fixing clips to back rest panel	2	77700	
	Spring washer		2	3073	
	Nut (2 B.A.)		2	3823	
26	Rubber buffer, floor to chassis		6	302580	
	Bifurcated rivet fixing buffer		12	302581	
27	Packing block, floor to chassis		2	311785	
28	"Land-Rover" nameplate $7\frac{3}{16}''$ overall		1	302361	
	Screw (2 B.A. x $\frac{1}{2}''$ long)	Fixing nameplate to body	2	77700	
	Nut (2 B.A.)		2	2247	
29	Registration plate		1	230368	
	Bolt ($\frac{5}{16}''$ x $\frac{13}{16}''$ long)	Fixing body to chassis	12	218566	
	Spring washer		12	3075	
	Shim washer		As required	3841	
	Nut ($\frac{5}{16}''$)		12	3490	

COLLINS JONES

cardiagn.com

SEAT BASE, SEATS, FRONT FLOOR AND FRONT WINGS

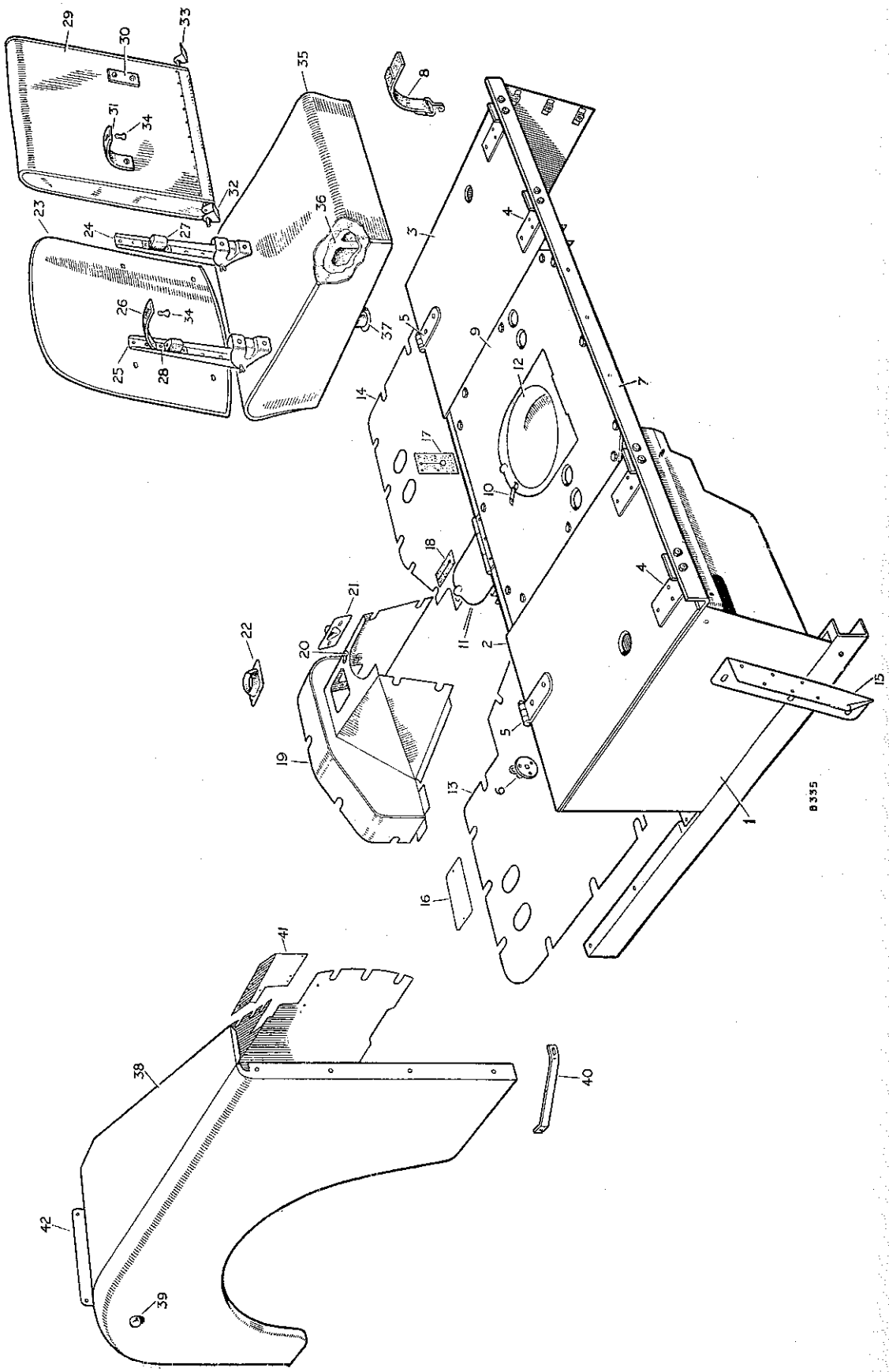

SEAT BASE, SEATS, FRONT FLOOR AND FRONT WINGS

PLATE REF.	1 2 3 4 DESCRIPTION	Qty.	Part No.	REMARKS
1	SEAT BASE AND FLOOR ASSEMBLY	1	301217	
2	Lid for tool locker	1	300845	
3	Lid for petrol tank	1	301075	
4	Hinge for lids	4	300849	
	Rivet fixing hinges to lids	12	300783	
	Bolt (1/4" x 9/16" long) } Fixing	8	237139	
	Spring washer } locker lid hinges	8	3074	
	Nut (1/4") } to back rest	8	3819	
5	Hasp for locker lids	2	300850	
	Screw (1/4" x 1/2" long) }	2	77833	
	Bolt (1/4" x 9/16" long) } Fixing hasps	2	237139	
	Spring washer } to locker lids	4	3074	
	Nut (1/4") }	4	3819	
6	Turnbuckle for locker lids	2	300851	
	Screw (2 B.A. x 1/2" long) } Fixing	6	77784	
	Spring washer } turnbuckle	6	3073	
	Nut (2 B.A.) } to heel board	6	3823	
7	Angle plate, body to seat base	1	301153	
	Screw (1/4" x 1/2" long) }	2	77833	
	Bolt (1/4" x 9/16" long) } Fixing	2	237139	
	Plain washer } angle to	4	2760	
	Spring washer } seat base	4	3074	
	Nut (1/4") }	4	3819	
	Bolt (1/4" x 9/16" long) }	5	237139	
	Spring washer } Fixing angle to body	5	3074	
	Nut (1/4") }	5	3819	
8	Retaining strap for petrol tank lid	1	301261	
	Drive screw } Fixing strap	1	77704	
	Plain washer } to back rest	1	3852	
9	Centre cover panel complete	1	301988	
10	Spring clip for P.T.O selector cover plate	1	301139	
	Rivet } Fixing	1	300783	
	Washer } spring clip	1	2869	
11	Inspection cover for gearbox	1	302460	
	Set screw (1/4" x 5/8" long) } Fixing	3	78097	
	Special bolt } centre panel	9	301503	
	Plain washer } to seat base	12	3831	
12	Cover for P.T.O knob	1	301957	
13	Toe plate L.H.	1	301174	
14	Toe plate R.H.	1	301875	
	Set bolt (1/4" x 5/8" long) } Fixing toe plates	29	218552	
	Plain washer } to dash and sills	29	3817	
	Set bolt (5/16" x 11/16" long) } Fixing	2	214923	
	Spring washer } heel board	2	3075	
	Plain washer } to chassis	2	3830	
	Bolt (5/16" x 1 3/16" long) } Fixing	1	237163	
	Spring washer } R.H. sill	1	3075	
	Nut (5/16") } to chassis	1	3490	
	Bolt (5/16" x 11/16" long) } Fixing sills	2	214923	
	Spring washer } to bracket	2	3075	
	Nut (5/16") } on dash	2	3490	

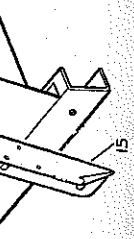

cardiagn.com

SEAT BASE, SEATS, FRONT FLOOR AND FRONT WINGS

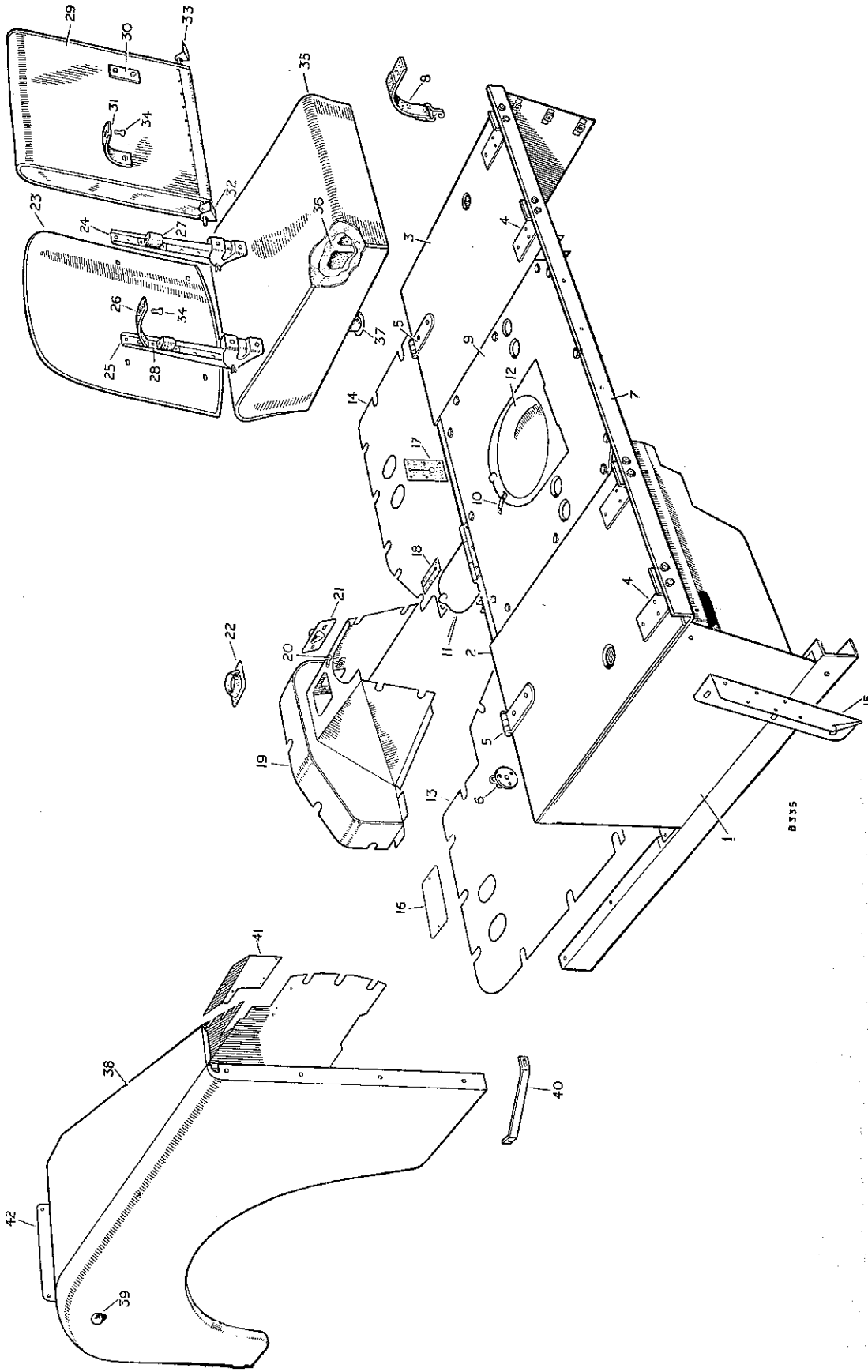

SEAT BASE, SEATS, FRONT FLOOR AND FRONT WINGS

PLATE REF. 1 2 3 4	DESCRIPTION	Qty.	Part No.	REMARKS
	Set bolt ($\frac{1}{4}$" x $\frac{9}{16}$" long) } Fixing seat base to body	6	237139	
	Spring washer	6	3074	
	Plain washer	6	3831	
15	Corner bracket L.H.	1	300815	
	Corner bracket R.H.	1	300814	
16	Cover plate for pedal holes	1	300881	
	Drive screw fixing cover plate	4	77704	
17	Rubber cover for hand brake	1	300914	
	Bifurcated rivet } Fixing cover to heel board	6	68087	
	Boss cap	6	66299	
18	Rubber cover for transfer gear lever	1	301147	
	Bifurcated rivet } Fixing cover to floor	6	68087	
	Boss cap	6	66299	
19	Gearbox cover complete	1	301876	
20	Spring clip for cover plate	1	301139	
	Rivet } Fixing spring clip	1	300783	
	Washer	1	2869	
21	Cover plate for reverse stop	1	301871	
	Plain washer } Fixing cover plate	2	3821	
	Spring washer	2	3074	
	Set bolt ($\frac{1}{4}$" x $\frac{9}{16}$" long)	2	237139	
22	Rubber seal for gear lever	1	301437	
23	Seat back rest, trimmed	3	301997	Vehicles numbered 26100001 to 26102280, 26131713 26161499, 26300002, 26330008, 26360001, 26630150 and 26660354
24	Hinge complete for seat back rest, R.H.	3	301976	
25	Hinge complete for seat back rest, L.H.	3	302181	
26	Retaining strap for seat back rest	3	302180	
	Plain washer } Fixing strap to L.H. hinge	3	3816	
	Rivet	3	300784	
	Spring washer } Fixing hinge	12	2284	
	Split pin	6	3892	
27	Rubber buffer	6	301966	
28	Securing plate for buffer	6	301975	
	Rivet fixing plate	9	300789	
	Set bolt ($\frac{1}{4}$" x $\frac{3}{8}$" long) } Fixing hinge to seat back rest	12	237138	
	Shakeproof washer	12	70884	
	Bolt ($\frac{1}{4}$" x $\frac{3}{4}$" long) } Fixing hinge to back rest panel	12	237141	
	Spring washer	12	3074	
	Nut ($\frac{1}{4}$")	12	3819	
29	Seat back rest trimmed	3	302609	Vehicles numbered 26102281, 26131714, 26161500, 26300002, 26330009, 26360002, 26630151 and 26660355 onwards
	Pad for seat back rest	3	302601	
30	Leather buffer for back rest	3	302611	
31	Retaining strap for seat back rest	3	302180	
	Plain washer } Fixing leather buffer	9	3816	
	Drive screw	9	78006	
32	Double hinge bracket	2	302615	
33	Single hinge bracket	2	302599	
	Plain washer between back rest and hinge	6	3822	
	Screw (2 B.A x $\frac{1}{2}$" long) } Fixing hinge brackets to panel	8	77700	
	Spring washer	8	3073	
	Nut (2 B.A.)	8	2247	
	Rubber buffer for seat back rest	6	312027	
	Plain washer } Fixing buffer to capping	6	3867	
	Drive screw	6	71149	

cardiagn.com

SEAT BASE, SEATS, FRONT FLOOR AND FRONT WINGS

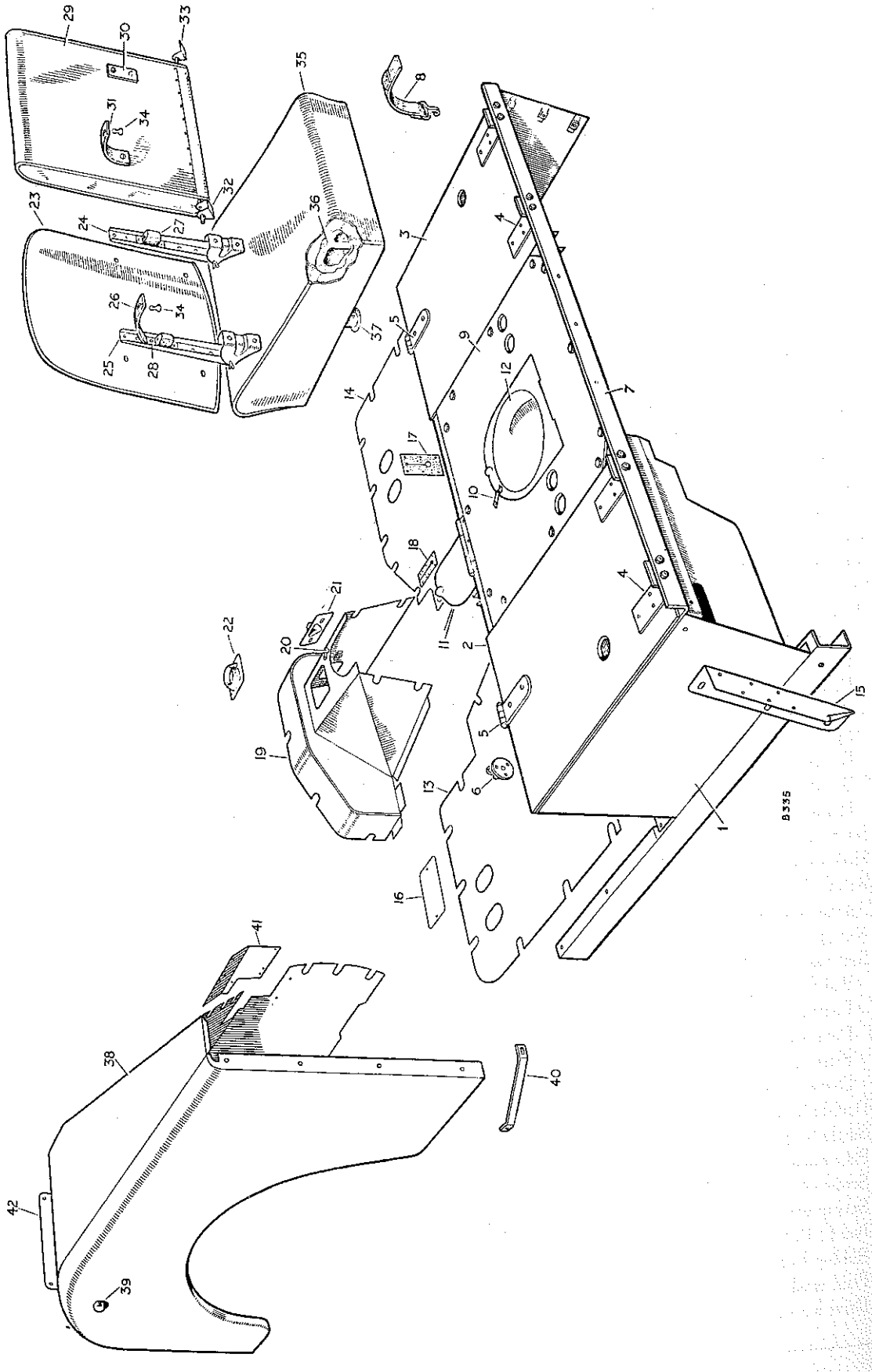

SEAT BASE, SEATS, FRONT FLOOR AND FRONT WINGS

PLATE REF.	1 2 3 4 DESCRIPTION		Qty.	Part No.	REMARKS
34	Stud for retaining strap		3	302463	
	Screw (2 B.A. x 1⅛″ long)	Fixing stud to back panel capping	3	77845	
	Plain washer		3	3816	
	Spring washer		3	3073	
	Nut (2 B.A.)		3	2247	
35	Seat cushion complete		3	304351	
36	Rubber interior for seat		3	300948	
37	Rubber dowel locating seat		6	302363	
	Screw (¼″ x 1″ long) fixing dowel		6	68845	
	Front wing complete, R.H.		1	302550	
38	Front wing complete, L.H.		1	302551	
39	Rubber buffer in wing for door		2	302552	
	Set bolt (5/16″ x ⅞″ long)	Fixing wings to scuttle side pillar	8	237161	
	Plain washer		8	2249	
	Spring washer		8	3075	
	Bolt (¼″ x ⅝″ long)	Fixing wings to dash and grille frame	18	218552	
	Spring washer		18	3074	
	Plain washer		12	2215	
	Nut (¼″)		18	3819	
40	Stay for front wing		2	301124	
	Screw (2 B.A. x ½″ long)	Fixing stay to wing and dash	4	77700	
	Spring washer		4	3073	
	Plain washer		2	2983	
	Nut (2 B.A.)		4	3823	
41	Cover plate for wing valance, L.H.		1	301208	R.H.D.
	Cover plate for wing valance, R.H.		1	301209	R.H.D.
	Cover plate for wing valance		1	301207	L.H.D.
	Screw (2 B.A. x ⅜″ long)	Fixing cover plates to valances	8	77846	
	Plain washer, small		4	2260	
	Plain washer, large		4	3008	
	Spring washer		8	3073	
	Nut (2 B.A.)		8	3823	
42	Registration plate		1	230368	

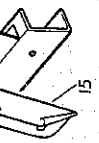

cardiagn.com

TAILBOARD, DOORS AND SIDE SCREENS

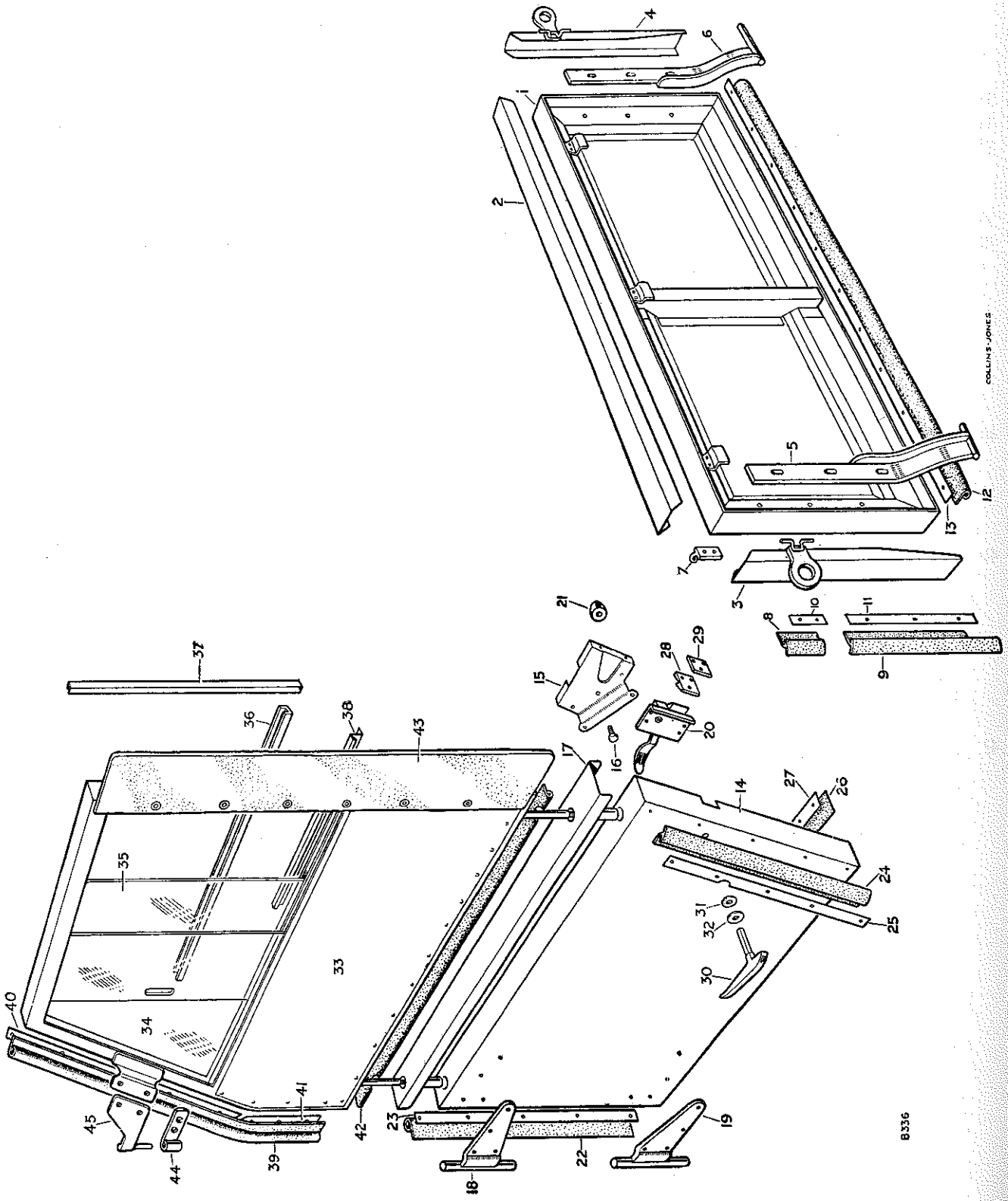

TAILBOARD, DOORS AND SIDE SCREENS

PLATE REF.	1 2 3 4 DESCRIPTION	Qty.	Part No.	REMARKS
1	TAILBOARD ASSEMBLY	1	300810	
	TAILBOARD ASSEMBLY	1	302303	
	Mounting bracket for number plate support	1	302240	America Dollar area
	Rivet } Fixing mounting bracket	4	300789	
	Pop rivet } to tailboard	2	300919	
	Tailboard complete, less hinges	1	262215	
2	Top capping for tailboard	1	300588	
3	Side capping for tailboard, L.H.	1	300970	
4	Side capping for tailboard, R.H.	1	300969	
	Rivet } Fixing cappings	16	300783	
	Pop rivet, short } Fixing cappings	20	300919	
	Pop rivet, long } Fixing cappings	4	300781	
5	Hinge for tailboard, L.H.	1	302034	
6	Hinge for tailboard, R.H.	1	302032	
	Spring washer } Retaining tailboard hinge	1	2288	
	Plain washer } Retaining tailboard hinge	1	3895	
	Split pin } Retaining tailboard hinge	1	3896	
	Set bolt ($\frac{1}{4}$" x $\frac{3}{4}$" long) } Fixing hinge to tailboard	6	237141	
	Plain washer } Fixing hinge to tailboard	6	3817	
	Spring washer } Fixing hinge to tailboard	6	3074	
7	Hook for tailboard chain	2	300838	
	Bolt ($\frac{1}{4}$" x $\frac{3}{4}$" long) } Fixing chain to tailboard	4	237141	
	Spring washer } Fixing chain to tailboard	4	3074	
	Nut ($\frac{1}{4}$") } Fixing chain to tailboard	4	3819	
8	Weather strip, upper } Fort tailboard side	2	301432	
9	Weather strip, lower } Fort tailboard side	2	301416	
	Retainer, upper, R.H. } For side weather strip	1	301870	
10	Retainer, upper, L.H. } For side weather strip	1	301418	
	Retainer, lower, R.H. } For side weather strip	1	301419	
11	Retainer, lower, L.H. } For side weather strip	1	301420	
	Pop rivet, short } Fixing side retainers to tailboard	10	300781	
	Pop rivet, long } Fixing side retainers to tailboard	2	300782	
12	Weather strip for tailboard bottom	1	301421	
13	Retainer for bottom strip	1	301422	
	Rivet fixing bottom retainer	12	300789	
14	FRONT DOOR ASSEMBLY, L.H.	1	302596	
	FRONT DOOR ASSEMBLY, R.H.	1	302595	
	DOOR CORNER GUSSET PLATE ASSEMBLY, L.H.	1	302335	
	DOOR CORNER GUSSET PLATE ASSEMBLY, R.H.	1	302334	
15	Door corner gusset plate, L.H.	1	302328	
	Door corner gusset plate, R.H.	1	302327	
16	Bolt ($\frac{1}{4}$" x $\frac{13}{16}$" long) } Fixing plate	2	218565	
	Spring washer } Fixing plate	2	3074	
	Plain washer } Fixing plate	2	3912	
	Nut ($\frac{1}{4}$") } Fixing plate	2	3819	

cardiagn.com

TAILBOARD, DOORS AND SIDE SCREENS

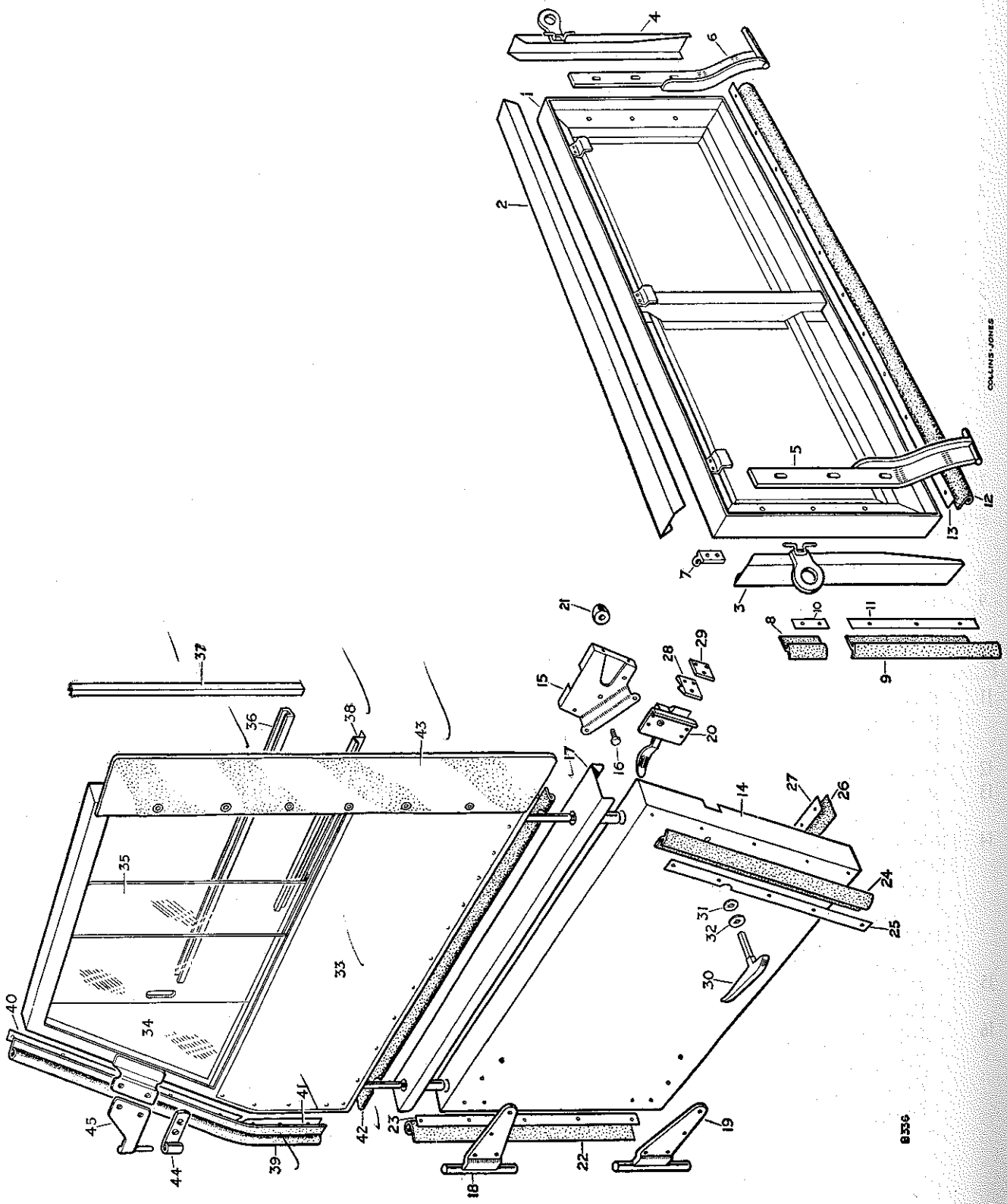

TAILBOARD, DOORS AND SIDE SCREENS

PLATE REF.	1 2 3 4 DESCRIPTION	Qty.	Part No.	REMARKS
	Pop rivet } Fixing gusset plate to door	4	300919	
	Screw (2 B.A x ½″ long)	4	77869	
	Spring washer	4	3073	
	Nut (2 B.A.)	4	3823	
	Special bolt	4	301502	
	Spring washer	4	3074	
	Nut (¼″)	4	3819	
17	Top capping for door, L.H.	1	300917	
	Top capping for door, R.H.	1	300916	
	Rivet } Fixing cappings	20	300783	
	Pop rivet	20	300919	
18	Hinge complete, R.H. upper and L.H. lower	2	300630	
19	Hinge complete, L.H. upper and R.H. lower	2	300631	
	Bolt (¼″ x ¾″ long) } Fixing hinges to doors	16	237141	
	Plain washer	4	2760	
	Spring washer	16	3074	
	Nut (¼″)	16	3819	
20	Door lock complete, L.H.	1	307976	
	Door lock complete, R.H.	1	307975	
	Set screw (2 B.A. x ½″ long) } Fixing door locks	8	77700	
	Spring washer	8	3073	
21	Rubber buffer for doors	4	301141	
	Plain washer } Fixing rubber buffer	4	2869	
	Drive screw	4	64355	
22	Weather strip for door, front	2	301407	
23	Retainer for front weather strip	2	301409	
	Rivet fixing front retainer	14	300789	
24	Weather strip for door, rear	2	301411	
	Retainer, R.H. } For rear weather strip	1	302554	
25	Retainer, L.H.	1	302555	
	Pop rivet fixing rear retainers	12	300781	
26	Weather strip for door, bottom	2	301893	
27	Retainer for bottom weather strip	2	301415	
	Rivet fixing bottom retainer	18	300789	
28	Striking plate for door	2	300975	
	Screw (2 B.A. x ½″ long) } Fixing striking plate to body	6	77784	
29	Tapped plate	2	301967	
30	Door handle	2	302541	
31	Rubber grommet for door handle	2	302544	*
	Rubber grommet for door handle	2	304096	†
32	Special washer } Fixing door handle	2	3938	
	Split pin	2	3939	

* Vehicles numbered 26100001 to 36101069, 36130778, 36160651, 36300003, 36330004, 36360002, 36631330 and 36660288
† Vehicles numbered 36101070 36130779 36160652, 36300004, 36330005, 36360003, 36631331 and 36660289 onwards

cardiagn.com

TAILBOARD, DOORS AND SIDE SCREENS

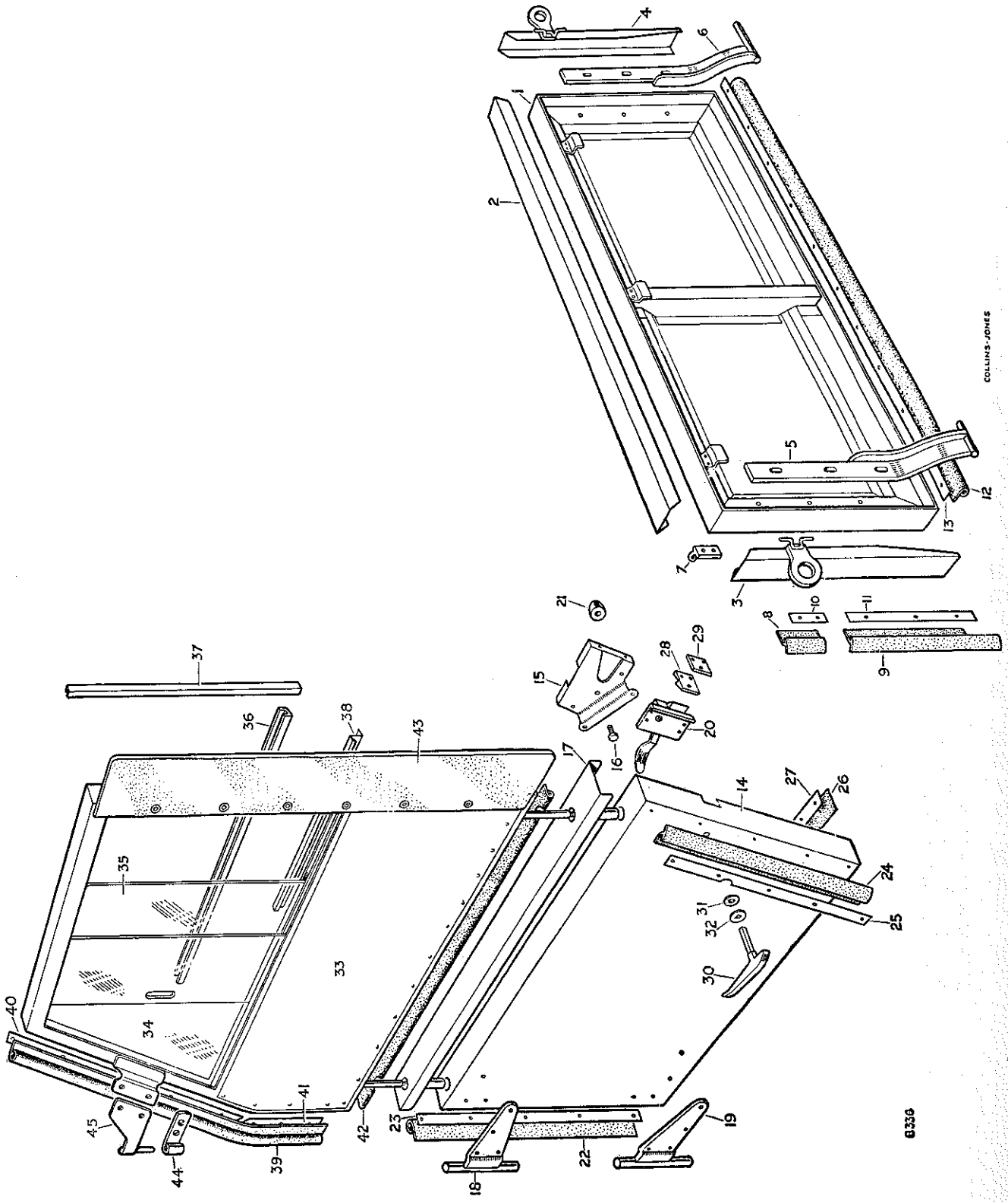

cardiagn.com

TAILBOARD, DOORS AND SIDE SCREENS

PLATE REF.	1 2 3 4 DESCRIPTION	Qty.	Part No.	REMARKS
33	SIDE SCREEN ASSEMBLY, L.H.	1	302561	
	SIDE SCREEN ASSEMBLY, R.H.	1	302560	
34	Fixed window, front	2	302619	
35	Sliding window, rear	2	304020	
	Knob for sliding window	2	302628	
	Drive screw fixing channel	20	77707	
	Channel for windows, top	2	301286	
36	Channel for windows, bottom	2	301287	
37	Channel for windows, rear	2	301285	
38	Filler for fixed window	2	301288	
	Drive screw fixing filler	6	77707	
	Drive screw fixing retainers	22	77789	
39	Rubber draught strip, front edge	2	301157	
40	Retainer, upper, L.H. } For	1	301160	
	Retainer, upper, R.H. } For	1	301159	
41	Retainer, lower, R.H. } For draught strip	1	301162	
	Retainer, lower, R.H. } For draught strip	1	301161	
	Drive screw, fixing retainers and strip	20	77704	
42	Draught strip, lower edge	2	301158	
	Spring clip fixing draught strip	18	73037	
43	Rear flap for side curtain, L.H.	1	301096	
	Rear flap for side curtain, R.H.	1	301097	
	Rivet fixing flap	16	300781	
44	Hinge for side screen	2	300984	*
	Hinge for side screen	2	304104	†
	Set bolt ($\frac{1}{4}''$ x $\frac{31}{32}''$ long) } Fixing hinge to windscreen	2	218552	
	Bolt ($\frac{1}{4}''$ x $\frac{3}{16}''$ long) } Fixing hinge to windscreen	2	218565	
	Plain washer } Fixing hinge to windscreen	4	3840	
	Shakeproof washer } Fixing hinge to windscreen	4	70884	
	Nut ($\frac{1}{4}''$) } Fixing hinge to windscreen	2	3819	
	Plain washer } Fixing side screen to door	4	3843	
	Nut ($\frac{7}{16}''$) } Fixing side screen to door	4	3844	
45	Hinge plate, L.H. } For side screen	1	304101	
	Hinge plate, R.H. } For side screen	1	304100	
	Bolt ($\frac{1}{4}''$ x $\frac{3}{4}''$ long) } Fixing hinge plate	4	237141	
	Plain washer } Fixing hinge plate	4	3821	
	Spring washer } Fixing hinge plate	4	3074	
	Nut ($\frac{1}{4}''$) } Fixing hinge plate	4	3819	
	SIDESCREEN HINGE PLATE BRACKET KIT	1	306033	
	Side screen hinge plate, R.H.	1	306011	
	Side screen hinge plate, L.H.	1	306012	
	Packing piece	6	306015	
	Bolt ($\frac{1}{4}''$ x $1\frac{3}{4}''$ long) } Fixing hinge plate	6	235570	
	Plain washer } Fixing hinge plate	12	2213	
	Nut ($\frac{1}{4}''$) } Fixing hinge plate	6	2823	

* Vehicles numbered 26100001 to 26105442, 26135778, 26163455, 26300013, 26330013, 26360004, 26631952 and 26661020

† Vehicles numbered 26105443 26135779, 26163456 26300014, 26360005, 26631953 and 26661021 onwards

cardiagn.com

DASH, WINDSCREEN AND BONNET

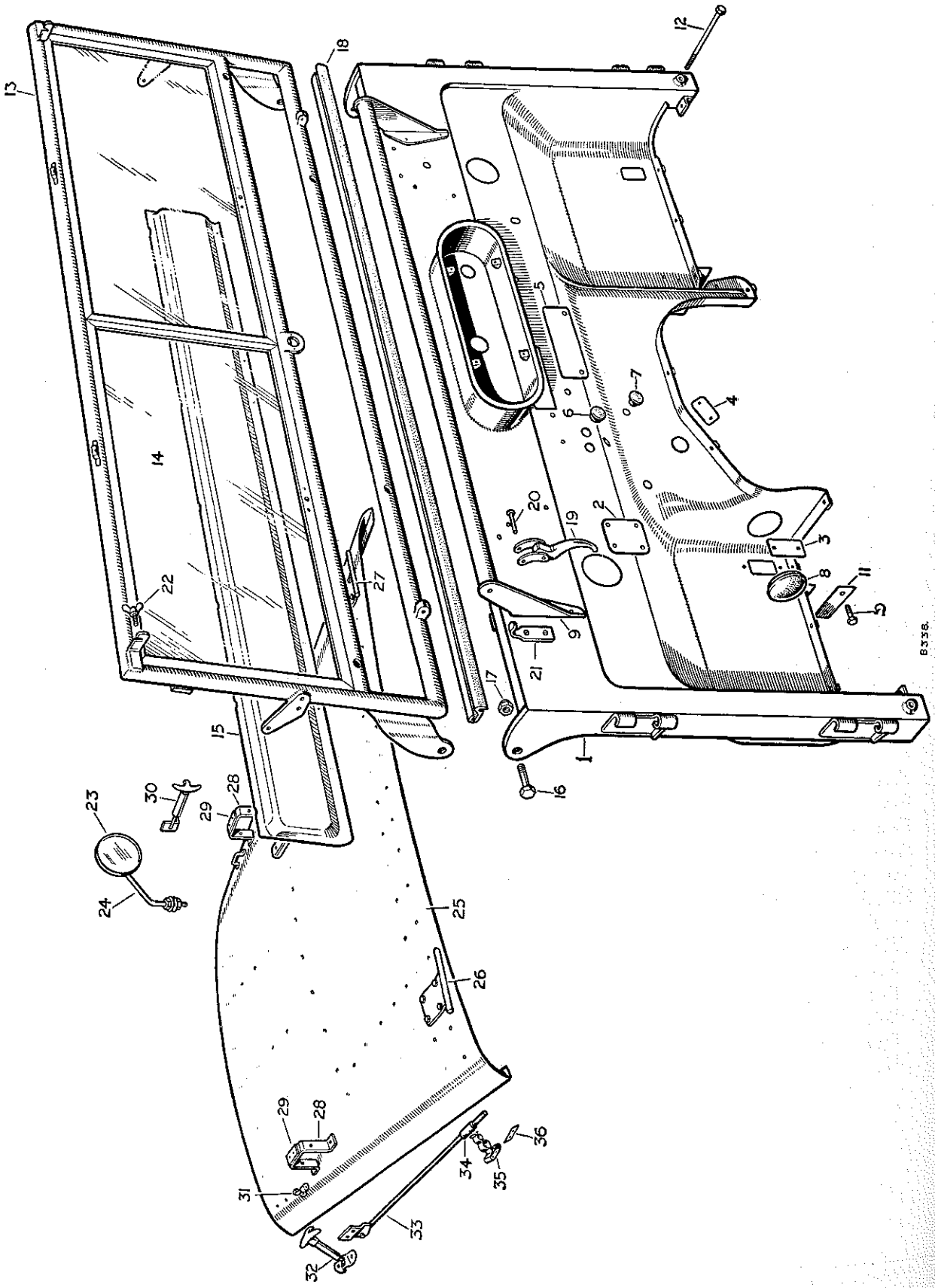

DASH, WINDSCREEN AND BONNET

PLATE REF.	1 2 3 4 DESCRIPTION	Qty.	Part No.	REMARKS
1	Dash complete	1	302534	
2	Cover panel for steering cutout	1	300918	
3	Cover plate for accelerator pedal hole	1	300901	
	Bolt (¼″ x 9/16″ long) } Fixing	2	237139	
	Spring washer } cover plate	2	3074	
	Nut (¼″) } to dash	2	3819	
4	Access plate for bottom rocker shaft	1	301091	
	Drive screw fixing plate	2	74133	
5	Cover panel for governor cutout in dash	1	301148	
	Bolt (¼″ x 9/16″ long) }	2	237139	
	Spring washer } Fixing cover panel	2	3074	
	Nut (¼″) }	2	2823	
6	Rubber plug, large } For holes	2	301346	
7	Rubber plug, small } in dash	4	301347	
8	Rubber plug for starter housing bolt hole	1	301389	
	Rubber plug, redundant accelerator bracket hole	2	307220	L.H.D.
9	Hand rail complete	1	301253	
	Set bolt (¼″ x 9/16″ long) } Fixing rail	2	237139	
	Spring washer } to dash	2	3074	
10	Bolt (⅜″ x 4″ long) }	4	215301	
11	Spacer } Fixing dash to	2	301282	
	Plain washer } chassis at	2	3680	
	Spring washer } reinforcement brackets	4	3076	
	Nut (⅜) }	4	3485	
12	Tie bolt (½″ x 8⅛″ long) } Fixing	2	300827	
	Plain washer } dash to	4	3829	
	Nut (½″) } chassis	4	3828	
	Windscreen complete assembly	1	300794	
	Windscreen complete assembly	1	302584	America Dollar area
13	Windscreen, less bottom panel	1	301872	
	Windscreen, less bottom panel	1	301922	America Dollar area
14	Glass for windscreen	2	300583	
	Glass for windscreen	2	301403	America Dollar area
	Glazing strip for glass	2	261618	
15	Bottom panel for windscreen	1	300566	
	Drive screw } Fixing	7	69310	
	Pop rivet } bottom panel	19	300781	
16	Special bolt (½″ x 1½″ long) } Fixing windscreen	2	234829	
17	Special self-locking nut } to dash	2	234824	
18	Rubber sealing strip for windscreen	1	302300	
	Plain washer } Fixing strip to	5	2869	
	Drive screw } windscreen	5	77704	

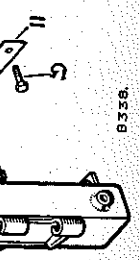

cardiagn.com

DASH, WINDSCREEN AND BONNET

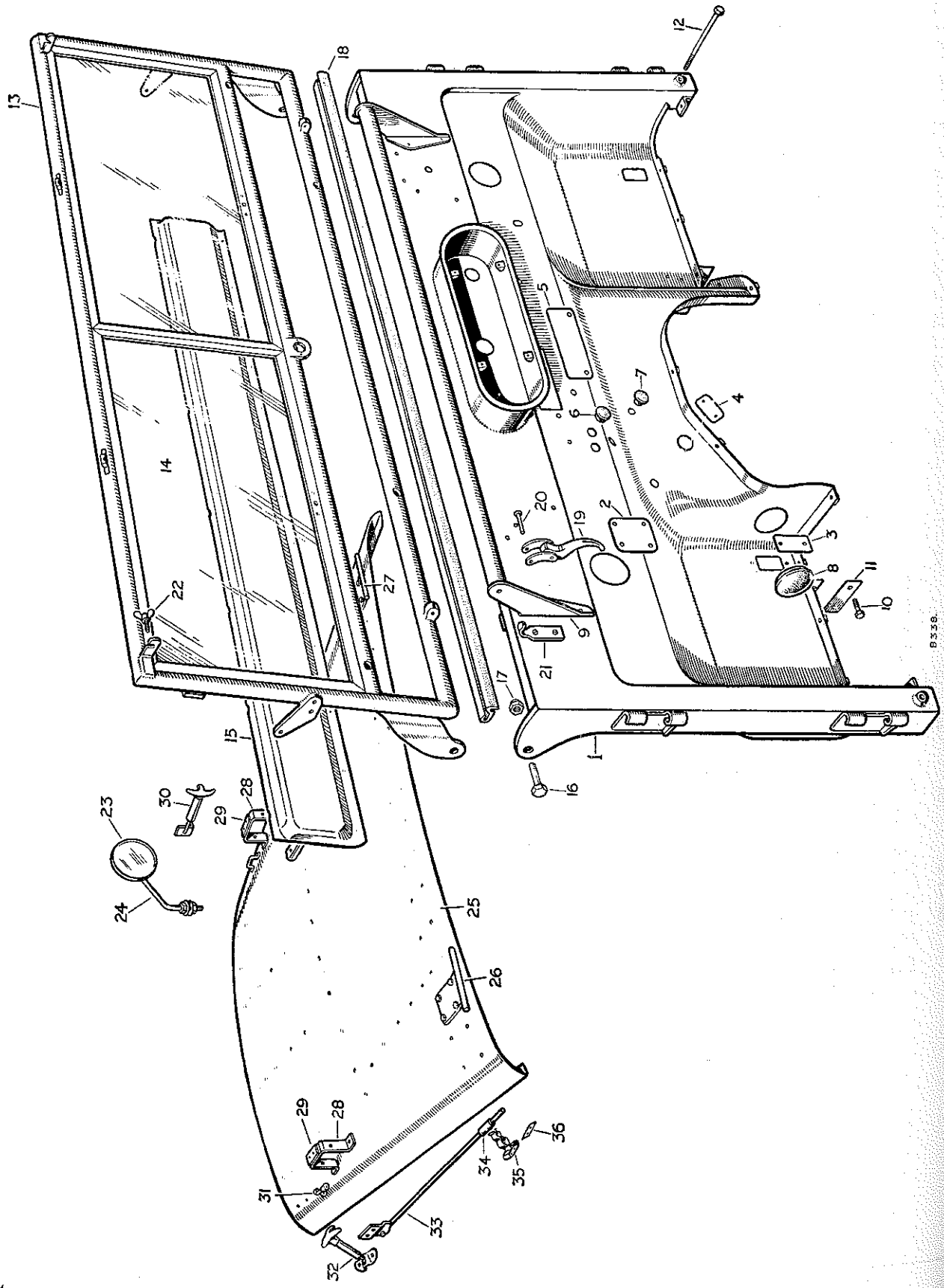

PLAT REF	
19	
20	
21	
22	
23	
24	
25	
26	
27	
28	
29	
30	
31	

cardiagn.com

DASH, WINDSCREEN AND BONNET

PLATE REF.	1 2 3 4 DESCRIPTION		Qty.	Part No.	REMARKS
19	Fastener for windscreen		2	302337	
20	Joint pin	Fixing fastener to windscreen frame	2	300844	
	Plain washer		4	3816	
	Split pin		2	2388	
21	Catch for windscreen fastener		2	302338	
	Set bolt ($\frac{1}{4}$" x $\frac{3}{4}$" long)	Fixing catch to dash	2	77697	
	Set screw ($\frac{1}{4}$" x $\frac{3}{4}$" long)		2	77698	
	Spring washer		2	3074	
22	Wing bolt	In top of windscreen for hood fixing	2	300690	
	Split pin		2	2388	
	Licence holder		1	26470	
	Mirror complete		1	272244	
23	Mirror only		1	279880	
24	Arm for mirror		1	262658	
	Nut ($\frac{3}{8}$")	Fixing mirror to wing	2	2827	
	Plain mirror, small		1	2219	
	Plain washer, large		1	2851	
	BONNET ASSEMBLY		1	300809	
25	Bonnet top panel		1	300734	
26	Hinge for bonnet, L.H.		1	300743	
27	Hinge for bonnet, R.H.		1	300742	
	Bolt ($\frac{1}{4}$" x $\frac{3}{4}$" long)	Fixing hinges to bonnet panel	8	237141	
	Spring washer		8	3074	
	Nut ($\frac{1}{4}$")		8	3819	
28	Support for windscreen		2	302325	
29	Tape for windscreen support		2	70916	
	Bifurcated rivets fixing tape		4	68087	
	Socket for bonnet prop rod		1	302440	
	Bolt ($\frac{1}{4}$" x $\frac{13}{16}$" long)	Fixing supports and socket to bonnet top	4	218565	
	Plain washer		2	2552	
	Spring washer		4	3074	
	Nut ($\frac{1}{4}$")		4	3819	
30	Fastener for windscreen		2	302326	
31	Staple for bonnet and windscreen fastener		2	300693	

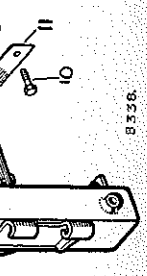

cardiagn.com

DASH, WINDSCREEN AND BONNET

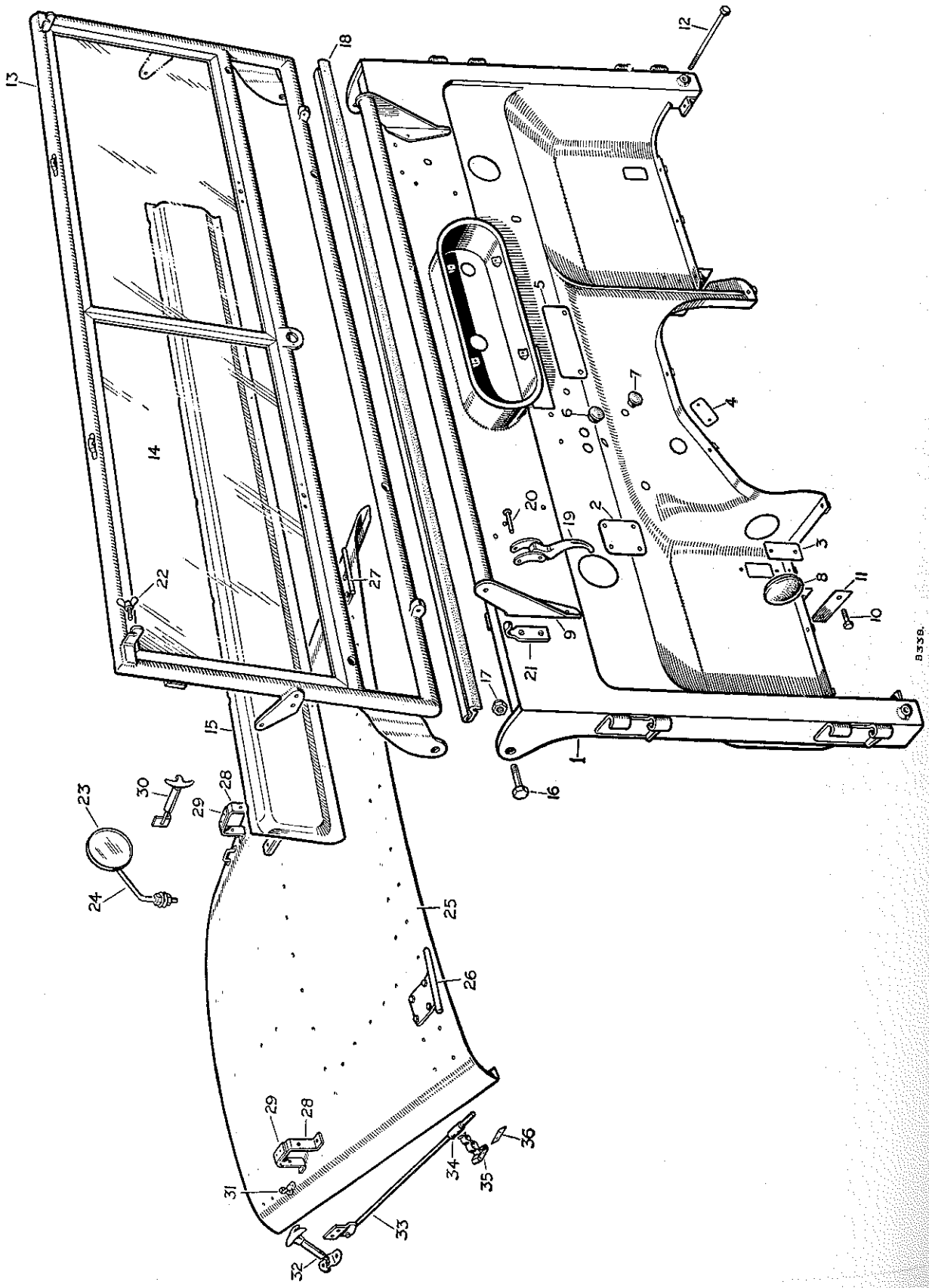

DASH, WINDSCREEN AND BONNET

PLATE REF.	1 2 3 4 DESCRIPTION		Qty.	Part No.	REMARKS
	Screw (2 B.A. x ½" long)	Fixing staples to bonnet top	6	77700	
	Plain washer		6	2678	
	Spring washer		6	3073	
	Nut (2 B.A.)		6	3823	
32	Bonnet fastener		2	300691	
	Bolt (¼" x ⅝" long)	Fixing fastener to wing	4	218552	
	Plain washer		4	2215	
	Spring washer		4	3074	
	Nut (¼")		4	3819	
33	Prop rod for bonnet		1	300834	
34	Rubber tube for bonnet prop rod		1	301393	
	Bolt (¼" x ⅝" long)	Fixing prop rod to wing	2	218552	
	Spring washer		2	3074	
	Nut (¼")		2	3819	
35	Spring clip for parking bonnet prop rod		1	300766	*
	Spring clip for parking bonnet prop rod		1	302635	†
	Screw (2 B.A. x ½" long)	Fixing clip	2	77700	
	Spring washer		2	3073	
36	Tapped plate		1	301092	

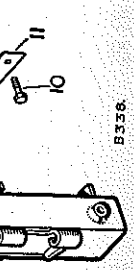

* Vehicles numbered 26100001 to 26104672, 26133128, 26162548, 26300006, 26330011, 26360004 and 26660972
† Vehicles numbered 26104673, 26133129, 26162549, 26300007, 26330012, 26360005 and 26660973 onwards

cardiagn.com

TOOLS

PLATE REF. 1 2 3 4	DESCRIPTION	Qty.	Part No.	REMARKS
	Wheel brace	1	274433	
	Lifting jack	1	278345	
	Extension for jack	1	261512	
	Wooden handle for extension	1	261513	
	Tyre pump	1	233283	
	Connector for tyre pump	1	244934	
	Grease gun	1	233284	
	Starting handle	1	218508	
	Tool roll	1	219704	
	Combination pliers	1	2703	
	Screwdriver	1	234619	
	Spanner $\frac{3}{16}''$ x $\frac{1}{4}''$	1	2705	
	Spanner $\frac{5}{16}''$ x $\frac{7}{16}''$	1	230736	
	Spanner, single end $\frac{3}{8}''$	1	277320	
	Adjustable spanner	1	2707	
	Distributor screwdriver	1	240836	
	Sparking plug spanner	1	212735	
	Box spanner	1	52485	
	Tommy bar	1	1403	
	Tyre pressure gauge	1	05321	
	Tyre lever	2	233261	Export

cardiagn.com

TRIMMING RAW MATERIALS

PLATE REF. 1 2 3 4	DESCRIPTION	Qty.	Part No.	REMARKS
	Cotton duck 72″ wide	As required	91957	
	Sheet wadding	As required	91341	
	Cotton webbing $\frac{1}{32}$″ x 1″	As required	91878	
	Cotton webbing $\frac{1}{8}$″ x 1″	As required	91880	
	Cotton webbing $\frac{5}{64}$″ x $\frac{1}{2}$″	As required	91879	
	Seaming cord	As required	91171	
	Thin plain cloth 36″ wide	As required	91783	
	Black canvas 54″ wide	As required	91291	
	Black felt 50″ wide	As required	91819	
	Vynide, green 50″ wide	As required	91812	
	Piping, green	As required	91857	
	Thread, green No 18	As required	91814	
	Thread, green No 25	As required	91813	
	Thread, black No 50	As required	91256	
	Fine fluted rubber matting 36″ wide	As required	261577	
	Special paint, Green 1 pint tin	As required	262069	
	Special paint, Green 1 gallon tin	As required	262072	
	Special paint, Ivory 1 pint tin	As required	261887	
	Special paint, Ivory 1 gallon tin	As required	261902	
	Special paint, Blue 1 pint tin	As required	244272	
	Special paint, Blue 1 gallon tin	As required	244275	
	Special paint, Red 1 pint tin	As required	244276	
	Special paint, Red, 1 gallon tin	As required	244279	
	Special paint, Beige 1 pint tin	As required	244280	
	Special paint, Beige 1 gallon tin	As required	244283	
	Special paint, Grey 1 pint tin	As required	244284	
	Special paint, Grey 1 gallon tin	As required	244287	
	Thinners 1 pint tin	As required	261906	
	Thinners 1 gallon tin	As required	261909	
	Aluminium paint 1 pint tin	As required	262091	
	Brake fluid 1 pint tin	As required	260681	
	Brake fluid 1 quart tin	As required	262079	
	$\frac{1}{8}$″ Welding rod (1 lb.)	As required	98018	

cardiagn.com

NUMERICAL INDEX

This list, in part number numerical order, gives the page on which the item will be found

Part No	Page No.
1403	148
1481	31
1510	81
1643	49
1645	45
1659	103
2069	19
2094	33
2096	97
2102	9
2208	61
2210	31
2213	39
2215	135
2217	43
2218	89
2219	37
2220	21
2223	101
2226	39
2228	111
2247	21
2249	107
2260	55
2264	63
2284	133
2288	137
2290	89
2347	7
2358	101
2388	89
2389	57
2392	9
2393	77
2396	61
2422	19
2425	73
2428	47
2441	93
2499	55
2500	9
2504	19
2529	47
2550	31
2552	145
2555	15
2678	21
2703	148
2705	148
2707	148
2712	148
2728	23
2729	23
2760	131
2766	61
2822	77
2823	9
2827	31
2828	17
2836	43
2842	17
2851	145
2862	109
2863	61
2869	131
2876	57
2885	109
2890	7
2893	135
2974	89
2980	45
2981	99
2995	7
3005	19
3008	135
3040	95
3052	77
3055	13
3057	23
3072	119
3073	21
3074	7
3075	11
3076	31
3077	11
3088	17
3100	109
3101	109
3136	111
3200	37
3236	39
3237	55
3238	39
3259	47
3279	97
3280	97
3289	31
3290	37
3292	71
3294	65
3300	47
3319	39
3359	29
3421	55
3485	123
3490	97
3522	101
3551	33
3580	99
3604	11
3610	115
3618	115
3619	35
3650	37
3651	37
3663	105
3674	37
3680	75
3697	49
3746	15
3764	57
3771	33
3779	23
3780	23
3783	31
3787	31
3792	23
3803	7
3816	115
3817	131
3819	75
3821	133
3822	95
3823	97
3828	143
3829	143
3830	131
3831	131
3840	141
3841	129
3843	141
3844	141
3850	97
3851	97
3852	131
3867	133
3868	35
3892	133
3895	137
3896	137
3912	137
3926	111
3936	21
3938	139
3939	139
6316	11
6318	11
6395	9
6809	7
6936	73
8136	125
8885	125
9499	7
01017	45
01035	19
01291	7
01384	89
01564	61
01565	61
01645	25
03017	9
03018	9
03020	9
03092	9
03093	9
03129	7
03170	11
03188	9
03459	97
03649	49
03971	123
04788	99
04799	99
04800	99
04801	99
04802	99
05321	148
05366	63
05555	129
05852	49
05853	49
05854	49
05857	49
06009	63
06395	45
06397	45
06402	45
06405	45
06417	39
06419	39
06421	49
06422	49
06424	47
06718	51
06735	61
06846	39
06860	97
07048	85
07091	99
07095	7
07096	7
07118	39
07142	73
07160	87
07164	89
07289	39
07295	63
07296	63
07297	63
07316	63
07317	63
07343	73
07488	19
07657	73
07663	61
07676	73
07877	7
07884	9
07902	61
07904	61
08153	45
08185	45
08188	45
08250	45
08276	63
08566	37
08832	73
09004	17
09005	17
09017	9
09023	15
09025	19
09027	19
09034	7
09037	19
09038	19
09039	19
09049	19
09050	19
09052	19
09065	7
09067	21
09075	15
09084	33
09085	37
09089	9
09091	15
09092	15
09093	15
09102	21
09118	25
09122	17
09126	15
09128	15
09129	15
09143	17
09144	17
09156	15
09159	17
09161	31
09162	31
09170	25
09178	7
09179	31
09184	31
09191	7
09197	25
09205	15
09207	7
09208	15
09209	9
09210	15
09225	19
09561	45
09906	15
09917	45
09920	45
09927	45
09931	45
09932	45
09960	45
09961	45
09962	45
10211	15
10841	33
10882	101
11378	61
11379	61
11820	83
11931	39
11932	39
12028	19
12455	17
22066	125
26470	145
29979	115
40167	123
40394	73
40396	73
40397	
40401	
40405	
40441	
40742	
40756	
40758	
40760	
40797	
40145	
41049	
41409	
41508	
42250	
42255	
42257	
42431	
42590	
42699	
42705	
42707	
42708	
42709	
43023	
50052	
50139	
50216	
50235	
50303	
50315	
50320	
50323	
50421	
50453	
50472	
50499	
50524	
50525	
50527	
50528	
50552	
50637	
50647	
50682	
50702	
50703	
52015	
52124	
52171	
52177	
52182	
52189	
52246	
52278	
52485	
52615	
52710	
55636	
55638	
55697	
55705	
55713	
55714	
55715	
55775	

Page No.
19
19
19
7
21
15
33
37
9
15
15
15
21
25
17
15
15
15
17
17
15
17
31
31
25
7
31
31
7
25
15
7
15
9
15
19
45
15
45
45
45
45
45
45
45
45
15
33
101
61
61
83
39
39
19
17
125
145
115
123
73
73

Part No.	Page No.
40397	73
40401	73
40405	73
40441	33
40742	61
40756	61
40758	61
40760	61
40797	73
40145	61
41049	61
41409	125
41508	101
42250	73
42255	73
42257	73
42431	61
42590	39
42699	73
42705	73
42707	73
42708	73
42709	73
43023	63
50052	99
50139	61
50216	37
50235	89
50303	113
50315	107
50320	25
50323	113
50421	111
50453	69
50472	91
50499	111
50524	53
50525	19
50527	75
50528	39
50552	125
50637	125
50647	125
50682	73
50702	45
50703	45
52015	9
52124	7
52171	37
52177	7
52182	19
52189	19
52246	39
52278	19
52485	148
52615	7
52710	19
55636	39
55638	49
55697	49
55705	61
55713	69
55714	45
55715	45
55775	49

Part No.	Page No.
55778	37
56102	49
56140	37
56169	73
56375	33
56398	109
56666	97
56667	115
56854	47
57126	7
58192	95
58702	89
59053	9
59054	9
59059	11
59155	21
59720	39
59895	115
64355	139
66299	133
68087	107
68845	135
69310	143
69402	107
70620	87
70621	87
70884	133
70916	145
71082	39
71149	133
71164	117
71734	115
72001	93
72626	83
72627	115
72628	123
73037	141
73350	13
73352	57
73408	107
74133	143
75804	119
75805	119
76653	55
77626	57
77697	145
77698	145
77700	97
77704	131
77707	127
77784	131
77789	141
77808	99
77833	131
77845	135
77846	121
77861	129
77869	139
77887	129
78001	107
78006	125
78097	131
78114	99

Part No.	Page No.
78120	107
80603	33
91171	149
91256	149
91291	149
91341	149
91783	149
91812	149
91813	149
91814	149
91819	149
91857	149
91878	149
91879	149
91880	149
91957	149
98018	149
210203	49
210204	49
210205	49
210206	49
210211	37
210372	151
210419	25
210447	31
210517	23
210566	35
210572	35
210604	95
210640	23
210679	15
210691	95
210699	97
211064	25
211502	47
212023	23
212042	25
212098	11
212103	51
212104	25
212137	15
212160	17
212161	17
212173	23
212232	31
212233	31
212278	13
212308	19
212309	19
212328	17
212329	17
212330	17
212332	7
212333	11
212334	11
212339	15
212340	15
212341	15
212345	25
212350	17
212363	15
212364	15

Part No.	Page No.
212365	15
212366	9
212369	37
212375	19
212382	9
212383	9
212556	111
212557	111
212558	111
212702	11
212735	148
212835	81
212912	81
212913	81
212919	81
212921	81
212943	81
213172	33
213245	13
213251	15
213340	77
213358	33
213416	45
213417	45
213419	45
213472	31
213574	11
213600	15
213601	15
213602	15
213636	49
213637	49
213660	53
213661	53
213662	39
213663	53
213666	45
213695	25
213698	25
213700	53
213724	25
213744	21
213810	11
213811	11
213960	57
213966	23
214019	31
214047	19
214054	31
214058	21
214090	45
214131	15
214223	117
214228	31
214229	31
214231	31
214262	33
214278	33
214279	33
214348	17
214350	17
214351	17
214409	13
214649	77
214662	77

Part No.	Page No.
214684	77
214685	77
214789	25
214792	45
214793	53
214794	53
214787	53
214797	53
214840	37
214970	23
214971	23
215053	7
215072	95
215170	43
215172	87
215180	25
215191	25
215207	105
215211	105
215216	35
215242	77
215269	95
215270	89
215272	37
215275	37
215278	43
215301	143
215331	71
215390	77
215404	75
215488	7
215430	97
215494	39
215593	53
215594	41
215599	53
215647	25
215648	55
215755	11
215758	33
215759	83
215761	21
215762	15
215769	49
215802	23
215808	57
215809	93
215887	9
215935	9
215936	9
216160	53
216161	53
216322	23
216380	115
216421	59
216548	31
216627	13
216680	21
216708	83
216709	23
216773	125
216905	85
216909	85
216910	83
216911	85

cardiagn.com

Part No.	Page No.
216912	83
216913	83
216914	83
216915	83
216933	7
217214	53
217216	53
217224	95
217245	97
217253	97
217254	97
217259	97
217261	97
217268	69
217269	71
217270	71
217272	25
217273	107
217274	107
217282	69
217288	69
217289	69
217290	71
217315	77
217316	77
217317	79
217325	51
217333	71
217334	69
217349	73
217351	71
217352	71
217353	71
217354	71
217355	71
217360	63
217361	99
217365	77
217378	71
217387	45
217388	45
217389	47
217391	49
217396	113
217397	113
217398	69
217399	69
217400	65
217421	69
217422	71
217423	71
217437	107
217438	107
217445	57
217448	41
217453	69
217454	69
217455	69
217468	69
217469	69
217474	47
217476	47
217477	47
217478	41
217484	47

Part No.	Page No.
217488	47
217489	47
217490	47
217491	47
217507	61
217512	47
217521	57
217523	41
217525	41
217526	47
217536	93
217546	47
217564	47
217565	47
217568	47
217575	113
217577	113
217578	113
217584	57
217589	115
217608	105
217618	119
217620	41
217622	41
217623	41
217630	115
217636	85
217637	85
217638	85
217680	41
217694	77
217698	85
217701	85
217705	85
217735	55
217764	115
217767	35
217778	41
217780	35
217781	35
217811	45
217816	85
217817	101
217819	85
217828	101
217829	101
217843	41
217844	41
217846	9
217930	9
217931	9
217932	9
217936	15
217937	9
217938	9
217939	9
217943	9
217944	9
217945	9
217949	9
217950	9
217951	9
217955	9
217956	9
217957	9

Part No.	Page No.
217970	41
217973	41
217976	41
217978	41
217979	101
217982	101
217983	91
217984	91
217985	91
217986	101
217988	101
218014	85
218020	109
218021	109
218024	109
218025	101
218026	101
218051	101
218052	87
218068	85
218070	85
218072	101
218073	85
218149	81
218203	25
218243	47
218244	47
218259	41
218270	41
218294	103
218372	103
218378	103
218381	89
218382	89
218386	93
218387	93
218388	93
218391	93
218392	103
218398	103
218402	91
218407	91
218408	91
218409	91
218410	91
218414	93
218468	109
218469	109
218470	109
218471	109
218496	109
218507	148
218508	148
218509	148
218511	77
218552	75
218565	137
218566	105
218576	25
218579	115
218799	23
218828	23
218831	23
218835	21
218913	21

Part No.	Page No.
218954	31
218955	111
218969	81
218970	81
218971	81
218983	81
218984	81
219002	93
219005	93
219007	93
219010	93
219011	93
219012	93
219013	93
219017	93
219018	93
219019	93
219020	93
219021	93
219022	93
219023	93
219024	93
219025	81
219027	93
219028	93
219078	123
219098	71
219198	105
219213	101
219245	107
219466	47
219468	47
219469	47
219489	15
219499	31
219501	117
219504	15
219507	31
219509	103
219521	57
219527	87
219544	61
219547	61
219548	61
219549	61
219550	61
219571	83
219573	97
219574	97
219582	31
219620	81
219635	61
219648	125
219649	125
219654	115
219680	125
219681	125
219689	73
219690	73
219697	85
219698	148
219704	148
219709	59
219714	55
219717	55

Part No.	Page No.
219721	55
219722	55
219723	55
219725	49
219729	57
219797	55
219804	59
219813	83
219814	83
219816	83
219817	83
219818	83
219819	83
219822	83
219824	83
219825	83
219826	83
219827	83
219828	83
219829	85
219894	39
219895	39
219913	15
219914	15
219988	53
219995	41
230007	69
230021	41
230086	57
230140	41
230168	23
230169	23
230170	23
230171	23
230172	23
230173	23
230184	77
230204	103
230240	111
230259	23
230262	23
230268	23
230294	77
230295	77
230300	7
230304	37
230313	15
230328	107
230329	107
230359	109
230368	129
230438	61
230439	61
230440	61
230441	125
230492	25
230507	21
230508	19
230509	39
230511	69
230696	41
230721	97
230736	148
230741	93

Page No.
55
55
55
49
57
55
59
83
83
83
83
83
83
83
83
83
83
83
85
39
39
15
15
53
41
69
41
57
41
23
23
23
23
23
23
77
103
111
23
23
23
77
77
7
37
15
107
107
109
129
61
61
61
125
25
21
19
39
69
41
97
148
93

Part No.	Page No
230757	77
230758	77
230759	77
230760	77
230762	77
230858	69
230894	85
230895	85
230900	69
230996	13
231033	49
231046	11
231057	17
231071	53
231074	53
231075	53
231115	55
231116	55
231143	25
231144	13
231154	11
231155	11
231175	103
231181	69
231182	69
231183	77
231184	77
231188	109
231189	109
231190	109
231218	7
231219	7
231220	7
231221	7
231224	95
231241	61
231242	61
231261	31
231265	63
231266	63
231267	31
231272	63
231277	111
231289	31
231290	31
231291	31
231292	31
231299	77
231318	89
231319	89
231321	89
231345	61
231478	21
231479	21
231480	21
231494	113
231505	71
231515	111
231517	113
231531	111
231553	123
231557	103
231573	103
231574	101
231575	23

Part No.	Page No.
231576	23
231594	113
231601	99
231737	45
231759	37
231772	97
231774	125
231784	97
231842	21
231844	21
231848	21
231854	21
231879	37
231880	37
231881	37
231883	37
231884	37
231885	37
231888	37
231910	115
231911	115
231918	69
231942	53
231943	53
231947	33
231952	97
231995	97
232053	99
232074	81
232077	81
232078	81
232088	97
232089	97
232095	117
232096	117
232097	117
232098	81
232107	81
232122	99
232123	99
232165	91
232171	91
232174	73
232361	93
232404	37
232413	69
232415	47
232417	69
232451	113
232454	21
232464	57
232470	61
232497	41
232539	99
232548	99
232550	99
232557	63
232565	47
232566	115
232570	115
232590	115
232604	39
232606	39
232608	55
232625	95

Part No.	Page No.
232627	39
232635	113
232647	39
232651	113
232669	51
232674	123
232682	99
232693	77
232745	53
232811	61
232813	57
232846	41
232852	119
232867	47
232898	39
232930	39
232944	57
232992	113
233017	117
233041	99
233042	99
233072	15
233170	25
233175	69
233199	61
233241	51
233243	125
233244	125
233245	125
233247	125
233248	51
233261	148
233283	148
233310	121
233379	39
233380	39
233397	57
233398	57
233406	57
233407	57
233408	57
233409	57
233410	57
233414	57
233416	57
233419	11
233427	15
233430	11
233436	57
233437	57
233438	57
233440	25
233441	57
233442	57
233446	41
233448	51
233449	57
233450	57
233460	21
233463	123
233464	51
233465	51
233466	51
233468	51
233473	61

Part No	Page No.
233520	23
233531	125
233533	125
233551	7
233552	33
233568	25
233573	95
233574	95
233607	7
233608	7
233618	105
233619	105
233625	95
233629	95
233630	95
233638	117
233640	97
233642	97
233677	61
233678	61
233770	125
233771	125
233802	25
234027	61
234089	23
234091	23
234117	125
234212	121
234213	121
234252	57
234291	19
234296	19
234309	111
234310	19
234312	19
234365	119
234401	115
234523	125
234524	51
234525	51
234532	63
234534	51
234536	115
234537	115
234563	115
234565	65
234603	21
234612	43
234613	13
234619	148
234628	103
234630	103
234632	103
234633	103
234634	103
234635	103
234636	103
234641	43
234643	43
234658	57
234668	105
234672	105
234734	97
234749	39
234816	11
234817	11

Part No	Page No
234824	143
234829	143
234835	47
234922	115
234995	115
234996	115
234997	115
235006	85
235008	85
235009	85
235010	85
235083	19
235232	119
235278	83
235294	85
235416	57
235438	47
235455	41
235552	35
235553	123
235556	115
235569	83
235570	25
235592	61
235634	107
235649	103
235663	119
235664	119
235665	119
235666	119
235682	109
235716	125
235720	7
235730	95
235731	95
235968	69
235985	47
236003	21
236011	21
236018	21
236042	123
236043	123
236060	23
236070	69
236072	61
236074	47
236090	37
236102	119
236136	123
236137	123
236138	125
236139	123
236141	123
236151	17
236173	11
236174	11
236175	11
236176	11
236178	11
236179	11
236180	11
236181	11
236183	11

cardiagn.com

Part No.	Page No.
236184	11
236185	11
236186	11
236188	11
236189	11
236191	7
236281	39
236282	39
236305	47
236356	105
236360	35
236365	125
236366	125
236393	125
236398	67
236406	23
236407	23
236408	23
236414	39
236415	37
236417	47
236421	123
236435	21
236527	113
236528	113
236534	69
236535	69
236541	51
236545	41
236546	61
236547	61
236548	51
236615	99
236628	41
236630	47
236632	61
236805	95
236891	109
236894	109
236895	109
236896	109
236922	23
236923	63
236988	7
236993	81
236995	81
237037	101
237041	119
237119	11
237138	69
237139	7
237141	129
237142	9
237144	75
237150	25
237158	97
237159	21
237160	49
237161	11
237163	105
237178	123
237179	61
237194	95
237236	69
237237	69
237238	69
237239	69
237240	69
237243	123
237272	9
237327	101
237329	35
237333	35
237339	71
237341	63
237345	11
237423	55
237435	123
237540	115
237563	23
237637	49
237773	27
237774	29
237896	119
237912	51
237926	9
237928	9
237929	9
237990	65
237991	65
238018	115
238019	115
238020	115
238027	115
238028	115
238029	115
238031	115
238032	123
238339	45
238542	81
238799	95
238983	35
239016	117
239089	17
239160	45
239192	39
239422	71
239544	17
239545	17
239546	17
239547	17
239645	47
239656	99
239705	45
239706	45
239718	97
239742	99
239773	73
239925	55
239926	55
239927	55
239928	55
240102	123
240111	112
240112	99
240136	87
240137	87
240138	33
240185	77
240186	77
240187	79
240191	101
240234	109
240235	109
240236	109
240255	95
240270	35
240271	35
240377	99
240404	37
240418	99
240485	45
240526	23
240689	29
240789	21
240797	97
241037	97
241038	97
241110	39
241221	109
241222	109
241223	109
241224	109
241225	109
241226	109
241388	77
241649	45
241650	45
241651	45
241814	123
241839	43
241884	25
242117	81
242133	89
242180	77
242259	73
242294	73
242295	73
242302	73
242303	73
242467	93
242491	119
242522	63
242576	11
242577	11
242579	11
242672	35
242686	51
242742	69
242958	33
242988	21
242993	37
242996	37
243225	87
243237	7
243287	81
243288	81
243373	107
243394	27
243419	7
243471	99
243507	123
243508	125
243531	11
243920	27
244128	119
244337	63
244700	119
244706	33
244718	33
245227	73
245228	73
245766	45
245767	45
246340	13
246346	11
248091	103
250431	99
250510	15
250517	25
250530	21
250531	21
250532	19
250539	95
250542	35
250564	99
250573	39
251320	77
251321	37
251322	95
251323	93
251324	97
251600	19
251601	57
251618	73
260029	33
260031	73
260039	119
260046	33
260055	33
260059	119
260070	33
260073	33
260092	33
260133	45
260138	27
260139	27
260140	27
260141	27
260142	27
260143	27
260146	27
260148	27
260152	27
260155	27
260159	27
260163	27
260164	29
260165	29
260166	29
260167	29
260168	29
260169	29
260170	29
260173	27
260175	29
260179	29
260180	29
260181	29
260263	29
260269	29
260274	29
260275	29
260550	109
260567	111
260583	109
260585	111
260681	149
260682	119
260700	27
260702	27
260704	27
260707	27
260708	27
260714	29
260719	29
260721	29
260732	27
260734	27
260737	27
260739	27
260743	29
260745	29
260747	29
260749	29
260751	29
260752	29
260753	29
260754	27
260765	27
260767	27
260771	29
260819	85
260820	85
261236	33
261238	35
261240	33
261241	33
261242	33
261244	33
261252	121
261253	121
261410	27
261412	113
261413	113
261414	113
261415	
261417	
261418	
261419	
261420	
261422	
261423	
261426	
261428	
261430	
261434	
261483	
261489	
261499	
261500	
261501	
261502	
261503	
261504	
261505	
261506	
261508	
261509	
261511	
261512	
261513	
261562	
261563	
261564	
261570	
261577	
261580	
261581	
261582	
261583	
261584	
261594	
261618	
261619	
261625	
261638	
261640	
261641	
261791	
261792	
261793	
261794	
261836	
261837	
261846	
261887	
261902	
261906	
261909	
261919	
261921	
261940	
261941	
261943	
261969	
261995	
262051	
262065	
262066	
262068	
262069	
262072	

Page No.	Part No.	Page No.	Part No.	Page No.	Part No.	Page No.	Part No.	Page No.	Part No.	Page No.
27	261415	109	262079	149	262663	7	300566	143	301139	131
27	261417	109	262085	35	262796	33	300573	127	301141	139
27	261418	109	262090	69	262859	123	300583	143	301147	133
27	261419	109	262091	149	262860	35	300588	137	301148	143
29	261420	27	262100	119	262861	33	300630	139	301153	131
29	261422	73	262101	119	262922	115	300631	139	301157	141
29	261423	73	262103	33	262923	115	300659	127	301158	141
29	261426	73	262153	73	262924	115	300660	127	301159	141
29	261428	63	262215	137	262926	33	300661	127	301160	141
29	261430	95	262268	119	262929	35	300674	129	301161	141
29	261434	73	262269	119	262969	33	300690	145	301162	141
27	261483	35	262278	109	263142	99	300691	147	301174	131
29	261489	33	262286	109	263354	95	300693	145	301207	135
29	261499	119	262287	111	263455	43	300713	75	301208	135
29	261500	119	262288	111	263456	43	300715	75	301209	135
29	261501	119	262289	111	263607	25	300716	75	301217	131
	261502	123	262290	111	263630	25	300734	145	301253	143
	261503	123	262292	111	263670	25	300742	145	301261	131
29	261504	123	262293	111	263732	123	300743	145	301267	127
29	261505	33	262294	111	264039	81	300754	127	301282	143
29	261506	33	262295	111	264040	81	300764	127	301283	73
29	261508	27	262296	111	264137	15	300765	129	301285	141
109	261509	109	262297	111	264639	39	300766	147	301286	141
111	261511	125	262298	111	264807	53	300781	127	301287	141
109	261512	148	262299	111	265047	23	300782	137	301288	141
111	261513	148	262300	111	265258	45	300783	127	301328	129
149	261562	27	262301	111	265331	15	300784	127	301346	143
119	261563	29	262302	111	265444	7	300789	133	301437	125
27	261564	29	262303	111	266687	81	300794	143	301389	143
27	261570	27	262304	109	266900	19	300809	145	301393	147
27	261577	149	262305	111	266750	69	300810	137	301403	143
27	261580	27	262306	111	266924	11	300814	133	301407	139
27	261581	27	262307	111			300815	133	301409	139
29	261582	27	262308	111			300816	97	301411	139
29	261583	27	262309	111	267572	45	300824	107	301415	139
29	261584	27	262310	111	267573	45	300825	127	301416	137
27	261594	27	262311	111	267574	45	300827	143	301418	137
27	261618	143	262312	29	267575	45	300831	145	301419	137
27	261619	73	262313	27	267779	21	300834	147	301420	137
27	261625	95	262341	95	267781	13	300837	129	301421	137
29	261638	121	262342	119	267794	47	300838	137	301422	137
29	261640	121	262343	119	267795	43	300844	145	301432	137
29	261641	121	262398	95	267829	19	300845	131	301437	133
	261791	119	262399	95	267837	109	300849	131	301502	139
	261792	119	262400	95	267981	23	300850	131	301503	131
29	261793	119	262401	95	268374	109	300851	131	301870	137
29	261794	119	262402	95	268598	25	300881	133	301871	133
29	261836	123	262403	95	268674	111	300901	143	301872	143
29	261837	123	262404	95	268791	47	300914	133	301875	131
27	261846	33	262405	95	269125	15	300916	139	301876	133
27	261887	149	262406	95	269413	39	300917	139	301893	139
27	261902	149	262407	95	269854	7	300918	143	301922	143
29	261906	145	262408	95	270167	123	300919	137	301930	129
85	261909	149	262409	95	270287	69	300924	129	301957	131
85	261919	121	262410	95	270522	95	300948	135	301963	127
33	261921	37	262411	95	270741	95	300969	137	301964	127
35	261940	119	262441	33	271614	35	300970	137	301966	133
33	261941	119	262448	27	272094	73	300975	139	301967	139
33	261943	119	262468	63	272244	145	300984	141	301975	133
33	261969	115	262469	63	272789	25	301075	131	301976	133
33	261995	119	262631	119	273935	115	301091	143	301985	129
121	262051	119	262632	119	274323	109	301092	147	301988	131
121	262065	95	262635	119	275376	111	301096	141	301997	133
27	262066	95	262636	123	275744	81	301097	141	302032	137
113	262068	113	262647	29	277311	71	301109	129	302034	137
113	262069	149	262658	145	278524	85	301124	135	302180	133
113	262072	149	262659	27	279880	145	301131	127	302181	133

cardiagn.com

Part No.	Page No.	Part No.	Page No.	Part No.	Page No.	Part No.	Page No.	Part No.	Page No.
302222	127								
302230	127								
302240	137								
302298	121								
302300	143								
302303	137								
302325	145								
302326	145								
302327	137								
302328	137								
302334	137								
302335	137								
302337	145								
302338	145								
302361	107								
302363	135								
302379	127								
302380	127								
302381	127								
302382	127								
302383	127								
302460	131								
302463	135								
302534	143								
302541	139								
302544	139								
302550	135								
302551	135								
302552	135								
302554	139								
302555	139								
302560	141								
302561	141								
302567	107								
302575	75								
302576	127								
302580	129								
302581	129								
302584	143								
302595	137								
302596	137								
302599	133								
302601	133								
302609	133								
302611	133								
302615	133								
302619	141								
302628	141								
302635	147								
304020	141								
304035	127								
304096	139								
304100	141								
304101	141								
304104	141								
304351	135								
304601	127								
304906	107								
305229	127								
305273	127								
306465	107								
307220	143								
307975	139								
307976	139								
311785	129								
312027	133								

carnagin.com

LAND-ROVER

SECTION III

EXTRA EQUIPMENT

(APPLICABLE TO ALL MODELS)

and

SPECIAL VEHICLES

cardiagn.com

cardiagn.com

INDEX TO SECTIONS

Description	Page
C	
Cab—Export only	16–19
E	
Engine governor	34–37
F	
Fire Tender	67–77
Front capstan winch	42–47
H	
Hard top and tropical roof—Export only	10–15
Hood and fittings	6– 9
M	
Miscellaneous extras	62–65
N	
Numerical index	88–91
O	
Oil cooler	48–51
R	
Rear and centre P. T.O. drive section gearbox units	22–25
Rear capstan winch	40–41
Rear P T.O. drive section	26–29
Rear P. T.O. pulley section	30–33
Rear seats—Export only	56–57
S	
Speed limiter, engine governor	38–39
T	
Towing attachments	60–61
Trailer, axle, brakes and hubs	82–83
Trailer, body, springs and road wheels	84–87
Trailer, draw bar and hand brake	78–81
U	
Universal joint cover plates	58–59
V	
Vehicle heater	52–53
W	
Water temperature and oil pressure gauge	58–59
Windscreen ventilator	54–55

cardiagn.com

INDEX

A	Description	Page
Adaptor P T.O.		29
Axle trailer		83

B		
Back light, cab		19
Back light, hard top		15
Back light hood		7
Back rest rear seat		57
Body trailer		85
Bollard and shaft front winch		43
Bollard and shaft, rear winch		41
Brace wheel divided rim wheel		65
Brake adjuster trailer		81
Brake lever hand trailer		79
Brake shoe trailer		83

C		
Cab		17
Canvas cover trailer		87
Canvas partition, hood		9
Capstan winch front		43
Capstan winch rear		41
Cap radiator, 15 lbs		62
Chaff guard		62
Chains skid		64
Control quadrant, engine governor		35
'Cool-ride' pad seats		65
Cooler oil		49

C	Description	Page
Cover plate, universal joint		59
Cylinder liner		65
Cushion seat rear		57

E		
Engine governor		35

F		
Fan belt, engine governor		35
Filler cap radiator, 15 lbs.		62
Fire Tender		67
Flange, P T O. drive		23
Flag staff		65
Foam generator—Fire Tender		125

G		
Gasket set decarbonising		65
Gearbox, overdrive—Fire Tender		73
Glass rear, cab		19
Glass rear, hard top		15
Glass, side hard top		13
Governor engine		35
Governor quadrant		35

H		
Handle hard top rear lid		13
Hand brake lever, trailer		79
Hard top		11

carmagnet.com

H	Description	Page
Heater, vehicle		53
Heavy duty road springs		62
Hood, driver's		9
Hood, full length		7
Hood stick		9
Housing capstan winch, front		43
Housing, capstan winch, rear		41
Housing, P.T.O. gearbox drive		23
Housing, P.T.O pinion		31
Housing, rear P.T.O		27
Housing, winch shaft, front winch		45
Hub, trailer		83

L	
Liner, cylinder	65
Lock, hard top, rear lid	13

M	
Mat, floor	65

O	
Oil cooler	49
Oil pressure gauge	59
Oil pump, oil cooler	51
Overdrive gearbox—Fire Tender	73

P	
Panel, rear, cab	17
Partition, canvas, hood	9
Pedal pads	62
Plate, support, front winch	45
Plate, tow	61
Propeller shaft, P.T.O.	27
P.T.O centre	23
P.T.O gearbox drive housing	23
P.T.O housing, rear	27
P.T.O. pinion housing	31

P	Description	Page
Pulley, P.T.O		33
Pump—Fire Tender		69

Q	
Quadrant, governor control	35
Quadrant, hard top	15
Quick Service parts	63

R	
Radiator cap, 15 lbs.	62
Radio suppressors	65
Radio set	63
Rear curtain	9
Rear lid, hard top	13
Rear panel, cab	17
Rear seats	57
Release valve, oil cooler	49
Road springs, heavy duty	62
Road spring, trailer	85
Road wheel, trailer	87
Roof, cab	17
Roof, hard top	11
Roof, tropical, hard top	15
Roof, tropical, cab	19
Rope, hood	9
Rope bracket, front winch	47
Rubber pedal pads	62
Rubber seal, cab	17
Rubber seal, hard top	11
Rubber tube, bleeding brakes	65

S	
Seal rubber, cab	17
Seal rubber, hard top	11
Seat pad, 'cool-ride'	65
Seat, rear	57

cardiagn.com

S	Description	Page
Shaft, output, P.T.O.		27
Shoe brake, trailer		83
Side panel hard top		11
Skid chains		64
Spring road trailer		85
Spiral bevel gears P.T.O., pulley		31
Speedometer 1/10ths mile		65
Strap hood		7
Stop lamp trailer		87
Sump conversion kit		64
Support foot		65
Support plate, front winch		45
Support spare wheel		63
Suppressors, radio		65
Switch, trafficator		62

T		
Towing jaw		61
Tow plate		61
Trafficator		62
Tyre 7.00" x 16"		62

U	Description	Page
Universal joint cover plates		59

V		
Vehicle heater		53
Ventilator windscreen		55

W		
Water temperature gauge		59
Wheel brace divided rim wheels		65
Wheel support spare		63
Winch, capstan, front		43
Winch capstan rear		41
Windscreen, ventilator		55
Winch shaft housing, front winch		45
Worm wheel front winch		43
Worm wheel, rear winch		41
Wrench for capstan winch		65

cardiagn.com

Page

59

53

55

59

65

63

43

41

55

45

43

41

65

cardiagn.com

HOOD AND FITTINGS

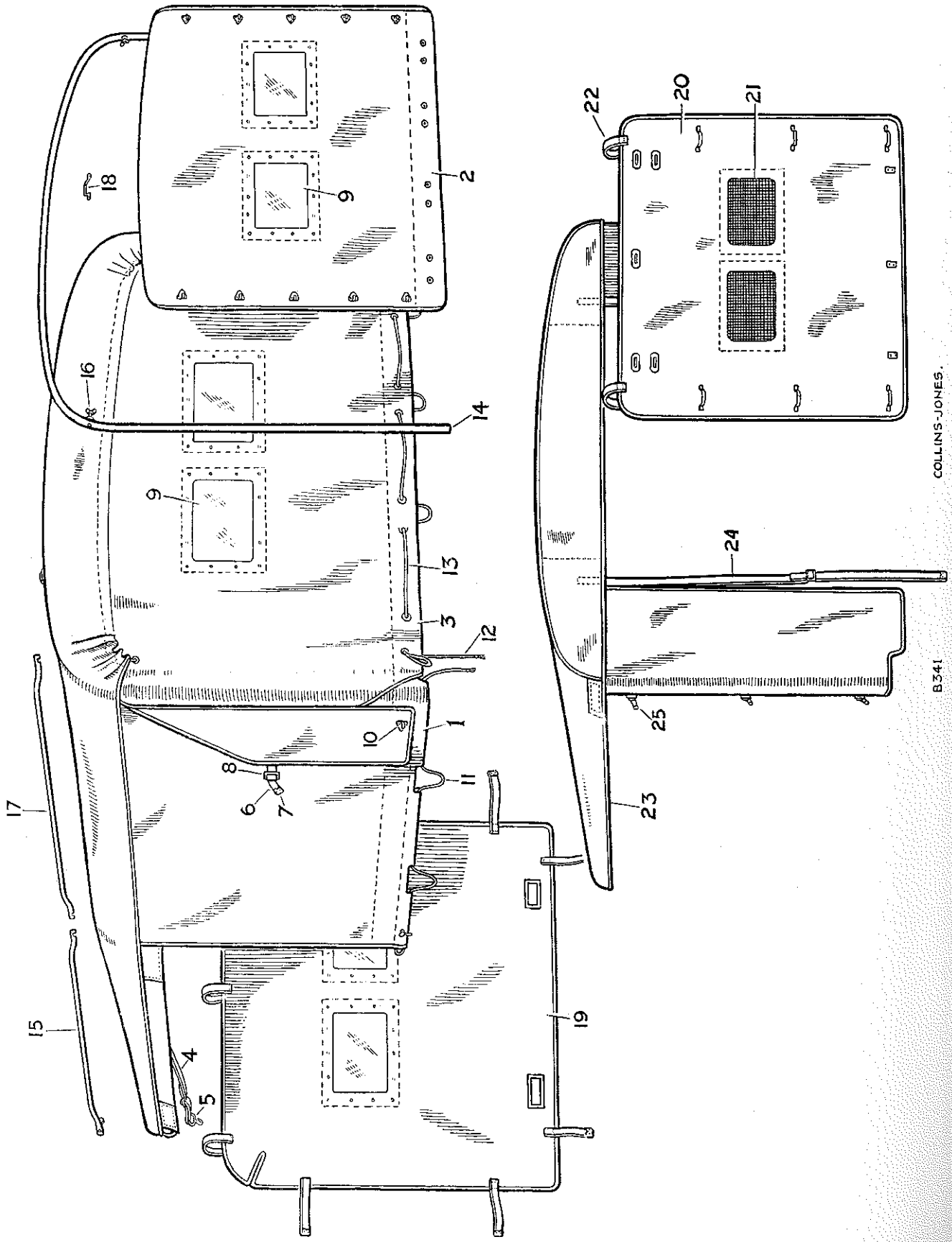

HOOD AND FITTINGS

PLATE REF.	1 2 3 4 DESCRIPTION	Qty.	Part No.	REMARKS
	HOOD COMPLETE ASSEMBLY, FULL LENGTH	1	261968	Vehicles numbered 860001 to 8666000. Comprises hood 301890 and necessary body fixings
	Strap complete, hood to screen	9	301013	Vehicles numbered 860001 to 8666000. Original strap-fixing type hood; for component parts of rope-fixing type hood see Part No. 301890 below
	Strap complete, hood support, front	2	301007	
	Strap complete, curtain to hood stick	2	301133	
	Strap complete, curtain to body	4	300951	
	Strap complete, balance to body	2	301134	
	Quick release fastener, male	6	301279	
	Quick release fastener, female	6	301280	
	Strap complete, hood support, rear ...	2	301135	
1	HOOD COMPLETE, FULL LENGTH ..	1	301890	Vehicles numbered 8666001 onwards
	HOOD COMPLETE, FULL LENGTH, WITH SIDE WINDOWS	1	304087	Export only
2	Rear curtain complete	1	301925	Vehicles numbered 8666001 to 06105462, 8680001 to 06300027
3	Rear curtain complete	1	262206	Vehicles numbered 06105463 and 06300028 onwards
4	Strap complete, hood support, front	1	301309	
	Buckle (For hood support strap)	2	300953	
5	Hook (For hood support strap)	2	301005	
	End cap (For hood support strap)	2	300954	
	Eyelet for end cap (For hood support strap)	4	300785	
	Strap complete, rear curtain to body	2	301317	
	Buckle (For rear curtain to body strap)	2	300953	
	End cap (For rear curtain to body strap)	2	300954	
	Eyelet for end cap (For rear curtain to body strap)	4	300785	
	Strap complete, retaining rear curtain	2	301332	
	End cap (For rear curtain retaining strap)	2	300954	
	Eyelet for end cap (For rear curtain retaining strap)	4	300785	
	Buckle for rear curtain retaining strap	2	300953	
6	Strap complete, for extension flap	2	301332	
7	End cap (For extension flap strap)	2	300954	Vehicles numbered 8666001 onwards
	Eyelet for end cap (For extension flap strap)	4	300785	
8	Buckle for extension flap strap	2	300953	
	Strap complete for side curtain	2	301883	
	Buckle (For side curtain strap)	2	300953	
	End cap (For side curtain strap)	2	300954	
	Eyelet for end cap (For side curtain strap)	4	300785	
9	Back light ..	2	301318	
	Bifurcated rivet (For back light, Alternative fixing)	28	311376	
	Boss cap (For back light, Alternative fixing)	28	27341	
	Frame for back light (For back light, Alternative fixing)	4	302434	
	Sail eyelet	36	301320	
	Ring for eyelet	36	301321	
	SIDE LIGHT ASSEMBLY FOR HOOD	1	262779	Export only
	Frame for side light	8	302434	
	Side light	4	301318	
	Reinforcement (For side light)	2	304088	
	Binding (For side light)	2	304089	
	Strap for side light	2	305161	
	Buckle	2	300953	
	End cap	2	300954	
	Eyelet	4	300785	
	Sail eyelet	8	301320	
	Ring for sail eyelet	8	301321	

cardiagn.com

HOOD AND FITTINGS

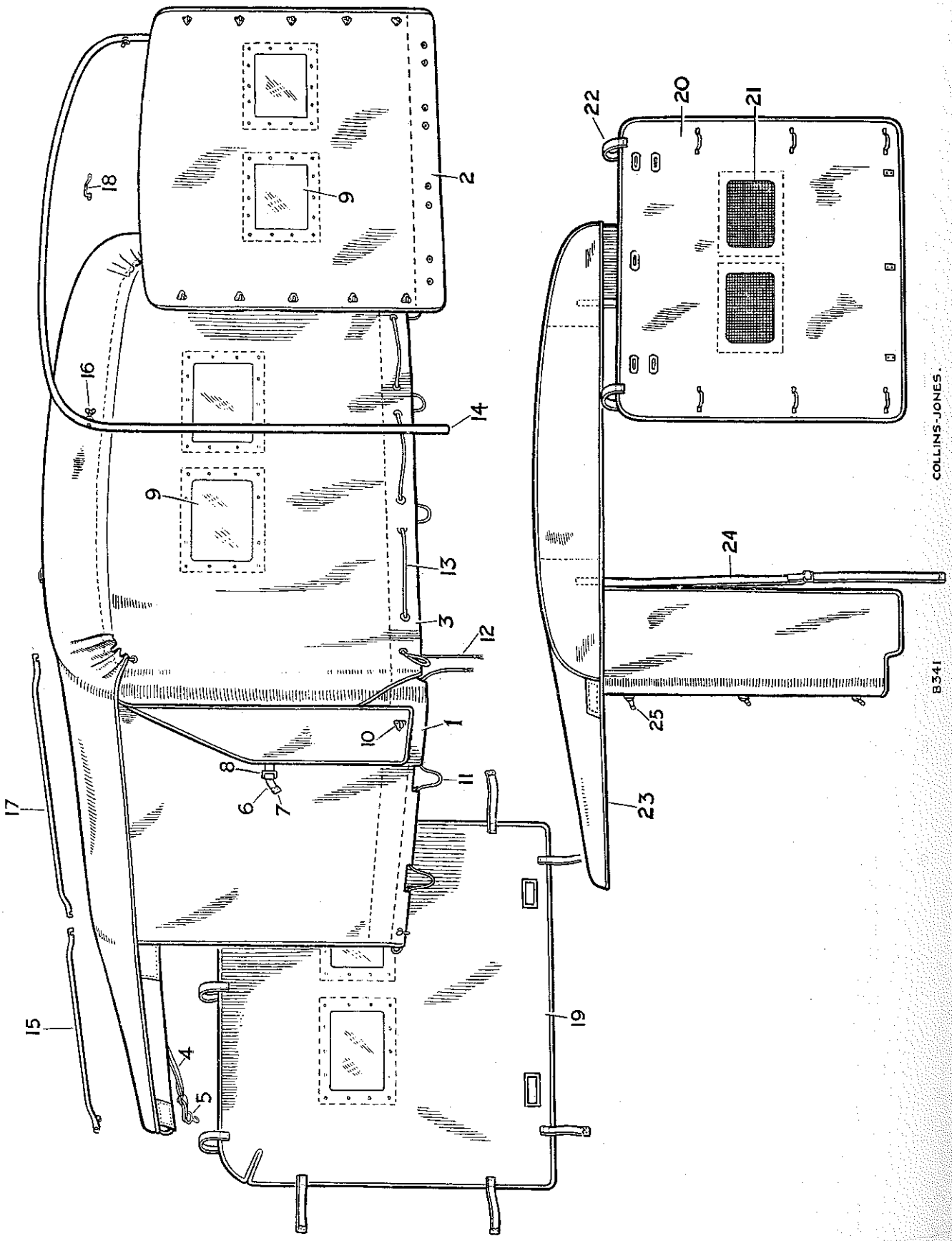

PLAT. REF.
10
11
12
13
14
15
16
17
18
19
20
21
22
23
24
25

cardiagn.com

HOOD AND FITTINGS

PLATE REF.	1 2 3 4 DESCRIPTION	Qty.	Part No.	REMARKS
10	Rope hook for curtain side	10	301342	Vehicles numbered 8666001 onwards
	Washer plate for rope hook	10	301343	
	Rivet fixing rope hook	30	3547	
11	Rope complete for side curtain, lower edge	2	301330	Vehicles numbered 8666001 onwards
	Hook for side curtain rope	2	301331	
12	Rope complete for hood top and side curtain	1	301324	
	Rope complete for rear curtain, 56" long	1	301323	Alternative types
13	Rope for rear curtain, 99" long	1	304001	
	Rope for rear curtain sides	2	301330	Vehicles numbered 8666001 to 16105462
14	Hood stick complete, cambered top	2	301892	
15	Front tie tube complete L.H. For hood stick	1	301120	
	Front tie tube complete R.H. For hood stick	1	301119	
16	Wing nut for hood stick and tie tubes	6	301074	
17	Tie tube for rear hood	2	301077	
18	Staple for rear support strap	2	300924	
	Drive screw fixing staples to hood stick	4	72626	
19	Canvas partition, behind driver	1	261826	
20	REAR CURTAIN ASSEMBLY FOR HOODS	1	301027	Vehicles numbered 860001 to 8666000
21	Gauze for back light	1	300961	
22	Strap complete, curtain to hood stick	2	301136	
	HOOD COMPLETE ASSEMBLY, DRIVER'S	1	304198	
23	HOOD COMPLETE, DRIVER'S	1	301035	
	Strap complete, hood to screen	9	301013	
	Strap complete, hood support front	2	301007	
	Strap complete, curtain to hood stick	2	301133	
	Strap complete, curtain to body	2	300951	
24	Strap complete, valance to body	2	301134	
25	Quick release fastener, male	6	301279	
	Quick release fastener, female	6	301280	
	Rear curtain complete	1	301027	
	Gauze for back light	1	300961	
	Strap complete, curtain to hood stick	2	301136	
	Strap, with buckle For roll-up side curtains	4	306861	Extra Equipment
	Strap, tab end For roll-up side curtains	4	306862	

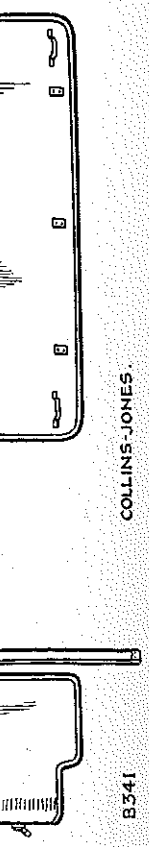

cardiagn.com

HARD TOP AND TROPICAL ROOF

EXPORT ONLY

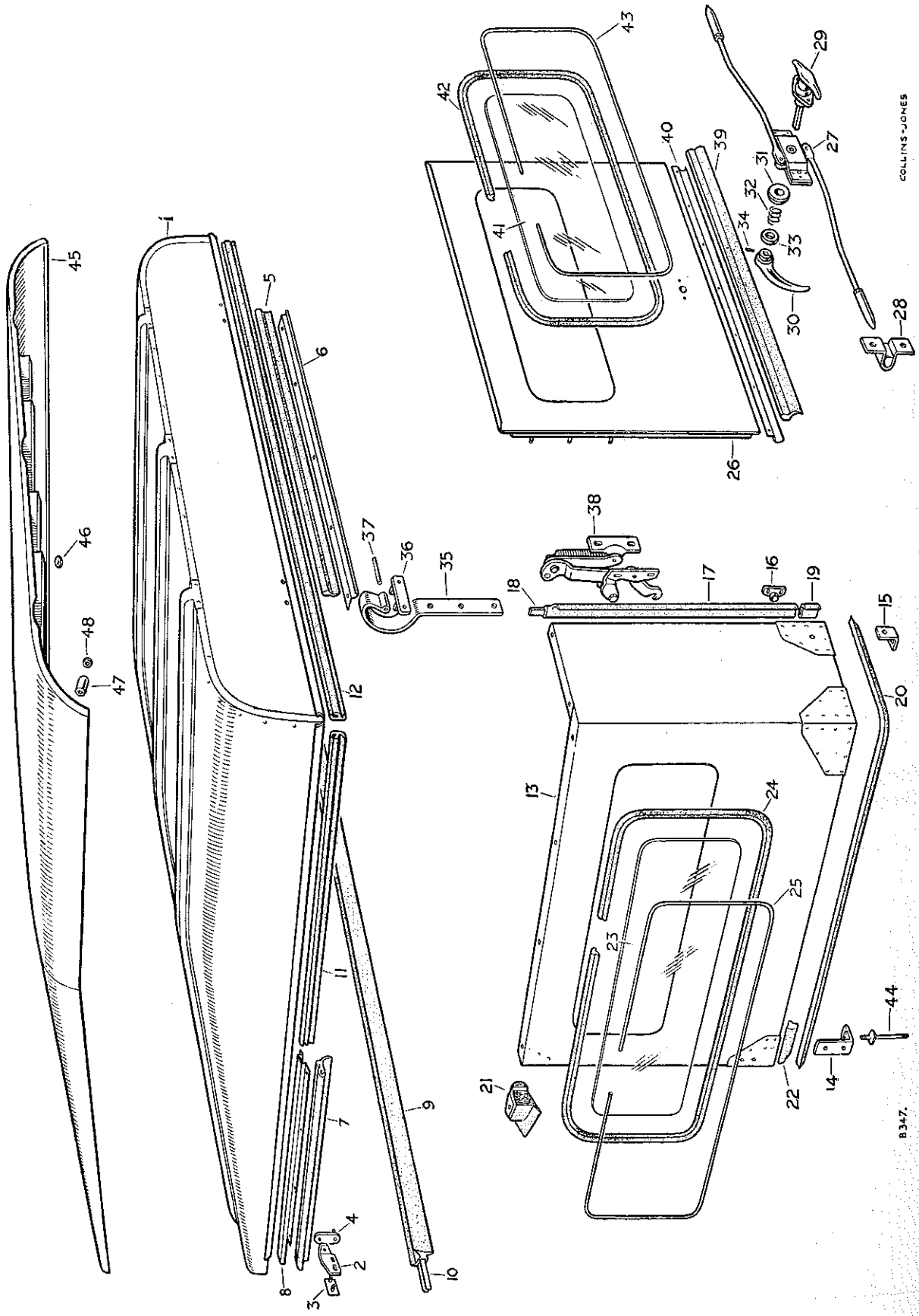

HARD TOP AND TROPICAL ROOF

EXPORT ONLY

PLATE REF.	1 2 3 4	DESCRIPTION	Qty.	Part No.	REMARKS
		HARD TOP COMPLETE ASSEMBLY, PLAIN SIDES	1	234440	
		HARD TOP COMPLETE ASSEMBLY, WITH SIDE WINDOWS	1	234441	
1		ROOF ASSEMBLY	1	302208	
		Adjustment bracket R.H. } Canopy to	1	302068	
2		Adjustment bracket L.H. } screen	1	302069	
3		Stop plate } Fixing adjustment brackets	2	302070	
		Plain washer	4	3830	
		Spring washer	4	3075	
		Nut ($\frac{5}{16}$")	4	3490	
4		Adjustable link	2	302072	
		Bolt ($\frac{5}{16}$" x $\frac{11}{16}$" long) } Fixing link to adjustment bracket	2	237158	
		Plain washer	2	3830	
		Spring washer	2	3075	
		Nut ($\frac{5}{16}$")	2	3490	
		Plain washer } On link for fixing canopy to screen	2	3830	
		Spring washer	2	3075	
		Nut ($\frac{5}{16}$")	2	3490	
5		Rubber seal for rear lid, top	1	302127	
6		Retaining strip for rear seal	1	302154	
		Screw ($\frac{1}{4}$" x $\frac{1}{2}$" long) } Fixing strip to door	5	78003	
		Plain washer	5	3840	
		Spring washer	5	3075	
		Nut ($\frac{1}{4}$")	5	3819	
7		Rubber seal for door	2	302128	
		Retaining strip R.H. } For door seal	1	302131	
8		Retaining strip L.H.	1	302132	
		Screw ($\frac{1}{4}$" x $\frac{1}{2}$" long) } Fixing strip to roof	8	78003	
		Spring washer	8	3074	
		Nut ($\frac{1}{4}$")	8	3819	
9		Rubber seal for canopy	1	302125	
10		Stiffening strip for canopy seal	1	302130	
		Drive screw fixing strip	2	77932	
11		Rubber seal, roof to side	2	302124	
12		Rubber seal, roof to back	1	302123	
		Bolt ($\frac{5}{16}$" x $\frac{29}{32}$" long) } Fixing roof at sides and rear	4	231647	
		Bolt ($\frac{5}{16}$" x $\frac{11}{16}$" long)	8	237158	
		Plain washer	24	3899	
		Spring washer	12	3075	
		Nut ($\frac{5}{16}$")	12	3490	
		SIDE PANEL ASSEMBLY R.H. } PLAIN SIDES	1	302213	
		SIDE PANEL ASSEMBLY L.H.	1	302214	
		SIDE PANEL ASSEMBLY R.H. } WITH SIDE WINDOWS	1	302215	
13		SIDE PANEL ASSEMBLY L.H.	1	302216	
14		Mounting bracket, front	2	302115	
15		Mounting bracket, rear	2	302093	
		Bolt ($\frac{5}{16}$" x 1" long) } Fixing mounting brackets to body sides	8	237160	
		Plain washer	8	3830	
		Spring washer	8	3075	
		Nut ($\frac{5}{16}$")	8	3490	
16		Socket for rear lid lock bolt	2	302167	

cardiagn.com

HARD TOP AND TROPICAL ROOF

EXPORT ONLY

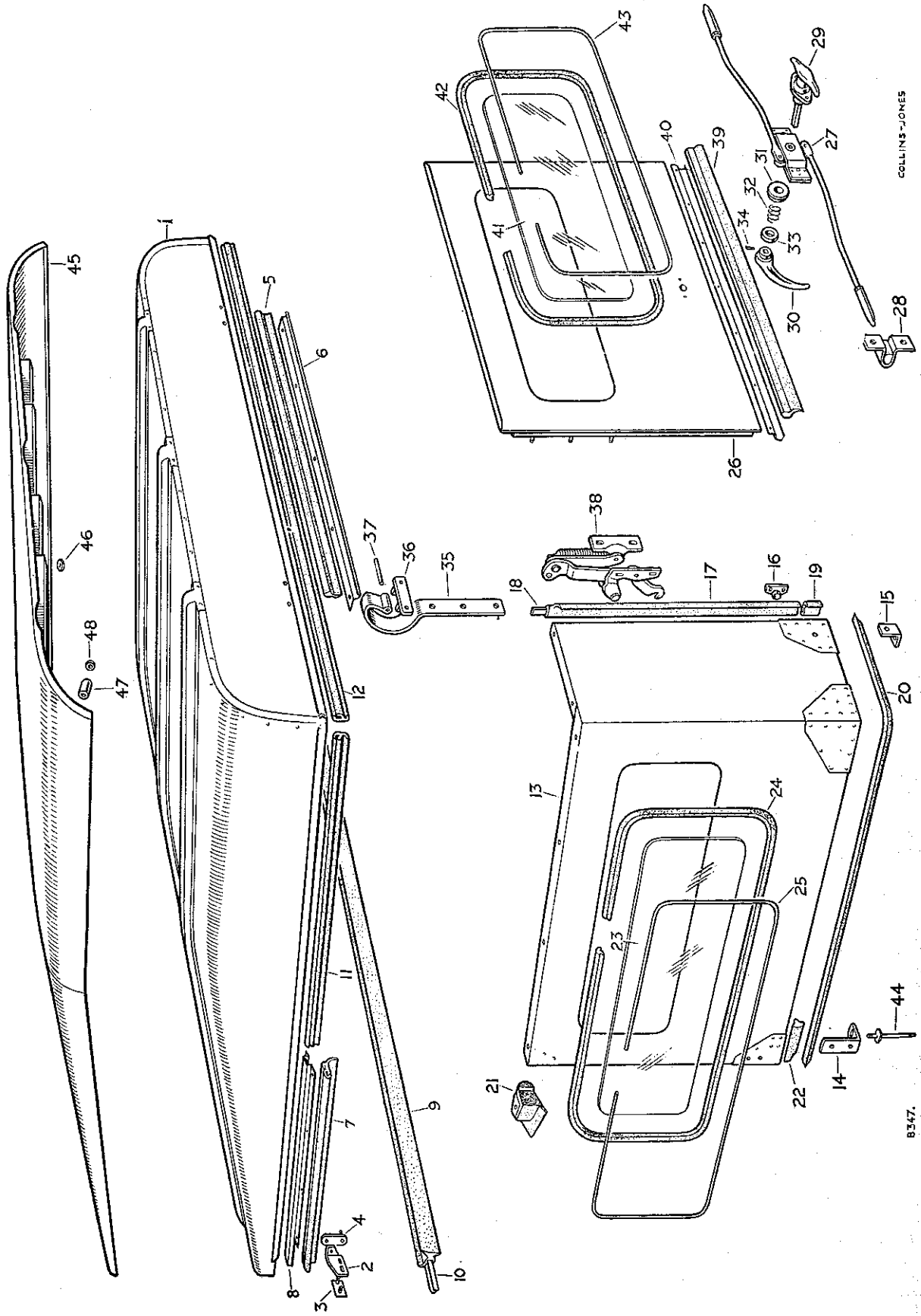

PLATE REF.

17
18
19
20
21
22
23
24
25
26
27
28
29
30
31
32
33
34
35
36
37

cardiagn.com

HARD TOP AND TROPICAL ROOF

EXPORT ONLY

PLATE REF.	1 2 3 4 DESCRIPTION	Qty.	Part No.	REMARKS
	Bolt ($\frac{1}{4}$" x $\frac{3}{4}$" long) } Fixing socket	4	237141	
	Plain washer } Fixing socket	4	3840	
	Spring washer } Fixing socket	4	3074	
	Nut ($\frac{1}{4}$") } Fixing socket	4	3819	
17	Rubber sealing strip for rear lid, side	2	302126	
18	Reinforcing strip for rear lid seal	2	302155	
	Drive screw fixing strips	10	78002	
19	Rubber buffer for rear lid side	2	302157	
20	Rubber sealing strip, lower edge to body	2	302129	
	DRAUGHT PAD ASSEMBLY R.H.	1	302259	
21	DRAUGHT PAD ASSEMBLY L.H.	1	302260	
	Rubber corner pad R.H.	1	302254	
	Rubber corner pad L.H.	1	302255	
	Washer plate } Fixing pad	2	302258	
	Bifurcated rivet } Fixing pad	2	311597	
	Screw (2 B.A. x $\frac{5}{8}$" long) } Fixing draught pad to side panel	2	77758	
	Spring washer } Fixing draught pad to side panel	2	3073	
	Nut (2 B.A.) } Fixing draught pad to side panel	2	3823	
22	Rubber draught filler piece for corner	2	302223	
23	Glass for side window	2	302174	
24	Weather strip for glass	2	302177	
25	Filler strip for weather strip	2	302178	
26	REAR LID ASSEMBLY	1	306532	
27	Lock complete for rear lid	1	302164	
	Bolt end for lock	2	262798	
	Screw (2 B.A. x $\frac{1}{2}$" long) } Fixing lock to rear lid	4	77700	
	Plain washer } Fixing lock to rear lid	4	3816	
	Spring washer } Fixing lock to rear lid	4	3073	
	Nut (2 B.A.) } Fixing lock to rear lid	4	3823	
28	Guide for rear lid lock	2	302170	
	Set bolt ($\frac{1}{4}$" x $\frac{3}{4}$" long) } Fixing guide	4	218553	
	Spring washer } Fixing guide	4	3074	
	Plain washer } Fixing guide	4	3900	
29	Handle for rear lid, outer	1	306461	
	Screw (2 B.A. x $\frac{5}{8}$") fixing handle	2	78005	
30	Handle for rear lid, inner	1	302207	
31	Boss } Fixing handles	1	320046	
32	Coil spring } Fixing handles	1	313493	
33	Cap for coil spring } Fixing handles	1	320047	
34	Locking pin } Fixing handles	1	302262	
35	Hinge leaf for rear lid	2	306493	
	Plain washer } Fixing hinge leaf and quadrant to rear lid	4	3830	
	Spring washer } Fixing hinge leaf and quadrant to rear lid	6	3075	
	Nut ($\frac{5}{16}$") } Fixing hinge leaf and quadrant to rear lid	6	3490	
36	Hinge bracket for rear lid	2	302158	
	Bolt ($\frac{5}{16}$" x $\frac{11}{16}$" long) } Fixing hinge bracket to body	4	214923	
	Spring washer } Fixing hinge bracket to body	4	3075	
	Nut ($\frac{5}{16}$") } Fixing hinge bracket to body	4	3490	
37	Pin for rear lid hinge	2	302165	
	Split pin } Fixing hinge pin	4	3901	
	Plain washer } Fixing hinge pin	4	3899	

cardiagn.com

HARD TOP AND TROPICAL ROOF

EXPORT ONLY

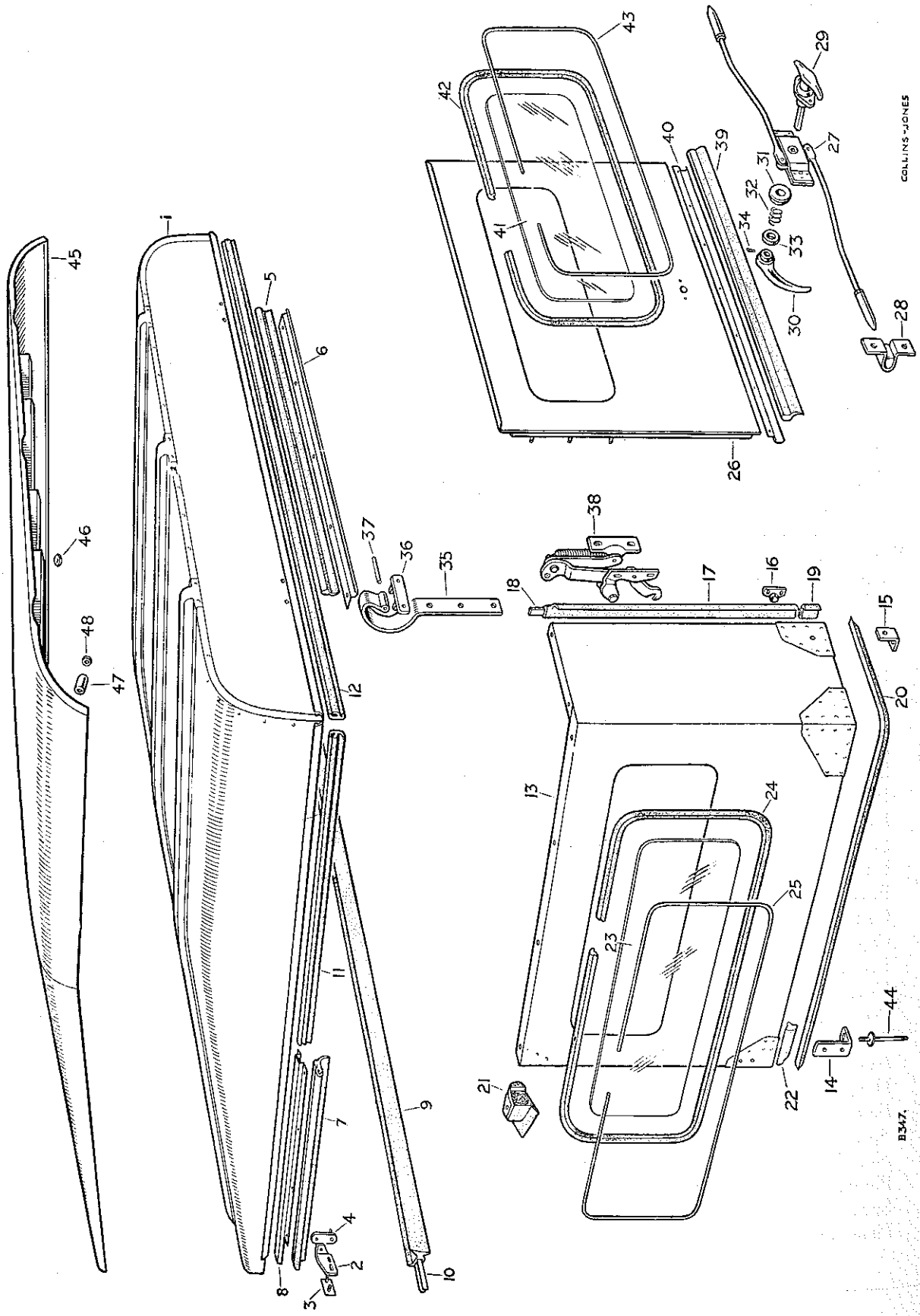

HARD TOP AND TROPICAL ROOF

EXPORT ONLY

PLATE REF.	1 2 3 4	DESCRIPTION	Qty.	Part No.	REMARKS
		Quadrant complete R.H.	1	302187	
38		Quadrant complete L.H.	1	302188	
		Spring for quadrant	2	302198	
		Bolt (¼" x ¾" long) — Fixing quadrant to side panel	4	237141	
		Plain washer — Fixing quadrant to side panel	4	3840	
		Spring washer — Fixing quadrant to side panel	4	3074	
		Nut (¼") — Fixing quadrant to side panel	4	3819	
39		Rubber sealing strip for rear lid, bottom	1	302244	
40		Retaining strip for bottom seal	1	302184	
		Drive screw fixing retaining strip	8	78002	
41		Glass for rear lid	1	302173	
42		Weather strip for back light	1	302175	
43		Filler strip for weather strip	1	302176	
44		Mounting stud — Fixing hard top to body	4	302148	Supplied with side panel assembly
		Plain washer — Fixing hard top to body	4	3898	Supplied with side panel assembly
		Spring washer — Fixing hard top to body	4	3075	Supplied with side panel assembly
		Nut (5/16") — Fixing hard top to body	4	3490	Supplied with side panel assembly
		TROPICAL ROOF PANEL ASSEMBLY	1	262338	
45		Tropical roof panel	1	302364	
		Screw (2 B.A. x ½" long) — Fixing panel to roof at end of stiffener	10	77869	
		Plain washer — Fixing panel to roof at end of stiffener	20	3852	
46		Rubber washer — Fixing panel to roof at end of stiffener	10	302371	
		Shakeproof washer — Fixing panel to roof at end of stiffener	10	71082	
		Nut (2 B.A.) — Fixing panel to roof at end of stiffener	10	3823	
		Screw (¼" x 2" long)	10	78102	
		Plain washer — Fixing roof to panel at sides	20	3900	
47		Distance piece — Fixing roof to panel at sides	10	302372	
48		Rubber washer — Fixing roof to panel at sides	10	302373	
		Spring washer — Fixing roof to panel at sides	10	3074	
		Nut (¼") — Fixing roof to panel at sides	10	3819	
		Drive screw — Fixing panel to roof stiffener	45	77704	Alternative.
		Pop rivet — Fixing panel to roof stiffener	45	300919	Check before ordering

cardiagn.com

CAB AND TROPICAL ROOF

EXPORT ONLY

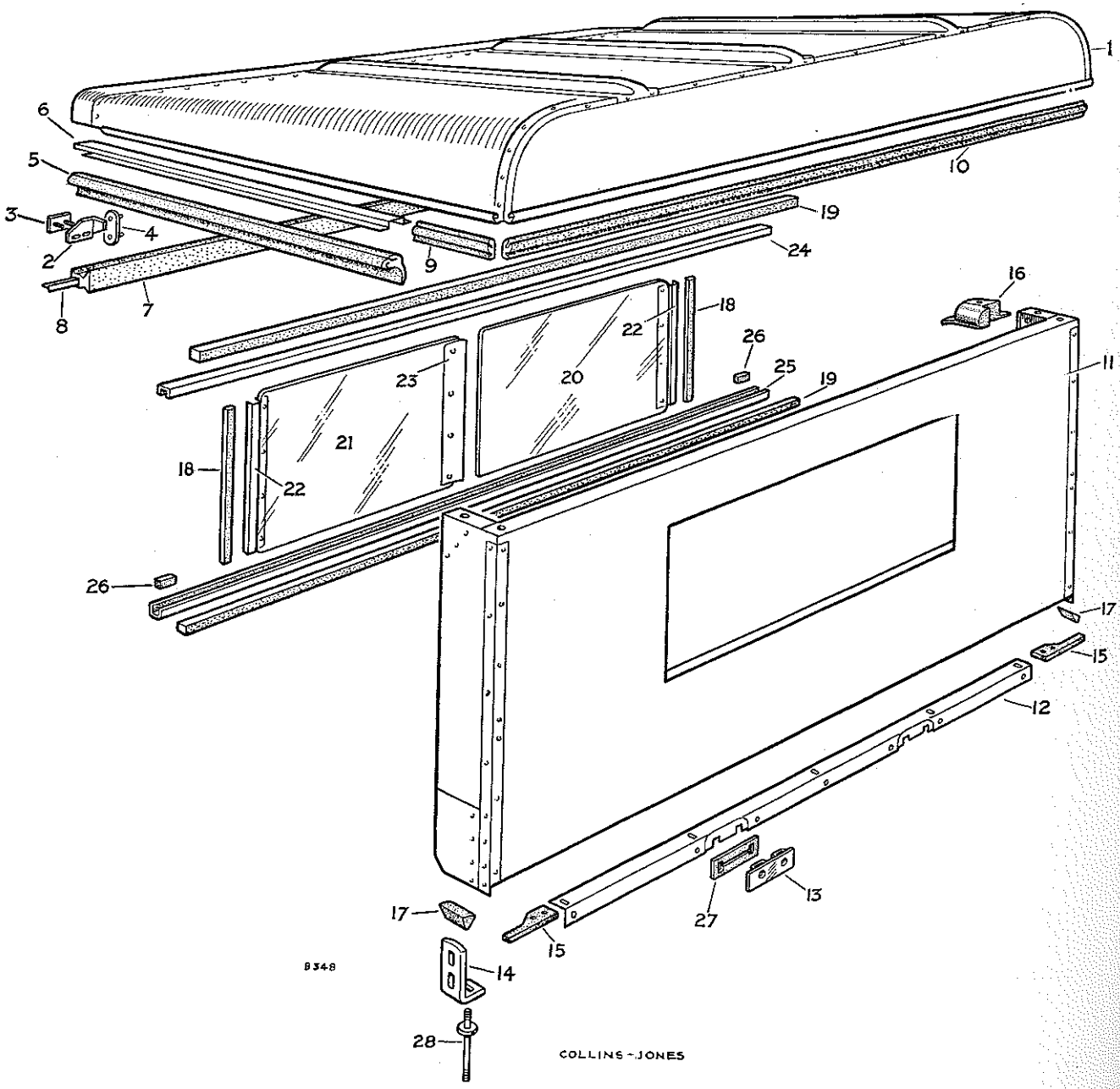

CAB AND TROPICAL ROOF

EXPORT ONLY

PLATE REF.	1 2 3 4 DESCRIPTION	Qty.	Part No.	REMARKS
	CAB COMPLETE ASSEMBLY	1	262315	With sliding back light
	CAB COMPLETE ASSEMBLY	1	262344	With fixed back light
1	CAB ROOF ASSEMBLY	1	302293	
	Adjustment bracket, R.H. } Canopy	1	302068	
2	Adjustment bracket, L.H } to screen	1	302069	
3	Stud plate }	2	302070	
	Plain washer } Fixing	4	3830	
	Spring washer } adjustment brackets	4	3075	
	Nut ($\frac{5}{16}$") }	4	3490	
4	Adjustable link	2	302072	
	Bolt ($\frac{5}{16}$" x $\frac{11}{16}$" long) } Fixing	2	214923	
	Plain washer } link to	2	3830	
	Spring washer } adjustment	2	3075	
	Nut ($\frac{5}{16}$") } bracket	2	3490	
	Plain washer } On link for	2	3830	
	Spring washer } fixing canopy	2	3075	
	Nut ($\frac{5}{16}$") } to screen	2	3490	
5	Rubber seal for door	2	302128	
	Retaining strip, R.H. } For	2	302131	
6	Retaining strip, L.H } door seal	2	302132	
	Screw ($\frac{1}{4}$" x $\frac{1}{2}$" long) } Fixing	8	78003	
	Spring washer } retaining strips	8	3074	
	Nut ($\frac{1}{4}$") } to door	8	3819	
7	Rubber seal for canopy	1	302125	
8	Stiffening strip for canopy seal	1	302130	
	Drive screw fixing strip	4	77932	
9	Rubber seal, roof to side	2	302292	
10	Rubber seal, roof to back	1	302123	
	Bolt ($\frac{5}{16}$" x $\frac{29}{32}$" long) }	2	237161	
	Bolt ($\frac{5}{16}$" x $\frac{11}{16}$" long) } Fixing roof	5	237158	
	Plain washer } at sides	14	3899	
	Spring washer } and rear	7	3075	
	Nut ($\frac{5}{16}$") }	7	3490	
11	CAB REAR PANEL ASSEMBLY	1	302458	With sliding back light
	CAB REAR PANEL ASSEMBLY	1	302444	With fixed back light
12	Support angle for rear of cab	1	302283	
	Bolt ($\frac{5}{16}$" x $\frac{11}{16}$" long) }	5	214923	
	Plain washer } Fixing support	5	3841	
	Spring washer } to rear panel	5	3075	
	Nut ($\frac{5}{16}$") }	5	3490	
13	Packing for spare wheel	2	302441	
	Screw ($\frac{1}{4}$" x $\frac{7}{8}$" long) }	4	77699 }	Alternative,
	Bolt ($\frac{1}{4}$" x $\frac{5}{8}$" long) } Fixing packing	4	237140 }	Check before ordering
	Spring washer } to rear panel	4	3074	
	Nut ($\frac{1}{4}$") }	4	3819	
14	Mounting bracket	2	302115	
	Bolt ($\frac{5}{16}$" x 1" long) }	4	237160	
	Plain washer } Fixing mounting	4	3830	
	Spring washer } brackets	4	3075	
	Nut ($\frac{5}{16}$") }	4	3490	
15	Rubber mounting pad at rear corner	2	302291	
	Bifurcated rivet fixing pad	4	77954	

cardiagn.com

CAB AND TROPICAL ROOF

EXPORT ONLY

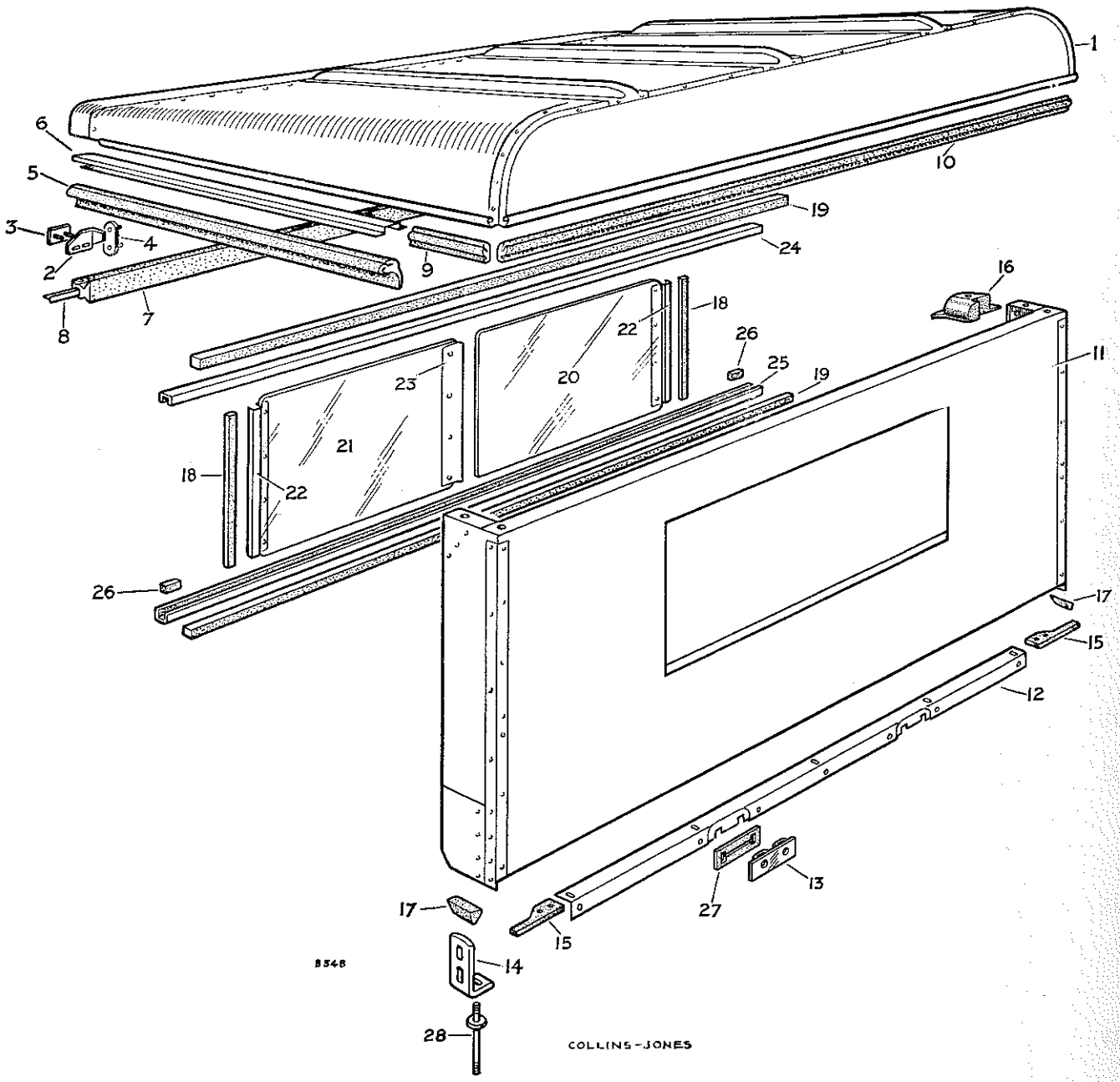

PLATE REF.

16

17
18
19
20
21
22
23
24
25
26
27
28

cardiagn.com

CAB AND TROPICAL ROOF

EXPORT ONLY

PLATE REF.	1 2 3 4 DESCRIPTION	Qty.	Part No.	REMARKS
16	DRAUGHT PAD ASSEMBLY, R.H.	1	302259	
	DRAUGHT PAD ASSEMBLY, L.H	1	302260	
	Rubber corner pad, L.H	1	302255	
	Rubber corner pad, R.H.	1	302254	
	Washer plate } Fixing	2	302258	
	Bifurcated rivet } pad	2	311597	
	Screw (2 B.A x $\frac{5}{8}''$ long) } Fixing	2	77758	
	Spring washer } pad to	2	3073	
	Nut (2 B.A.) } front pillar	2	3823	
17	Rubber draught filler piece for corner	2	302223	
18	Rubber sealing strip, side } For	2	302454	
19	Rubber sealing strip, upper and lower } back light	2	302453	
20	Sliding back light, R.H. half	1	302451	
21	Sliding back light, L.H. half	1	302452	
22	Finger pull for back light	2	307358	
23	Draught strip for L.H. half	2	302449	
	Screw (2 B.A. x $\frac{1}{2}''$ long) } Fixing	12	77869	Cab with sliding back light
	Shakeproof washer } finger pull and	12	74236	
	Nut (2 B.A.) } draught strips	12	3823	
24	Channel, upper } For	1	302445	
25	Channel, lower } back light	1	302447	
	Drive screw fixing channel	12	77707	
26	Stop for back light	2	302450	
	Drive screw fixing stop	2	77927	
	Glass for back light	1	302173	
	Rubber weather strip for glass	1	302175	Cab with fixed back light
	Filler for weather strip	1	302176	
27	Draught pad for spare wheel stop	2	302286	
28	Mounting stud }	2	302148	
	Plain washer } Fixing cab	4	3898	
	Spring washer } at corners	4	3075	
	Nut ($\frac{5}{16}''$) }	4	3490	
	Bolt ($\frac{5}{16}''$ x $\frac{19}{32}''$ long) } Fixing cab	7	236154	
	Spring washer } to support	7	3075	
	Nut ($\frac{5}{16}''$) } angle	7	3490	
	TROPICAL ROOF ASSEMBLY FOR CAB	1	304977	
	Tropical roof panel	1	304021	
	Screw (2 B.A x $\frac{1}{2}''$ long) }	10	77869	
	Plain washer } Fixing roof	10	3852	
	Rubber washer } at end	10	302371	
	Shakeproof washer } of stiffeners	10	71082	
	Nut (2 B.A.) }	10	3823	
	Screw ($\frac{1}{4}''$ x 2" long) }	6	78102	
	Plain washer }	12	3900	
	Distance piece } Fixing roof	6	302372	
	Rubber washer } at sides	6	302373	
	Spring washer }	6	3074	
	Nut ($\frac{1}{4}''$) }	6	3819	
	Drive screw } Fixing panel to	21	77704	Alternatives.
	Pop rivet } roof stiffener	21	300919	Check before ordering

cardiagn.com

carolagh.com

REAR POWER TAKE-OFF

PLATE REF. 1 2 3 4	DESCRIPTION	Qty.	Part No.	REMARKS
	Complete kits of parts of the various combinations of rear power take-off are supplied under the part numbers listed below:—			
	REAR POWER TAKE-OFF COMPLETE ASSEMBLY, WITHOUT PULLEY	1	231201	Comprises all standard items on pages 23 to 29
	REAR POWER TAKE-OFF COMPLETE ASSEMBLY, WITH PULLEY	1	231202	Comprises all standard items on pages 23 to 33
	CENTRE POWER TAKE-OFF COMPLETE ASSEMBLY	1	231203	Comprises all standard items on pages 23 to 25
	CENTRE POWER TAKE-OFF, LESS PULLEY	1	261835	Comprises 230855 and 230693

cardiagn.com

REAR & CENTRE POWER TAKE-OFF DRIVE SECTION GEARBOX UNITS

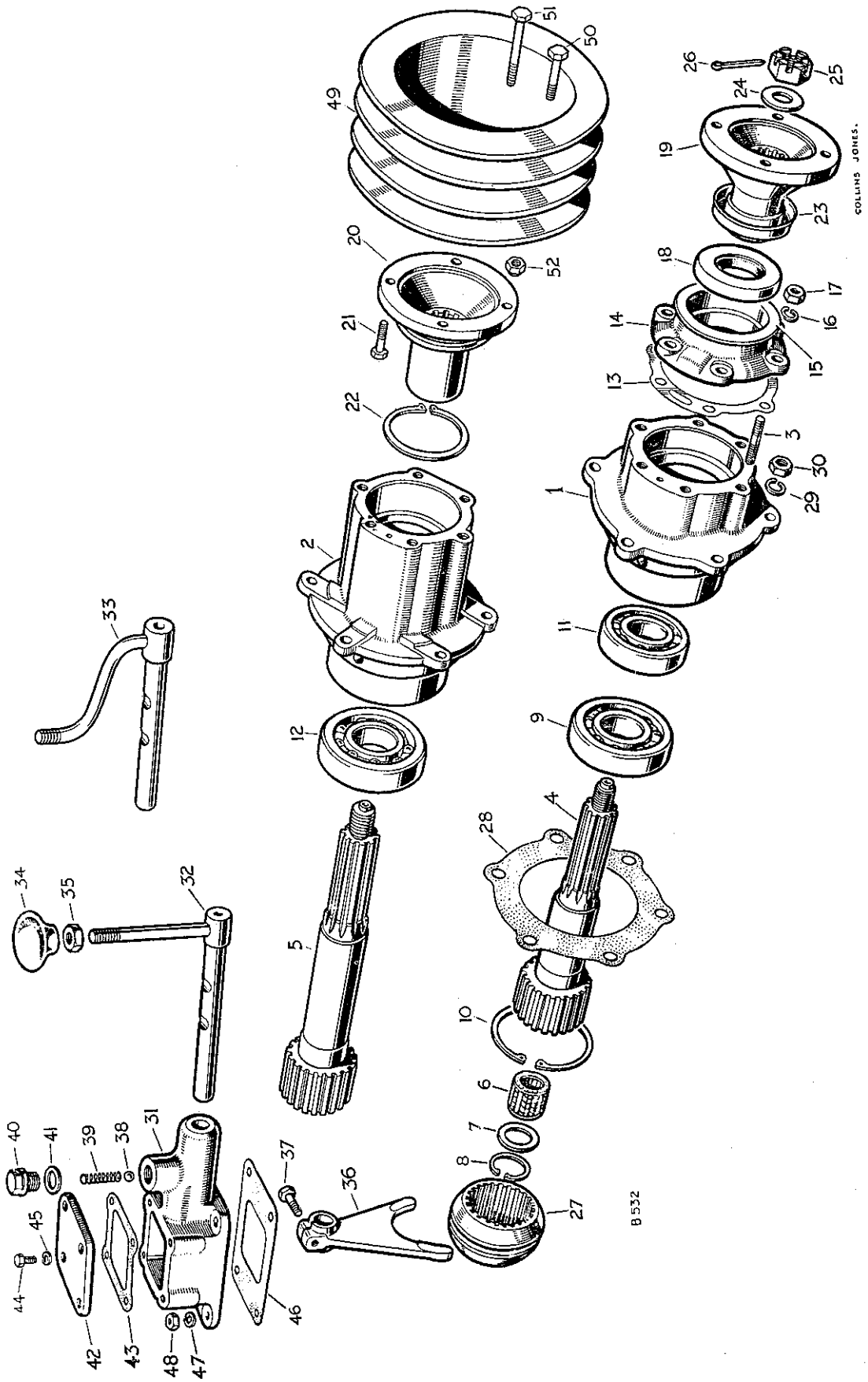

REAR & CENTRE POWER TAKE-OFF DRIVE SECTION GEARBOX UNITS

PLATE REF.	1 2 3 4 DESCRIPTION	Qty.	Part No.	REMARKS
	GEARBOX P.T.O. DRIVE ASSEMBLY	1	230855	
	GEARBOX P.T.O. DRIVE ASSEMBLY	1	235241	For use with Air Compressor
1	HOUSING ASSEMBLY FOR DRIVE BEARING	1	217769	Units numbered 860001 to 862000
	HOUSING ASSEMBLY FOR DRIVE BEARING ..	1	219860	Units numbered 862001 onwards
2	HOUSING ASSEMBLY FOR DRIVE BEARING	1	235239	For use with Air Compressor
3	Stud for oil seal housing	6	216986	
	Shaft for P.T.O. drive	1	217497	Units numbered 860001 to 862000
4	Shaft for P.T.O. drive	1	219744	Units numbered 862001 onwards
5	Shaft for P.T.O. drive	1	235237	For use with Air Compressor
6	Bearing for gearbox mainshaft	1	217478	
7	Retaining plate for bearing	1	217523	
8	Circlip fixing retaining plate	1	217525	
9	Bearing for drive shaft, front	1	55714	
	Circlip, bearing to shaft	1	214795	Units numbered 860001 to 862000
10	Circlip, bearing to housing	1	217972	Units numbered 860001 to 862000
11	Bearing for drive shaft, rear	1	217325	
12	Bearing for drive shaft, rear	1	235240	For use with Air Compressor
13	Shim for bearing, .003"	As required	41050	Units numbered 862001 onwards
	Shim for bearing, .005"	As required	41131	Units numbered 862001 onwards
	Housing for oil seal	1	06717	Alternative
14	Housing for oil seal	1	236543	Mudshield type Check before ordering
15	Mudshield for housing	1	236548	
	Joint washer for oil seal housing	1	217681	Units numbered 860001 to 862000
16	Spring washer } Fixing oil seal housing	6	3075	
17	Nut ($\frac{5}{16}$") } to bearing housing	6	2828	
18	Oil seal for drive shaft	1	236417	
19	Flange for P.T.O. drive shaft	1	06718	
20	Flange for P.T.O. drive shaft	1	235253	For use with Air Compressor
21	Bolt ($\frac{3}{8}$" x $1\frac{5}{16}$" long) for flange	4	215328	For use with Air Compressor
22	Circlip retaining bolts	1	217546	For use with Air Compressor
23	Mudshield for flange	1	236074	
24	Plain washer } Fixing flange to shaft	1	3300	
25	Slotted nut } Fixing flange to shaft	1	3259	
26	Split pin } Fixing flange to shaft	1	2428	
27	Dog clutch for P.T.O. shaft	1	217522	
28	Joint washer for housing	1	217680	
29	Spring washer } Fixing housing	6	3076	
30	Nut ($\frac{3}{8}$") } to transfer case	6	2827	
	P.T.O. SELECTOR ASSEMBLY	1	230693	
	P.T.O. SELECTOR ASSEMBLY	1	231853	Welder and Air Compressor
31	Housing for P.T.O. selector	1	217773	
32	Selector shaft and rod for P.T.O.	1	218171	
33	Selector shaft and rod for P.T.O.	1	231507	Welder and Air Compressor
34	Knob for rod	1	218050	
35	Locknut ($\frac{7}{16}$") for knob	1	3764	
36	Fork for selector shaft	1	217584	
37	Set bolt ($\frac{5}{16}$" x $\frac{13}{16}$" long) fixing fork to shaft	1	237159	
38	Steel ball } For selector shaft	1	1643	
39	Spring } For selector shaft	1	214290	

cardiagn.com

REAR & CENTRE POWER TAKE-OFF DRIVE SECTION GEARBOX UNITS

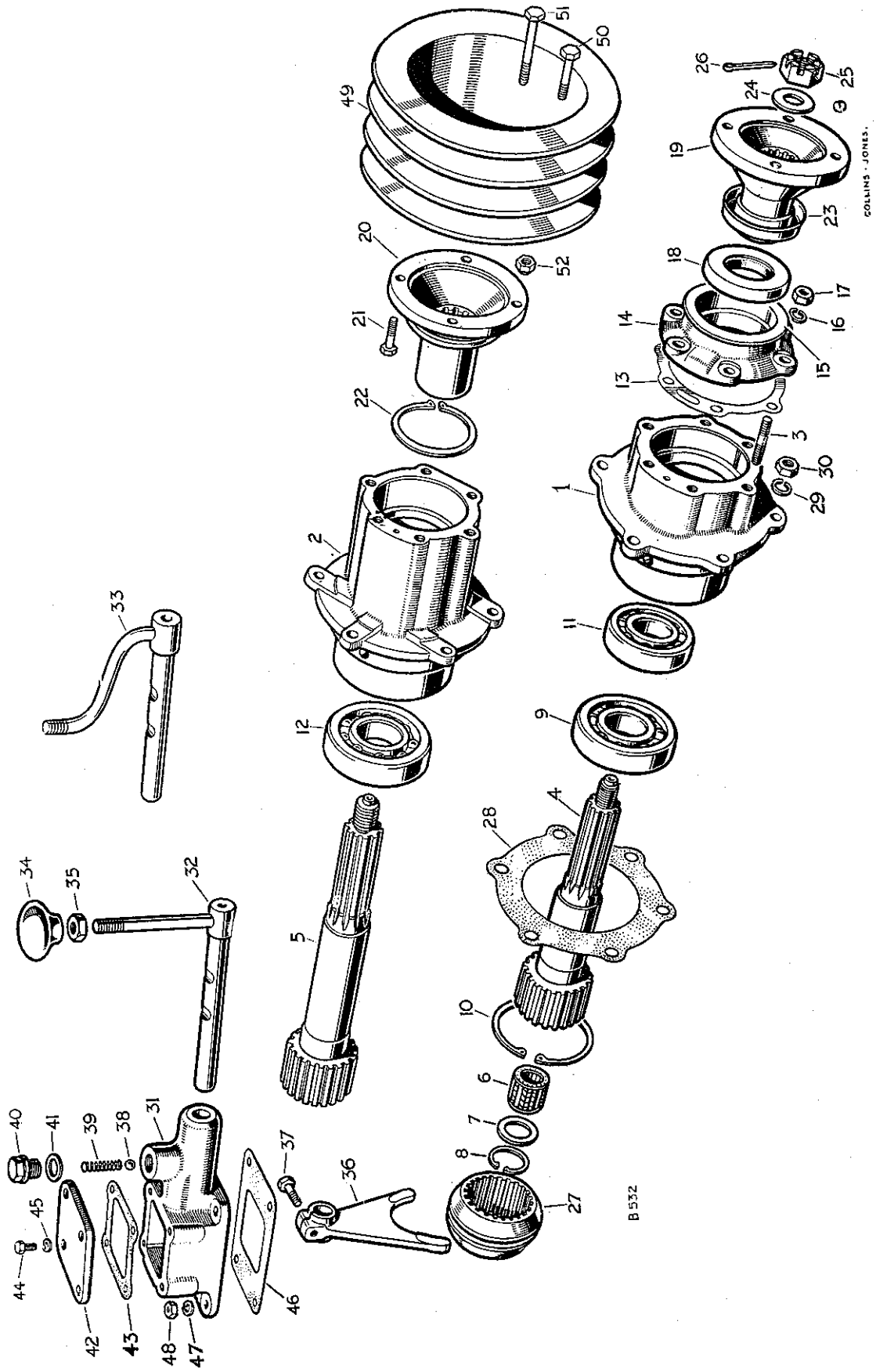

PLATE REF.	
40	
41	
42	
43	
44	
45	
46	
47	
48	
49	
50	
51	
52	

cardiagn.com

REAR & CENTRE POWER TAKE-OFF DRIVE SECTION GEARBOX UNITS

PLATE REF.	1 2 3 4 DESCRIPTION	Qty.	Part No.	REMARKS
40	Plug for spring	1	217763	
41	Joint washer for plug	1	213960	
42	Cover plate for housing	1	217774	
43	Joint washer for plate	1	219995	
	Set screw ($\frac{1}{4}$" Whit. x $\frac{9}{16}$" long) fixing plate	4	55779	Units numbered 860001 to 861680
44	Set bolt ($\frac{1}{4}$" Whit. x $\frac{3}{4}$" long) } Fixing plate	4	215594	Units numbered 861681 onwards
45	Spring washer } Fixing plate	4	3074	Units numbered 861681 onwards
46	Joint washer for housing	1	230140	
47	Spring washer } Fixing housing to transfer box	4	3075	
48	Nut ($\frac{5}{16}$") } Fixing housing to transfer box	4	2828	
49	Pulley for centre power take-off	1	231636	
50	Bolt ($\frac{3}{8}$" x $1\frac{5}{16}$" long) } Fixing pulley	4	215238	When centre P.T.O. pulley only is fitted
51	Bolt ($\frac{3}{8}$" x $1\frac{23}{32}$" long) } Fixing pulley	4	215332	When rear P.T.O. is also fitted
52	Self-locking nut ($\frac{3}{8}$") } Fixing pulley	4	251322	

When centre power take-off is fitted, Part Nos. 230692 Gearbox power take-off drive assembly and 230693 Power take-off selector assembly are required; the pulley and bolts are normally supplied by the makers of any special equipment fitted

When Part Nos. 230692 Gearbox power take-off drive assembly and 230693 Power take-off selector assembly are fitted, the following parts, listed in Sections I and II, are not required: 230696 Mainshaft bearing housing complete, 217970 Cover plate.

cardiagn.com

REAR POWER TAKE-OFF DRIVE SECTION

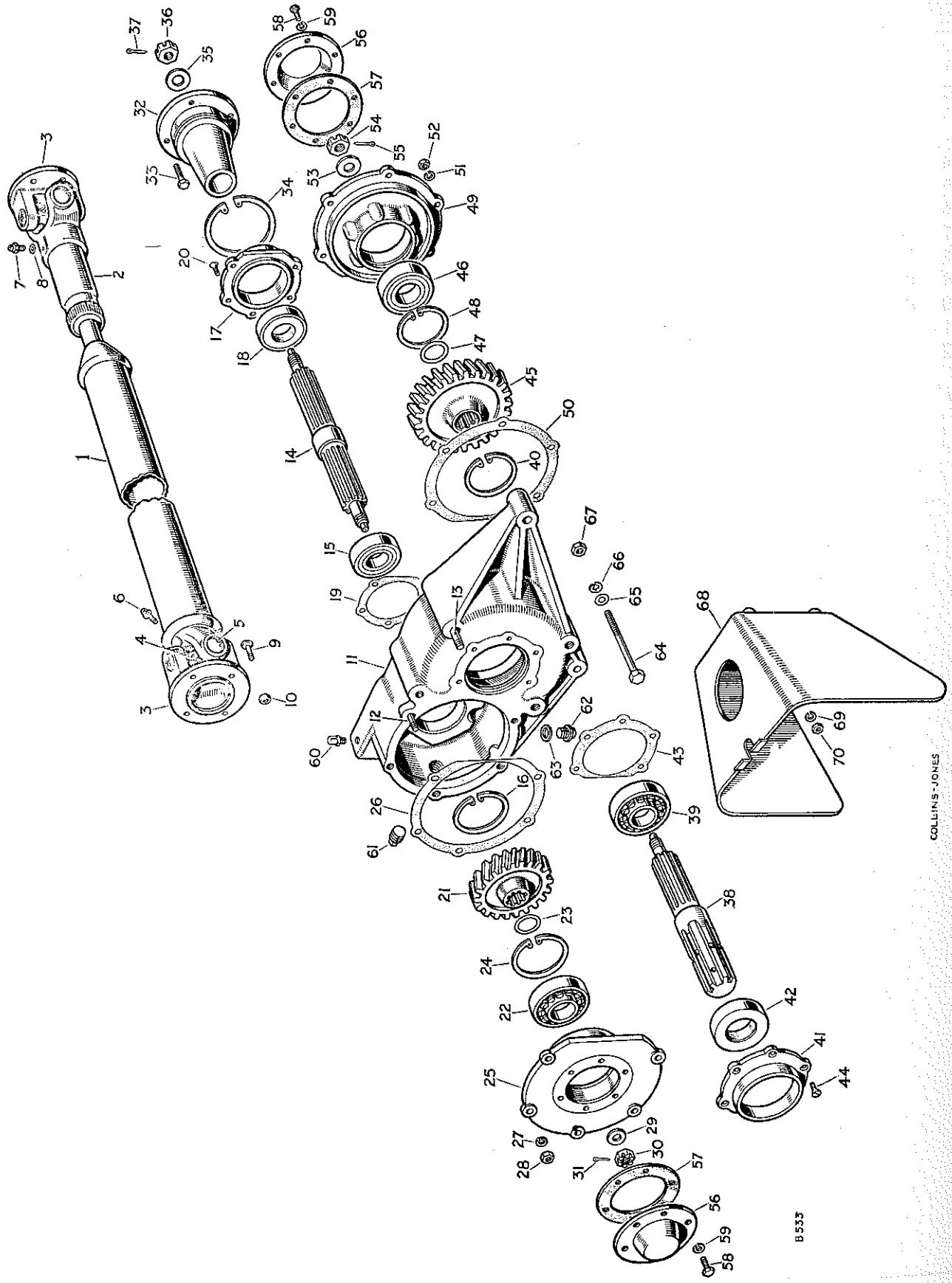

PLATE REF.	
1	P
2	
3	
4	
5	
6	
7	
8	
9	Sp Bo
10	Se RI RI
11	
12	
13	
14	
15	P
16	C
17	P
18	C
19	J
20	S
21	C
22	P S
23	S S
24	C
25	H
26	J
27	S
28	N
29	P
30	S
31	S
32	F
33	S
34	C
35	P
36	S
37	S C
38	O
39	B
40	C
41	R
42	O
43	Jo

cardiagn.com

REAR POWER TAKE-OFF DRIVE SECTION

PLATE REF.	1 2 3 4 DESCRIPTION	Qty.	Part No.	REMARKS
1	Propeller shaft, P.T.O. drive	1	217573	
2	Splined end } For	1	262468	
3	Flange } propeller shaft	2	262469	
4	Journal complete for propeller shaft	2	43023	
5	Circlip for journal	8	242522	
6	Grease nipple for journal	2	232557	
	Grease nipple for propeller shaft .383″ dia.	1	219696	} Alternative type.
7	Grease nipple for propeller shaft .250″ dia.	1	234532	} Check before ordering
8	Washer for nipple	1	261428	
9	Special bolt } Fixing	4	214871	} Alternative.
	Bolt ($\frac{3}{8}$″ x $1\frac{3}{16}$″ long) } propeller shaft to	4	237341	} Check before ordering
10	Self-locking nut ($\frac{3}{8}$″) } drive flanges	8	50526	
	REAR POWER TAKE-OFF DRIVE ASSEMBLY, 10 SPLINE	1	218353	Units numbered 860001 to 860400
	REAR POWER TAKE-OFF DRIVE ASSEMBLY, 6 SPLINE	1	230176	Units numbered 860401 onwards
11	HOUSING ASSEMBLY FOR P.T.O.	1	217665	Units numbered 860001 to 860400
	HOUSING ASSEMBLY FOR P.T.O.	1	230288	Units numbered 860401 onwards
12	Stud for bearing housing	10	214054	
	Stud (2″ long) for pulley housing or guard	4	55778	Units numbered 860001 to 860400
13	Stud ($2\frac{5}{16}$″ long) for pulley housing or guard	4	231432	Units numbered 860401 onwards
14	Input shaft for P.T.O.	1	217562	
15	Bearing for input shaft, front	1	217504	
16	Circlip, bearing to housing	1	217566	
17	Retainer for oil seal } For input	1	217663	
18	Oil seal } shaft	1	217508	
19	Joint washer for retainer	1	217664	
20	Screw ($\frac{1}{4}$″ Whit. x $\frac{9}{16}$″ long) fixing retainer	5	55779	
21	Gear wheel, 20 teeth	1	236301	Only supplied in pairs
22	Bearing for input shaft, rear	1	217504	
	Shim .005″ } For rear	As required	217553	
23	Shim .010″ } input shaft	As required	217554	
	Shim .020″ } bearing	As required	217555	
24	Circlip, bearing to housing	1	217566	
25	Housing for rear input shaft bearing	1	217661	
26	Joint washer for rear bearing housing	1	217662	
27	Spring washer } Fixing bearing	5	3075	
28	Nut ($\frac{5}{16}$″) } housing to casing	5	2828	
29	Plain washer } Fixing	1	3300	
30	Slotted nut } rear bearing	1	3259	
31	Split pin } to input shaft	1	2428	
32	Flange for P.T.O. input shaft	1	217667	
33	Special bolts for propeller shaft	4	217565	
34	Circlip retaining bolts to flange	1	217546	
35	Plain washer } Fixing	1	3300	
36	Slotted nut } flange to	1	3259	
37	Split pin } input shaft	1	2428	
	Output shaft for P.T.O. 10-spline	1	217548	Units numbered 860001 to 860400
38	Output shaft for P.T.O. 6-spline	1	230098	Units numbered 860401 onwards
39	Bearing for output shaft, rear	1	217504	
40	Circlip for bearing	1	217566	
41	Retainer for oil seal } For output	1	217663	
42	Oil seal } shaft	1	217508	
43	Joint washer for retainer	1	217664	

COLLINS-JONES

cardiagn.com

REAR POWER TAKE-OFF DRIVE SECTION

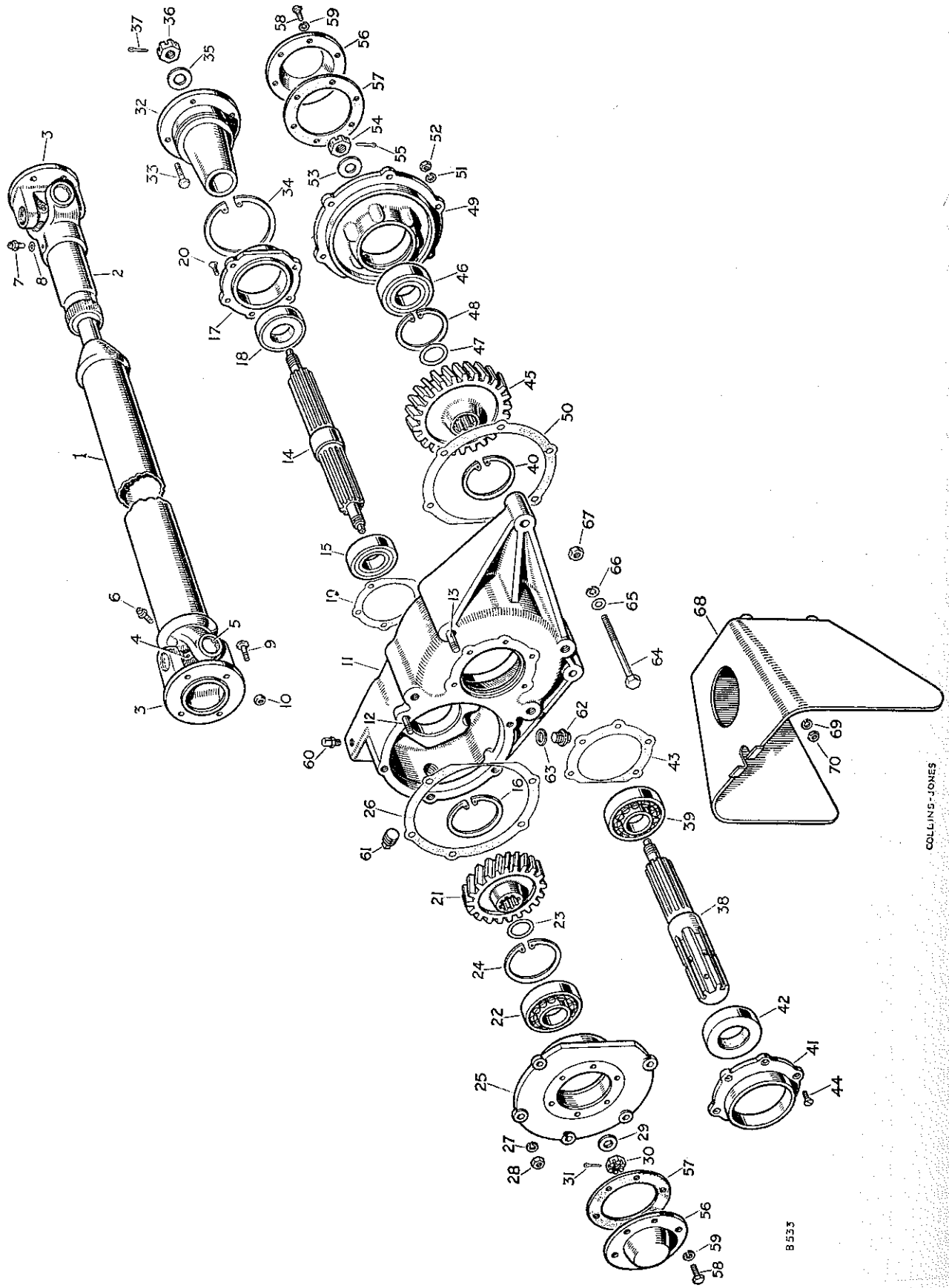

PLATE REF.
44
45
46
47
48
49
50
51
52
53
54
55
56
57
58
59
60
61
62
63
64
65
66
67
68
69
70

REAR POWER TAKE-OFF DRIVE SECTION

PLATE REF.	1 2 3 4 DESCRIPTION	Qty.	Part No.	REMARKS
44	Screw ($\frac{1}{4}$" Whit. x $\frac{9}{16}$" long) fixing retainer	5	55779	
45	Gear wheel, 24 teeth	1	236301	Only supplied in pairs
46	Bearing for output shaft, front	1	217504	
	Shim .005" } For front	As required	217553	
47	Shim .010" } output shaft	As required	217554	
	Shim .020" } bearing	As required	217555	
48	Circlip, bearing to housing	1	217566	
49	Housing for output shaft front bearing	1	217661	
50	Joint washer for bearing housing	1	217662	
51	Spring washer } Fixing bearing	5	3075	
52	Nut ($\frac{5}{16}$") } housing to casing	5	2828	
53	Plain washer } Fixing	1	3300	
54	Slotted nut } front bearing to	1	3259	
55	Split pin } output shaft	1	2428	
56	Cover plate for bearings	2	217659	
57	Joint washer for cover plate	2	217660	
58	Set bolt ($\frac{1}{4}$" Whit. x $\frac{1}{2}$" long) } Fixing cover plates to bearing housings	12	215758	
59	Spring washer	12	3074	
60	Breather for casing	1	42431	
61	Filler plug	1	3292	
	Oil level plug	1	215769	
	Washer for plug	1	232037	
62	Drain plug for casing	1	3088	
63	Fibre washer for plug	1	213960	
64	Bolt ($\frac{3}{8}$" x 5$\frac{3}{32}$" long)	2	215366	Units numbered 860001 to 860400
	Bolt ($\frac{3}{8}$" x 2$\frac{3}{8}$" long)	1	215338	Units numbered 860001 to 860400
	Bolt ($\frac{3}{8}$" x 5$\frac{1}{2}$" long)	2	215370	Units numbered 860401 onwards
	Bolt ($\frac{3}{8}$" x 2$\frac{3}{4}$" long) } Fixing P.T.O. assembly to chassis	1	215342	Units numbered 860401 onwards
65	Plain washer	2	2219	
66	Spring washer	3	3076	
67	Nut ($\frac{3}{8}$")	3	2827	
68	Guard for P.T.O. spline	1	230122	
69	Spring washer } Fixing	4	3076	
70	Nut ($\frac{3}{8}$") } guard	4	2827	
	ADAPTOR ASSEMBLY FOR POWER TAKE-OFF	1	230024	10-spline drive to 6-spline output
	Retaining chain for adaptor	1	230028	10-spline drive to 6-spline output
	Split ring for chain	1	219880	10-spline drive to 6-spline output
	Set bolt (2 B.A. x $\frac{1}{2}$" long)	1	3610	10-spline drive to 6-spline output
	Retaining pin	1	230027	10-spline drive to 6-spline output
	Guard for splined adaptor	1	230046	

COLLINS-JONES

cardiagn.com

REAR POWER TAKE-OFF PULLEY SECTION

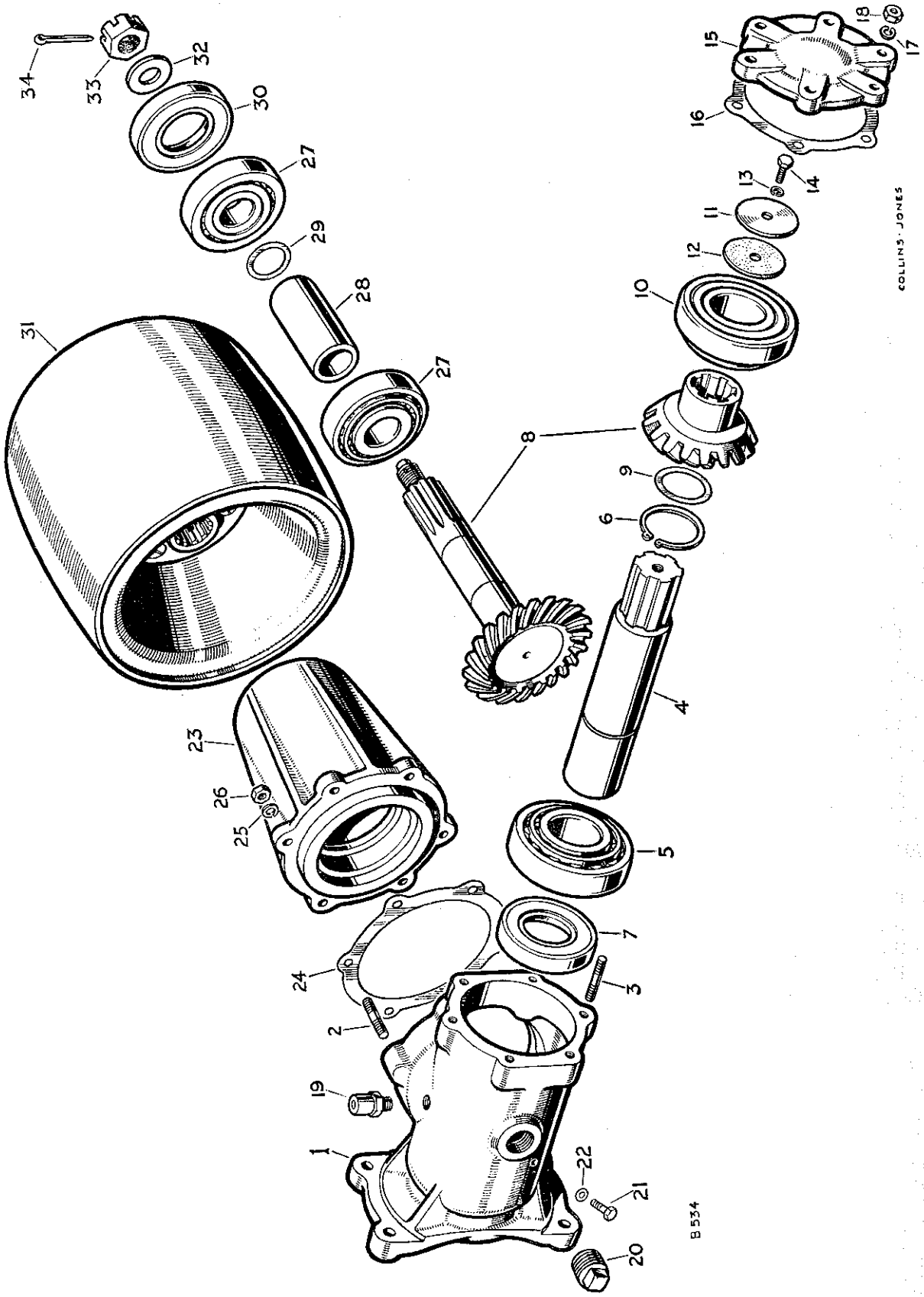

PLATE REF.	
	P
	P
1	
2	
3	
4	
5	
6	
7	
8	
9	
10	
11	
12	
13	S
14	S
15	P
	P
	S
16	S
	S
	S
	S
	S
17	S
18	N
19	B
20	F
21	Pl
22	W
23	H
	Sh
24	Sh
	Sh
25	Sp
26	Nu
27	Be

cardiagn.com

REAR POWER TAKE-OFF PULLEY SECTION

PLATE REF.	1 2 3 4 DESCRIPTION	Qty.	Part No.	REMARKS
	POWER TAKE-OFF ASSEMBLY, PULLEY SECTION 10-SPLINE	1	218354	Units numbered 860001 to 860400
	POWER TAKE-OFF ASSEMBLY, PULLEY SECTION 6-SPLINE	1	230177	Units numbered 860401 onwards
1	HOUSING ASSEMBLY FOR P.T.O. PINION	1	217654	Units numbered 860001 to 860400
	HOUSING ASSEMBLY FOR P.T.O. PINION	1	218846	Units numbered 860401 onwards
2	Stud for pulley drive housing	6	214054	
3	Stud for end plate	6	212103	
4	Pinion driving sleeve, 10-spline	1	217675	Units numbered 860001 to 860400
	Pinion driving sleeve, 6-spline	1	230095	Units numbered 860401 to 861440
	Pinion driving sleeve, 6-spline	1	232960	Units numbered 861441 onwards
5	Bearing for sleeve	1	217505	
6	Circlip, bearing to sleeve	1	217567	
7	Oil seal for driving sleeve	1	217507	
8	Spiral bevel wheel and pinion	1	232409	Units numbered 860001 to 860400
	Spiral bevel wheel and pinion	1	232410	Units numbered 860401 to 861440
	Spiral bevel wheel and pinion	1	233377	Units numbered 861441 onwards
	Shim .005" } For spiral bevel wheel	As required	217556	Units numbered 860001 to 860400
9	Shim .010" } For spiral bevel wheel	As required	217557	Units numbered 860001 to 860400
	Shim .020" } For spiral bevel wheel	As required	217558	Units numbered 860001 to 860400
	Shim .005" } For spiral bevel wheel	As required	231308	Units numbered 860401 onwards
	Shim .010" } For spiral bevel wheel	As required	231309	Units numbered 860401 onwards
	Shim .020" } For spiral bevel wheel	As required	231310	Units numbered 860401 onwards
10	Bearing for bevel wheel	1	217505	
11	Retaining plate for bevel wheel	1	217657	
12	Cork washer for retaining plate	1	217658	
13	Spring washer } Fixing plate to driving sleeve	1	3074	
14	Set bolt (¼" Whit. x ½" long) } Fixing plate to driving sleeve	1	237139	
15	End plate for bevel wheel bearing	1	217656	Units numbered 860001 to 860400
	End plate for bevel wheel bearing	1	218841	Units numbered 860401 onwards
	Shim .005" } For bevel wheel end plate	As required	217668	Units numbered 860001 to 860400
16	Shim .010" } For bevel wheel end plate	As required	217669	Units numbered 860001 to 860400
	Shim .020" } For bevel wheel end plate	As required	217670	Units numbered 860001 to 860400
	Shim .005" } For bevel wheel end plate	As required	218842	Units numbered 860401 onwards
	Shim .010" } For bevel wheel end plate	As required	218843	Units numbered 860401 onwards
	Shim .020" } For bevel wheel end plate	As required	218844	Units numbered 860401 onwards
17	Spring washer } Fixing bearing end plate to pinion housing	6	3074	
18	Nut (¼") } Fixing bearing end plate to pinion housing	6	2823	
19	Breather for housing	1	42431	
20	Filler plug for housing	1	3292	
21	Plug for oil level	1	215769	
22	Washer for plug	1	232037	
23	Housing for pulley drive pinion	1	217650	
	Shim .005" } For pulley drive pinion housing	As required	217651	
24	Shim .010" } For pulley drive pinion housing	As required	217652	
	Shim .020" } For pulley drive pinion housing	As required	217653	
25	Spring washer } Fixing pulley drive housing to pinion housing	6	3075	
26	Nut (5/16") } Fixing pulley drive housing to pinion housing	6	2828	
27	Bearing for pinion	2	217506	

cardiagn.com

REAR POWER TAKE-OFF PULLEY SECTION

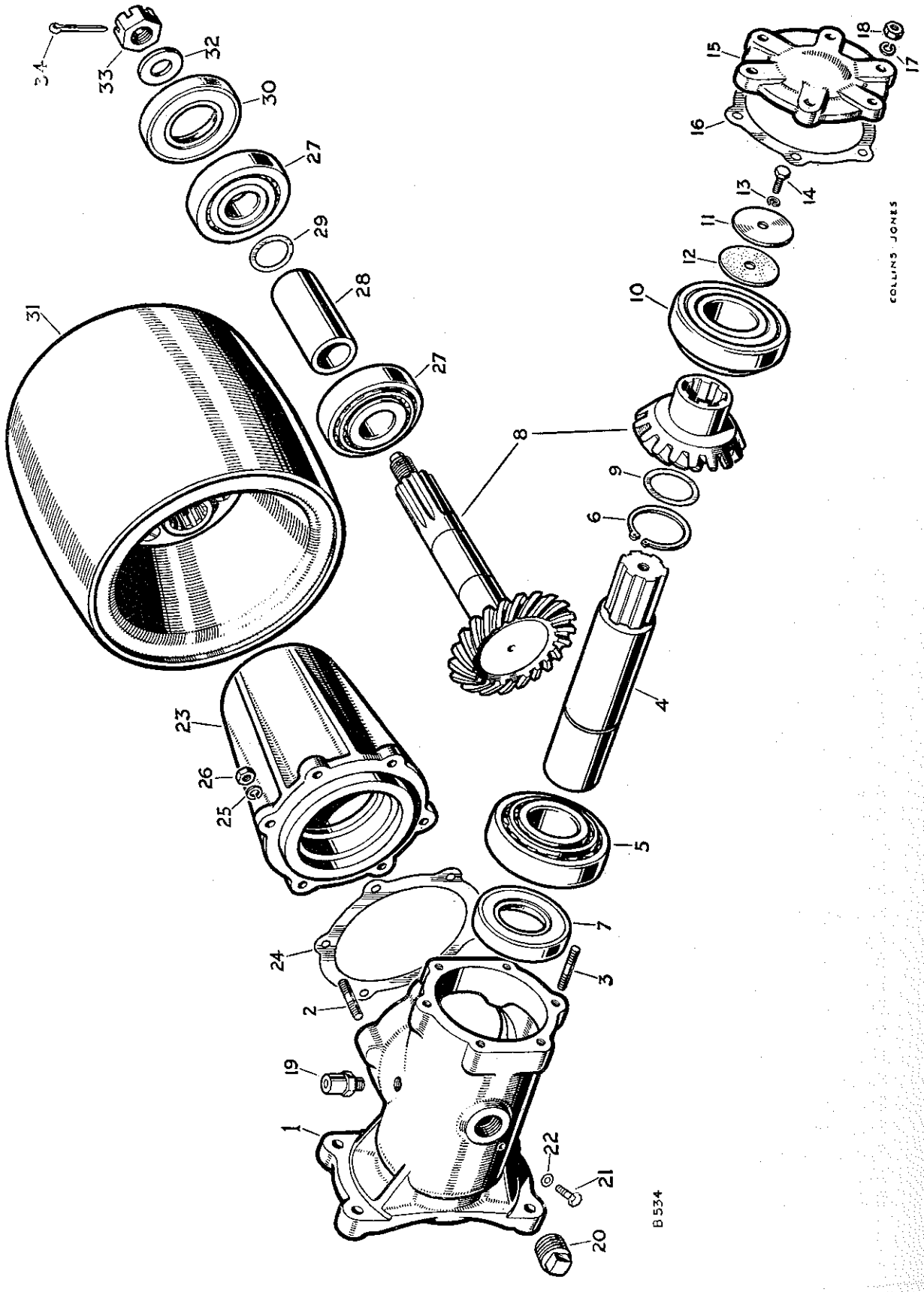

PLATE REF.
28
29
30
31
32
33
34

cardiagn.com

REAR POWER TAKE-OFF PULLEY SECTION

PLATE REF.	1 2 3 4	DESCRIPTION	Qty.	Part No.	REMARKS
28		Distance tube for bearings	1	217560	
		Shim .005″	As required	217553	
29		Shim .010″ For bevel pinion bearings	As required	217554	
		Shim .020″	As required	217555	
30		Oil seal for bevel pinion bearings	1	217507	
31		Pulley	1	217647	
32		Plain washer Fixing	1	3300	
33		Slotted nut pulley to	1	3259	
34		Split pin bevel pinion	1	2428	

cardiagn.com

ENGINE GOVERNOR

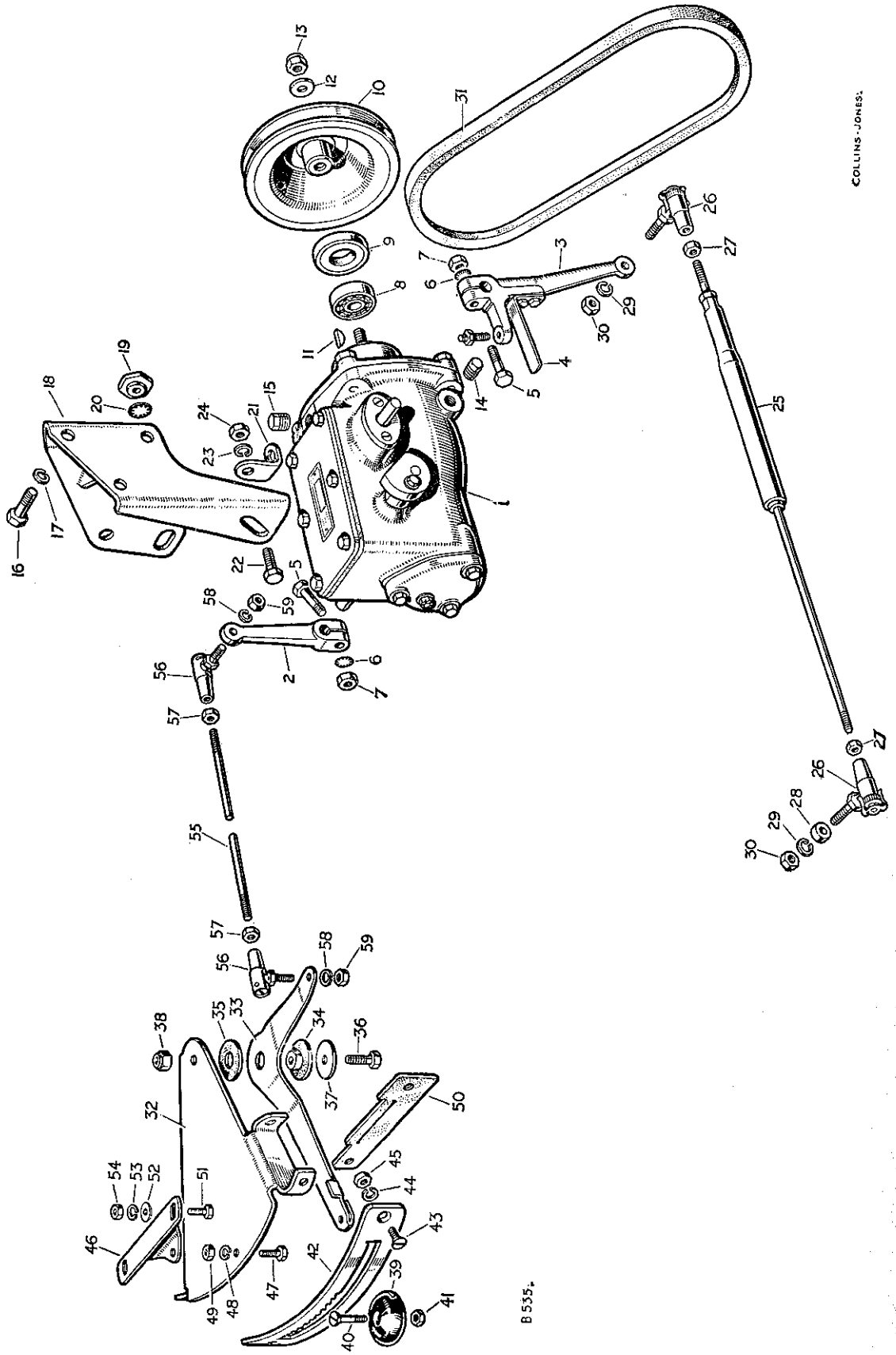

PLATE REF.

1
2
3
4
5
6
7
8
9
10
11
12
13
14
15
16
17
18
19
20
21
22
23
24
25
26
27
31
32
33
34
35
36
37
38
39

cardiagn.com

ENGINE GOVERNOR

PLATE REF.	1 2 3 4	DESCRIPTION	Qty.	Part No.	REMARKS
		ENGINE GOVERNOR COMPLETE ASSEMBLY	1	234199	
1		Engine governor complete	1	218827	
2		Lever, governor to quadrant	1	261515	
3		Lever, governor to bell crank	1	262660	
4		Spring blade for governor arm	1	263059	
5		Bolt ($\frac{1}{4}$" x 1" long) } Fixing	2	215056	
6		Shakeproof washer } levers to	2	70884	
7		Nut ($\frac{1}{4}$") } governor	2	2823	
8		Bearing, large	1	262729	
		Bearing, small	1	262728	
9		Oil seal for pulley end	1	261573	
10		Pulley for governor	1	261517	
11		Woodruff key for pulley	1	261561	
12		Plain washer } Fixing	1	3665	
13		Special self-locking nut } pulley	1	261518	
14		Level plug for governor	1	261574	
15		Filler plug for governor	1	261575	
16		Set bolt ($\frac{5}{16}$" x $\frac{11}{16}$" long) } Fixing governor	3	215161	
17		Spring washer } to bracket	3	3075	
18		Bracket for governor	1	219511	
19		Special nut } Fixing bracket to	3	219508	
20		Shakeproof washer } thermostat housing	3	73353	
21		Support for bracket	1	232610	
22		Bolt ($\frac{5}{16}$" x $\frac{11}{16}$" long) } Fixing	1	237158	
23		Spring washer } support to	1	3075	
24		Nut ($\frac{5}{16}$") } bracket	1	2828	
25		Control rod, governor to bell crank	1	218602	
26		Ball joint complete for rod	1	231261	
27		Locknut ($\frac{1}{4}$") for ball joint	1	2823	
		Fork end for rod	1	231452	
		Locknut ($\frac{1}{4}$") for fork end	1	2823	
		Distance piece, bell crank lever end	1	231356	
		Spring washer } Fixing rod to	1	3074	
		Nut ($\frac{1}{4}$") } bell crank lever	1	2823	
		Joint pin } Fixing rod to	1	231451	
		Split pin } governor lever	1	2392	
31		Belt for governor drive	1	219560	
		GOVERNOR CONTROL QUADRANT ASSEMBLY	1	219138	
32		Housing for governor control quadrant	1	219644	
33		Lever for control	1	219242	
34		Bush for lever	1	219658	
35		Washer for lever	1	219659	
		Cable clip	1	3551	
36		Bolt ($\frac{5}{16}$" x 1" long) } Fixing	1	237160	
37		Plain washer } control lever	1	3662	
38		Self-locking nut ($\frac{5}{16}$") } to housing	1	50525	
39		Knob for lever	1	219512	

cardiagn.com

ENGINE GOVERNOR

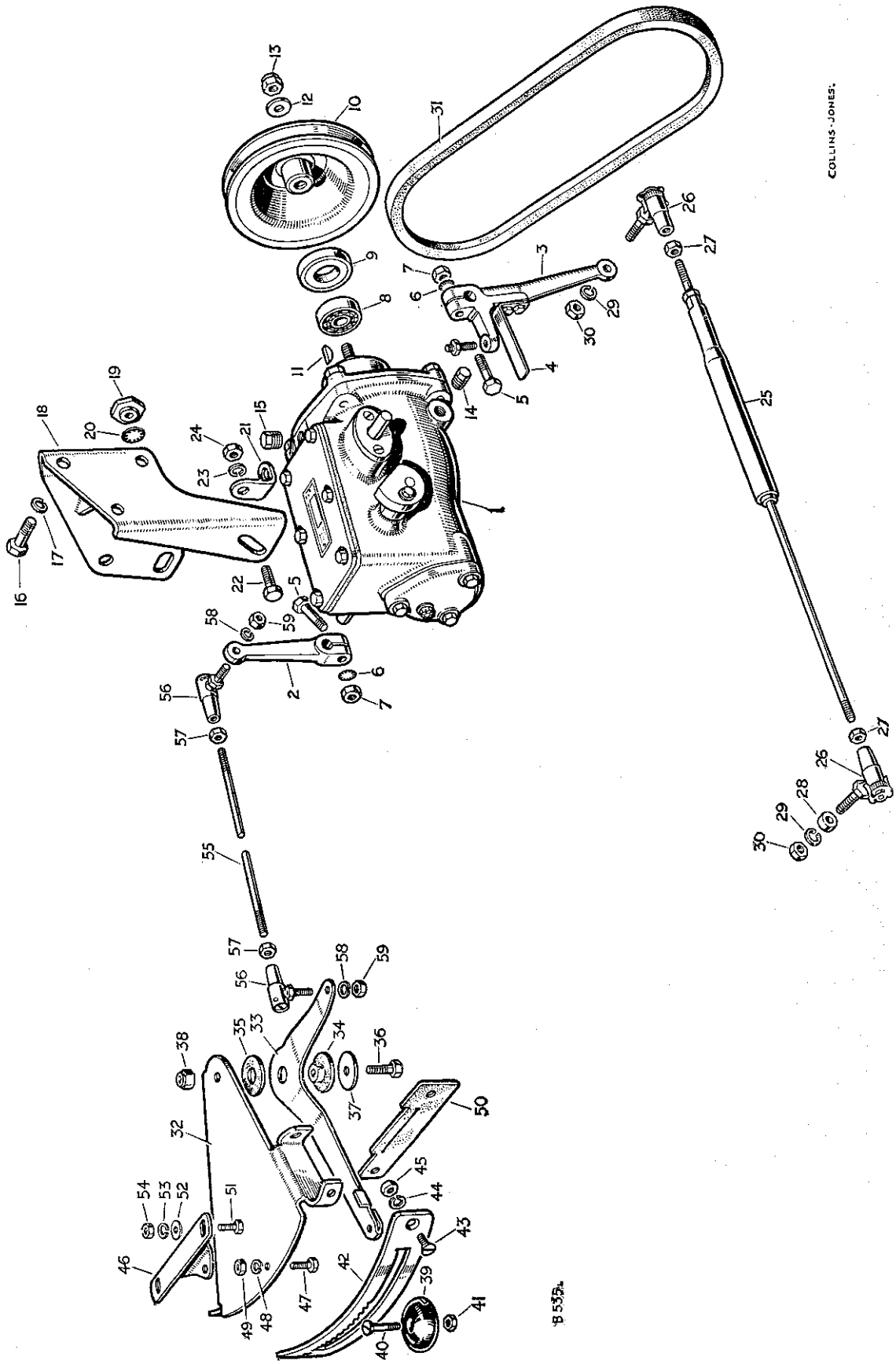

PLATE REF.
40
41
42
43
44
45
46
47
48
49
50
51
53
54
55
56
57
58
59

cardiagn.com

ENGINE GOVERNOR

PLATE REF.	1 2 3 4	DESCRIPTION	Qty.	Part No.	REMARKS
40		Special screw — Fixing knob to lever	1	219673	
41		Nut (2 B.A.) — Fixing knob to lever	1	2247	
42		Quadrant plate	1	219463	
43		Special screw — Fixing quadrant plate to housing	2	219675	
44		Spring washer — Fixing quadrant plate to housing	2	3074	
45		Nut ($\frac{1}{4}$") — Fixing quadrant plate to housing	2	2823	
46		Support for governor control	1	219464	
47		Bolt (2 B.A. x $\frac{7}{16}$" long) — Fixing support to housing	1	234603	
48		Spring washer — Fixing support to housing	1	3073	
49		Nut (2 B.A.) — Fixing support to housing	1	2247	
50		Rubber draught excluder	1	231625	
51		Bolt ($\frac{1}{4}$" x $\frac{9}{16}$" long) — Fixing governor quadrant to dash	2	237139	
53		Spring washer — Fixing governor quadrant to dash	2	3074	
54		Nut ($\frac{1}{4}$") — Fixing governor quadrant to dash	2	2823	
		Bolt (2 B.A. x $\frac{7}{16}$" long) — Fixing support to instrument box	2	234603	
		Plain washer — Fixing support to instrument box	2	3685	
		Spring washer — Fixing support to instrument box	2	3073	
		Nut (2 B.A.) — Fixing support to instrument box	2	2247	
55		Operating rod, quadrant to governor	1	219503	
56		Ball joint for rod	2	219065	
57		Locknut ($\frac{1}{4}$") for ball joint on rod	1	2823	
58		Spring washer — Fixing operating rod to governor and control lever	2	3074	
59		Nut ($\frac{1}{4}$") — Fixing operating rod to governor and control lever	2	2823	
		Special stud for governor bracket	3	232955	
		Fan pulley and governor drive	1	218563	
		Distance washer for fan pulley	1	233803	

cardiagn.com

ENGINE GOVERNOR — 35 M.P.H. SPEED LIMITER

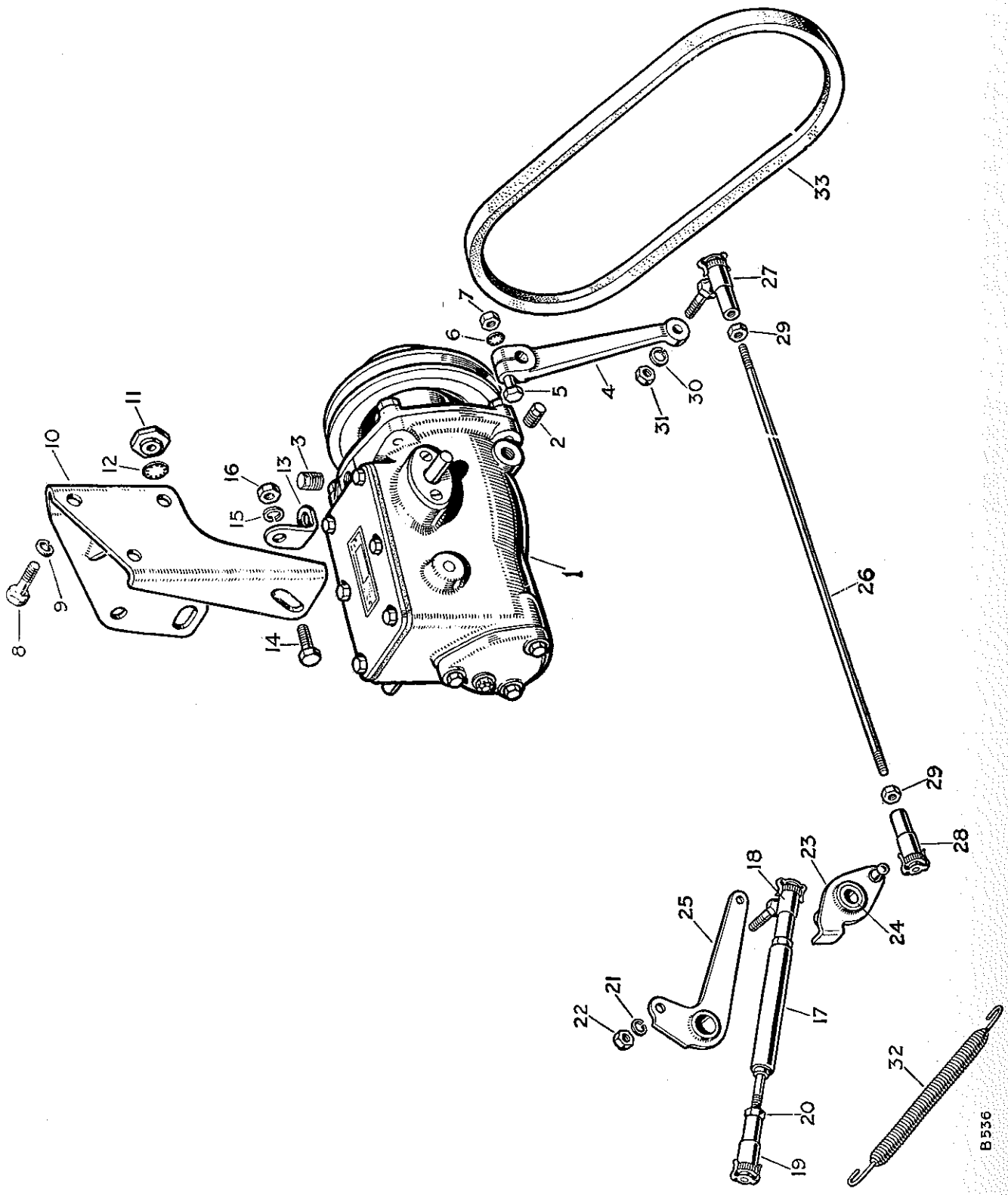

PLATE REF.

1
2
3
4
5
6
7
8
9
10
11
12
13
14
15
16
17
18
19
20
21
22
23
26
27
28
29
32
33

carburetorguide.com

ENGINE GOVERNOR—35 M.P.H. SPEED LIMITER

PLATE REF.	1 2 3 4 DESCRIPTION	Qty.	Part No.	REMARKS
	ENGINE GOVERNOR COMPLETE ASSEMBLY	1	240195	35 M.P.H. speed limiter
1	Engine governor complete	1	236623	
	Oil seal for pulley end	1	261573	
2	Level plug	1	261574	
3	Filler plug	1	261575	
4	Lever, governor to relay	1	244440	
5	Bolt ($\frac{1}{4}''$ x 1″ long)	1	237143	
6	Shakeproof washer	1	70884	
7	Nut ($\frac{1}{4}''$)	1	2823	
8	Bolt ($\frac{5}{16}''$ x $\frac{11}{16}''$ long) } Fixing governor	3	237158	
9	Spring washer } to bracket	3	3075	
10	Bracket for governor	1	219511	
11	Special nut } Fixing bracket to	3	219508	
12	Shakeproof washer } thermostat housing	3	73353	
13	Support for bracket	1	232610	
14	Bolt ($\frac{5}{16}''$ x $\frac{11}{16}''$ long) }	1	237158	
15	Spring washer } Fixing support	1	3075	
16	Nut ($\frac{5}{16}''$) }	1	2828	
17	Control rod complete, accelerator cross-shaft to engine	1	236514	
18	Ball joint	1	231261	
19	Ball joint body	1	236519	
20	Locknut for ball joint	2	2823	
	Distance piece } Fixing	1	231356	
21	Spring washer } control rod to	1	3074	
22	Nut ($\frac{1}{4}''$) } carburettor relay	1	2823	
23	Relay lever for governor	1	239821	
	Distance sleeve for relay	1	219498	
26	Control rod, relay lever to governor	1	236520	
27	Ball joint	1	231261	
28	Ball joint body	1	236519	
29	Locknut for ball joint	2	2823	
	Ball joint	2	1659	
	Locknut for ball joint	2	2247	
32	Return spring for throttle	1	234984	
	Rubber plug for hand throttle hole	1	301346	
33	Belt for governor drive	1	236624	
	Fan pulley and governor drive	1	218563	
	Special stud for governor drive	3	232955	
	Distance washer for fan pulley	1	233803	

cardiagn.com

REAR CAPSTAN WINCH

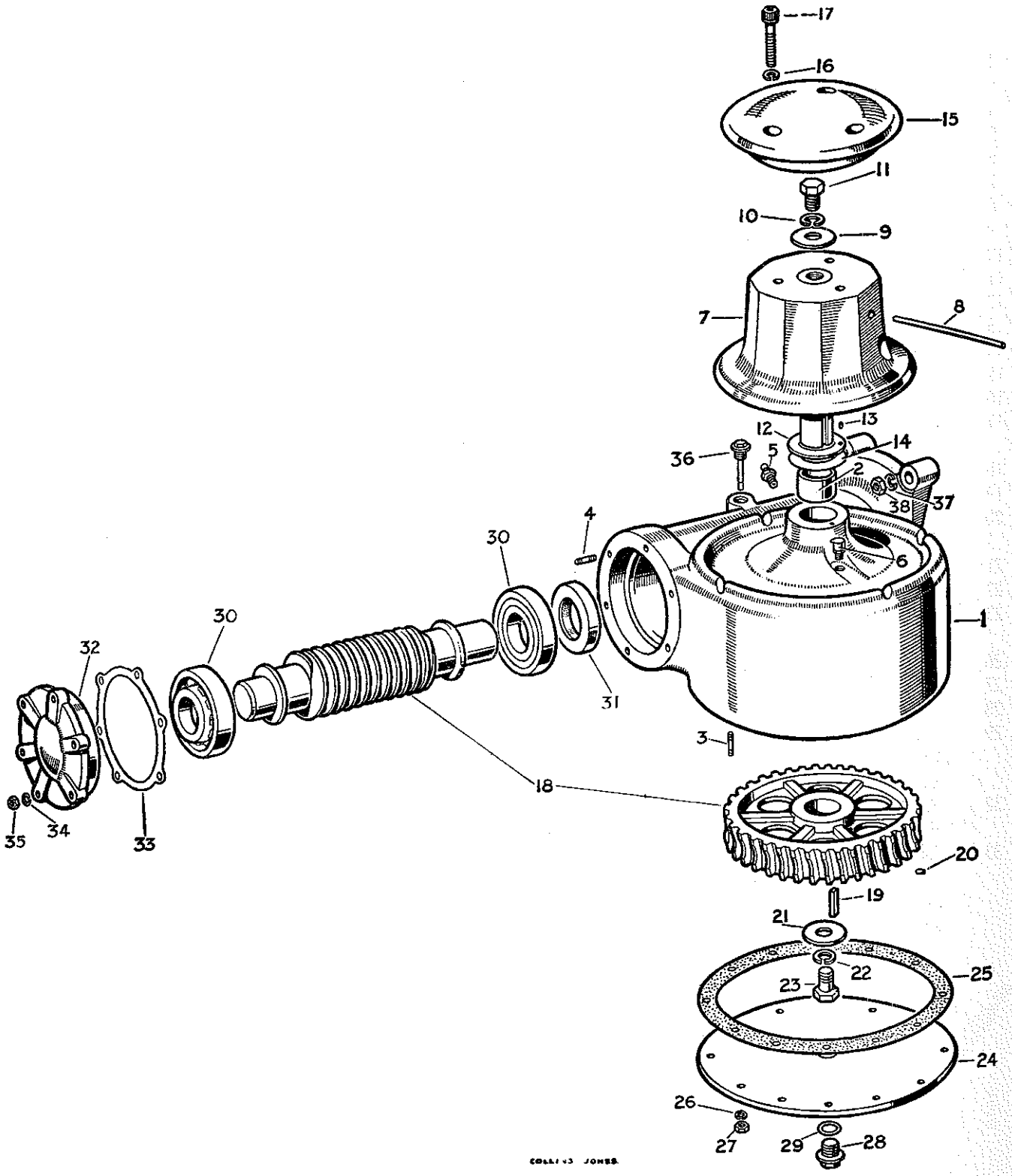

REAR CAPSTAN WINCH

PLATE REF. 1 2 3 4	DESCRIPTION	Qty.	Part No.	REMARKS
	CAPSTAN WINCH ASSEMBLY	1	231709	Suitable for use with 6-spline power take-off only. Assembly no longer serviced, component parts only supplied.
1	HOUSING ASSEMBLY FOR CAPSTAN WINCH	1	231710	
2	Bush for housing	2	219161	
3	Stud for bottom cover	8	212104	
4	Stud for end cover	6	212103	
5	Grease nipple for shaft	1	219696	
6	Breather cup for housing	1	219564	
7	Bollard and shaft complete	1	232125	
8	Pin for bollard	1	237006	
9	Plain washer } Fixing bollard to shaft	1	8060	
10	Spring washer } Fixing bollard to shaft	1	3078	
11	Set bolt ($\frac{1}{2}$" x $\frac{13}{16}$" long) } Fixing bollard to shaft	1	215767	
12	Thrust washer for bollard	1	219089	
13	Peg for thrust washer	1	09561	
14	Shim for bollard	As required	233324	
15	Cap for bollard	1	219115	
16	Spring washer } Fixing cap to bollard	3	3076	
17	Special screw } Fixing cap to bollard	3	219742	
18	Worm wheel and worm	1	232230	
19	Special key for worm wheel	1	219125	
20	Peg for special key	1	09561	
21	Plain washer } Fixing worm wheel to shaft	1	8060	
22	Spring washer } Fixing worm wheel to shaft	1	3078	
23	Set bolt ($\frac{1}{2}$" x $\frac{13}{16}$" long) } Fixing worm wheel to shaft	1	215767	
24	Bottom cover for rear winch housing	1	231701	
25	Joint washer for bottom cover	1	231702	
26	Spring washer } Fixing bottom cover to housing	8	3074	
27	Nut ($\frac{1}{4}$") } Fixing bottom cover to housing	8	2823	
28	Drain plug for rear winch	1	3088	
29	Joint washer for drain plug	1	230507	
30	Roller bearing for worm	2	217505	
31	Oil seal for worm	1	217507	
32	End cover for rear winch housing	1	218841	
33	Shim .005" } For end cover	As required	218842	
33	Shim .010" } For end cover	As required	218843	
33	Shim .020" } For end cover	As required	218844	
34	Spring washer } Fixing end cover to housing	6	3074	
35	Nut ($\frac{1}{4}$") } Fixing end cover to housing	6	2823	
36	Filler plug and dipstick	1	231706	
37	Spring washer } Fixing rear winch to rear power take-off	4	3076	
38	Nut ($\frac{3}{8}$") } Fixing rear winch to rear power take-off	4	2827	

cardiagn.com

FRONT CAPSTAN WINCH

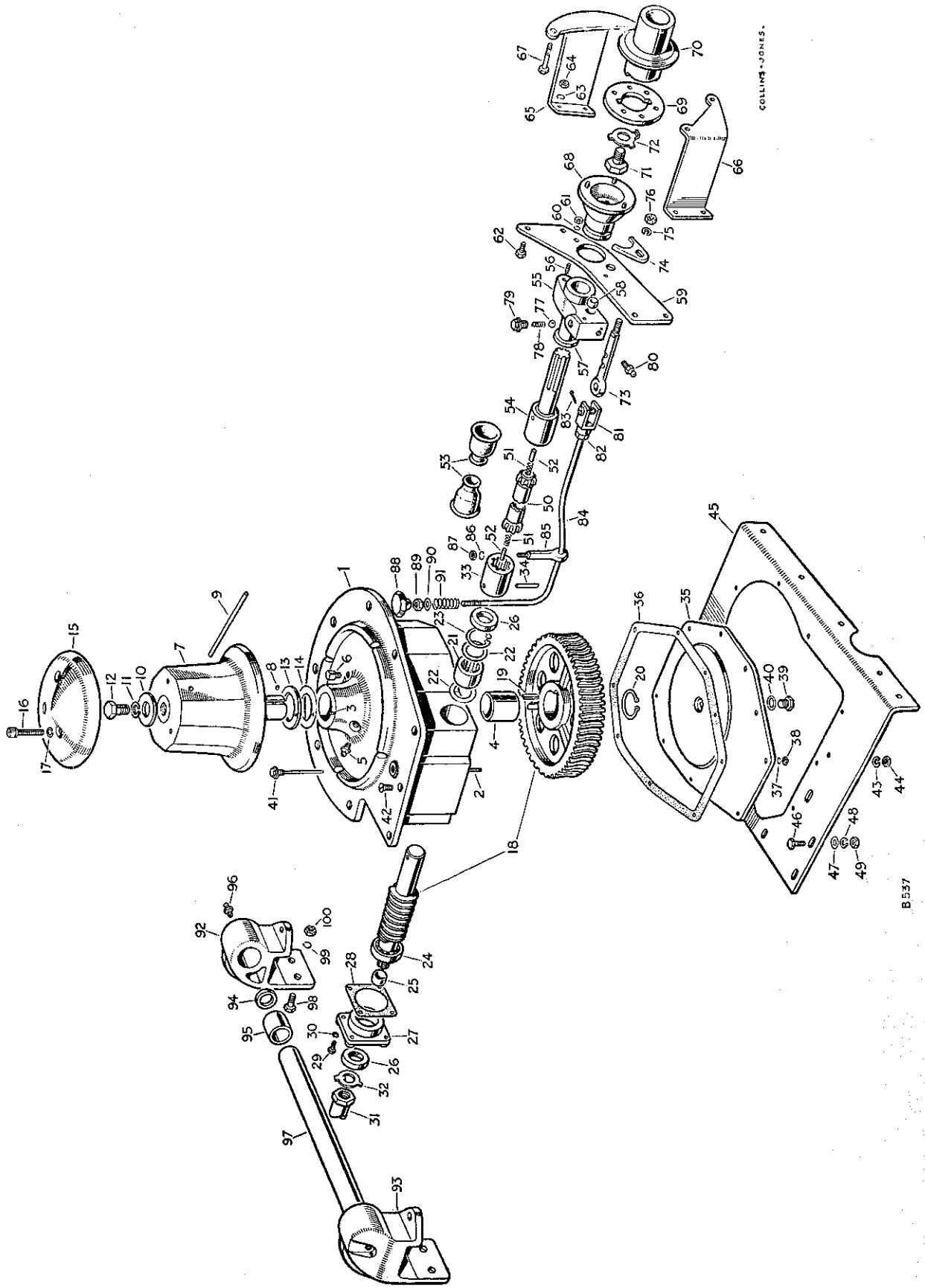

PLATE REF.

1
2
3
4
5
6
7
8
9
10
11
12
13
14
15
16
17
18
19
20
21
22
23
24
25
26
27
28
29
30
31
32
33
34
35
36
37
38
39
40
41

cardiagn.com

FRONT CAPSTAN WINCH

PLATE REF. 1 2 3 4	DESCRIPTION	Qty.	Part No.	REMARKS
	FRONT WINCH COMPLETE ASSEMBLY	1	234809	
	FRONT WINCH ASSEMBLY ...	1	269163	
1	CASING ASSEMBLY FOR FRONT WINCH	1	219703	1st 200 Units
	CASING ASSEMBLY FOR FRONT WINCH	1	235652	After 1st 200 Units
2	Stud for bottom cover	10	212104	
3	Dowel for thrust washer	1	09561	
4	Bush for bollard shaft	2	219161	
5	Grease nipple for shaft	1	219696	
6	Breather cup for housing	1	219564	
7	Bollard and shaft complete	1	234370	
8	Dowel for shaft	1	09561	
9	Pin for bollard	1	237006	
10	Plain washer } Fixing bollard to shaft	1	8060	
11	Spring washer	1	3078	
12	Set bolt ($\frac{1}{2}''$ x $\frac{13}{16}''$ long)	1	215767	
13	Thrust washer } For bollard	1	219089	
14	Shim	As required	233324	
15	Cap for bollard	1	219115	
16	Special screw } Fixing cap to bollard	3	219742	
17	Spring washer	3	3076	
18	Worm wheel and worm complete	1	234807	
19	Special key for worm wheel	1	219125	
20	Circlip fixing worm wheel	1	219691	
21	Roller bearing for worm shaft	1	219622	1st 200 Units
22	Washer for roller bearing	2	219090	1st 200 Units
23	Circlip fixing bearing to casing	1	219623	1st 200 Units
	Roller bearing for worm	1	235646	After 1st 200 Units
	Washer for bearing	2	235648	After 1st 200 Units
	Circlip fixing bearing to casing	1	235647	After 1st 200 Units
24	Ball bearing for worm shaft	1	219088	
25	Distance piece for worm shaft	1	219113	
26	Oil seal for worm shaft	2	219624	
27	Retainer for oil seal	1	219062	
28	Joint washer for oil seal retainer	1	219119	
29	Set bolt (2 B.A x $\frac{1}{2}''$ long) } Fixing oil seal retainer to housing	4	250959	
30	Spring washer	4	3073	
31	Starting dog	1	219087	
32	Lock washer for starting dog	1	219118	
33	Universal joint sleeve	1	219083	
34	Special pin fixing sleeve to worm	1	50473	
35	Bottom cover for winch casing	1	219117	
36	Joint washer for bottom cover	1	219116	
37	Spring washer } Fixing bottom cover to casing	10	3074	
38	Nut ($\frac{1}{4}''$)	10	2823	
39	Drain plug for front winch	1	3088	
40	Joint washer for drain plug	1	230507	
41	Filler plug and dipstick	1	219179	

cardiagn.com

FRONT CAPSTAN WINCH

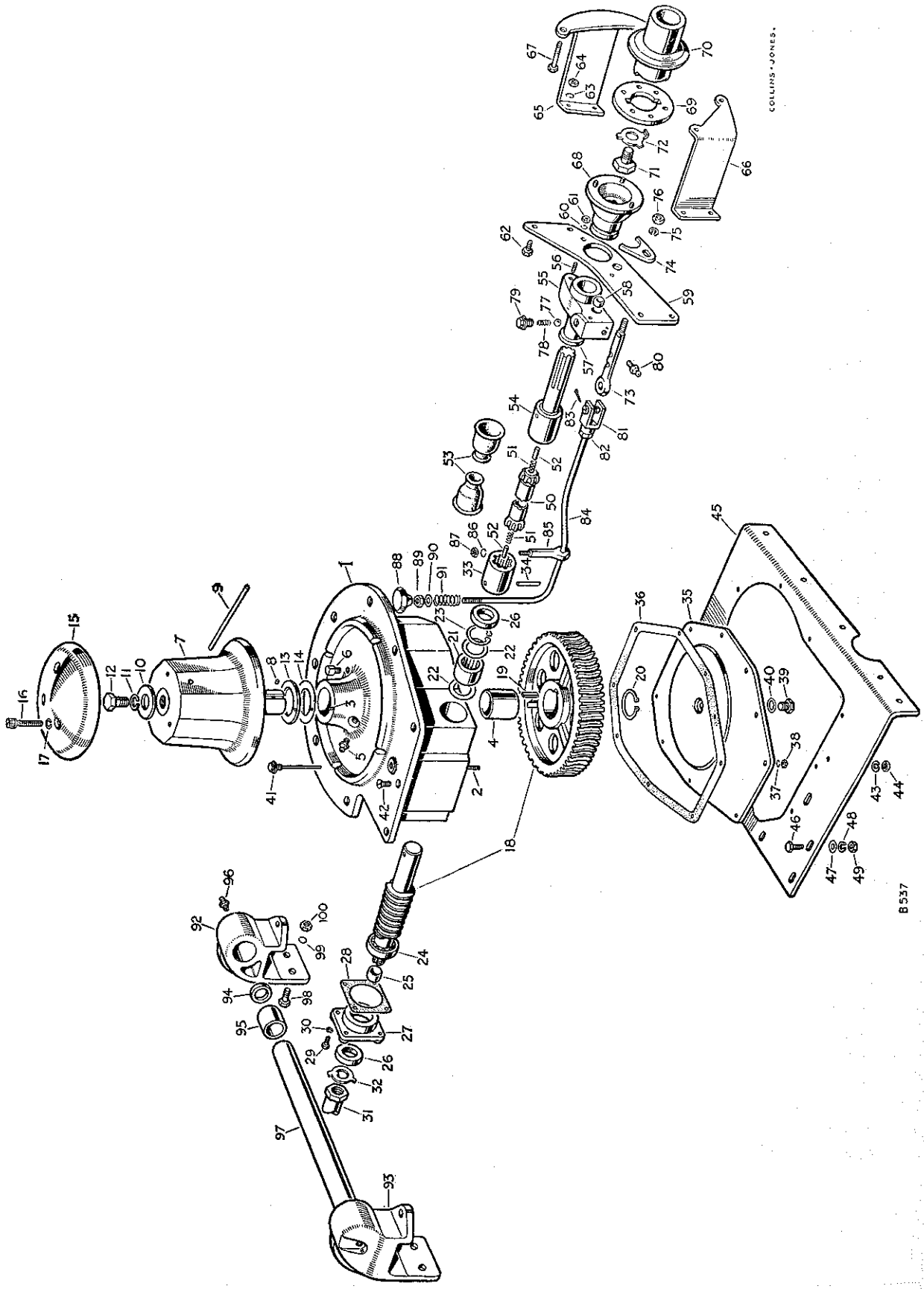

PLATE REF.
42
43
44
45
46
47
48
49
50
51
52
53
54
55
56
57
58
59
60
61
62
63
64
65
66
67
68
69
70
71
72
73
74
75
76
77
78
79
80
81
82
83
84
85
86
87

landrover.com

FRONT CAPSTAN WINCH

PLATE REF.	1 2 3 4 DESCRIPTION		Qty.	Part No.	REMARKS
42	Special bolt	Fixing front winch to support plate	9	219601	
43	Spring washer		9	3075	
44	Nut ($\frac{5}{16}$")		9	2828	
45	Support plate for front winch		1	219120	
	Bolt ($\frac{5}{16}$" x 5$\frac{5}{16}$" long)	Fixing support plate to cross-member and front bumper	5	215207	
46	Bolt ($\frac{5}{16}$" x $\frac{11}{16}$" long)		5	237158	
47	Plain washer		5	2550	
48	Spring washer		10	3075	
49	Nut ($\frac{5}{16}$")		10	2828	
50	Propeller shaft for front winch		1	219108	
51	Plunger spring	For propeller shaft	2	55742	
52	Plunger		2	219093	
53	Dust cover		2	219080	
54	Driving shaft for front winch		1	269162	
55	WINCH SHAFT HOUSING ASSEMBLY		1	219793	
56	Stud for support plate ..		2	212104	
57	Bush for winch driving shaft		1	219104	
58	Bush for control shaft ..		2	219103	
59	Support plate for winch shaft		1	236511	
60	Spring washer	Fixing housing to support plate	2	3074	
61	Nut ($\frac{1}{4}$")		2	2823	
62	Bolt ($\frac{5}{16}$" x $\frac{11}{16}$" long)	Fixing support plate to bracket on front cover	4	237158	
63	Spring washer		4	3075	
64	Nut ($\frac{5}{16}$")		4	2828	
65	Bracket for winch shaft support plate, R H		1	219074	
66	Bracket for winch shaft support plate, L.H.		1	236510	
67	Set bolt ($\frac{5}{16}$" x 2" long) fixing brackets to front cover		4	250530	
68	Driving flange for front winch		1	263356	
69	Winch driving plate		1	218549	
70	Driving flange for fan pulley		1	218653	
71	Special plug	Fixing driving flange and plate	1	218584	
72	Lock washer		1	218605	
73	Control shaft for driving flange		1	219561	
74	Selector fork for control shaft		1	219562	
75	Spring washer	Fixing fork to shaft	1	3074	
76	Nut ($\frac{1}{4}$")		1	2823	
77	Steel ball	For control shaft	1	3050	
78	Spring		1	211382	
79	Plug for spring		1	219101	
80	Grease nipple for control shaft		1	219696	
81	Clevis complete	Fixing control rod to shaft	1	215809	
82	Locknut ($\frac{5}{16}$")		1	2828	
83	Split pin		1	2392	
84	Control rod for winch		1	219557	
	Spring for control rod		1	212943	
	Plain washer for spring		2	2251	
85	Eyebolt for winch control rod		1	219559	
86	Spring washer	Fixing eyebolt to winch support plate	1	3074	
87	Nut ($\frac{1}{4}$")		1	2823	

cardiagn.com

FRONT CAPSTAN WINCH

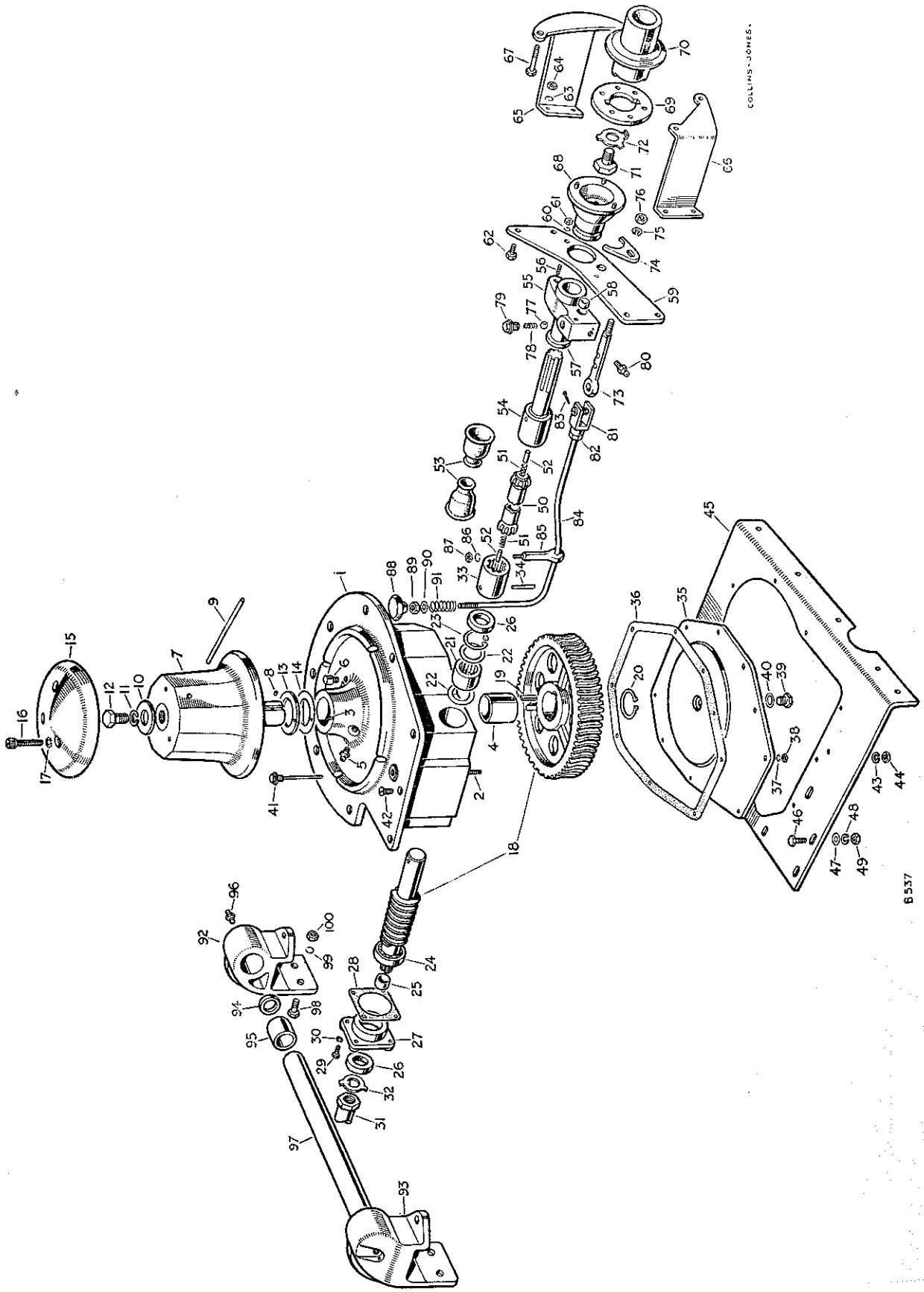

PLATE REF.
88
89
90
91
92
93
94
95
96
97
98
99
100

cardiagn.com

FRONT CAPSTAN WINCH

PLATE REF.	1 2 3 4 DESCRIPTION	Qty.	Part No.	REMARKS
88	Knob for control rod	1	219558	
89	Locknut (3/8") for knob	1	2827	
90	Plain washer for spring	2	2251	
91	Spring for control rod	1	212943	
92	ROPE GUIDE BRACKET ASSEMBLY R.H.	1	219577	
93	ROPE GUIDE BRACKET ASSEMBLY L.H	1	219576	
94	Thrust washer	2	219241	
95	Bush for guide bar	2	219237	
96	Grease nipple for bush	2	219696	
97	Guide bar for winch rope	1	219214	
	Bolt (3/8" x 1" long) } Fixing rope	2	250539	
98	Bolt (3/8" x 1 1/8" long) } guide to support	4	215272	
99	Spring washer } plate and	6	3076	
100	Nut (3/8") } front bumper	6	2827	
	Starting handle	1	234402	
	CHASSIS FRAME ASSEMBLY	1	219794	R.H.D.*
	CHASSIS FRAME ASSEMBLY	1	219795	L.H.D.*
	Tube for cross-member No. 2	5	219743	
	Front bumper complete	1	219796	**

* Standard chassis frames (check vehicle number for type required) converted by adding distance tubes Part No. 219743 to cross-member No. 2.

** Standard front bumper converted by drilling additional holes

cardiagn.com

OIL COOLER

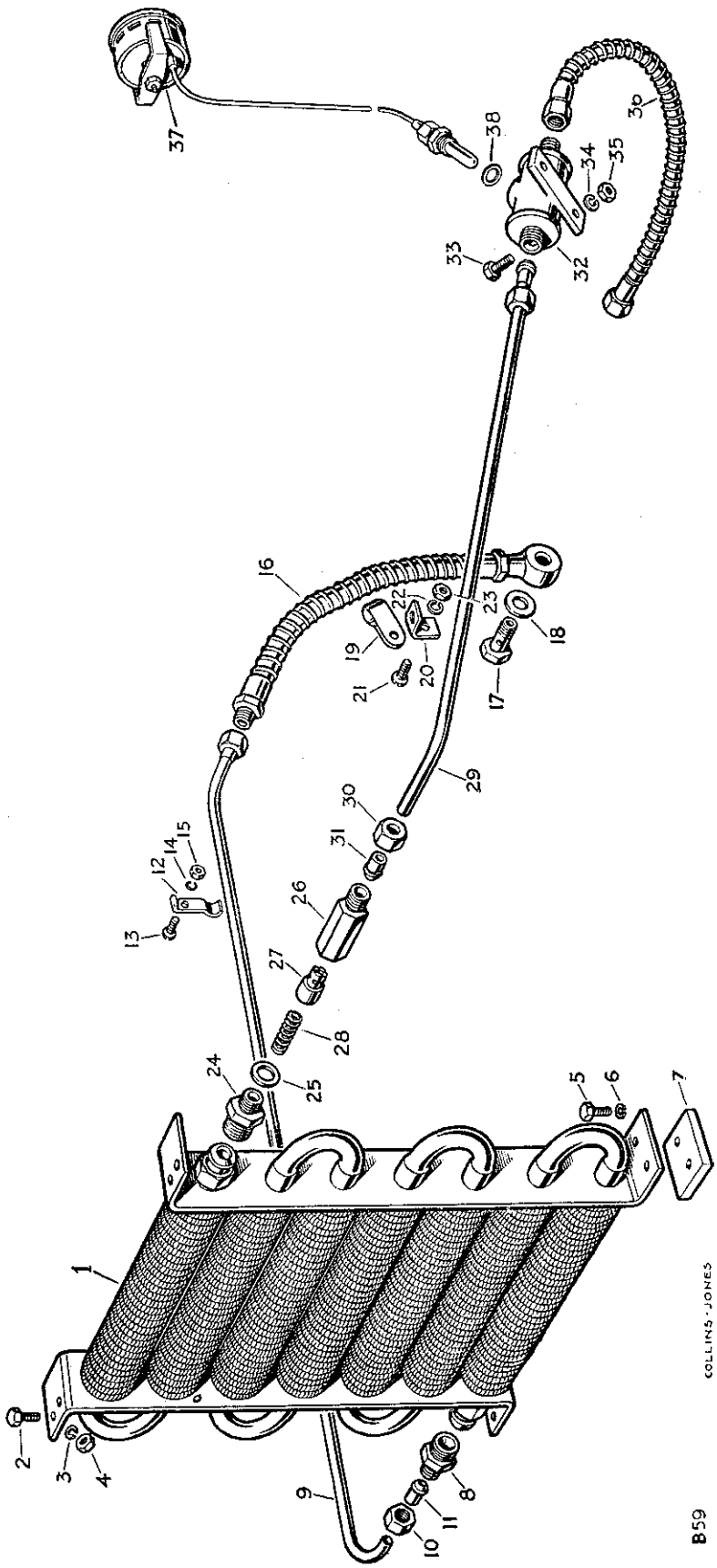

PLATE REF.	
1	
2	
3	
4	
5	
6	
7	
8	
9	
10	
11	
12	
13	
14	
15	
16	
17	
18	
19	
20	
21	
22	
23	
24	
25	
26	
27	
28	
29	
30	
31	
32	
33	
34	
35	
36	
37	
38	

carlibrary.com

OIL COOLER

PLATE REF.	1 2 3 4 DESCRIPTION	Qty.	Part No.	REMARKS
	OIL COOLER COMPLETE ASSEMBLY	1	261838	Engines numbered 860001 to 16102271 and 16131648
	OIL COOLER COMPLETE ASSEMBLY	1	262104	Engines numbered 16102272 and 16131649 onwards
1	Oil cooler complete	1	232212	
2	Bolt ($\frac{1}{4}$" x $\frac{9}{16}$" long) } Fixing	4	215756	
3	Spring washer } oil cooler	4	3074	
4	Nut ($\frac{1}{4}$") } to radiator	4	2823	
5	Set bolt ($\frac{1}{4}$" x $\frac{9}{16}$" long) } Fixing oil cooler	4	237139	
6	Spring washer } to frame	4	3074	
7	Tapping plate for oil cooler	2	232231	
8	Union for oil return pipe	1	232141	
9	Oil return pipe complete	1	232346	
10	Union nut } For oil	2	2338	
11	Nipple } return pipe	2	2337	
12	Clip for oil return pipe	1	216708	
13	Screw (2 B.A. x $\frac{1}{2}$" long) }	1	71164	
14	Spring washer } Fixing clip	1	3073	
15	Nut (2 B.A.) }	1	2247	
16	Flexible oil pipe, return to sump	1	232180	
17	Banjo centre } Fixing flexible	1	232349	
18	Joint washer } pipe to sump	2	232042	
19	Clip for flexible pipe	1	50690	
20	Bracket for clip	1	232351	
21	Screw (2 B.A. x $\frac{1}{2}$" long) }	1	71164	
22	Spring washer } Fixing clip	1	3073	
23	Nut (2 B.A.) }	1	2247	
	OIL RELIEF VALVE ASSEMBLY	1	232145	
24	Oil union }	1	232141	
25	Joint washer for union }	1	231577	
26	Body } For oil relief valve	1	232143	
27	Plunger }	1	232144	
28	Spring for plunger }	1	232142	
29	Oil pipe complete to relief valve	1	232344	
30	Union nut } For oil	2	2338	
31	Nipple } pipe	2	2337	
32	Thermometer pocket complete	1	232339	
33	Bolt (2 B.A. x $\frac{7}{16}$" long) } Fixing	2	234603	
34	Spring washer } pocket to	2	3073	
35	Nut (2 B.A.) } wing valance	2	2247	
36	Flexible oil pipe, pump to pocket	1	232181	
37	Oil temperature gauge	1	232341	
38	Joint washer for gauge union	1	231577	

cardiagn.com

OIL COOLER

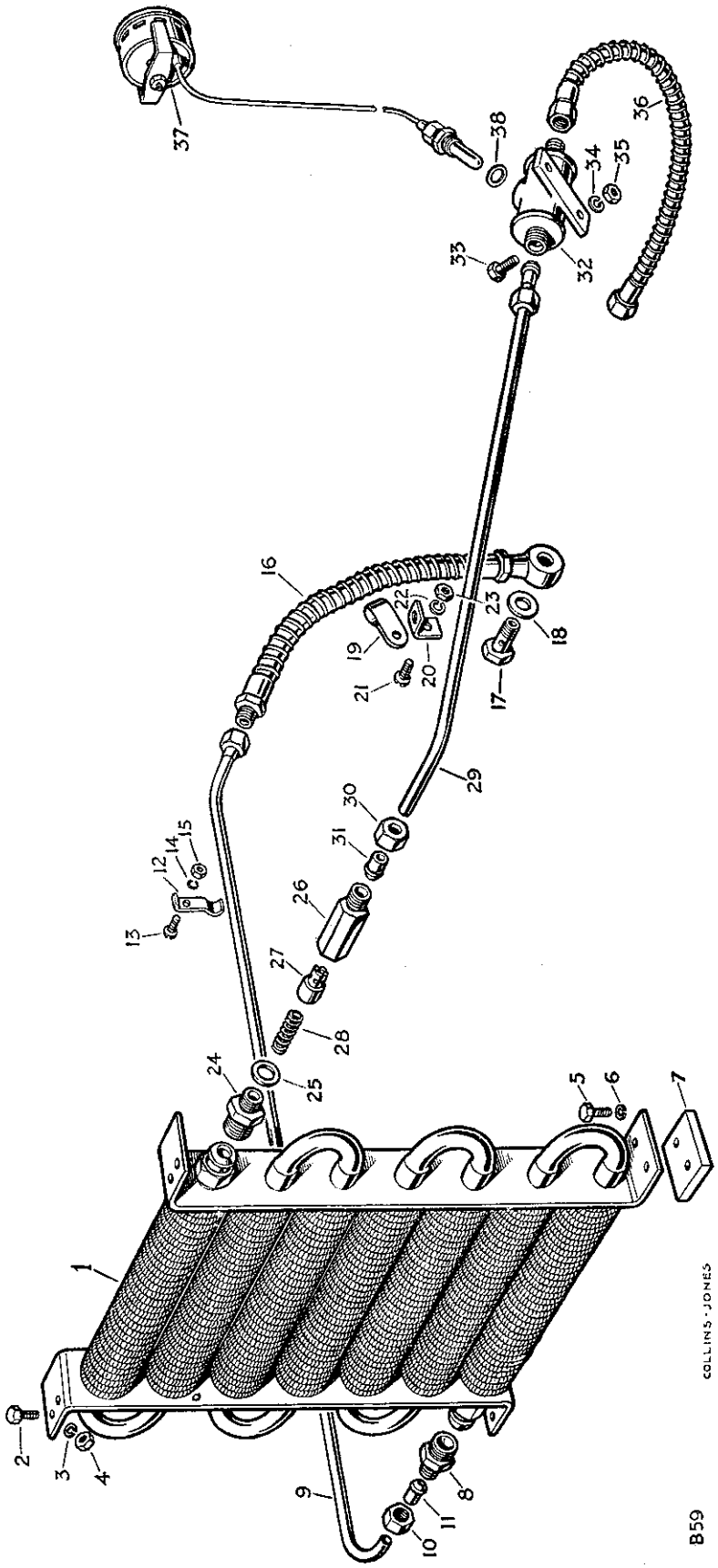
1
2
3
4
5
6
7
8
9
10
11
12
13
14
15
16
17
18
19
20
21
22
23
24
25
26
27
28
29
30
31
32
33
34
35
36
37
38
COLLINS-JONES
B59

OIL COOLER

PLATE REF. 1 2 3 4	DESCRIPTION	Qty.	Part No.	REMARKS
	OIL PUMP ASSEMBLY	1	214997	
	OIL PUMP BODY ASSEMBLY	1	212373	
	Bush for drive shaft	1	212309	
	Oil pump shield	1	09225	
	Oil pump gear, driver	1	214996	
	OIL PUMP COVER ASSEMBLY	1	214991	
	Dowel locating body	2	52710	
	Spindle for idler wheel	1	214992	
	Self-locking nut ($\frac{3}{8}$") fixing spindle	1	50526	Engines numbered 860001 to 16102271 and 16131648.
	OIL PUMP IDLER GEAR ASSEMBLY	1	214994	These items replace similar parts in the standard Spare
	Bush for idler gear	1	214995	Parts List. They must be fitted when the Oil Cooler
	Bolt ($\frac{5}{16}$" x $2\frac{11}{16}$" long) Fixing cover	4	215181	is used.
	Self-locking nut ($\frac{5}{16}$") to body	4	50525	
	Special set screw locating pump	1	232182	
	Adjusting screw For oil pump	1	232245	
	Spring relief valve	1	232244	
	Oil sump filter complete	1	232350	
	Fan complete	1	245654	
	Radiator block complete	1	242398	
	Cowl for radiator block	1	261881	
	Filler cap for radiator (15 lbs.)	1	232953	
	Oil pump gear, driver	1	214996	
	OIL PUMP COVER ASSEMBLY	1	234297	
	Dowel locating body	2	52710	
	Spindle for idler wheel	1	234307	
	Castle nut ($\frac{3}{8}$") fixing spindle	1	251602	
	Split pin for nut	1	2556	
	OIL PUMP IDLER GEAR ASSEMBLY	1	214994	
	Bush for idler wheel	1	214995	Engines numbered 16102272 and 16131648 onwards.
	Special bolt	4	234838	These items replace similar parts in the standard Spare
	Castle nut ($\frac{5}{16}$") Fixing oil pump cover	4	251601	Parts List. They must be fitted when the Oil Cooler
	Split pin	4	2555	is used.
	Split pin fixing strainer	1	2422	
	Crankcase sump	1	241156	
	Special set screw locating pump	1	232182	
	Adjusting screw For oil pump	1	232245	
	Spring relief valve	1	232244	
	Fan complete	1	245654	
	Radiator block complete	1	242398	
	Cowl for radiator block	1	261881	
	Filler cap for radiator (10 lbs.)	1	242399	

cardiagn.com

VEHICLE HEATER

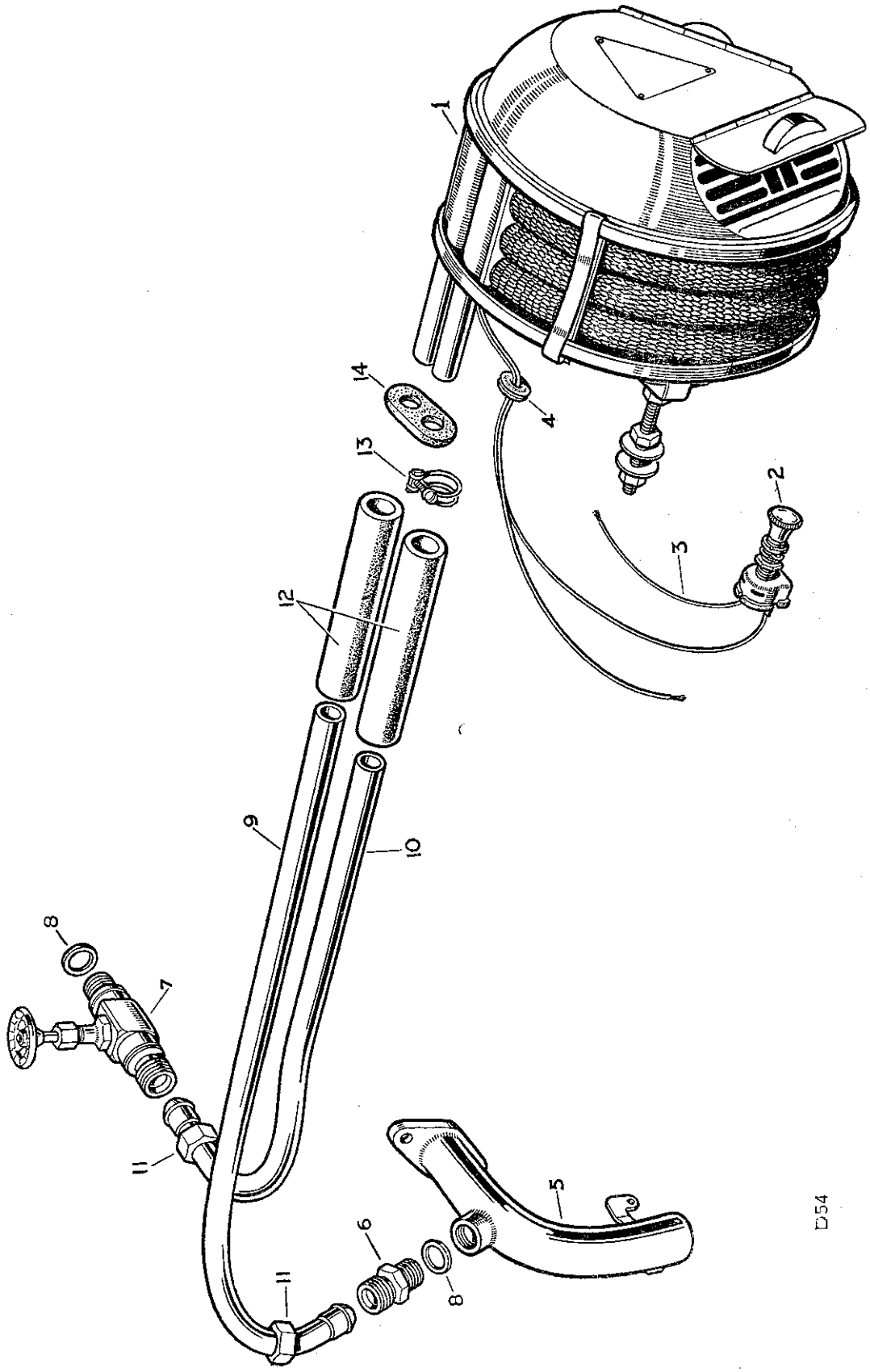

PLATE REF.
1
2
3
4
5
6
7
8
9
10
11
12
13
14

cardiagn.com

VEHICLE HEATER

PLATE REF.	1 2 3 4 DESCRIPTION	Qty.	Part No.	REMARKS
	HEATER UNIT COMPLETE ASSEMBLY	1	263093	Vehicles numbered 860001 to 36100133, 36130224 and 36160090
1	Heater unit complete	1	262680	
	Spring clip for heater	4	260836	
2	Switch for heater	1	75298	
3	Feed wire for heater	1	301298	
4	Rubber grommet for wire	1	70742	
5	Inlet pipe for water pump	1	231832	
6	Reducing union for heater outlet pipe	1	213276	
7	Valve for heater water supply	1	214264	
8	Joint washer for union and valve	2	213961	
9	Water outlet pipe complete	1	231833	
10	Water inlet pipe complete	1	231835	
11	Union nut fixing pipes	2	213275	
12	Hose for water pipes	2	231837	
13	Clip for hose	4	50306	
14	Rubber grommet for water pipes	1	75263	
	Thermostat housing assembly	1	212379	
	Plug, small } Blanking thermostat	1	3088	
	Fibre washer } housing	1	3055	
	HEATER UNIT COMPLETE ASSEMBLY WITH DEMISTER	1	262681	Vehicles numbered 36100134, 36130225 and 36160091 onwards
	HEATER UNIT ASSEMBLY	1	263093	
	HEATER UNIT COMPLETE	1	262680	
	Heater only	1	302671	
	Handle for heater door	2	305533	
	Mounting plate for heater	1	302678	
	Plain washer } Fixing plate	4	2251	
	Nut ($\frac{3}{8}$") } to dash	4	2827	
	Drive screw for earth lead	1	72626	
	Rubber grommet for wire	1	70742	
	Blanking cap	1	302672	Not required when demister is fitted
	Special nut } Fixing blanking	2	304098	
	Drive screw } off cap	2	304099	
	Switch for heater	1	75298	
	Feed wire for heater	1	301298	
	Inlet pipe for water pump	1	231832	
	Joint washer for inlet pipe	1	213724	
	Reducing union for heater outlet pipe	1	213276	
	Valve for heater water supply	1	214264	
	Joint washer for union and valve	3	213961	
	Water outlet pipe complete	1	231833	
	Water inlet pipe complete	1	231835	
	Union nut fixing pipes	2	213275	
	Hose for water pipes	2	231837	
	Clip for hose	4	50306	
	Rubber grommet for pipes	1	75263	
	Thermostat housing assembly	1	212379	

SEE ALSO PAGE 55

cardiagn.com

WINDSCREEN VENTILATOR

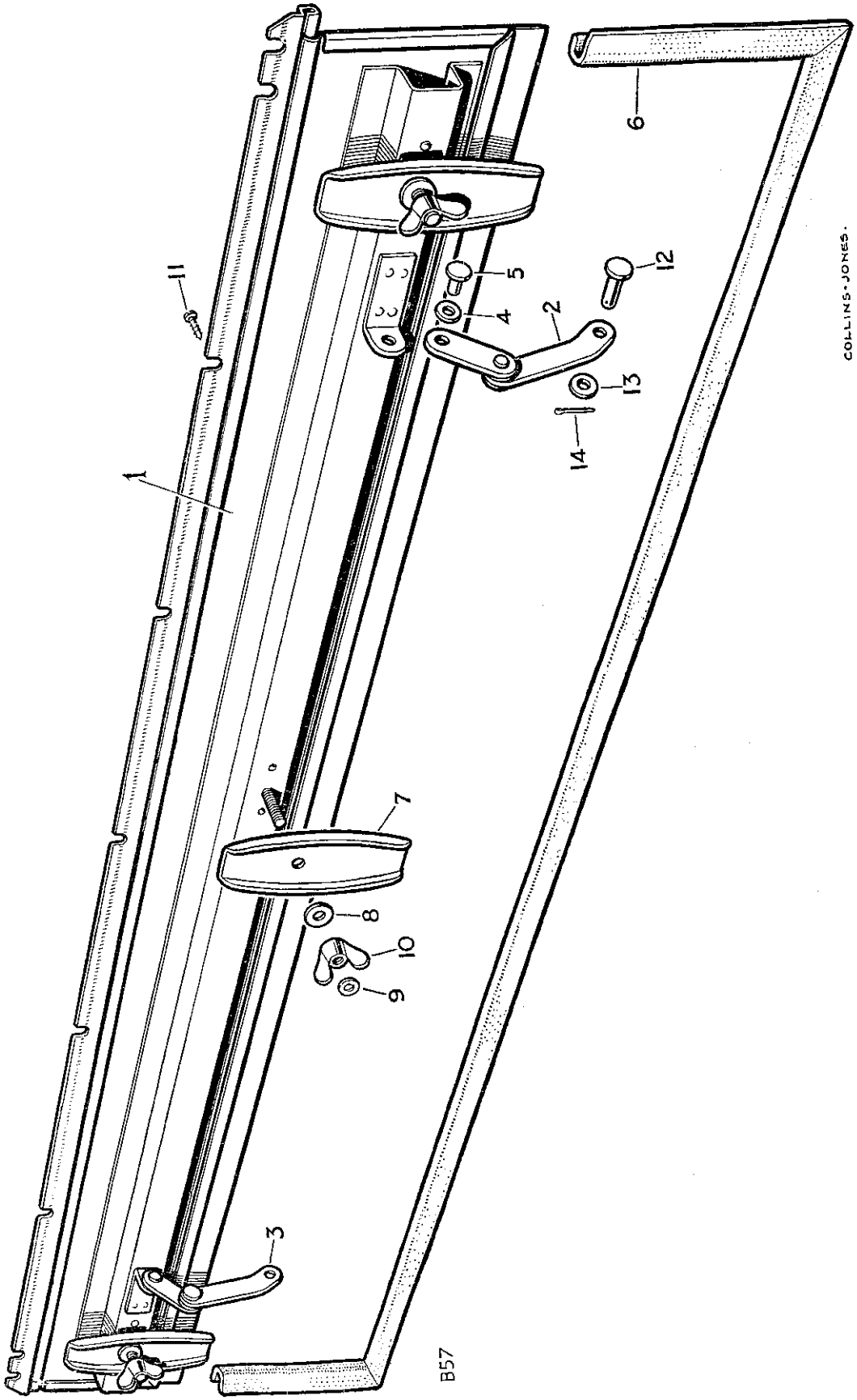

cardiagn.com

WINDSCREEN VENTILATOR

PLATE REF.	1 2 3 4 DESCRIPTION	Qty.	Part No.	REMARKS
	WINDSCREEN VENTILATOR COMPLETE ASSEMBLY	1	232974	
1	WINDSCREEN VENTILATOR ASSEMBLY	1	301438	
2	Cranked link for ventilator R.H	1	301924	
3	Cranked link for ventilator L.H	1	301453	
4	Plain washer } Fixing link	2	3840	
5	Rivet } to panel	2	3863	
6	Weather strip for ventilator	1	301446	
7	Clamp for ventilator panel	3	301457	
8	Plain washer, large }	3	3840	
9	Plain washer, small } Fixing clamp	3	3864	
10	Wing nut }	3	301074	
11	Drive screw fixing ventilator screen	7	77704	
12	Joint pin }	2	301456	
13	Plain washer } Fixing link to dash	2	3851	
14	Split pin }	2	2388	

VEHICLE HEATER

	Plug } Blanking thermostat	1	3088	Vehicles numbered 36100134, 36130225 and 36160091 onwards
	Fibre washer } housing	1	3055	
	DEMISTER KIT ASSEMBLY	1	263098	
	"Y" piece for demister tubes	1	302673	
	Tube for demister R.H	1	302676	
	Tube for demister L.H	1	302677	
	Clip for L.H. tube	1	302679	
	Set screw ($\frac{1}{4}''$ x $\frac{1}{2}''$ long) } Fixing	1	78003	
	Spring washer } clip	1	3074	
	Nozzle for demister R.H.	1	302674	
	Nozzle for demister L.H.	1	302675	
	Drive screw fixing nozzle	4	77789	

cardiagn.com

REAR SEATS

EXPORT ONLY

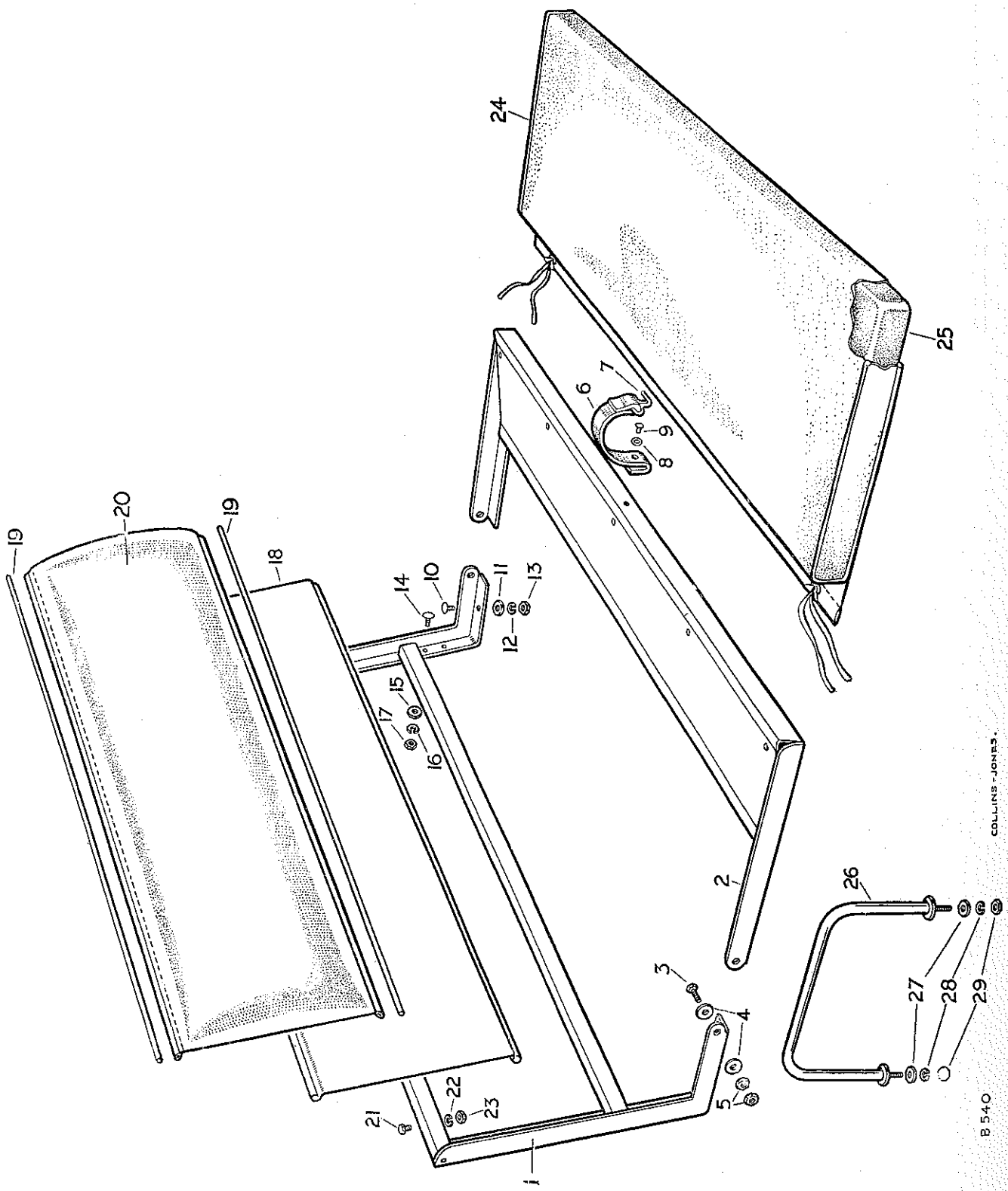

PLAT REF	
1	
2	
3	
4	
5	
6	
7	
8	
9	
10	
11	
12	
13	
14	
15	
16	
17	
18	
19	
20	
21	
22	
23	
24	
25	
26	
27	
28	
29	

www.vintagemgcars.com

REAR SEATS

EXPORT ONLY

PLATE REF.	1 2 3 4 DESCRIPTION	Qty.	Part No.	REMARKS
	REAR SEAT COMPLETE ASSEMBLY	2	238348	
	REAR SEAT FRAME COMPLETE ASSEMBLY	2	301469	
1	Rear seat back frame	2	301488	
	Clamp bracket	4	301494	
	Plain washer } Fixing bracket	8	3821	
	Rivet } to back frame	4	3865	
2	Hinged base for rear seat	2	301489	
3	Bolt ($\frac{1}{4}''$ x $\frac{21}{32}''$ long) } Fixing	4	218552	
4	Plain washer } base to	12	3821	
5	Nut ($\frac{1}{4}''$) } back frame	4	2823	
	Seat strap complete, $8\frac{1}{2}''$ strap	2	301498 } Alternative	
6	Seat strap complete, $9\frac{1}{2}''$ strap	2	302648 } Alternative	
7	Hook for strap	2	301005	
8	Plain washer } Fixing strap to	4	3816	
9	Pop rivet } hinged base	2	300782	
10	Special bolt }	4	301502	
11	Plain washer } Fixing seat frame	4	3821	
12	Spring washer } to wheel arch box	4	3074	
13	Nut ($\frac{1}{4}''$) }	4	2823	
14	Bolt ($\frac{1}{4}''$ x $\frac{3}{4}''$ long) }	4	237141	
15	Plain washer } Fixing seat frame to	4	3821	
16	Spring washer } body side cappings	4	3074	
17	Nut ($\frac{1}{4}''$) }	4	2823	
	REAR SEAT BACK REST TRIMMED ASSEMBLY	2	304352	
18	Back rest panel	2	301470	
19	Retaining rod for pad	2	301476	
20	Pad for back rest	2	302647	
21	Bolt ($\frac{1}{4}''$ x $\frac{9}{16}''$ long) } Fixing	12	237139	
22	Spring washer } back rest	12	3074	
23	Nut ($\frac{1}{4}''$) } to frame	12	2823	
24	REAR SEAT CUSHION ASSEMBLY	2	304353	
25	Pad for rear cushion	2	302655	
26	Guard rail for rear seats	2	301500	
27	Plain washer } Fixing	4	2249	
28	Spring washer } rail to	4	3075	
29	Nut ($\frac{5}{16}''$) } corner bracket	4	2828	

cardiagn.com

WATER TEMPERATURE AND OIL PRESSURE GAUGE AND UNIVERSAL JOINT COVER PLATES

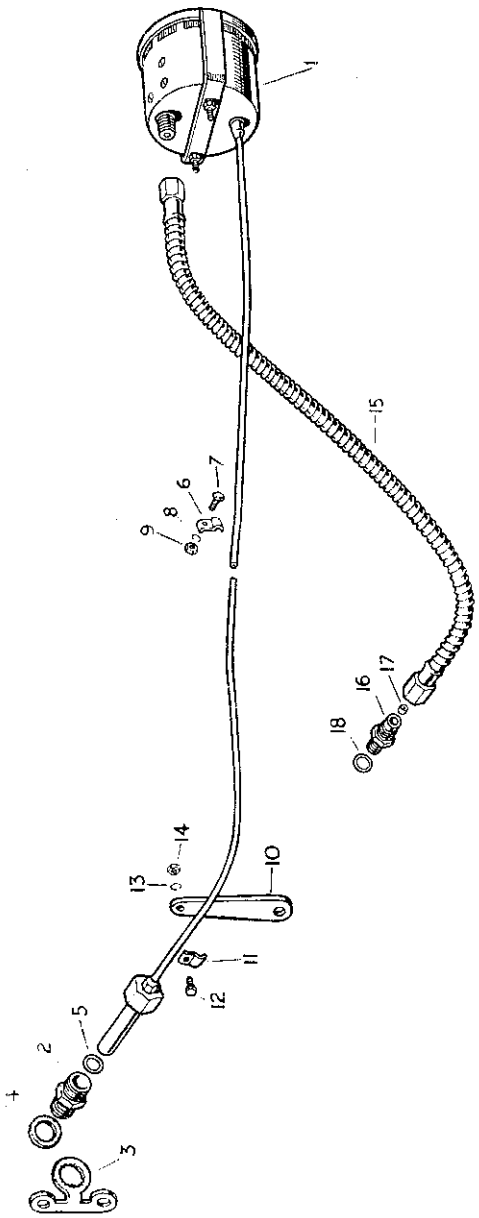

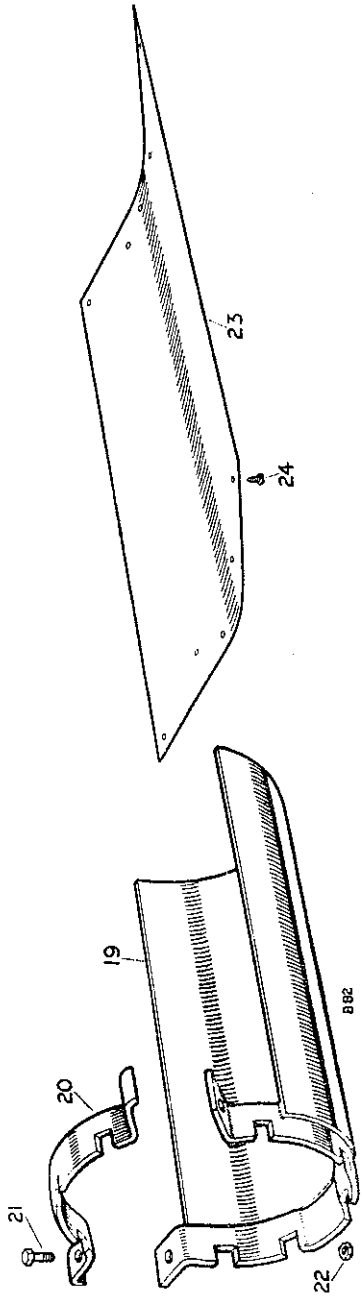

PLATE REF.	W
1	
2	
3	
4	
5	
6	
7	
8	
9	
10	
11	
12	
13	
14	
15	
16	
17	
18	

PLATE REF.	U
19	
20	
21	
22	
23	
24	

cardiagn.com

WATER TEMPERATURE AND OIL PRESSURE GAUGE

PLATE REF. 1 2 3 4	DESCRIPTION	Qty.	Part No.	REMARKS
	WATER TEMPERATURE AND OIL PRESSURE GAUGE COMPLETE ASSEMBLY	1	262152	
1	Water temperature and oil pressure gauge	1	233480	
2	Union for thermometer bulb	1	218512	
3	Locker for union	1	217321	
4	Washer for union	1	3055	
5	Washer for thermometer bulb	1	218751	
6	Clip for thermometer pipe	2	41379	
7	Screw (2 B.A x ½″ long) } Fixing clips	2	71164	
8	Spring washer } Fixing clips	2	3073	
9	Nut (2 B.A) } Fixing clips	2	2247	
10	Bracket supporting thermometer pipe	1	234059	
11	Clip for pipe	1	41379	
12	Screw (2 B.A. x ½″ long) } Fixing clip	1	71164	
13	Spring washer } Fixing clip	1	3073	
14	Nut (2 B.A) } Fixing clip	1	2247	
15	Oil pipe for gauge	1	240730	
16	Double-ended union complete	1	265087	
17	Meter plug for adaptor	1	212023	
18	Washer for union	1	232039	
	Thermostat housing assembly	1	212379	
	Plug, large } Blanking heater tapping in housing	1	10713	
	Fibre washer } Blanking heater tapping in housing	1	213961	

UNIVERSAL JOINT COVER PLATES

PLATE REF. 1 2 3 4	DESCRIPTION	Qty.	Part No.	REMARKS
	UNIVERSAL JOINT COVER PLATE COMPLETE ASSEMBLY	1	261829	
19	Cover plate for joint at differential housings	2	233071	
	Cover plate for joint at differential housings	2	243547	Only required when an Oil Cooler is fitted
20	Top strap for cover plate	2	233068	
21	Bolt (¼″ x 13/16″ long) } Fixing cover plates to differential housings	4	215055	
22	Nut (¼″) } Fixing cover plates to differential housings	4	2823	
23	Shield for joint at transfer box	1	236007	
24	Drive screw fixing shield	10	77926	
	Bolt (2 B A x 7/16″ long) } Fixing shield	2	234603	
	Spring washer } Fixing shield	2	3073	Alternative fixing. Check before ordering
	Nut (2 B A.) } Fixing shield	2	2247	
	Drive screw } Fixing shield	2	77926	

cardiagn.com

TOWING ATTACHMENTS

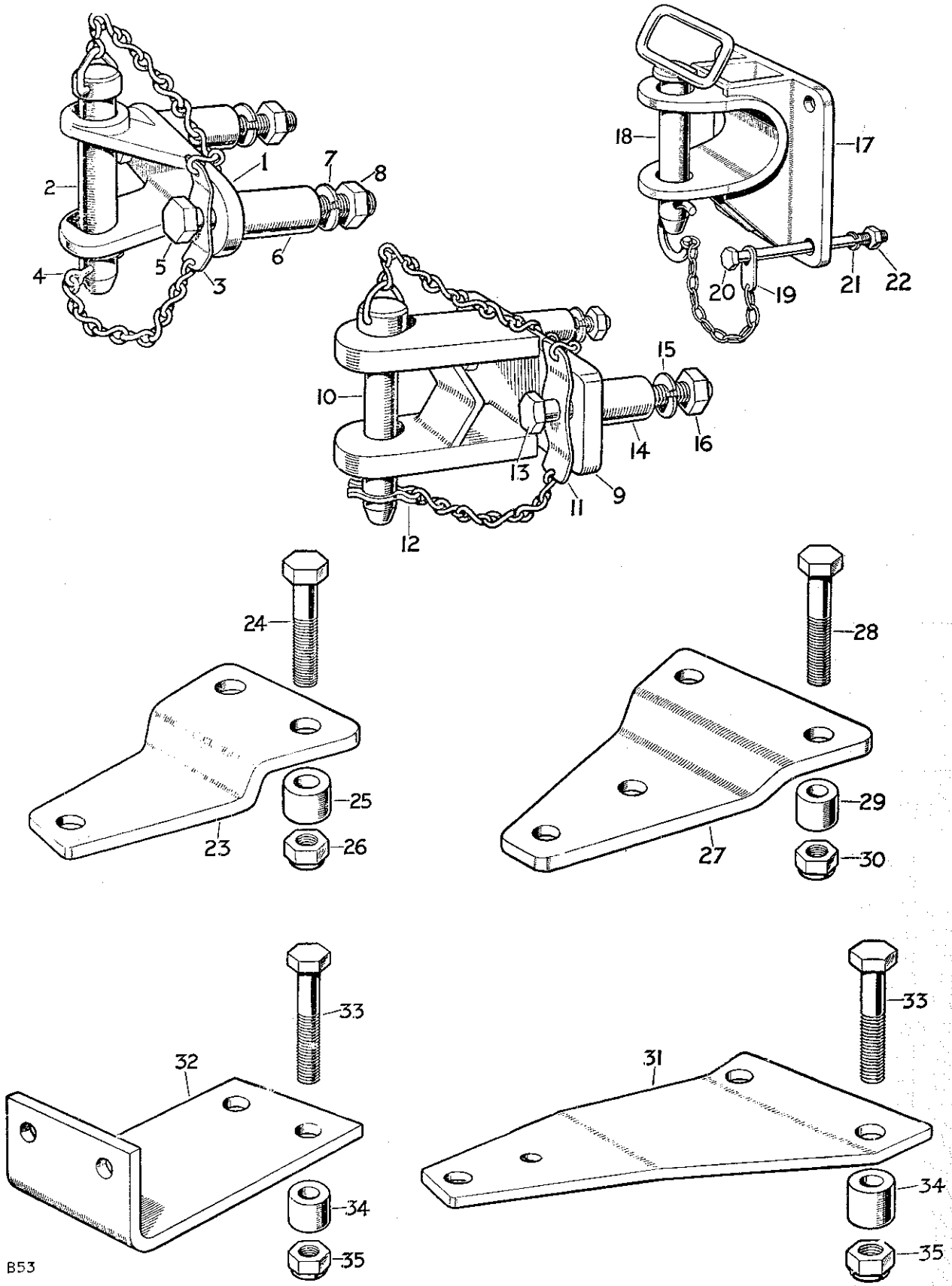

TOWING ATTACHMENTS

PLATE REF.	1 2 3 4 DESCRIPTION	Qty.	Part No.	REMARKS
	TOWING JAW COMPLETE ASSEMBLY	1	234662	
9	TOWING JAW ASSEMBLY	1	233828	
2	Pintle pin for jaw	1	219665	Angle jaw type
3	Retaining chain, complete for pin	1	219666	Angle jaw type
4	Split pin for chain	1	3836	Angle jaw type
10	Pintle pin for jaw	1	233988	Straight jaw type
11	Retaining chain complete for pin	1	233989	Straight jaw type
12	Spring clip for chain	1	235268	Straight jaw type
13	Bolt ($\frac{5}{8}$" x $3\frac{3}{4}$" long) — Fixing jaw to chassis frame	2	219667	Alternative, check before ordering
14	Distance piece — Fixing jaw to chassis frame	2	219669	Alternative, check before ordering
	Bolt ($\frac{5}{8}$" x $1\frac{3}{4}$" long) — Fixing jaw to chassis frame	2	240964	Alternative, check before ordering
15	Spring washer — Fixing jaw to chassis frame	2	3080	
16	Nut ($\frac{5}{8}$") — Fixing jaw to chassis frame	2	219668	
	TOWING JAW COMPLETE ASSEMBLY	1	231804	
	TOWING JAW ASSEMBLY	1	231711	
17	Bracket for towing jaw	1	231699	
18	Pin for towing jaw	1	230325	
19	Chain for towing jaw pin	1	231688	
20	Bolt ($\frac{3}{8}$" x $4\frac{13}{32}$" long) — Fixing jaw to chassis	4	237195	
21	Spring washer — Fixing jaw to chassis	3	3076	
22	Nut ($\frac{3}{8}$") — Fixing jaw to chassis	4	2827	
	REAR TOW PLATE ASSEMBLY	1	231213	
23	Rear tow plate	1	219684	
24	Bolt ($\frac{3}{4}$" x $2\frac{3}{4}$" long) — Fixing tow plate to rear drawbar	2	219686	
25	Distance piece — Fixing tow plate to rear drawbar	2	219685	
26	Self-locking nut ($\frac{3}{4}$") — Fixing tow plate to rear drawbar	2	50531	
	REAR TOW PLATE ASSEMBLY	1	231214	For use with combine harvester only
27	Rear tow plate	1	230123	For use with combine harvester only
28	Bolt ($\frac{3}{4}$" x $2\frac{3}{4}$" long) — Fixing tow plate to rear drawbar	2	219686	For use with combine harvester only
29	Distance piece — Fixing tow plate to rear drawbar	2	219685	For use with combine harvester only
30	Self-locking nut ($\frac{3}{4}$") — Fixing tow plate to rear drawbar	2	50531	For use with combine harvester only
31	Rear tow plate	1	230047	Only required when 6-spl ne adaptor is fitted
32	Anchor plate for towing jaw	1	231498	Only required when power take-off is fitted
33	Bolt ($\frac{3}{4}$" x $2\frac{3}{4}$" long) — Fixing towing plate to rear drawbar	2	219686	
34	Distance piece — Fixing towing plate to rear drawbar	2	219685	
35	Self-locking nut ($\frac{3}{4}$") — Fixing towing plate to rear drawbar	2	50531	

cardiagn.com

MISCELLANEOUS EXTRAS

PLATE REF. 1 2 3 4	DESCRIPTION	Qty.	Part No.	REMARKS
	Rubber pad for brake and clutch pedals	2	232126	
	Road spring complete, rear, passenger's	1	235070	These springs are 300 lb. rate and can only be used with a vehicle that is permanently loaded, i.e. Station Wagon, Air Compressor, etc. Must be supplied in sets when replacing standard springs
	Road spring complete, rear, driver's	1	237252	
	Main leaf } For rear spring	2	262648	
	Centre bolt } For rear spring	2	262649	
	"U" holt for rear springs	4	230732	
	Tyre 7.00" x 16"	5	232123	
	Inner tube 7.00" x 16"	5	232124	
	Tyre 7.00" x 16" } Dunlop "Fort"	5	233041	For desert conditions
	Inner tube 7.00" x 16" } Dunlop "Fort"	5	233042	
	Chaff guard for radiator	1	301206*	
	Chaff guard for radiator	1	302570†	
	Chaff guard for radiator	1	302569	1952
	Filler cap for radiator, 10 lbs	1	242399	
	TRAFFICATOR COMPLETE ASSEMBLY	1	261828	
	Trafficator	2	230280	
	Bulb for trafficator	2	67762	
	Set screw (2 B.A. x 1⅛" long) } For trafficator to windscreen	4	77845	Alternative to 6 lines below
	Spring washer } For trafficator to windscreen	4	3074	
	Bracket for trafficator	2	301929	Alternative to 2 lines above
	Set bolt (2 B.A. x 13/32" long) } Fixing bracket to windscreen	4	215755	
	Spring washer } Fixing bracket to windscreen	4	3073	
	Screw (2 B.A. x 1¼" long) } Fixing trafficator to bracket	4	77993	
	Spring washer } Fixing trafficator to bracket	4	3073	
	Nut (2 B.A.) } Fixing trafficator to bracket	4	2247	
	Switch for trafficator	1	230281	
	Screw (5 B.A. x ½" long) } Fixing switch to windscreen	2	76480	
	Nut (5 B.A.) } Fixing switch to windscreen	2	3280	
	Earth lead for trafficator	2	231409	
	Sleeve, red, for L.H. armoured lead	2	231429	
	Sleeve, white, for R.H. armoured lead	2	231430	
	Feed lead to switch, 15" long	1	230577	Alternative pattern, check carefully before ordering
	Armoured lead, 45" long	1	230578	
	Armoured lead, 60" long	1	230579	
	Feed lead to switch, 22" long	1	232720	
	Armoured lead, 52" long	2	233417	
	Rubber grommet for leads	3	219679	
	Cable clip fixing feed lead	2	50183	
	Cable clip for trafficator lead	2	8885	
	Drive screw fixing clip	1	77789	

* Vehicles numbered 860001 to 06111546, 8670001 to 06200311, 8680001 to 06300030

† Vehicles numbered 06111547, 06200312 and 06300031 onwards 1950-51.

cardiagn.com

MISCELLANEOUS EXTRAS

PLATE REF. 1 2 3 4	DESCRIPTION	Qty.	Part No.	REMARKS
	SUPPORT ASSEMBLY FOR SPARE WHEEL, 6″ TYRES	1	231282	
	Support for spare wheel on bonnet	1	300748	
	Rivet fixing support	9	300783	
	Clamp for spare wheel	2	300752	
	Special bolt for spare wheel clamp	2	301274	
	Split pin for bolt	2	2392	
	Rubber support block for spare wheel, side	2	301254	
	Rubber support block for spare wheel, front and rear	2	301255	
	Special screw (Fixing supports to bonnet top)	8	77869	
	Plain washer, small (Fixing supports to bonnet top)	8	3816	
	Plain washer, large (Fixing supports to bonnet top)	8	3008	
	Spring washer (Fixing supports to bonnet top)	8	3073	
	Nut (2 B.A.) (Fixing supports to bonnet top)	8	2247	
	SUPPORT ASSEMBLY FOR SPARE WHEEL, 7″ TYRES	1	231588	
	Support for spare wheel on bonnet	1	300748	
	Rivet fixing support	9	300783	
	Clamp for spare wheel	2	300752	
	Support block for clamp	1	301275	
	Drive screw fixing block	2	77892	
	Special bolt for spare wheel clamp	2	301274	
	Split pin for bolt	2	2392	
	Support block for spare wheel, side	2	301254	
	Support block for spare wheel, front and rear	2	301255	
	Special screw for support (Fixing supports to bonnet top)	8	77869	
	Plain washer, small (Fixing supports to bonnet top)	8	3816	
	Plain washer, large (Fixing supports to bonnet top)	8	3008	
	Spring washer (Fixing supports to bonnet top)	8	3073	
	Nut (2 B.A.) (Fixing supports to bonnet top)	8	2247	
	Voltage control box, suppressed	1	240909	For use with Radio set as required
	RADIO SET COMPLETE ASSEMBLY	1	302384	Medium and Long Wave
	RADIO SET COMPLETE ASSEMBLY	1	304475	Short and Medium Wave
	Radio unit complete	1	302385	Medium and Long Wave
	Radio unit complete	1	304476	Short and Medium Wave
	Vibrator	1	262671	
	Dial bulb socket	1	262832	
	Vibrator transformer	1	262833	
	Output transformer	1	262834	
	Drive cord	As required	262835	
	Wave change switch wafer	1	262836	
	Volume control	1	262821	
	Bulb for dial lamp	1	262823	
	Valve 6X4 (Check before ordering)	1	242677	
	Valve 6AT6 (Check before ordering)	1	242678	
	Valve 6BA6 (Check before ordering)	2	242679	
	Valve 6BE6 (Check before ordering)	1	242680	

cardiagn.com

MISCELLANEOUS EXTRAS

PLATE REF. 1 2 3 4	DESCRIPTION	Qty.	Part No.	REMARKS
	Valve 6K7GT	1	262816	Check before ordering
	Valve 6K8GT	1	262817	
	Valve 6Q7GT	1	262818	
	Valve 6U6GT	1	262819	
	Valve 6X5GT	1	262820	
	Valve 6AQ5	1	263097	
	Condenser 16 MFD+16 MFD+20 MFD	1	262822	
	Rear clip (Fixing unit to dash panel)	1	302375	
	Bolt ($\frac{1}{4}$" x $\frac{3}{4}$" long)	1	237139	
	Bolt ($\frac{1}{4}$" x $1\frac{1}{4}$" long)	2	235569	
	Plain washer	3	3931	
	Spring washer	3	3074	
	Nut ($\frac{1}{4}$")	3	3819	
	Tubular distance piece ($\frac{1}{2}$" long)	2	302391	
	Loudspeaker and housing	1	262837	
	Speaker complete	1	302386	
	Speaker lead	1	302389	
	Mounting clip fixing speaker to hand rail	1	302378	
	Bolt ($\frac{1}{4}$" x $\frac{3}{4}$" long) (Fixing speaker)	2	237139	
	Plain washer	2	3931	
	Spring washer	1	3074	
	Nut ($\frac{1}{4}$")	2	3819	
	Aerial complete	1	302387	
	Bracket for aerial	1	302376	R.H.D.
	Bracket for aerial	1	302377	L.H.D.
	Distance piece for aerial, $\frac{5}{16}$" hole	1	302667	
	Bolt ($\frac{5}{16}$" x $1\frac{1}{2}$" long) (Fixing aerial bracket)	1	235696	
	Bolt ($\frac{1}{4}$" x $1\frac{3}{4}$" long)	1	235570	
	Tubular distance piece ($\frac{3}{4}$" long) $\frac{1}{4}$" hole	1	302392	
	Fuse, 5 amp	1	262234	
	L.T. lead	1	302388	
	Cable clip (Fixing L.T. lead)	1	235564	
	Drive screw	1	77704	
	Grommet for L.T. lead	1	70742	
	Aerial lead	1	302390	
	Clip fixing aerial lead	5	302403	
	Condenser	2	235567	
	Resister	1	213646	
	Bonding strip, coil body to engine	1	235568	
	Sump conversion kit	1	262244	Engines numbered 860001 to 16102271 and 16131648 Shallow strengthened sump
	Oil sump	1	233444	
	Oil pump assembly	1	234310	
	Oil pump drive shaft	1	234288	
	Strainer (Oil strainer)	2	52182	
	Distance piece	1	52181	
	Cup washer	1	52189	
	Nut	1	251600	
	Split pin	1	2422	
	Driving dog for distributor	1	59050	
	Taper pin fixing dog	1	3005	
	Dipstick	1	233460	
	Joint washer for sump	1	09067	
	Skid chains, set	1	262247	6" tyres only

cardiagn.com

MISCELLANEOUS EXTRAS

PLATE REF. 1 2 3 4	DESCRIPTION	Qty.	Part No.	REMARKS
	Floor mat, driver's	1	262249	R.H.D.
	Floor mat, driver's	1	262250	L.H.D.
	Floor mat, passenger's	1	262251	R.H.D.
	Floor mat, passenger's	1	262252	L.H.D.
	Floor mat, rear body with spare wheel in back	1	262253	
	Floor mat, rear body with spare wheel on bonnet	1	262254	
	Flag staff	1	261965	
	Rubber tube for bleeding brakes	1	261844	
	Condenser, coil, dynamo, pump and wiper motor	4	50693	Radio interference suppressors
	Resister for distributor lead	1	213646	Radio interference suppressors
	Suppressor for sparking plug	4	240138	Radio interference suppressors
	Terminal for fuel pump and coil	2	232990	Radio interference suppressors
	Terminal for dynamo	1	232991	Radio interference suppressors
	"Cool-ride" pad for seats	1	302526	
	Speedometer to show tenths of a mile	1	262642	
	Gasket set, decarbonising	1	261407	1948-51
	Gasket set, decarbonising	1	262102	1952-53
	Foot support complete, for accelerator pedal	1	301295	R.H.D.
	Rubber pad for support	1	12374	R.H.D.
	Drive screw fixing support to dash	4	77704	R.H.D.
	Wrench for winch bollard screw	1	237255	Front and rear winch only
	Wheel brace, divided rim wheels	1	237421	
	Cylinder liner, shaped	4	239061	1948-51
	Cylinder liner, shaped	4	239420	1952-53
	Windscreen wiper motor, complete	1	231553	Can be used as an Extra on all models 1948-53
	Chrome starter arm	1	261836	Can be used as an Extra on all models 1948-53
	Special screw fixing arm	1	261837	Can be used as an Extra on all models 1948-53
	Arm for wiper blade	1	261503	Can be used as an Extra on all models 1948-53
	Wiper blade	1	261504	Can be used as an Extra on all models 1948-53
	Drive screw earthing wiper motor	1	72626	Can be used as an Extra on all models 1948-53
	Feed and earth lead	1	237521	Can be used as an Extra on all models 1948-53
	Clip for feed lead	2	3887	Can be used as an Extra on all models 1948-53
	Drive screw fixing clip	2	72626	Can be used as an Extra on all models 1948-53
	Carburetter gasket set	1	274895	

cardiagn.com

LAND-ROVER

FIRE TENDER

GENERAL EXPLANATION

The Fire Tender is mounted on a standard Land-Rover chassis and body, and the spare parts are, therefore, the same as those required for the basic model. The following pages, 68 to 77 inclusive, list the parts which are peculiar to the Fire Tender.

The Extras and additional equipment listed below are also required:—

Centre power take-off	Listed on Pages 23 and 25		*Section III*
Spare wheel carrier on bonnet, 7″ tyres	Listed on Page 63		*Section III*
15 lbs. pressure radiator cap	Listed on Page 62		*Section III*
Dunlop 7″ tyres and tubes	Listed on Page 99—*Section II*		
Truck cab	Listed on Pages 17 and 19—*Section III* (Optional extra)		
Engine governor	Listed on Pages 35-37—*Section III*		
	LESS Operating rod	1	219503
	Ball joint	2	219065
Oil cooler	Listed on Pages 49 and 51—*Section III*		
	LESS Oil gauge	1	232341

All parts normally painted Green are painted Red.

All Seats are trimmed in Red.

Trim on Side Screens and Webbing for Petrol tank lid strap are normal colour.

cardiagn.com

FIRE TENDER

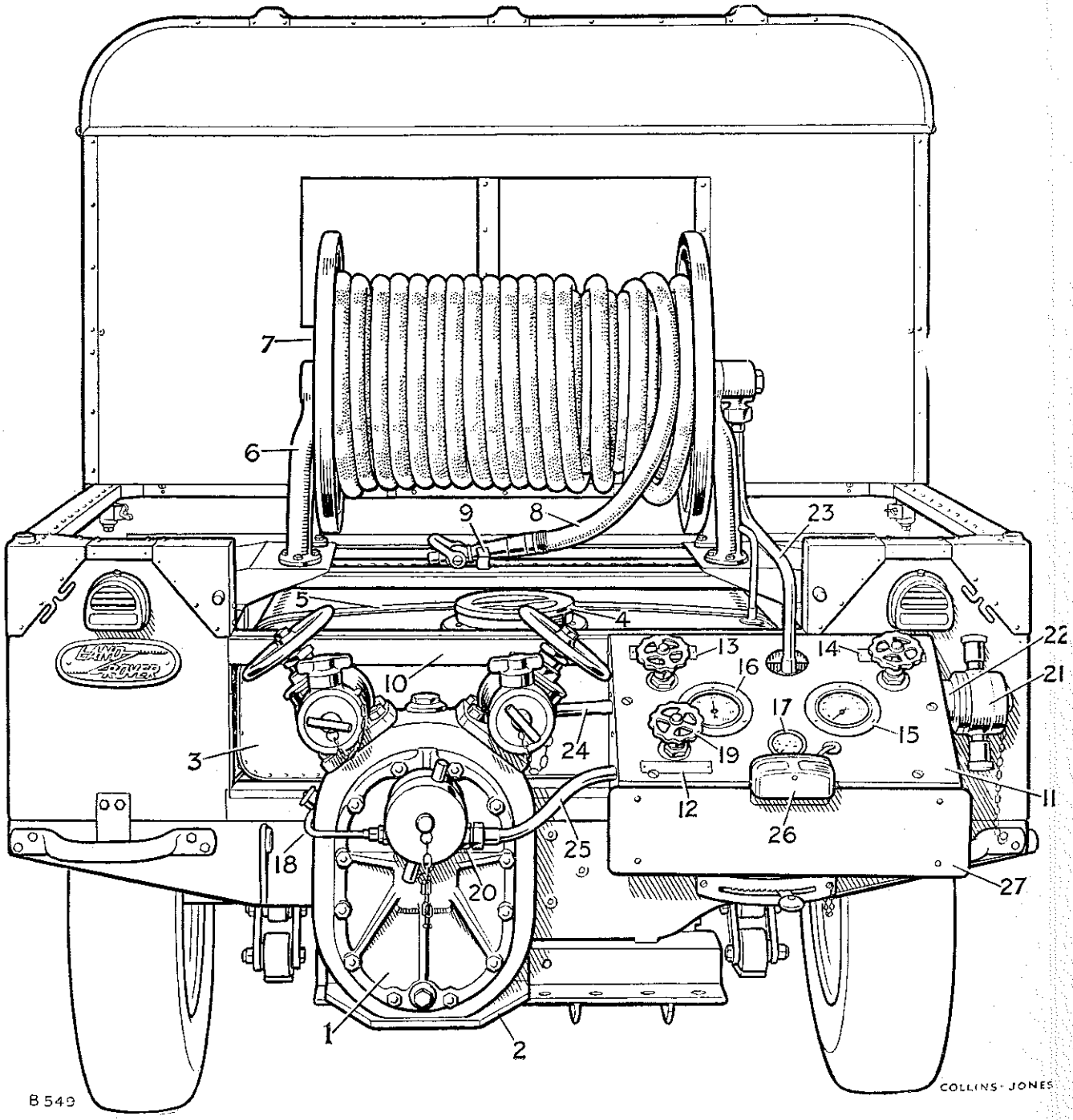

cardiagn.com

FIRE TENDER

PLATE REF.	1 2 3 4 DESCRIPTION		Qty.	Part No.	REMARKS
1	Pump complete		1	237856	
	Bolt (3/8" x 4 3/4" long)	Fixing pump to chassis	3	237348	
	Plain washer, small		3	2851	
	Plain washer, large		3	3988	
	Spring washer		3	3076	
	Nut (3/8")		3	2827	
2	Support plate for pump		1	232646	
	Set bolt (3/8" Whit. x 1" long)	Fixing support plate to pump	2	215703	
	Spring washer		2	3076	
	Shim		As required	237551	
	Bolt (3/4" x 2 1/8" long)	Fixing support plate to towing plate	4	239906	
	Plain washer		8	3299	
	Self-locking nut (3/4")		4	50531	
3	Water tank complete		1	303605	
4	Filler cap for water tank		1	303611	
	Body for filter		1	303609	
	Filter for water tank		1	303610	
	Bolt (1/4" x 1 1/8" long)	Fixing filter body to water tank	6	237144	
	Plain washer		6	3840	
	Spring washer		6	3074	
	Nut (1/4")		6	3819	
	Rubber pad for water tank		4	303661	
5	Strap fixing water tank		4	303612	
	Bolt (1/4" x 1/2" long)	Fixing strap to wheelarch	8	237139	
	Spring washer		8	3074	
	Nut (1/4")		8	2823	
	Special bolt	Fixing strap ends	2	303632	
	Nut (5/16")		2	3490	
6	Support for hose reel		1	303619	
	Bolt (3/8" x 7/8" long)	Fixing support	12	237178	
	Spring washer		12	3076	
	Nut (3/8")		12	2827	
7	Hose reel complete		1	243234	
8	Hose complete with nozzle		1	303618	
	Bolt (3/8" x 1 1/8" long)	Fixing hose reel to support	12	237180	
	Spring washer		12	3076	
	Nut (3/8")		12	2827	
9	Clip for hose nozzle		1	72085	
	Screw (2 B.A. x 1/2" long)	Fixing clip	2	64357	
	Spring washer		2	3073	
	Tapping plate		1	311436	
10	Support for control box		1	303625	
	Bolt (1/4" x 1/2" long)	Fixing support to body	4	237139	
	Spring washer		4	3074	
	Nut (1/4")		4	2823	

cardiagn.com

FIRE TENDER

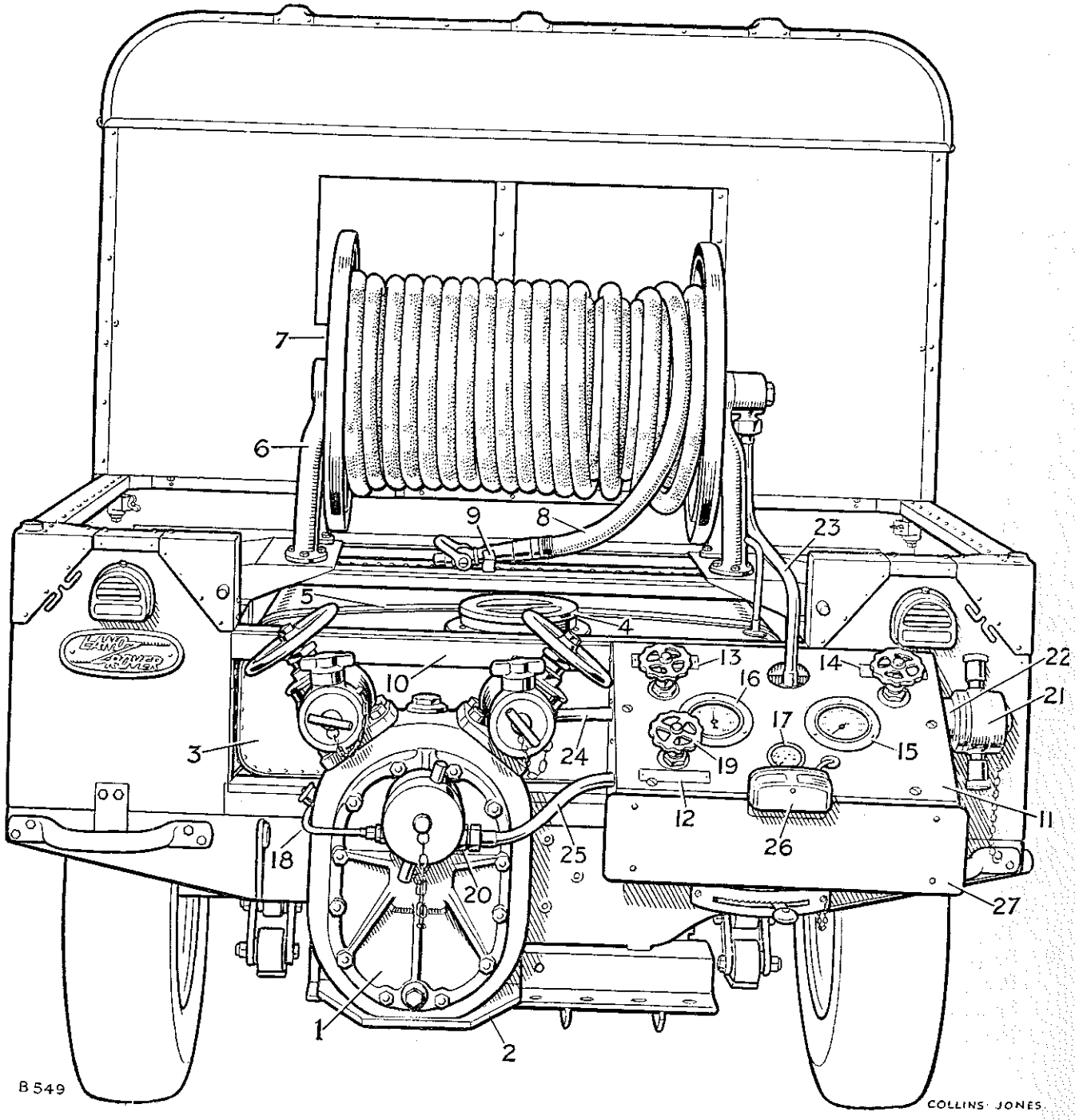
7
6
9
8
23
5
4
13
14
22
21
10
16
17
15
3
24
19
12
11
18
25
26
20
27
1
2
B 549
COLLINS · JONES

FIRE TENDER

PLATE REF.	1 2 3 4 DESCRIPTION	Qty.	Part No.	REMARKS
	Control box at rear of vehicle	1	303626	
	Bolt ($\frac{1}{4}$" x $\frac{5}{8}$" long) } Fixing	4	237140	
	Spring washer } control box	4	3074	
	Nut ($\frac{1}{4}$") } to support	4	2823	
11	Panel for control box	1	303628	
	Screw ($\frac{1}{4}$" x $\frac{3}{4}$" long) } Fixing	6	77936	
	Spring washer } panel to	6	3074	
	Plain washer } control box	6	3840	
12	Name plate, suction tank to pump	1	240034	
13	Name plate, pressure pump to first aid hose	1	240035	
14	Name plate, hydrant to first aid hose	1	240036	
	Drive screw fixing name plates	6	76833	
15	Pressure gauge 200 lbs. sq in.	1	265561	
16	Vacuum and pressure gauge 30" vacuum, 100 lbs. sq. in. pressure	1	265562	
	Screw (2 B.A. x $\frac{3}{4}$" long) } Fixing	6	78139	
	Spring washer } gauges	6	3073	
	Nut (2 B A) } to panel	6	2247	
17	Oil temperature gauge	1	237826	
	Union for gauge	1	218512	
	Joint washer for union	1	3055	
	Lockwasher for union	1	217321	
	Washer for gauge	1	218751	
	Clip for oil temperature gauge pipe	8	41379	
	Drive screw fixing clip	8	72626	
	Clip fixing gauge pipe at rear of body	1	233274	
	Drive screw fixing clip	1	72626	
	Double-ended union for pressure gauge pipe	1	240053	
	Joint washer for union	1	6533	
	Pipe complete, pump to pressure gauge	1	240056	
	Adaptor for vacuum pipe	1	240052	
	Joint washer for adaptor	1	8680	
	Double-ended union, for vacuum gauge pipe	1	3057	
	Joint washer for union	1	2347	
18	Pipe complete, pump to vacuum pressure gauge	1	240054	
19	Water valve complete	3	240037	
	Rubber grommet for water valves	3	303663	
	Tee piece for hose reel pipe	1	240040	
20	Double-ended union } For water valves,	8	240041	
	Washer for union } pump and tank	8	8680	
21	Hydrant connection	1	240038	
22	Distance piece, connection to panel	1	240109	
	Distance piece, connection to water valve	2	240110	
	Joint washer for hydrant	2	8680	
23	Pipe complete, tee piece to hose reel	1	237921	
	Pipe complete, hydrant valve and outlet valve to tee piece	2	240046	
24	Pipe complete, outlet valve to pump	1	237924	
25	Pipe complete, pump to inlet valve	1	237923	
	Pipe complete, inlet valve to tank	1	237922	

FIRE TENDER

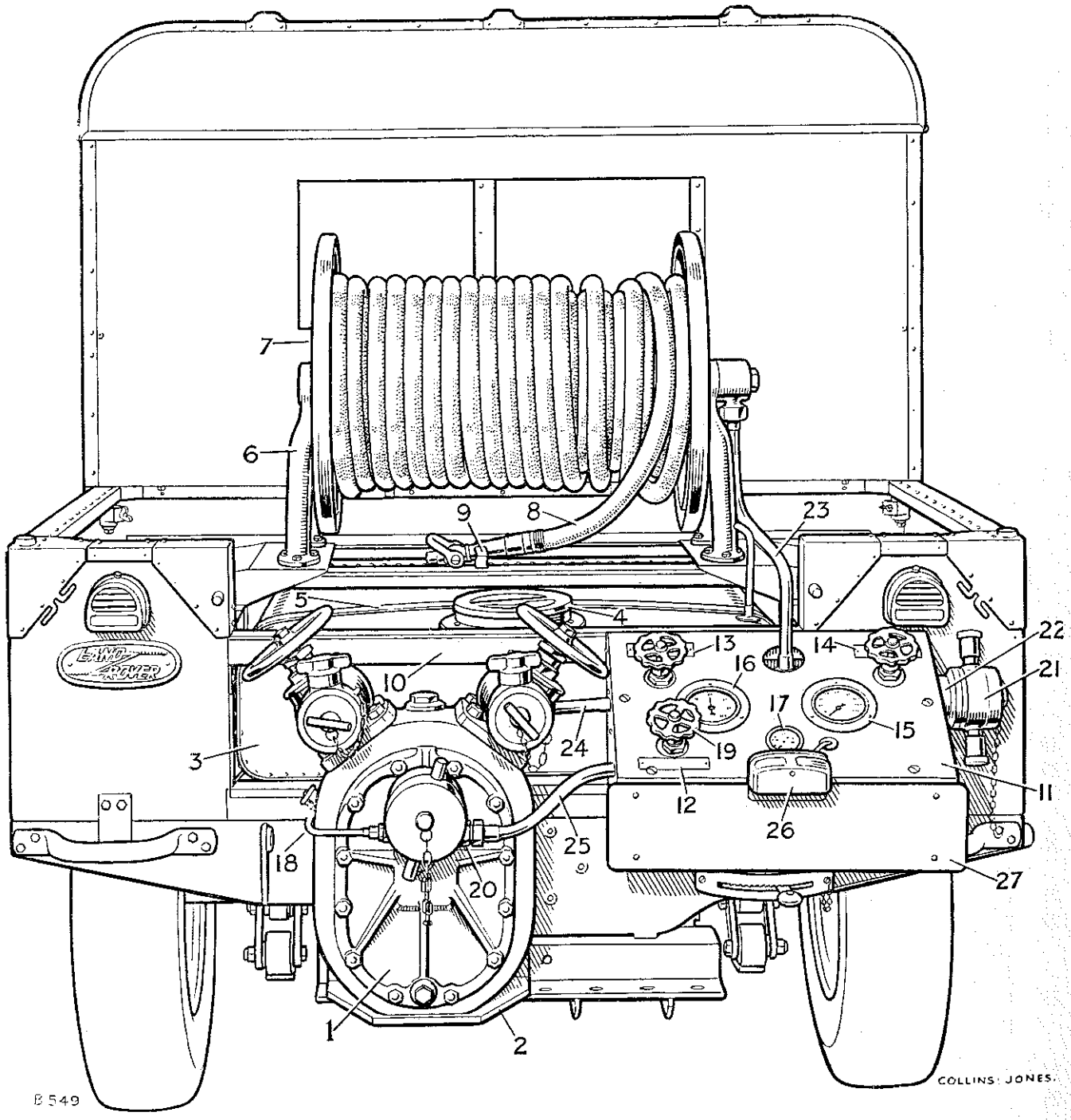
1
2
3
4
5
6
7
8
9
10
11
12
13
14
15
16
17
18
19
20
21
22
23
24
25
26
27
B 549
COLLINS: JONES.

FIRE TENDER

PLATE REF. 1 2 3 4	DESCRIPTION	Qty.	Part No.	REMARKS
	Support bracket for governor quadrant	1	237549	
	Adaptor for governor control cable	1	237812	
	Ball joint complete	1	219065	
	Locknut ($\frac{1}{4}$") for ball joint	1	2823	
	Control cable for engine governor	1	233092	
	Swivel (For control cable)	1	233094	
	Bracket (For control cable)	1	233100	
	Washer (For control cable)	1	233017	
	Nut (For control cable)	1	250407	
	Nipple (For control cable)	1	233093	
	Split pin (For control cable)	1	2388	
	Conduit for control cable, governor to connector	1	233103	
	Conduit for control cable, connector to connector	1	233102	
	Conduit for control cable, connector to swivel	1	233101	
	Clamp connector for conduit	2	237817	
	Bracket for conduit clip at engine	1	237819	
	Clip for conduit	5	237813	
	Drive screw fixing clips	5	72626	
	Nipple, conduit to control cable and swivel	2	233093	
	Swivel coupling for control	1	237815	
	Drive screw fixing swivel to frame	2	73892	
	Carrier bracket for overdrive gearbox	1	237643	
	Bolt ($\frac{5}{16}$" x 5$\frac{5}{16}$" long) (Fixing carrier bracket to chassis frame)	4	215207	
	Plain washer (Fixing carrier bracket to chassis frame)	4	2550	
	Spring washer (Fixing carrier bracket to chassis frame)	4	3075	
	Nut ($\frac{5}{16}$") (Fixing carrier bracket to chassis frame)	4	2828	
	Tube for overdrive gearbox mounting	4	219743	
	Link plate (Governor unloader)	1	242928	
	Bracket for lever (Governor unloader)	1	242891	
	Link for unloader spring	1	242927	
	Unloader spring for governor	1	218051	
	OVERDRIVE GEARBOX ASSEMBLY	1	237906	
	Housing, input half	1	242746	
	Housing, output half	1	242747	
	Joint washer for housing	1	242748	
	Bolt ($\frac{1}{4}$" x $\frac{7}{8}$" long) (Fixing main housing together)	6	237142	
	Spring washer (Fixing main housing together)	6	3074	
	Nut ($\frac{1}{4}$") (Fixing main housing together)	6	2823	
	Bush in input housing for shaft (dowelled)	1	242767	
	Oil filler and level plug	1	3291	
	Oil drain plug	1	242765	
	Washer for drain plug	1	242770	
	Ball ($\frac{1}{4}$") (For oil relief valve)	1	52459	
	Spring (For oil relief valve)	1	242763	
	Plunger (For oil relief valve)	1	242751	
	Plug (For oil relief valve)	1	242752	
	Washer for plug (For oil relief valve)	1	242749	
	Body (For oil pump)	1	242755	
	Plunger and roller assembly (For oil pump)	1	242753	
	Spring (For oil pump)	1	242764	
	Plug (For oil pump)	1	242750	
	Cheese head screw (Fixing oil pump body)	2	242776	
	Spring washer (Fixing oil pump body)	2	3072	
	Input shaft, complete with output shaft bearing	1	242762	

cardiagn.com

FIRE TENDER

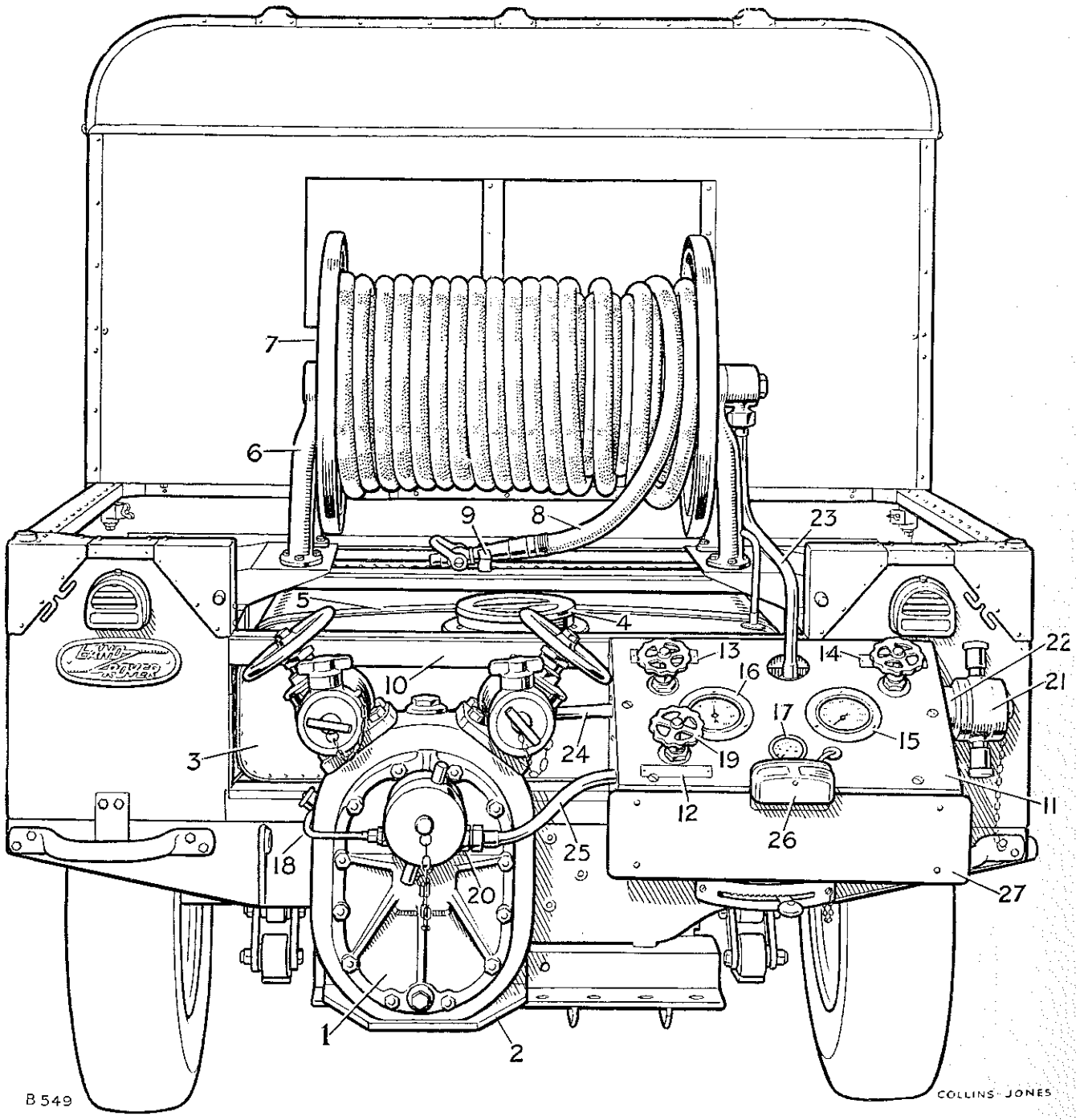

cardiagn.com

FIRE TENDER

PLATE REF. 1 2 3 4	DESCRIPTION	Qty.	Part No.	REMARKS
	Bearing for input shaft	1	242766	
	Oil seal for input shaft	1	242771	
	Circlip retaining input shaft	1	09128	
	Planet wheel, reaction, with bearing, small	3	242756	
	Sun wheel, driven, large	1	242757	
	Planet wheel, driven, with bearing, large	3	242759	
	Sun wheel, reaction, with bearing, small	1	242758	
	Retaining plate for planet wheels	1	242754	
	Planet wheel bearing shaft	6	242760	
	Plain washer } For planet	6	2210	
	Slotted nut (3/8" unified) } clamping	6	252046	
	Split pin } bolts	6	2556	
	Thrust washer, large } For driven	1	242768	
	Thrust washer, small } sun wheel	1	242769	
	Output shaft	1	242761	
	Oil seal for output shaft	1	242772	
	Circlip retaining output shaft	1	09203	
	Bolt (5/16" x 4" long) } Fixing overdrive	3	215194	
	Spring washer } gearbox to	3	3075	
	Nut (5/16") } carrier bracket	3	2828	
	Driving flange, input	1	237718	
	Driving flange, output	1	237543	
	Plain washer } Fixing flanges	2	3131	
	Slotted nut (1/2") } to gearbox	2	251604	
	Split pin } overdrive	2	2426	
	Propeller shaft, short, Centre P.T.O to overdrive	1	237533	
	Propeller shaft, long, Overdrive to pump	1	236398	
	Bolt (3/8" x 1 1/8" long) } Fixing	12	237341	
	Self-locking nut (3/8") } propeller shafts	12	50526	
	Fan for overdrive gearbox	1	239446	
	Bolt (3/8" x 1 1/2" long) } Fixing fan and	4	215330	
	Self-locking nut (3/8") } propeller shaft	4	50526	
	Heat shield for overdrive gearbox	1	238010	
	Saddle }	2	241575	
	Bolt (5/16" x 13/16" long) } Fixing heat shield	4	237160	
	Spring washer } to exhaust pipe	4	3075	
	Nut (5/16") }	4	3490	
	Bracket for front cradle	1	303662	
	Bolt (1/4" x 5/8" long) } Fixing	4	237140	
	Spring washer } bracket to	4	3074	
	Nut (1/4") } front bumper	4	2823	
	Front cradle	1	303644	
	Bolt (1/4" x 3/4" long) }	2	237141	
	Spring washer } Fixing cradle to bracket	2	3074	
	Nut (1/4") }	2	3819	
	Side cradle	2	303654	
	Bolt (1/4" x 5/8" long) } Fixing side cradle	14	237140	
	Spring washer } to	14	3074	
	Nut (1/4") } front wings	14	2823	
	Stiffener for front wing top	2	303658	
	Pop rivet fixing stiffener	6	300919	
	Support strap R.H. } For front	1	303648	
	Support strap L.H. } cradle	1	303649	

FIRE TENDER

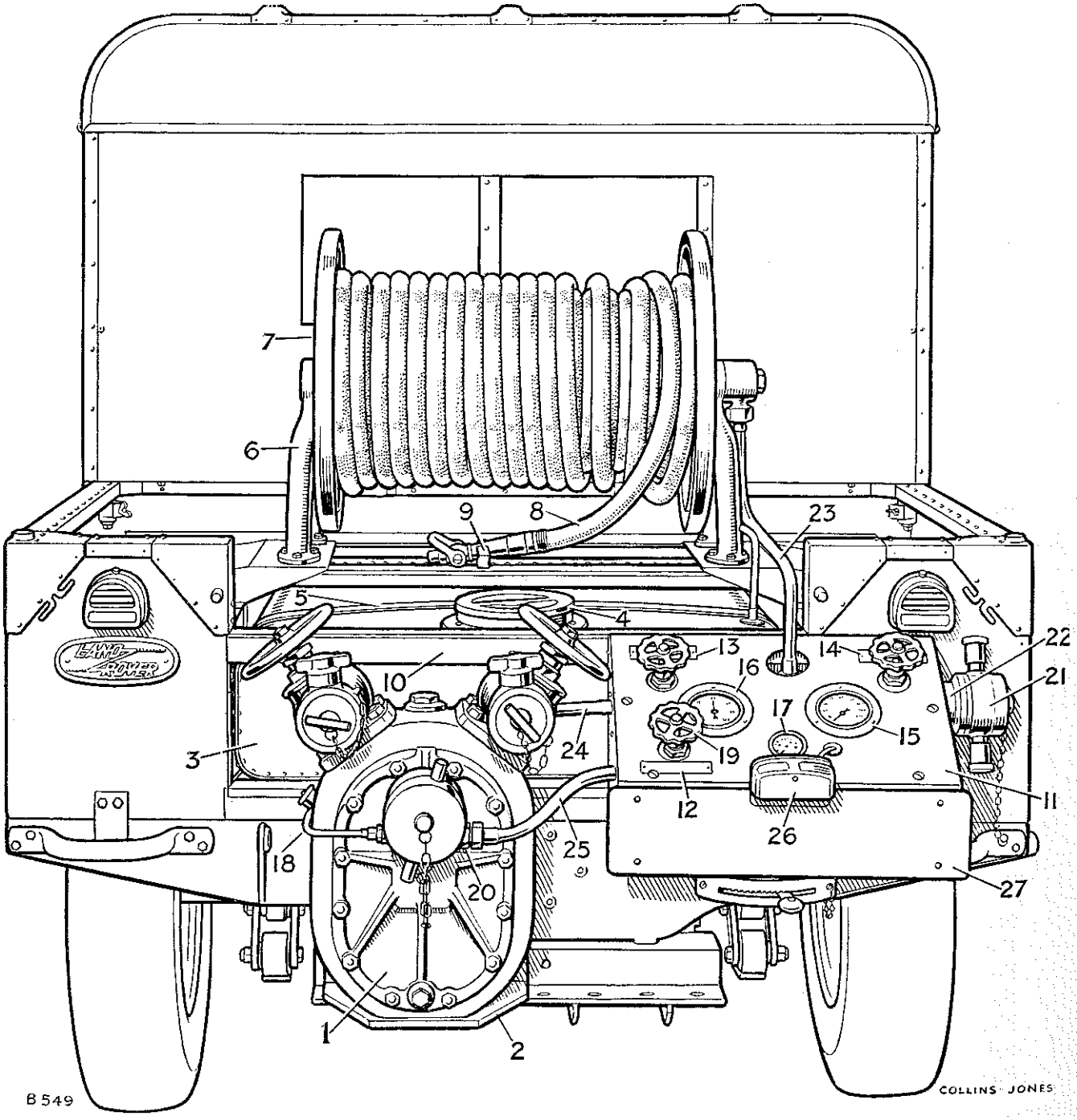

cardiagn.com

FIRE TENDER

PLATE REF. 1 2 3 4	DESCRIPTION		Qty.	Part No.	REMARKS
	Bolt ($\frac{1}{4}$" x $\frac{3}{4}$" long)	Fixing straps to cradle bracket	2	237141	
	Spring washer		2	3074	
	Nut ($\frac{1}{4}$")		2	3819	
	Strap for hose cradles		3	303650	
	Instantaneous buckle		3	303568	
	End cap		3	300954	
	Eyelet		3	300785	
	Rivet	Fixing straps to cradle	12	302186	
	Plain washer		12	3816	
	Clip for starting handle		1	05555	
	Screw (2 B.A. x $\frac{3}{8}$" long)	Fixing clip to body	1	77846	
	Spring washer		1	3073	
	Nut (2 B.A.)		1	2247	
26	Lamp for number plate		1	234213	R.H.D.
	Bulb for lamp		1	242491	
	Screw (2 B.A. x $\frac{3}{8}$" long)	Fixing lamp to plate	5	77846	
	Spring washer		5	3073	
	Nut (2 B.A.)		5	2247	
27	Rear number plate		1	303641	
	Harness for number plate		1	241742	
	Socket	For number plate harness	1	234117	
	Grommet		1	233244	
	Cable cleat		2	240429	
	Mechanical foam generator		1	241753	Supplied as extra equipment
	Pick-up tube for foam generator		1	241754	
	Foam nozzle		1	241755	
	Ring spanner		1	241980	Supplied with each pump
	Hose spanner		1	241981	
	Rear spring, driver's side		1	240327	
	Rear spring, passenger's side		1	240328	
	"U" bolt for rear spring		4	230732	
	Rear body floor		1	303635	
	Fixing plate for seat hinge, centre		2	303639	
	Pop rivet fixing plate to body		4	300919	

cardiagn.com

TRAILER, DRAWBAR AND HAND BRAKE

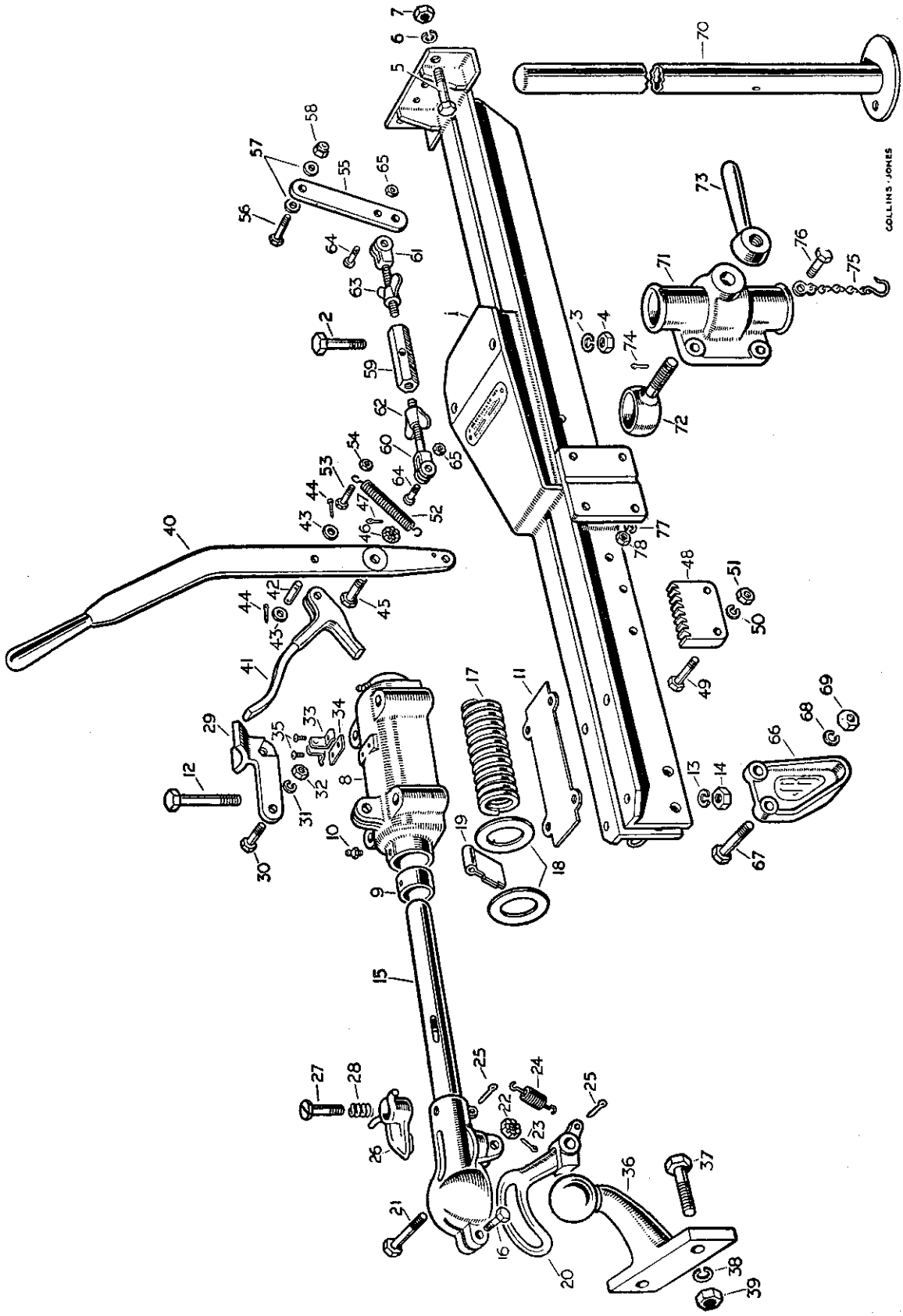

cardiagn.com

TRAILER, DRAWBAR AND HAND BRAKE

PLATE REF.	1 2 3 4	DESCRIPTION	Qty.	Part No.	REMARKS
		TRAILER COMPLETE ASSEMBLY	1	273247	
1		Drawbar frame	1	232248	
2		Bolt (½″ x 1½″ long) Fixing	2	250571	
3		Spring washer drawbar to	2	3078	
4		Nut (½″) body at front	2	2269	
5		Bolt (½″ x 1¼″ long) Fixing	2	215489	
6		Spring washer drawbar to	2	3078	
7		Nut (½″) body at rear	2	2269	
8		HOUSING ASSEMBLY FOR PULL PIN	1	232249	
9		Bush for housing	2	232250	
10		Grease nipple	2	219696	
11		Bottom plate for housing	1	232251	
12		Bolt (½″ x 3⅜″ long) Fixing housing	4	215510	
13		Spring washer and plate to	4	3078	
14		Nut (½″) drawbar frame	4	2269	
15		Pull pin	1	232252	
16		Pinch bolt (⅜″ x 1″ long) for pull pin cup	1	250539	
17		Over-run spring	1	232253	
18		Thrust washer for spring	2	232254	
19		Special split cotter, pull pin to housing	1	232255	
20		Locking handle for tow ball	1	232256	
21		Bolt (½″ x 2⅝″ long) Fixing	1	250576	
22		Castle nut (½″) locking handle	1	2451	
23		Split pin to pull pin	1	2425	
24		Spring, locking handle	1	232257	
25		Split pin fixing spring	2	3179	
26		Safety catch for locking handle	1	232258	
27		Special screw Fixing safety catch	1	232259	
28		Spring to pull pin	1	232260	
29		Reversing catch	1	232261	
30		Bolt (⅜″ x 1¼″ long) Fixing reversing	1	250541	
31		Spring washer catch to pull pin	1	3076	
32		Nut (⅜″) housing	1	2827	
33		Spring clip for reversing catch	2	232262	
34		Bottom plate for spring clips	1	232263	
35		Screw (3/16″ x ⅜″ long) fixing spring clips	2	75209	
36		Towing ball	1	232264	
37		Bolt (⅝″ x 2″ long) Fixing towing	2	250599	
38		Spring washer ball to	2	3080	
39		Nut (⅝″) chassis frame	2	219668	
40		Hand brake lever	1	232266	
41		Pawl for hand brake	1	232267	
42		Pin for hand brake pawl	1	232268	
43		Plain washer Fixing pin to	2	2210	
44		Split pin hand brake lever	2	2393	

cardiagn.com

TRAILER, DRAWBAR AND HAND BRAKE

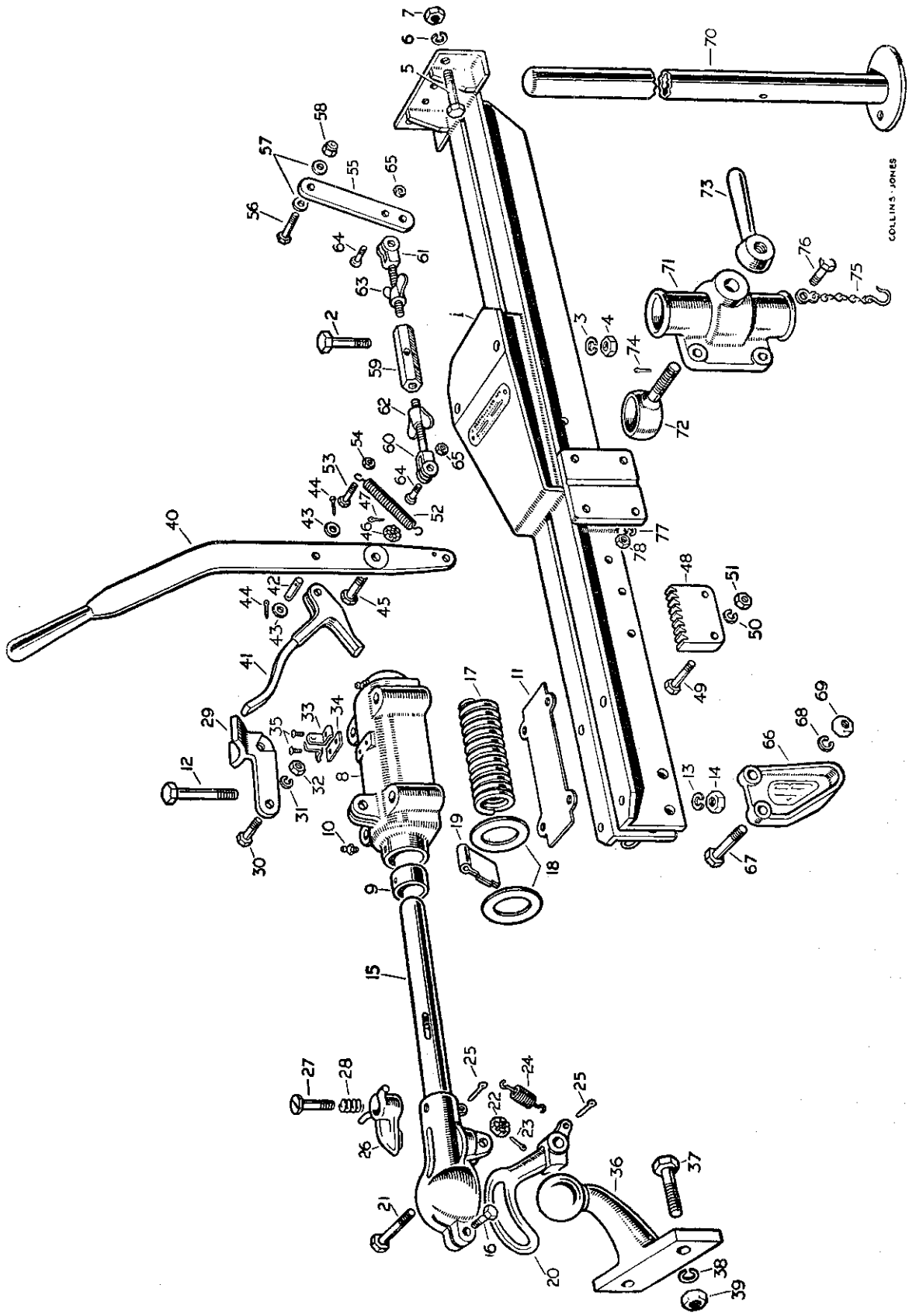

cardiagn.com

TRAILER, DRAWBAR AND HAND BRAKE

PLATE REF.	1 2 3 4 DESCRIPTION		Qty.	Part No.	REMARKS
45	Bolt ($\frac{7}{16}''$ x $1\frac{3}{4}''$ long)	Fixing hand brake lever to drawbar	1	250559	
46	Castle nut ($\frac{7}{16}''$)		1	2454	
47	Split pin		1	2393	
48	Ratchet for hand brake		1	232269	
49	Bolt ($\frac{3}{8}''$ x $1\frac{3}{4}''$ long)	Fixing ratchet to drawbar	2	250544	
50	Spring washer		2	3076	
51	Nut ($\frac{3}{8}''$)		2	2827	
52	Pull-off spring for hand brake		1	232270	
53	Bolt ($\frac{1}{4}''$ x $1\frac{1}{2}''$ long)	Fixing spring to drawbar	1	250517	
54	Nut ($\frac{1}{4}''$)		1	2823	
55	Swinging link for hand brake		1	232271	
56	Bolt ($\frac{3}{8}''$ x $1\frac{3}{4}''$ long)	Fixing link to drawbar	2	250544	
57	Packing washer		2	232272	
58	Self-locking nut ($\frac{3}{8}''$)		2	50526	
59	Brake adjuster		1	232273	
60	Jaw, R.H. thread	For brake adjuster	1	232274	
61	Jaw, L.H. thread		1	232275	
62	Wing nut R.H. thread		1	232276	
63	Wing nut L.H. thread		1	232277	
64	Special screw	Fixing jaws to hand brake lever and swinging link	2	232278	
65	Nut ($\frac{5}{16}''$)		2	2828	
66	Front protecting foot		1	232279	
67	Bolt ($\frac{1}{2}''$ x 2'' long)	Fixing foot to drawbar	2	250573	
68	Spring washer		2	3078	
69	Nut ($\frac{1}{2}''$)		2	2269	
70	Supporting leg		1	232280	
71	Bracket for leg		1	232281	
72	Locking ring for leg		1	232282	
73	Handle, locking leg in bracket		1	232283	
74	Split pin, retaining handle		1	2397	
75	Retaining chain for leg		1	232284	
76	Bolt ($\frac{3}{8}''$ x $1\frac{1}{4}''$ long)	Fixing bracket and retaining chain to drawbar	4	250541	
77	Spring washer		4	3076	
78	Nut ($\frac{3}{8}''$)		4	2827	

cardiagn.com

TRAILER, AXLE, BRAKES AND HUBS

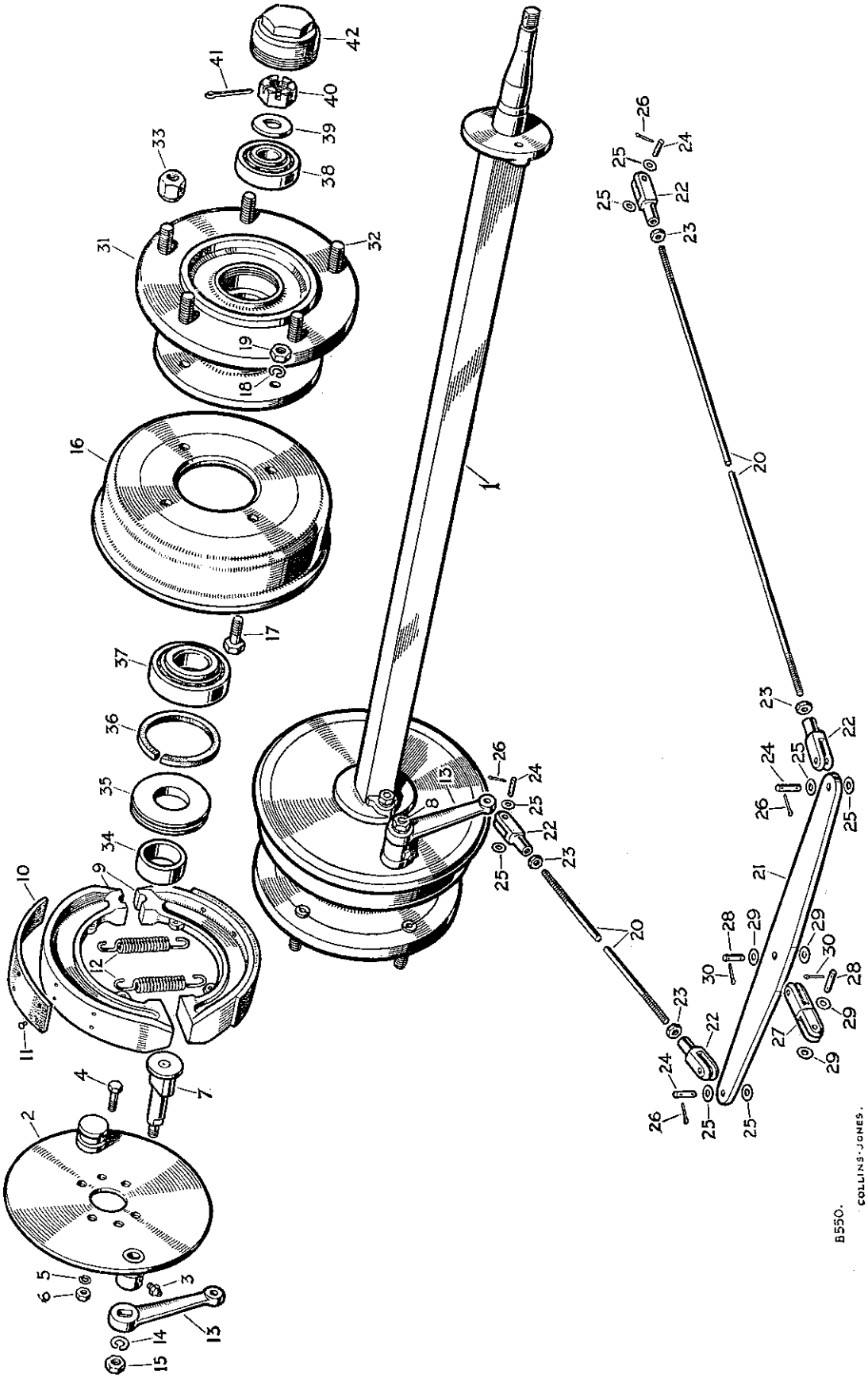

cardiagn.com

TRAILER, AXLE, BRAKES AND HUBS

PLATE REF.	1 2 3 4 DESCRIPTION	Qty.	Part No.	REMARKS
1	Axle complete	1	232285	
2	Anchor plate complete	2	232286	Up to Trailer No. BT8-9301
	Anchor plate	2	262973	Trailer No BT8-9302 onwards
3	Grease nipple for brake cam	2	232287	
4	Bolt (3/8" x 1 1/8" long) } Fixing anchor	4	215272	
5	Spring washer } plate to axle	4	3076	
6	Nut (3/8") } flange	4	2827	
7	Operating cam for brake shoe L.H	1	232288	Up to Trailer No BT8-9301
8	Operating cam for brake shoe R.H.	1	232289	
	Operating cam for brake shoe L.H.	1	262974	Trailer No. BT8-9302 onwards
	Operating cam for brake shoe R.H.	1	262975	
9	BRAKE SHOE ASSEMBLY	4	232290	Up to Trailer No BT8-9301
	BRAKE SHOE ASSEMBLY	4	262976	Trailer No. BT8-9302 onwards
10	Lining for brake shoe	4	232291	
11	Rivet for lining	32	232292	
12	Pull-off spring for brake shoe	4	232293	Up to Trailer No. BT8-9301
	Pull-off spring for brake shoe	4	262977	Trailer No. BT8-9302 onwards
13	Operating lever for brake shoe	2	232294	Up to Trailer No. BT8-9301
	Operating lever for brake shoe	2	262978	Trailer No. BT8-9302 onwards
14	Spring washer } Fixing lever	2	2299	
15	Special locknut } to cam	2	232295	
16	Brake drum	2	232296	
17	Bolt (3/8" x 1 1/8" long) } Fixing	8	215272	
18	Spring washer } brake drum	8	3076	
19	Nut (3/8") } to hub	8	2827	
20	Brake rod	2	232297	
21	Compensating bar for brake linkage	1	232298	
22	Jaw for brake rod	4	232299	
23	Locknut (5/16") for jaw } Fixing brake	4	2828	
24	Pin } rods to operating	4	232300	
25	Plain washer } levers and	8	2550	
26	Split pin } compensating bar	8	2393	
27	Double-ended jaw	1	232301	
28	Pin } Fixing double-ended jaw	2	232300	
29	Plain washer } to compensating bar	4	2550	
30	Split pin } and swinging link	4	2393	
31	HUB ASSEMBLY FOR ROAD WHEEL	2	232303	
32	Stud for road wheel	10	217360	
33	Nut for road wheel	10	217361	
34	Distance piece for hub	2	232304	
35	Retainer for oil seal	2	232305	
36	Oil seal for hub	2	232306	
37	Roller bearing, inner	2	03573	
38	Roller bearing, outer	2	03572	
39	Special washer for hub	2	232307	
40	Castle nut (5/8") } Fixing hub	2	3259	
41	Split pin } to axle	2	2426	
42	Hub cap	2	232308	

cardiagn.com

TRAILER, BODY, SPRINGS AND ROAD WHEELS

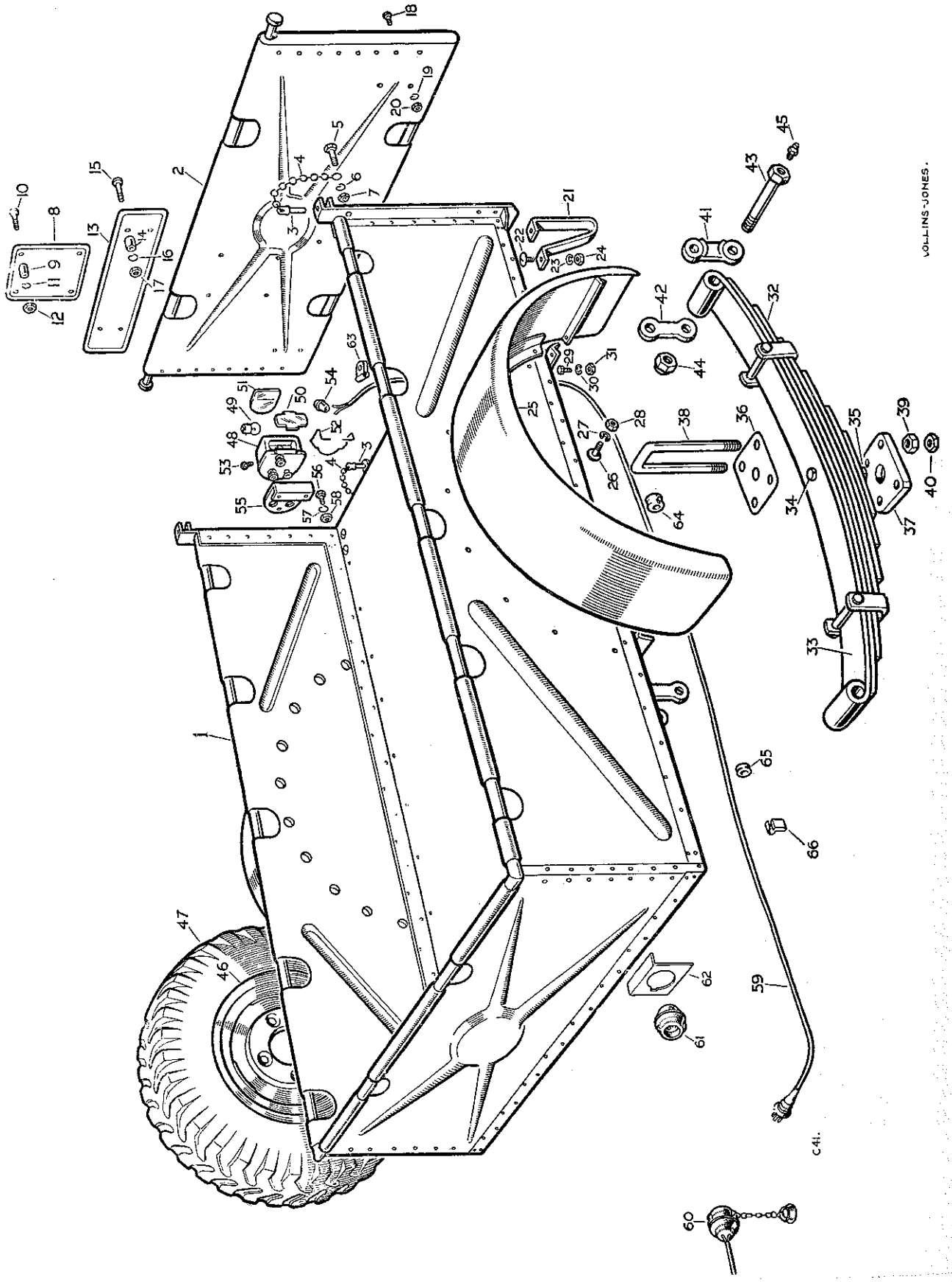

cardiagn.com

TRAILER, BODY, SPRINGS AND ROAD WHEELS

PLATE REF.	1 2 3 4 DESCRIPTION	Qty.	Part No.	REMARKS
	BODY ASSEMBLY	1	232309	
1	Body complete	1	232310	
2	Tailboard complete	1	232311	
3	Pin securing tailboard	4	232312	
4	Chain for hinge pin	4	232313	
5	Bolt (¼" x ¾" long) } Fixing chains to body	4	215054	
6	Spring washer } Fixing chains to body	4	3074	
7	Nut (¼") } Fixing chains to body	4	2823	
8	Trailer plate	1	267999	
9	Distance piece for plate	4	232315	
10	Screw (¼" x 1" long) } Fixing plate to tailboard	4	69215	
11	Spring washer } Fixing plate to tailboard	4	3074	
12	Nut (¼") } Fixing plate to tailboard	4	2823	
13	Registration plate	1	232316	
14	Distance piece for plate	4	232315	
15	Screw (¼" x 1" long) } Fixing registration plate to tailboard	4	69215	
16	Spring washer } Fixing registration plate to tailboard	4	3074	
17	Nut (¼") } Fixing registration plate to tailboard	4	2823	
18	Screw (¼" x ½" long) } For redundant holes in tailboard	2	69214	
19	Spring washer } For redundant holes in tailboard	2	3074	
20	Nut (¼") } For redundant holes in tailboard	2	2823	
21	Rear stand	2	232317	
22	Special bolt } Fixing stand to body	4	232318	
23	Spring washer } Fixing stand to body	4	3076	
24	Nut (⅜" Whit.) } Fixing stand to body	4	232319	
25	Wing complete	2	232320	
26	Special bolt } Fixing wing to body panel	20	232321	
27	Spring washer } Fixing wing to body panel	20	3074	
28	Nut (¼" Whit.) } Fixing wing to body panel	20	2267	
29	Bolt (¼" x ¾" long) } Fixing wing to angle piece	4	215054	
30	Spring washer } Fixing wing to angle piece	4	3074	
31	Nut (¼") } Fixing wing to angle piece	4	2823	
32	Road spring complete	2	232322	
33	Main leaf for spring	2	232323	
34	Centre bolt for spring	2	232324	
35	Nut (⅜") for centre bolt	2	2827	
36	Top plate for spring	2	232325	
37	Bottom plate for spring	2	232326	
38	"U" bolt for spring	4	232327	
39	Nut (½") for "U" bolt	8	2269	
40	Locknut (½") for "U" bolt	8	3237	
41	Spring shackle, shouldered	2	232328	
42	Spring shackle, plain	2	232329	
43	Shackle pin	6	232330	
44	Castle nut (½") for shackle pin	6	2451	
	Split pin for nut	6	2426	
45	Grease nipple for shackle pin	6	219696	

cardiagn.com

TRAILER, BODY, SPRINGS AND ROAD WHEELS

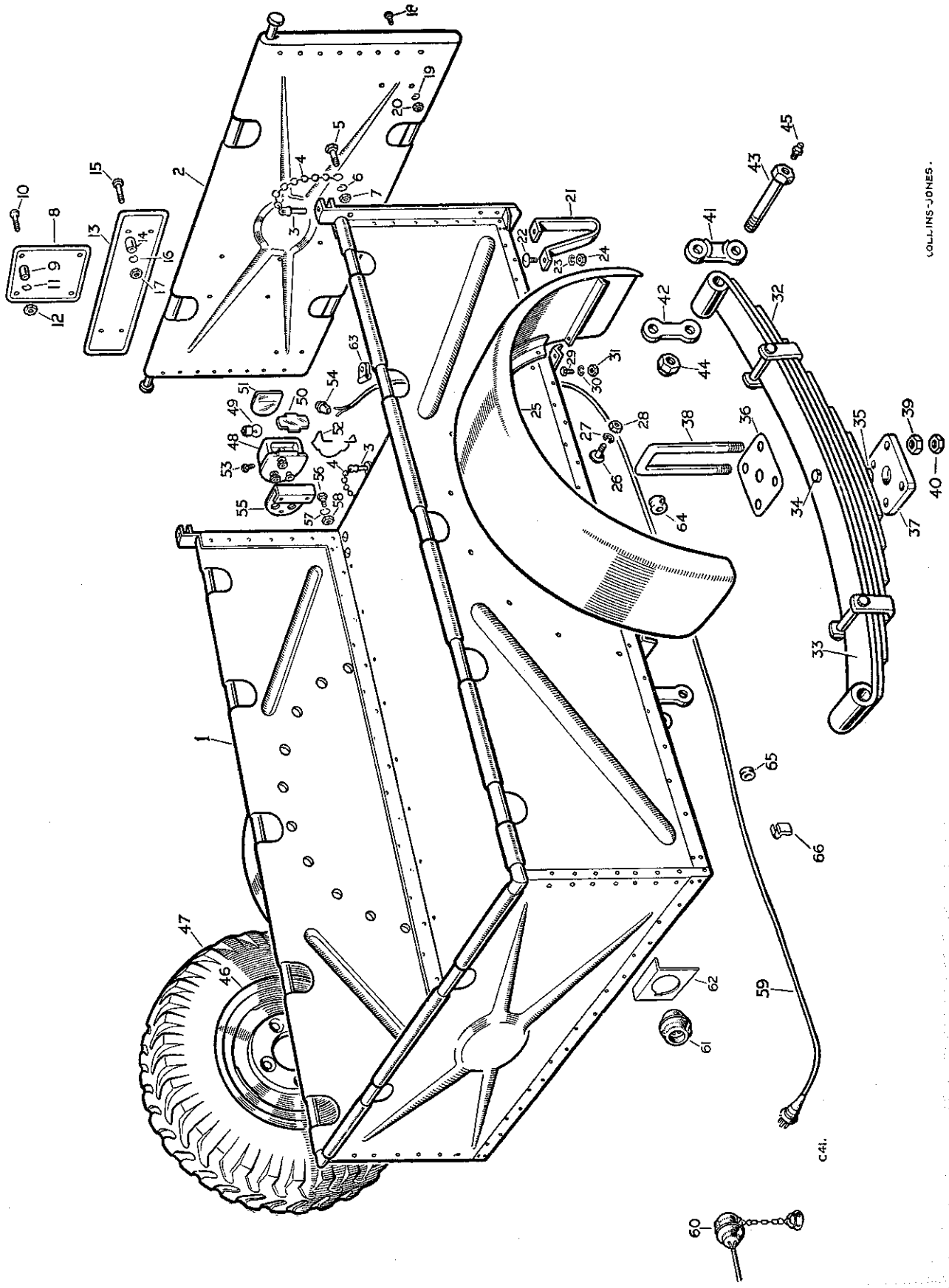

TRAILER, BODY, SPRINGS AND ROAD WHEELS

PLATE REF.	1 2 3 4 DESCRIPTION	Qty.	Part No.	REMARKS
46	Road wheel	2	231601	
47	Tyre, 6 00 x 16″	2	218239	
	Inner tube, 6.00 x 16″	2	218240	
	Rim band for wheel	2	232053	
48	Stop, tail lamp	1	217618	
49	Bulb (12v. 6w.) for stop, tail lamp	2	10211	
50	Glass for number plate illumination, white	1	261500	
51	Glass for stop and tail lamp, red	1	260039	
52	Spring retaining glasses	1	261499	
53	Special screw fixing body	1	261501	
54	Rubber grommet for tail lamp wire	1	232331	
55	Bracket for stop, tail lamp	1	232332	
56	Bolt (¼″ x ¾″ long) } Fixing bracket to body	2	215054	
57	Spring washer } Fixing bracket to body	2	3074	
58	Nut (¼″) } Fixing bracket to body	2	2823	
59	Socket and cable for tail lamp	1	230441	
60	Cable clip for tail lamp cable	1	232333	
61	Dummy plug for cable	1	261511	
	Screw (4 B.A. x ½″ long) } Fixing dummy plug to drawbar	4	77899	
	Spring washer } Fixing dummy plug to drawbar	4	3072	
	Nut (4 B A.) } Fixing dummy plug to drawbar	4	61640	
64	Rubber grommet, large, for cable	1	232334	
65	Rubber grommet, small, for cable	1	232335	
66	Spring cable clips for cable	2	232336	
	Cover complete for trailer	1	261827	

cardiagn.com

NUMERICAL INDEX

This list, in part number numerical order, gives the page on which the item will be found.

Part No.	Page No.
1643	23
1659	39
2219	29
2247	37
2249	57
2251	45
2267	85
2269	79
2299	83
2337	49
2338	49
2347	71
2388	55
2392	35
2393	79
2397	81
2422	51
2425	79
2426	75
2428	23
2451	79
2454	81
2550	45
2555	51
2556	51
2823	37
2827	23
2828	23
2851	117
3005	64
3008	63
3050	45
3055	53
3057	71
3073	13
3075	11
3076	23
3078	41
3080	61
3088	29
3131	75
3179	79
3237	85
3259	23
3280	62
3291	73
3292	29
3299	69
3300	23
3490	11
3547	9
3551	35
3610	29
3662	35
3665	35
3685	37
3764	23
3816	13
3819	11
3821	57
3823	13
3830	11
3836	61
3840	11
3841	17
3851	55
3852	15
3863	55
3864	55
3865	57
3887	65
3898	15
3899	11
3901	13
3931	64
3988	69
6533	71
8060	41
8680	71
8885	62
03572	83
03573	83
06717	23
06718	23
09067	64
09128	73
09203	75
09225	51
09553	111
09561	41
10713	59
12374	65
27341	7
41050	23
41131	23
41379	59
42431	29
43023	27
50183	62
50306	53
50473	43
50525	35
50526	27
50531	61
50690	49
50693	65
52181	64
52182	64
52189	64
52459	73
52710	51
55714	23
55742	45
55778	27
55779	25
59050	64
61640	87
64357	69
67762	62
69214	85
69215	85
70742	53
70884	37
71082	15
71164	49
72626	9
73353	35
73892	73
74236	19
75209	79
75263	53
75298	53
75805	109
76480	62
76833	71
77699	17
77700	13
77704	15
77707	19
77758	13
77789	55
77845	62
77846	77
77869	15
77892	63
77899	87
77926	59
77927	19
77932	11
77936	71
77954	17
77993	62
78002	13
78003	11
78005	13
78102	15
78139	71
211382	45
212023	59
212103	31
212104	41
212309	51
212373	51
212379	53
212943	47
213275	53
213276	53
213646	64
213724	53
213960	25
213961	53
214054	27
214264	53
214290	23
214795	23
214871	27
214991	51
214992	51
214994	51
214995	51
214996	51
214997	51
215054	85
215055	59
215056	35
215181	51
215194	75
215207	45
215272	47
215328	23
215330	75
215332	25
215338	29
215342	29
215366	29
215370	29
215489	79
215510	79
215594	25
215703	69
215755	62
215758	29
215767	41
215769	29
215809	45
216708	49
216986	23
217321	59
217325	23
217360	83
217361	83
217478	23
217497	23
217504	27
217505	31
217506	31
217507	31
217508	27
217522	23
217523	23
217525	23
217546	23
217548	27
217553	27
217554	27
217555	27
217556	31
217557	31
217558	31
217560	33
217562	27
217565	27
217566	27
217567	31
217573	27
217584	23
217618	87
217647	33
217650	31
217651	31
217652	31
217653	31
217654	31
217656	31
217657	31
217658	31
217659	29
217660	29
217661	27
217662	27
217663	27
217664	27
217665	27
217667	27
217668	31
217669	31
217670	31
217675	31
217680	23
217681	23
217763	23
217769	23
217773	23
217774	25
217972	23
218050	23
218171	23
218239	87
218240	87
218353	27
218354	31
218512	59
218549	45
218552	57
218563	37
218584	45
218602	35
218605	45
218653	45
218751	59
218827	35
218841	31
218842	31
218843	31
218844	31
218846	31
218907	45
219062	43
219065	37
219074	45
219075	45
219080	45
219083	43
219087	43
219088	43
219089	41
219090	43
219093	45
219101	45
219103	45

cardiagn.com

Part No.	Page No.
219104	45
219108	45
219113	43
219115	41
219116	43
219117	43
219118	43
219119	43
219120	45
219125	41
219138	35
219161	41
219179	43
219214	47
219237	47
219241	47
219242	35
219463	37
219464	37
219498	39
219503	37
219508	35
219511	35
219512	35
219557	45
219558	47
219559	45
219560	35
219561	45
219562	45
219564	41
219576	47
219577	47
219601	45
219622	43
219623	43
219624	43
219644	35
219658	35
219659	35
219665	61
219666	61
219667	61
219668	61
219669	61
219673	37
219675	37
219679	62
219684	61
219685	61
219686	61
219691	43
219696	27
219703	43
219742	41
219743	47
219744	23
219793	45
219794	47
219795	47
219796	47
219860	23
219880	29
219995	25
230024	29
230027	29
230028	29
230047	61
230095	31
230098	27
230122	29
230123	61
230140	25
230176	27
230177	31
230280	62
230288	27
230325	61
230441	87
230507	41
230577	62
230578	62
230579	62
230693	23
230732	62
230855	23
231201	21
231202	21
231203	21
231213	61
231214	61
231261	35
231282	63
231308	31
231309	31
231310	31
231356	35
231409	62
231429	62
231430	62
231432	27
231451	35
231452	35
231498	61
231507	23
231553	65
231577	49
231588	63
231601	87
231625	37
231636	25
231688	61
231699	61
231701	41
231702	41
231706	41
231709	41
231710	41
231711	61
231804	61
231832	53
231833	53
231835	53
231837	53
231853	23
232037	29
232039	59
232042	49
232123	62
232124	62
232125	41
232126	62
232141	49
232142	49
232143	49
232144	49
232145	49
232180	49
232181	49
232182	51
232212	49
232230	41
232231	49
232244	51
232245	51
232248	79
232249	79
232250	79
232251	79
232252	79
232253	79
232254	79
232255	79
232256	79
232257	79
232258	79
232259	79
232260	79
232261	79
232262	79
232263	79
232264	79
232266	79
232267	79
232268	79
232269	81
232270	81
232271	81
232272	81
232273	81
232274	81
232275	81
232276	81
232277	81
232278	81
232279	81
232280	81
232281	81
232282	81
232283	81
232284	81
232285	83
232286	83
232287	83
232288	83
232289	83
232290	83
232291	83
232292	83
232293	83
232294	83
232295	83
232296	83
232297	83
232298	83
232299	83
232300	83
232301	83
232303	83
232304	83
232305	83
232306	83
232308	83
232309	85
232310	85
232311	85
232312	85
232313	85
232315	85
232316	85
232317	85
232318	85
232319	85
232320	85
232321	85
232322	85
232323	85
232324	85
232325	85
232326	85
232327	85
232328	85
232329	85
232330	85
232331	87
232332	87
232333	87
232334	87
232335	87
232336	87
232339	49
232341	49
232344	49
232346	49
232349	49
232350	51
232351	49
232409	31
232410	31
232557	27
232610	35
232646	69
232688	19
232720	60
232955	37
232960	31
232974	55
232990	65
232991	65
233017	73
233041	62
233042	62
233068	59
233071	59
233083	73
233092	73
233093	73
233094	73
233100	73
233101	73
233102	73
233103	73
233274	71
233324	41
233377	31
233417	62
233444	64
233460	64
233480	59
233803	37
233828	61
233988	61
233989	61
234059	59
234117	77
234199	35
234213	77
234288	64
234297	51
234307	51
234310	64
234370	43
234402	47
234440	11
234441	11
234532	27
234603	37
234662	61
234807	43
234809	43
234838	51
234894	39
235070	62
235237	23
235239	23
235240	23
235241	23
235253	23
235268	61
235564	64
235567	64
235568	64
235569	64
235570	64
235646	43
235647	43
235648	43
235652	43
235696	64
236007	59
236074	23
236154	19
236301	27
236398	75
236417	23
236510	45
236511	45
236514	39
236519	39
236520	39
236543	23
236548	23
236623	37
236624	39
237006	39
237139	31
237140	17
237141	13
237142	73
237143	37
237144	69
237158	35
237159	23

cardiagn.com

Part No.	Page No.
237160	11
237161	17
237178	69
237180	69
237195	61
237252	62
237255	65
237341	75
237348	69
237421	65
237521	65
237533	75
237543	75
237549	73
237551	69
237643	73
237718	75
237812	73
237813	73
237815	73
237817	73
237819	73
237826	71
237856	69
237906	73
237921	71
237922	71
237923	71
237924	71
238010	75
238348	57
239061	65
239420	65
239429	75
239446	75
239821	39
239906	69
240034	71
240035	71
240036	71
240037	71
240038	71
240040	71
240041	71
240046	71
240052	71
240053	71
240054	71
240056	71
240109	71
240110	71
240138	65
240195	37
240327	77
240328	77
240429	77
240730	59
240909	63
240964	61
241156	51
241575	75
241742	77
241753	77
241754	77
241755	77
241980	77
241981	77

Part No.	Page No.
242398	51
242399	51
242491	77
242522	27
242677	63
242678	63
242679	63
242680	63
242746	73
242747	73
242748	73
242749	73
242750	73
242751	73
242752	73
242753	73
242754	75
242755	73
242756	75
242757	75
242758	75
242759	75
242760	75
242761	75
242762	73
242763	73
242764	73
242765	73
242766	73
242767	73
242768	75
242769	75
242770	73
242771	73
242772	75
242776	73
243234	69
243547	59
244440	37
245654	51
250407	73
250517	81
250530	45
250539	47
250544	81
250559	81
250571	79
250573	81
250576	79
250599	79
250959	43
251322	25
251600	64
251601	51
251602	51
251604	75
252046	75
260836	53
261407	65
261428	27
261499	87
261500	87
261501	87
261503	65
261504	65
261511	87
261515	35

Part No	Page No.
261517	35
261518	35
261561	35
261573	35
261574	35
261575	35
261826	9
261827	87
261828	62
261829	59
261835	21
261836	65
261837	65
261838	49
261844	65
261881	51
261965	65
261968	7
262102	65
262104	49
262152	59
262206	7
262234	64
262244	64
262247	64
262249	65
262250	65
262251	65
262252	65
262253	65
262254	65
262315	17
262338	15
262344	17
262468	27
262469	27
262642	65
262648	62
262649	62
262660	35
262671	63
262680	53
262681	53
262728	35
262729	35
262779	7
262798	13
262816	64
262817	64
262818	64
262819	64
262820	64
262821	63
262822	64
262823	63
262832	63
262833	63
262834	63
262835	63
262836	63
262837	64
262911	93
262973	83
262974	83
262975	83
262976	83
262977	83

Part No.	Page No.
262978	83
263509	35
263093	53
263356	45
265087	59
265561	71
265662	71
267999	85
269162	45
269163	43
273247	79
274895	65
300748	63
300752	63
300782	57
300783	63
300785	7
300919	15
300924	9
300951	7
300953	7
300954	7
300961	9
301005	7
301007	7
301013	7
301027	9
301035	9
301074	9
301077	9
301119	9
301120	9
301133	7
301134	7
301135	7
301136	9
301206	62
301254	63
301255	63
301274	63
301275	63
301279	7
301280	7
301295	65
301298	53
301309	7
301317	7
301318	7
301320	7
301321	7
301323	9
301324	9
301330	9
301331	9
301332	7
301342	9
301343	9
301346	39
301438	55
301446	55
301453	55
301456	55
301457	55
301469	57

Part No	Page No.
301470	57
301476	57
301488	57
301489	57
301494	57
301498	57
301500	57
301502	57
301883	7
301890	7
301892	9
301924	55
301925	7
301929	62
302068	11
302069	11
302070	11
302072	11
302093	11
302115	11
302123	11
302124	11
302125	11
302126	13
302127	11
302128	11
302129	13
302130	11
302131	11
302132	11
302148	15
302154	11
302155	13
302157	13
302158	13
302164	13
302165	13
302167	11
302170	13
302173	15
302174	13
302175	15
302176	15
302177	13
302178	13
302184	15
302186	77
302187	15
302188	15
302198	15
302207	13
302208	11
302213	11
302214	11
302215	11
302216	11
302223	13
302244	15
302249	19
302254	13
302255	13
302258	13
302259	13
302260	13
302262	13
302283	17

cardiagn.com

Page No.
57
57
57
57
57
57
57
57
7
7
9
55
7
62
11
11
11
11
11
11
11
11
11
13
11
11
13
11
11
11
15
11
13
13
13
13
13
11
13
15
13
15
15
13
13
15
77
15
15
15
13
11
11
11
11
11
13
15
19
13
13
13
13
13
13
17

Part No.	Page No.
302286	19
302291	17
302292	17
302293	17
302364	15
302371	15
302372	15
302373	15
302375	64
302376	64
302377	64
302378	64
302384	63
302385	63
302386	64
302387	64
302388	64
302389	64
302390	64
302391	64
302392	64
302403	64
302434	7
302441	17
302444	17
302445	19
302447	19
302450	19
302451	19
302452	19
302453	19
302454	19
302458	17
302526	65
302569	62
302570	62
302647	57
302648	57
302655	57
302667	69
302671	53
302672	53
302673	55
302674	55
302675	55
302676	55
302677	55
302678	53
302679	55
303568	77
303605	69
303609	69
303610	69
303611	69
303612	69
303618	69
303619	69
303625	69
303626	71
303628	71
303632	69
303635	77
303639	77
303641	77
303644	75
303648	75
303649	75

Part No.	Page No.
303650	77
303654	75
303658	75
303661	69
303662	75
303663	71
304001	9
304021	19
304087	7
304088	7
304089	7
304098	53
304099	53
304198	9
304352	57
304353	57
304475	63
304476	63
304977	19
305161	7
305533	53
306461	13
306493	13
306532	13
306861	9
306862	9
307358	19
311225	93
311376	7
311436	69
311597	13
311922	75
311923	75
313493	13
320046	13
320047	13

Part No.	Page No.

Part No.	Page No.

Part No.	Page No.

cardiagn.com

ISBN 1 85520 1194

COPYRIGHT LAND ROVER PARTS LTD.

ISSUED AND PRINTED BY BROOKLANDS BOOKS LTD
PO BOX 146, COBHAM, SURREY, KT11 1LG ENGLAND
WITH THE KIND PERMISSION OF
LAND ROVER PARTS LTD. PO BOX 333
BICKENHILL LANE BIRMINGHAM B37 7AQ
ENGLAND

cardiagn.com

cardiagn.com

LAND ROVER

REGISTERED TRADE MARK

cardiagn.com

ISBN 1 85520 1194